PUBLIC HEALTH DEPARTMENT[641]

Rules of divisions under this department "umbrella" include Professional Licensure[645], Dental Board[650], Medical Board[653], Nursing Board[655] and Pharmacy Board[657]

CHAPTER 1
REPORTABLE DISEASES, POISONINGS AND CONDITIONS, AND QUARANTINE AND ISOLATION

1.1(139A) Definitions
1.2(139A) Purpose and authority

REPORTABLE COMMUNICABLE AND INFECTIOUS DISEASES

1.3(139A,141A) Reportable communicable and infectious diseases
1.4(135,139A) Reporting of reportable communicable and infectious diseases

REPORTABLE POISONINGS AND CONDITIONS—NONCOMMUNICABLE

1.5(139A,135) Reportable poisonings and conditions
1.6(135,139A) Reporting poisonings and conditions

INVESTIGATION

1.7(135,139A) Investigation of reportable diseases

ISOLATION AND QUARANTINE

1.8(139A) Isolation and quarantine
1.9(135,139A) Quarantine and isolation
1.10 and 1.11 Reserved
1.12(135,137,139A) Quarantine and isolation—model rule for local boards
1.13(135,139A) Area quarantine

SPECIFIC NONCOMMUNICABLE CONDITIONS

1.14(139A) Cancer
1.15(144) Congenital and inherited disorders
1.16(139A) Agriculturally related injury

CONFIDENTIALITY

1.17(139A,22) Confidentiality

CHAPTER 2
HEPATITIS PROGRAMS

VIRAL HEPATITIS PROGRAM—VACCINATIONS AND TESTING

2.1(135) Definitions
2.2(135) Purpose
2.3(135) Exposure risks for hepatitis C virus
2.4(135) Information for public distribution
2.5(135) Hepatitis vaccination and testing program
2.6 to 2.8 Reserved

HEPATITIS C AWARENESS PROGRAM—VETERANS

2.9(135) Definitions
2.10(135) Purpose
2.11(135) Awareness materials
2.12(135) Awareness information
2.13(135) Resources for hepatitis follow-up and treatment

CHAPTER 3
EARLY HEARING DETECTION AND INTERVENTION

EARLY HEARING DETECTION AND INTERVENTION (EHDI) PROGRAM

3.1(135) Definitions
3.2(135) Purpose
3.3(135) Goal and outcomes
3.4(135) Program components
3.5(135) Screening the hearing of all newborns
3.6(135) Procedures required of birthing hospitals
3.7(135) Procedures required of birth centers
3.8(135) Procedures to ensure that children born in locations other than a birth center or birthing hospital receive a hearing screening
3.9(135) Reporting hearing screening results and information to the department
3.10(135) Conducting and reporting screening results and diagnostic audiologic assessments to the department
3.11(135) Sharing of information and confidentiality
3.12 Reserved
3.13(135) Procedure to accommodate parental objection
3.14(135) Civil/criminal liability
3.15 and 3.16 Reserved

HEARING AIDS AND AUDIOLOGIC SERVICES FUNDING PROGRAM

3.17(83GA,HF811) Eligibility criteria
3.18(83GA,HF811) Covered services
3.19(83GA,HF811) Application procedures
3.20(83GA,HF811) Hearing aids and audiologic services funding wait list
3.21(83GA,HF811) Reimbursement of providers
3.22(83GA,HF811) Appeals

CHAPTER 4
CENTER FOR CONGENITAL AND INHERITED DISORDERS

4.1(136A) Program overview
4.2(136A) Definitions
4.3(136A) Iowa newborn screening program (INSP)
4.4(136A) Iowa maternal prenatal screening program (IMPSP)
4.5(136A) Regional genetic consultation service (RGCS)
4.6(136A) Neuromuscular and other related genetic disease program (NMP)
4.7(136A) Iowa registry for congenital and inherited disorders (IRCID)
4.8(135) Iowa's early hearing detection and intervention program
4.9 and 4.10 Reserved

CENTER FOR CONGENITAL AND INHERITED DISORDERS ADVISORY COMMITTEE (CIDAC)

4.11(136A) Purpose
4.12(136A) Duties of the committee
4.13(136A) Membership
4.14(136A) Meetings

CHAPTER 5
MATERNAL DEATHS

5.1(135) Reporting of maternal deaths
5.2(135) Ascertainment of maternal deaths
5.3(135) Reviewing of maternal deaths

CHAPTER 6
Reserved

CHAPTER 7
IMMUNIZATION AND IMMUNIZATION EDUCATION: PERSONS ATTENDING ELEMENTARY OR SECONDARY SCHOOLS, LICENSED CHILD CARE CENTERS OR INSTITUTIONS OF HIGHER EDUCATION

7.1(139A)	Definitions
7.2(139A)	Persons included
7.3(139A)	Persons excluded
7.4(139A)	Required immunizations
7.5(139A)	Required education
7.6(139A)	Proof of immunization
7.7(139A)	Provisional enrollment
7.8(139A)	Records and reporting
7.9(139A)	Providing immunization services
7.10(139A)	Compliance
7.11(22)	Statewide registry
7.12(22)	Release of immunization and health screening information

CHAPTER 8
IOWA CARE FOR YOURSELF (IA CFY) PROGRAM

8.1(135)	Definitions
8.2(135)	Components of the Iowa care for yourself (IA CFY) program
8.3(135)	Participant eligibility criteria
8.4(135)	Participant application procedures for IA CFY program services
8.5(135)	Priority for program expenditures
8.6(135)	Right to appeal
8.7(135)	Verification for the breast or cervical cancer treatment (BCCT) option of Medicaid

CHAPTER 9
OUTPATIENT DIABETES EDUCATION PROGRAMS

9.1(135)	Scope
9.2(135)	Definitions
9.3(135)	Powers and duties
9.4(135)	Application procedures for American Diabetes Association-recognized and American Association of Diabetes Educators-accredited programs
9.5(135)	Renewal procedures for American Diabetes Association-recognized and American Association of Diabetes Educators-accredited programs
9.6(135)	Application procedures for programs not recognized by the American Diabetes Association or accredited by the American Association of Diabetes Educators
9.7(135)	Diabetes program management for programs not recognized by the American Diabetes Association or accredited by the American Association of Diabetes Educators
9.8(135)	Program staff for programs not recognized by the American Diabetes Association or accredited by the American Association of Diabetes Educators
9.9(135)	Renewal application procedures for programs not recognized by the American Diabetes Association or accredited by the American Association of Diabetes Educators
9.10(135)	Annual report
9.11(135)	Enforcement
9.12(135)	Complaints

9.13(135) Appeal process
9.14(135) Formal contest

CHAPTER 10
IOWA GET SCREENED: COLORECTAL CANCER PROGRAM

10.1(135) Purpose
10.2(135) Definitions
10.3(135) Components of the Iowa get screened (IGS): colorectal cancer program
10.4(135) Medical advisory board
10.5(135) Participant eligibility criteria
10.6(135) Participant application procedures for IGS program services
10.7(135) Priority for program expenditures
10.8(135) Right to appeal
10.9(135) Colorectal cancer treatment

CHAPTER 11
HUMAN IMMUNODEFICIENCY VIRUS (HIV) INFECTION AND ACQUIRED IMMUNE DEFICIENCY SYNDROME (AIDS)

11.1(139A,141A) Definitions
11.2(141A) HIV testing—obtaining consent—voluntary HIV-related tests for adults who are not pregnant
11.3(139A,141A) HIV testing—obtaining consent—voluntary HIV-related tests for minors who are not pregnant
11.4(141A) HIV testing—obtaining consent—voluntary HIV-related tests for pregnant women
11.5(141A) HIV test results—post-test counseling
11.6(141A) Reporting of diagnoses and HIV-related tests, events, and conditions to the department
11.7(141A) Penalties
11.8(141A) Immunity
11.9 and 11.10 Reserved

TRAINING PROGRAMS

11.11(135) Purpose
11.12 to 11.14 Reserved

PARTNER NOTIFICATION SERVICES AND DIRECT NOTIFICATION OF AN IDENTIFIABLE THIRD PARTY

11.15(139A,141A) Purpose
11.16(139A,141A) Definitions
11.17(139A,141A) Partner notification services by the department
11.18(141A) Direct notification of an identifiable third party by a physician or the department
11.19 and 11.20 Reserved

CARE PROVIDERS EXPOSED TO CONTAGIOUS OR INFECTIOUS DISEASES

11.21(139A) Purpose
11.22(139A) Definitions
11.23(139A,141A) Exposures in non-clinical settings
11.24(139A,141A) Exposures in clinical settings
11.25(139A) Immunity
11.26(139A) Duty to test
11.27 to 11.29 Reserved

HIV-RELATED TEST FOR CONVICTED OR ALLEGED SEXUAL-ASSAULT OFFENDERS AND VICTIMS

11.30(915) Purpose
11.31(915) Definitions
11.32(915) HIV-related test—convicted or alleged sexual assault offender

11.33(915) Medical examination costs
11.34(915) Testing, reporting, and counseling—penalties
11.35 to 11.39 Reserved

AIDS DRUG ASSISTANCE PROGRAM (ADAP)

11.40(141A) Definitions
11.41(141A) Purpose
11.42(141A) Ensuring payer of last resort
11.43(141A) Eligibility requirements
11.44(141A) Enrollment process
11.45(141A) Discontinuation of services
11.46(141A) Distribution requirements
11.47(141A) ADAP waiting list
11.48(141A) Appeals
11.49(141A) Confidentiality

CHAPTER 12
APPROVAL OF CONFIRMATORY LABORATORIES FOR
PRIVATE SECTOR DRUG-FREE WORKPLACE TESTING

12.1(730) Purpose
12.2(730) Definitions
12.3(730) Powers and duties
12.4(730) Application procedures and requirements
12.5(730) Requirements of laboratory personnel involved in confirmatory testing for alcohol or other drugs, or their metabolites
12.6(730) Quality assurance program and procedure manual requirements
12.7(730) Analytical quality control
12.8(730) Sample security and confidentiality of test results
12.9(730) Confirmatory testing
12.10(730) Documentation of the confirmatory testing process
12.11(730) Reporting of confirmed positive test results to the medical review officer
12.12(730) Reporting requirements to department
12.13(730) Approval, renewal, and inspection fees
12.14(730) Renewal
12.15(730) Reciprocity
12.16(730) Changes during approval periods
12.17(730) Enforcement
12.18(730) Denial, suspension, modification or revocation of approval
12.19(730) Restoration of approval
12.20(730) Appeals process
12.21(730) Complaints

CHAPTER 13
Reserved

CHAPTER 14
WATER TREATMENT SYSTEMS

14.1(714) Purpose
14.2(714) Applicability
14.3(714) Definitions
14.4(714) Performance testing
14.5(714) Third-party testing agencies
14.6(714) Registration

14.7(714) Label and manufacturer's performance data sheet
14.8(714) Consumer information pamphlet
14.9(714) Sales of water treatment systems
14.10(714) Treatment of records
14.11(714) Penalties

CHAPTER 15
SWIMMING POOLS AND SPAS

15.1(135I) Applicability
15.2(135I) Scope
15.3(135I) Definitions and abbreviations

SWIMMING POOLS

15.4(135I) Swimming pool operations
15.5(135I) Construction and reconstruction

ADMINISTRATION

15.6(135I) Enforcement
15.7(135I) Variances
15.8(135I) Penalties
15.9(135I) Registration
15.10(135I) Training courses
15.11(135I) Swimming pool/spa operator qualifications
15.12(135I) Fees
15.13(135I) 28E agreements
15.14(135I) Application denial or partial denial—appeal
15.15 to 15.50 Reserved

SPAS

15.51(135I) Spa operations
15.52(135I) Construction and reconstruction

CHAPTERS 16 to 19
Reserved

CHAPTER 20
COMMUNITY WATER FLUORIDATION GRANT PROGRAM

20.1(135) Purpose
20.2(135) Definitions
20.3(135) Applications
20.4(135) Review and rating of applications
20.5(135) Project contracts
20.6(135) Implementation procedures
20.7(135) Reimbursement
20.8(135) Termination
20.9(135) Appeals

CHAPTER 21
CENTRAL REGISTRY FOR
BRAIN AND SPINAL CORD INJURIES

21.1(135) Purpose
21.2(135) Definitions
21.3(135) Reportable injuries
21.4(135) Who reports and under what circumstances
21.5(135) Method and frequency of reporting

21.6(135) Confidentiality
21.7(135) Quality assurance

CHAPTER 22
PRACTICE OF TATTOOING

22.1(135) Purpose
22.2(135) Definitions
22.3(135) General provisions
22.4(135) Sanitation and infection control
22.5(135) Equipment
22.6(135) Procedures
22.7(135) Permit issuance and renewal
22.8(135) Establishment permit requirements
22.9(135) Tattoo artist permit requirements
22.10(135) Temporary establishment permit requirements
22.11(135) Mobile unit permit requirements
22.12(135) Agreements
22.13(135) Inspection requirements
22.14(135) Tattoo inspector qualifications
22.15(135) Client records
22.16(135) Enforcement
22.17(135) Adverse actions and the appeal process

CHAPTER 23
PLUMBING AND MECHANICAL SYSTEMS BOARD—LICENSEE PRACTICE

23.1(105) Definitions
23.2(105) Duties of all licensees, specialty licensees, and certificate holders
23.3(105) Contractor license
23.4(105) Master license
23.5(105) Journeyperson license
23.6(105) Apprentice license
23.7(105) Specialty licenses and certifications
23.8(105) Inactive license

CHAPTER 24
PRIVATE WELL TESTING, RECONSTRUCTION, AND
PLUGGING—GRANTS TO COUNTIES

24.1(135) Applicability
24.2(135) Definitions
24.3(135) Eligibility
24.4(135) Goal and objectives
24.5(135) Eligible grant costs
24.6(135) Ineligible grant costs
24.7(135) Performance requirements
24.8(135) Contents of grant application
24.9(135) Grant application submission
24.10(135) Multicounty grant applications
24.11(135) Grant period
24.12(135) Record keeping and retention
24.13(135) Grant amendments
24.14(135) Termination or forfeiture of grant funds

CHAPTER 25
STATE PLUMBING CODE

25.1(105) Adoption
25.2(105) Applicability
25.3(105) Fuel gas piping
25.4(105) Amendments to Uniform Plumbing Code
25.5(105) Backflow prevention with containment

CHAPTER 26
BACKFLOW PREVENTION ASSEMBLY TESTER REGISTRATION

26.1(135K) Applicability
26.2(135K) Definitions
26.3(135K) Registration required
26.4(135K) Backflow prevention assembly tester training
26.5(135K) Registration
26.6(135K) Standards of conduct
26.7(135K) Penalty
26.8(135K) Denial, suspension or revocation

CHAPTER 27
PLUMBING AND MECHANICAL SYSTEMS BOARD—ADMINISTRATIVE AND REGULATORY AUTHORITY

27.1(17A,105) Definitions
27.2(17A,105) Purpose of board
27.3(17A,105) Organization of board and proceedings
27.4(17A,105) Official communications
27.5(17A,105) Office hours
27.6(21) Public meetings

CHAPTER 28
PLUMBING AND MECHANICAL SYSTEMS BOARD—LICENSURE FEES

28.1(105) Fees
28.2(105) Annual review of fee schedule

CHAPTER 29
PLUMBING AND MECHANICAL SYSTEMS BOARD—APPLICATION, LICENSURE, AND EXAMINATION

29.1(105) Definitions
29.2(105) Available licenses and general requirements
29.3(105) Medical gas piping certification
29.4(105) Minimum qualifications for licensure
29.5(105) General requirements for application for licensure
29.6(105) Examination
29.7(105) License renewal
29.8(105) License reissue
29.9(105) Waiver from examination for military service

CHAPTER 30
CONTINUING EDUCATION FOR PLUMBING AND MECHANICAL SYSTEMS PROFESSIONALS

30.1(105) Definitions
30.2(105) Continuing education requirements
30.3(105) Continuing education programs/activities

30.4(105) Course instructor(s)
30.5(105) Compliance review of continuing education requirements
30.6(105) Continuing education exemptions
30.7(105) Continuing education extensions
30.8(105) Continuing education reporting requirements

CHAPTER 31
PLUMBING AND MECHANICAL SYSTEMS BOARD—WAIVERS OR VARIANCES FROM ADMINISTRATIVE RULES

31.1(17A,105,272C) Definitions
31.2(17A,105,272C) Scope of chapter
31.3(17A,105,272C) Applicability of chapter
31.4(17A,105,272C) Criteria for waiver or variance
31.5(17A,105,272C) Filing of petition
31.6(17A,105,272C) Content of petition
31.7(17A,105,272C) Additional information
31.8(17A,105,272C) Notice
31.9(17A,105,272C) Hearing procedures
31.10(17A,105,272C) Ruling
31.11(17A,105,272C) Public availability
31.12(17A,105,272C) Summary reports
31.13(17A,105,272C) Cancellation of a waiver
31.14(17A,105,272C) Violations
31.15(17A,105,272C) Defense
31.16(17A,105,272C) Judicial review

CHAPTER 32
PLUMBING AND MECHANICAL SYSTEMS BOARD—LICENSEE DISCIPLINE

32.1(105,272C) Definitions
32.2(105,272C) Grounds for discipline
32.3(105,272C) Method of discipline
32.4(272C) Discretion of board
32.5(105) Civil penalties
32.6(105,272C) Collection of delinquent civil penalties and discipline-related debts

CHAPTER 33
PLUMBING AND MECHANICAL SYSTEMS BOARD—CONTESTED CASES

33.1(17A,105,272C) Scope and applicability
33.2(17A,105,272C) Definitions
33.3(17A) Time requirements
33.4(17A,272C) Probable cause
33.5(17A,272C) Informal settlement
33.6(17A) Statement of charges
33.7(17A) Requests for contested case proceeding
33.8(105) Legal representation
33.9(17A,105,272C) Presiding officer in a disciplinary contested case
33.10(17A) Presiding officer in a nondisciplinary contested case
33.11(17A) Disqualification
33.12(17A) Consolidation—severance
33.13(17A) Pleadings
33.14(17A) Service and filing
33.15(17A) Discovery
33.16(17A,272C) Subpoenas in a contested case

33.17(17A) Motions
33.18(17A) Withdrawals
33.19(17A) Intervention
33.20(17A) Telephone proceedings
33.21(17A) Prehearing conferences
33.22(17A) Continuances
33.23(272C) Settlement agreements
33.24(17A) Hearing procedures
33.25(17A) Evidence
33.26(17A) Default
33.27(17A) Ex parte communication
33.28(17A) Recording costs
33.29(17A) Interlocutory appeals
33.30(17A,272C) Decisions
33.31(17A,272C) Client notification
33.32(17A,272C) Application for rehearing
33.33(17A) Stays of board actions
33.34(17A) No factual dispute contested cases
33.35(17A) Emergency adjudicative proceedings
33.36(17A,105,272C) License denial
33.37(17A,105,272C) Denial of application to renew license
33.38(105,272C) Recovery of hearing fees and expenses
33.39(17A) Judicial review
33.40(17A,272C) Reinstatement

CHAPTER 34
PLUMBING AND MECHANICAL SYSTEMS BOARD—COMPLAINTS AND INVESTIGATIONS
34.1(272C) Complaints
34.2(272C) Report of malpractice claims or actions or disciplinary actions
34.3(272C) Report of acts or omissions
34.4(272C) Investigation of complaints or reports
34.5(17A,272C) Issuance of investigatory subpoenas
34.6(272C) Peer review committees
34.7(17A) Appearance

CHAPTER 35
PLUMBING AND MECHANICAL SYSTEMS BOARD—LICENSURE OF NONRESIDENT APPLICANT—RECIPROCITY
35.1(105) Definition
35.2(105) Reciprocity agreements
35.3(105) Application by reciprocity

CHAPTER 36
PLUMBING AND MECHANICAL SYSTEMS BOARD—PETITIONS FOR RULE MAKING
36.1(17A) Petition for rule making
36.2(17A) Briefs
36.3(17A) Inquiries
36.4(17A) Board consideration

CHAPTER 37
PHYSICAL PROTECTION OF CATEGORY 1 AND CATEGORY 2 QUANTITIES OF RADIOACTIVE MATERIAL

GENERAL PROVISIONS

37.1(136C) Purpose and scope
37.2 to 37.4 Reserved
37.5(136C) Definitions
37.6 Reserved
37.7(136C) Communications
37.8 to 37.10 Reserved
37.11(136C) Specific exemptions
37.12 to 37.20 Reserved

BACKGROUND INVESTIGATIONS AND ACCESS CONTROL PROGRAM

37.21(136C) Personnel access authorization requirements for category 1 or category 2 quantities of radioactive material
37.22 Reserved
37.23(136C) Access authorization program requirements
37.24 Reserved
37.25(136C) Background investigations
37.26 Reserved
37.27(136C) Requirements for criminal history records checks of individuals granted unescorted access to category 1 or category 2 quantities of radioactive material
37.28 Reserved
37.29(136C) Relief from fingerprinting, identification, and criminal history records checks and other elements of background investigations for designated categories of individuals permitted unescorted access to certain radioactive materials
37.30 Reserved
37.31(136C) Protection of information
37.32 Reserved
37.33(136C) Access authorization program review
37.34 to 37.40 Reserved

PHYSICAL PROTECTION REQUIREMENTS DURING USE

37.41(136C) Security program
37.42 Reserved
37.43(136C) General security program requirements
37.44 Reserved
37.45(136C) LLEA coordination
37.46 Reserved
37.47(136C) Security zones
37.48 Reserved
37.49(136C) Monitoring, detection, and assessment
37.50 Reserved
37.51(136C) Maintenance and testing
37.52 Reserved
37.53(136C) Requirements for mobile devices
37.54 Reserved
37.55(136C) Security program review
37.56 Reserved
37.57(136C) Reporting of events
37.58 to 37.70 Reserved

PHYSICAL PROTECTION IN TRANSIT

37.71(136C) Additional requirements for transfer of category 1 and category 2 quantities of radioactive material
37.72 Reserved
37.73(136C) Applicability of physical protection of category 1 and category 2 quantities of radioactive material during transit
37.74 Reserved
37.75(136C) Preplanning and coordination of shipment of category 1 or category 2 quantities of radioactive material
37.76 Reserved
37.77(136C) Advance notification of shipment of category 1 quantities of radioactive material
37.78 Reserved
37.79(136C) Requirements for physical protection of category 1 and category 2 quantities of radioactive material during shipment
37.80 Reserved
37.81(136C) Reporting of events
37.82 to 37.100 Reserved

RECORDS

37.101(136C) Form of records
37.102 Reserved
37.103(136C) Record retention
37.104 Reserved
37.105(136C) Inspections

CHAPTER 38
GENERAL PROVISIONS FOR RADIATION MACHINES
AND RADIOACTIVE MATERIALS

38.1(136C) Purpose and scope
38.2(136C) Definitions
38.3(136C) Exemptions from the regulatory requirements
38.4(136C) General regulatory requirements
38.5 Reserved
38.6(136C) Prohibited uses
38.7(136C) Communications
38.8(136C) Fees
38.9(136C) Administrative enforcement actions
38.10(136C) Deliberate misconduct

CHAPTER 39
REGISTRATION OF RADIATION MACHINE FACILITIES, LICENSURE OF RADIOACTIVE MATERIALS AND TRANSPORTATION OF RADIOACTIVE MATERIALS

39.1(136C) Purpose and scope
39.2(136C) Definitions
39.3(136C) Requirements for registration of X-ray and other electronic machines that produce radiation
39.4(136C) Requirements for licensing of radioactive materials
39.5(136C) Transportation of radioactive material

CHAPTER 40
STANDARDS FOR PROTECTION AGAINST RADIATION

GENERAL PROVISIONS

40.1(136C) Purpose and scope
40.2(136C) Definitions
40.3(136C) Implementation
40.4 to 40.9 Reserved

RADIATION PROTECTION PROGRAMS

40.10(136C) Radiation protection programs
40.11 to 40.14 Reserved

OCCUPATIONAL DOSE LIMITS

40.15(136C) Occupational dose limits for adults
40.16(136C) Compliance with requirements for summation of external and internal doses
40.17(136C) Determination of external dose from airborne radioactive material
40.18(136C) Determination of internal exposure
40.19(136C) Determination of prior occupational dose
40.20(136C) Planned special exposures
40.21(136C) Occupational dose limits for minors
40.22(136C) Dose equivalent to an embryo/fetus
40.23 to 40.25 Reserved

RADIATION DOSE LIMITS FOR INDIVIDUAL MEMBERS OF THE PUBLIC

40.26(136C) Dose limits for individual members of the public
40.27(136C) Compliance with dose limits for individual members of the public

RADIOLOGICAL CRITERIA FOR LICENSE TERMINATION

40.28(136C) Radiological criteria for license termination
40.29(136C) Radiological criteria for unrestricted use
40.30(136C) Criteria for license termination under restricted conditions
40.31(136C) Alternate criteria for license termination

TESTING FOR LEAKAGE OR CONTAMINATION OF SEALED SOURCES

40.32(136C) Testing for leakage or contamination of sealed sources
40.33 to 40.35 Reserved

SURVEYS AND MONITORING

40.36(136C) Surveys and monitoring—general
40.37(136C) Conditions requiring individual monitoring of external and internal occupational dose
40.38 to 40.41 Reserved

CONTROL OF EXPOSURE FROM EXTERNAL SOURCES IN RESTRICTED AREAS

40.42(136C) Control of access to high radiation areas
40.43(136C) Control of access to very high radiation areas
40.44(136C) Control of access to very high radiation areas—irradiators
40.45 to 40.47 Reserved

RESPIRATORY PROTECTION AND CONTROLS TO RESTRICT INTERNAL EXPOSURE IN RESTRICTED AREAS

40.48(136C) Use of process or other engineering controls
40.49(136C) Use of other controls
40.50(136C) Use of individual respiratory protection equipment
40.51 to 40.53 Reserved

STORAGE AND CONTROL OF LICENSED OR REGISTERED SOURCES OF RADIATION

40.54	Reserved
40.55(136C)	Security and control of licensed or registered sources of radiation
40.56(136C)	Control of sources of radiation not in storage
40.57 to 40.59	Reserved

PRECAUTIONARY PROCEDURES

40.60(136C)	Caution signs
40.61(136C)	Posting requirements
40.62(136C)	Exceptions to posting requirements
40.63(136C)	Labeling containers and radiation machines
40.64(136C)	Exemptions to labeling requirements
40.65(136C)	Procedures for receiving and opening packages
40.66 to 40.69	Reserved

WASTE DISPOSAL

40.70(136C)	General requirements
40.71(136C)	Method for obtaining approval of proposed disposal procedures
40.72(136C)	Disposal by release into sanitary sewerage
40.73(136C)	Treatment or disposal by incineration
40.74(136C)	Disposal of specific wastes
40.75(136C)	Transfer for disposal and manifests
40.76(136C)	Compliance with environmental and health protection regulations
40.77(136C)	Disposal of certain by-product material
40.78 and 40.79	Reserved

RECORDS

40.80(136C)	General provisions
40.81(136C)	Records of radiation protection programs
40.82(136C)	Records of surveys
40.83(136C)	Records of tests for leakage or contamination of sealed sources
40.84(136C)	Records of prior occupational dose
40.85(136C)	Records of planned special exposures
40.86(136C)	Records of individual monitoring results
40.87(136C)	Records of dose to individual members of the public
40.88(136C)	Records of waste disposal
40.89(136C)	Records of testing entry control devices for very high radiation areas
40.90(136C)	Form of records
40.91 to 40.94	Reserved

REPORTS

40.95(136C)	Reports of stolen, lost, or missing licensed or registered sources of radiation
40.96(136C)	Notification of incidents
40.97(136C)	Reports of exposures, radiation levels, and concentrations of radioactive material exceeding the constraints or limits
40.98(136C)	Reports of planned special exposures
40.99(136C)	Reports of transactions involving nationally tracked sources
40.100(136C)	Reports of individual monitoring
40.101(136C)	Notifications and reports to individuals
40.102(136C)	Reports of leaking or contaminated sealed sources
40.103 and 40.104	Reserved

ADDITIONAL REQUIREMENTS

40.105(136C) Vacating premises
40.106 to 40.109 Reserved

NOTICES, INSTRUCTIONS, AND REPORTS TO WORKERS; INSPECTIONS

40.110(136C) Posting of notices to workers
40.111(136C) Instructions to workers
40.112(136C) Notifications and reports to individuals
40.113(136C) Presence of representatives of licensees or registrants and workers during inspection
40.114(136C) Consultation with workers during inspections
40.115(136C) Requests by workers for inspections
40.116(136C) Inspections not warranted—informal review
40.117(136C) Employee protection

CHAPTER 41
SAFETY REQUIREMENTS FOR THE USE OF
RADIATION MACHINES AND CERTAIN USES
OF RADIOACTIVE MATERIALS

41.1(136C) X-rays in the healing arts
41.2(136C) Use of radionuclides in the healing arts
41.3(136C) Therapeutic use of radiation machines
41.4 and 41.5 Reserved
41.6(136C) X-ray machines used for screening and diagnostic mammography
41.7(136C) X-ray machines used for stereotactically guided breast biopsy

CHAPTER 42
PERMIT TO OPERATE IONIZING RADIATION PRODUCING MACHINES
OR ADMINISTER RADIOACTIVE MATERIALS

42.1(136C) Purpose
42.2(136C) Definitions
42.3(136C) Exemptions

PERMIT APPLICATION AND RENEWAL

42.4(136C) Permit application and renewal
42.5(136C) Permit to practice as a general radiologic technologist
42.6(136C) Permit to practice as a general nuclear medicine technologist
42.7(136C) Permit to practice as a radiation therapist
42.8(136C) Permit to practice as a radiologist assistant
42.9(136C) Permit to practice as a limited radiologic technologist with categories of chest, spine, extremities, shoulder, pediatric
42.10(136C) Permit to practice as an X-ray equipment operator in either podiatric radiography or bone densitometry
42.11 Reserved
42.12(136C) Closed classification or category permits
42.13(136C) Combining permits for an individual qualifying for permits in more than one classification
42.14 to 42.17 Reserved

PERMIT HOLDER SUBMISSION OF CONTINUING EDUCATION

42.18(136C) Submission of proof of completion of continuing education by permit holder to meet continuing education requirements to renew or reinstate a permit
42.19 and 42.20 Reserved

ADMINISTRATIVE ITEMS AND GROUNDS FOR DISCIPLINARY ACTION

42.21(136C) Administrative items
42.22(136C) Rules of conduct, self-reporting requirements, and enforcement actions for all permit holders
42.23(136C) Procedures for demand for information, notice of proposed action, and orders for penalties, suspensions, revocations, and civil penalties for all individuals under this chapter
42.24 and 42.25 Reserved

DEPARTMENT APPROVAL OF CONTINUING EDUCATION ACTIVITIES

42.26(136C) Department approval of continuing education activities
42.27 to 42.29 Reserved

FORMAL EDUCATION

42.30(136C) Requirements for formal education
42.31(136C) Standards for formal education for limited radiologic technologists
42.32(136C) Standards for formal education for X-ray equipment operators in podiatric radiography
42.33(136C) Standards for formal education for X-ray equipment operators in bone densitometry

CHAPTER 43
MINIMUM REQUIREMENTS FOR RADON TESTING AND ANALYSIS

43.1(136B) Purpose and scope
43.2(136B) Definitions
43.3(136B) General provisions
43.4(136B) Application for certification
43.5(136B) Revocation of certification
43.6(136B) Reporting requirements
43.7(136B) Training and continuing education programs
43.8(136B) Exemptions
43.9(136B) Enforcement
43.10(136B) Penalties
43.11(136B) Persons exempted from certification

CHAPTER 44
MINIMUM REQUIREMENTS FOR RADON MITIGATION

44.1(136B) Purpose and scope
44.2(136B) Definitions
44.3(136B) General provisions
44.4(136B) Application for credentialing
44.5(136B) Revocation of credentialing
44.6(136B) Additional record-keeping requirements
44.7(136B) Continuing education
44.8(136B) Exemptions
44.9(136B) Enforcement
44.10(136B) Penalties

CHAPTER 45
RADIATION SAFETY REQUIREMENTS FOR INDUSTRIAL RADIOGRAPHIC OPERATIONS

45.1(136C) General requirements for industrial radiography operations
45.2(136C) Radiation safety requirements for the use of radiation machines in industrial radiography

45.3(136C) Radiation safety requirements for use of sealed sources of radiation in industrial radiography
45.4(136C) Radiation safety requirements for the use of particle accelerators for nonhuman use
45.5(136C) Radiation safety requirements for analytical X-ray equipment
45.6(136C) Radiation safety requirements for well-logging, wireline service operations and subsurface tracer studies

CHAPTER 46
MINIMUM REQUIREMENTS FOR TANNING FACILITIES
46.1(136D) Purpose and scope
46.2(136D) Definitions
46.3(136D) Exemptions
46.4(136D) Permits and fees
46.5(136D) Construction and operation of tanning facilities
46.6(136D) Inspections, violations and injunctions

CHAPTERS 47 to 49
Reserved

CHAPTER 50
ORAL HEALTH
50.1(135) Purpose
50.2(135) Definitions
50.3(135) Dental director responsibilities
50.4(135) Oral health bureau functions
50.5(135) Funding

CHAPTER 51
DENTAL SCREENING
51.1(135) Purpose
51.2(135) Definitions
51.3(135) Persons included
51.4(135) Persons excluded
51.5(135) Dental screening components
51.6(135) Dental screening providers
51.7(135) Time line for valid dental screening
51.8(135) Proof of dental screening
51.9(135) Dental screening documentation
51.10(135) Assuring dental screening services
51.11(135) Records
51.12(135) Reporting
51.13(135) Iowa's dental screening database
51.14(135) Release of dental screening information
51.15(135) Referral requirements
51.16(135) Provider training

CHAPTERS 52 to 54
Reserved

CHAPTER 55
ADVISORY COUNCIL ON BRAIN INJURIES
55.1(135) Definitions
55.2(135) Mission of council
55.3(135) Council established

55.4(135) Officers
55.5(135) Duties of the council
55.6(135) Meetings
55.7(135) Minutes
55.8(135) Task forces
55.9(135) Expenses of advisory council members

CHAPTER 56
BRAIN INJURY SERVICES PROGRAM

56.1(135) Definitions
56.2(135) Purpose
56.3(135) Waiver-eligible component
56.4(135) Cost-share component
56.5(135) Application process
56.6(135) Service providers and reimbursement
56.7(135) Available services/service plan
56.8(135) Redetermination
56.9(135) Appeal rights

CHAPTER 57
PLUMBING AND MECHANICAL SYSTEMS BOARD—
DECLARATORY ORDERS

57.1(17A) Petition for declaratory order
57.2(17A) Notice of petition
57.3(17A) Intervention
57.4(17A) Briefs
57.5(17A) Inquiries
57.6(17A) Service and filing of petitions and other papers
57.7(17A) Consideration
57.8(17A) Action on petition
57.9(17A) Refusal to issue order
57.10(17A) Contents of declaratory order—effective date
57.11(17A) Copies of orders
57.12(17A) Effect of a declaratory order

CHAPTER 58
PLUMBING AND MECHANICAL SYSTEMS BOARD—
AGENCY PROCEDURE FOR RULE MAKING

58.1(17A) Applicability
58.2(17A) Advice on possible rules before notice of proposed rule adoption
58.3(17A) Public rule-making docket
58.4(17A) Notice of proposed rule making
58.5(17A) Public participation
58.6(17A) Regulatory analysis
58.7(17A) Fiscal impact statement
58.8(17A) Time and manner of rule adoption
58.9(17A) Variance between adopted rule and published notice of proposed rule adoption
58.10(17A) Exemptions from public rule-making procedures
58.11(17A) Concise statement of reasons
58.12(17A) Contents, style, and form of rule
58.13(17A) Agency rule-making record
58.14(17A) Filing of rules
58.15(17A) Effectiveness of rules prior to publication

58.16(17A) General statements of policy
58.17(17A) Review by agency of rules

CHAPTER 59
PLUMBING AND MECHANICAL SYSTEMS BOARD—FAIR INFORMATION PRACTICES AND PUBLIC RECORDS

59.1(17A,22) Definitions
59.2(17A,22) Statement of policy
59.3(17A,22) Requests for access to records
59.4(17A,22) Access to confidential records
59.5(17A,22) Requests for treatment of a record as a confidential record and its withholding from examination
59.6(17A,22) Procedure by which additions, dissents, or objections may be entered into certain records
59.7(17A,22) Consent to disclosure by the subject of a confidential record
59.8(17A,22) Notice to suppliers of information
59.9(17A,22) Disclosures without the consent of the subject
59.10(17A,22) Routine use
59.11(17A,22) Consensual disclosure of confidential records
59.12(17A,22) Release to subject
59.13(17A,22) Availability of records
59.14(17A,22) Personally identifiable information
59.15(17A,22) Other groups of records routinely available for public inspection
59.16(17A,22) Applicability

CHAPTER 60
PLUMBING AND MECHANICAL SYSTEMS BOARD—NONCOMPLIANCE REGARDING CHILD SUPPORT, NONPAYMENT OF STATE DEBT, AND NONCOMPLIANCE REGARDING STUDENT LOAN REPAYMENT

60.1(252J) Child support noncompliance
60.2(272D) Nonpayment of state debt
60.3(261) Student loan repayment noncompliance

CHAPTER 61
STATE MECHANICAL CODE

61.1(105) Definitions
61.2(105) Adoption by reference
61.3(105) Hospitals and health care facilities
61.4(105) Enforcement

CHAPTERS 62 to 66
Reserved

CHAPTER 67
BLOOD LEAD TESTING

67.1(135) Purpose
67.2(135) Definitions
67.3(135) Persons included
67.4(135) Persons excluded
67.5(135) Blood lead testing requirement
67.6(135) Time line for valid blood lead testing
67.7(135) Proof of blood lead testing
67.8(135) Referral requirements

67.9(135) Blood lead testing documentation
67.10(135) Records
67.11(135) Provider training

CHAPTER 68
CONTROL OF LEAD-BASED PAINT HAZARDS

68.1(135) Applicability
68.2(135) Definitions
68.3(135) Elevated blood lead (EBL) inspections required
68.4(135) Refusal of admittance
68.5(135) Lead hazard reduction required
68.6(135) Retaliation prohibited
68.7(135) Enforcement
68.8(135) Hearings
68.9(135) Variances
68.10(135) Injunction
68.11(135) Effective date

CHAPTER 69
RENOVATION, REMODELING, AND REPAINTING—
LEAD HAZARD NOTIFICATION PROCESS

69.1(135) Applicability
69.2(135) Definitions
69.3(135) Notification required in target housing
69.4(135) Notification required in multifamily housing
69.5(135) Emergency renovation, remodeling, or repainting in target housing
69.6(135) Certification of attempted delivery in target housing
69.7(135) Notification required in child-occupied facilities
69.8(135) Emergency renovation, remodeling, or repainting in child-occupied facilities
69.9(135) Certification of attempted delivery for child-occupied facilities
69.10(135) Subcontracts
69.11(135) Exemption
69.12(135) Record-keeping requirements
69.13(135) Compliance inspections
69.14(135) Enforcement
69.15(135) Waivers

CHAPTER 70
LEAD-BASED PAINT ACTIVITIES

70.1(135) Applicability
70.2(135) Definitions
70.3(135) Lead professional certification
70.4(135) Course approval and standards
70.5(135) Certification, interim certification, and recertification
70.6(135) Work practice standards for lead professionals conducting lead-based paint activities in target housing and child-occupied facilities
70.7(135) Firms
70.8 Reserved
70.9(135) Compliance inspections
70.10(135) Denial, suspension, or revocation of certification; denial, suspension, revocation, or modification of course approval; and imposition of penalties
70.11(135) Waivers

CHAPTER 71
EMERGENCY INFORMATION SYSTEM ON PESTICIDES FOR USE BY HEALTH CARE PROVIDERS DURING MEDICAL EMERGENCIES

71.1(139A) Scope
71.2(139A) Definitions
71.3(139A) Operation of EIS

CHAPTER 72
CHILDHOOD LEAD POISONING PREVENTION PROGRAM

72.1(135) Definitions
72.2(135) Approved programs
72.3(135) Level of funding
72.4(135) Appeals

CHAPTER 73
SPECIAL SUPPLEMENTAL NUTRITION PROGRAM FOR WOMEN, INFANTS, AND CHILDREN (WIC)

73.1(135) Program explanation
73.2(135) Adoption by reference
73.3(135) Availability of rules
73.4(135) Certain rules exempted from public participation
73.5(135) Definitions
73.6(135) Staffing of contract agencies
73.7(135) Certification of participants
73.8(135) Food delivery
73.9(135) Food package
73.10(135) Education
73.11(135) Health services
73.12(135) Appeals and fair hearings—local agencies and vendors
73.13(135) Right to appeal—participant
73.14(135) State monitoring of contract agencies
73.15(135) Migrant services
73.16(135) Civil rights
73.17(135) Audits
73.18(135) Reporting
73.19(135) Program violation
73.20(135) Data processing
73.21(135) Outreach
73.22(135) Caseload management
73.23(135) Grant application procedures for contract agencies
73.24(135) Participant rights

CHAPTER 74
FAMILY PLANNING SERVICES

74.1(135) Program explanation
74.2(135) Adoption by reference
74.3(135) Rule coverage
74.4(135) Definitions
74.5(135) Grant application procedures for contract agencies
74.6(135) Funding levels for contract agencies
74.7(135) Agency performance
74.8(135) Reporting

74.9(135) Fiscal management
74.10(135) Audits
74.11(135) Denial, suspension, revocation, or reduction of contracts with contract agencies
74.12(135) Right to appeal—contract agency

CHAPTER 75
STATEWIDE OBSTETRICAL AND
NEWBORN INDIGENT PATIENT CARE PROGRAM

75.1(255A) Definitions
75.2(255A) Covered services
75.3(255A) Quota assignment
75.4(255A) Eligibility criteria
75.5(255A) Application procedures
75.6(255A) Reimbursement of providers
75.7(255A) Reassignment of county quotas
75.8(255A) Appeals and fair hearings

CHAPTER 76
MATERNAL AND CHILD HEALTH PROGRAM

76.1(135) Program overview
76.2(135) Adoption by reference
76.3(135) Rule coverage
76.4(135) Definitions
76.5(135) MCH services
76.6(135) Client eligibility criteria
76.7(135) Client application procedures for MCH services
76.8(135) Right to appeal—client
76.9(135) Grant application procedures for community-based contract agencies
76.10(135) Funding levels for community-based contract agencies
76.11(135) Contract agency performance
76.12(135) Reporting
76.13(135) Fiscal management
76.14(135) Audits
76.15 Reserved
76.16(135) Denial, suspension, revocation or reduction of contracts with contract agencies
76.17(135) Right to appeal—contract agency
76.18 to 76.20 Reserved

MATERNAL AND CHILD HEALTH ADVISORY COUNCIL

76.21(135) Purpose
76.22(135) Mission
76.23(135) Membership
76.24(135) Officers
76.25(135) Duties of the council
76.26(135) Meetings
76.27(135) Executive committee
76.28(135) Committees

CHAPTER 77
LOCAL BOARDS OF HEALTH

77.1(137) Purpose
77.2(137) Definitions
77.3(137) Local boards of health—roles and responsibilities

77.4(137) Local boards of health—Iowa public health standards
77.5(137) Organization of local boards of health
77.6(137) Operation of local boards of health
77.7(137) Expenses of local board of health members
77.8(137) District boards of health
77.9(137) Approval of district board of health formation
77.10(137) Denial of district board of health formation
77.11(137) Adding to a district board of health
77.12(137) Withdrawal from a district board of health

CHAPTERS 78 and 79
Reserved

CHAPTER 80
LOCAL PUBLIC HEALTH SERVICES
80.1(135) Purpose
80.2(135) Definitions
80.3(135) Local public health services state grant
80.4(135) Billing services to the local public health services state grant
80.5(135) Right to appeal
80.6(135) Case management
80.7(135) Local board of health services
80.8(135) Local public health services
80.9(135) Public health nursing services
80.10(135) Home care aide services

CHAPTER 81
GENERAL RULES FOR MIGRATORY LABOR CAMPS
81.1(138) Shelters
81.2(138) Water supply
81.3(138) Waste disposal
81.4(138) Bathing facilities
81.5(138) Central dining facilities
81.6(138) Safety and fire

CHAPTER 82
OFFICE OF MINORITY AND MULTICULTURAL HEALTH
82.1(135) Purpose
82.2(135) Definitions
82.3(135) Responsibilities of the office of minority and multicultural health
82.4(135) Advisory council

CHAPTERS 83 and 84
Reserved

CHAPTER 85
LOCAL SUBSTITUTE MEDICAL DECISION-MAKING BOARDS
85.1(135) Purpose
85.2(135) Definitions
85.3(135) Appointment of local boards
85.4(135) Filing an application
85.5(135) Notification of patient and review of application
85.6(135) Panel appointment and procedures
85.7(135) Panel determination of need for surrogate decision making

85.8(135) Panel determination regarding proposed medical care decision
85.9(135) Right of appeal
85.10(135) Records and reports
85.11(135) Liability

CHAPTER 86
PLACES WHERE DEAD HUMAN BODIES ARE PREPARED
FOR BURIAL OR ENTOMBMENT

86.1(156) Purpose
86.2(156) Definitions
86.3(156) Licensing
86.4(156) Public access areas
86.5(156) Preparation room
86.6(156) Crematorium chambers
86.7(156) Inspection fees

CHAPTER 87
HEALTHY FAMILIES IOWA (HFI)

87.1(135) Purpose
87.2(135) Definitions
87.3(135) Applicant eligibility
87.4(135) Participant eligibility
87.5(135) Program requirements
87.6(135) Contractor assurance
87.7(135) Applicant appeal process
87.8(135) Participant right to appeal

CHAPTER 88
VOLUNTEER HEALTH CARE PROVIDER PROGRAM

88.1(135) Purpose
88.2(135) Definitions
88.3(135) Eligibility for the volunteer health care provider program
88.4(135) Sponsor entity and protected clinic
88.5(135) Covered health care services
88.6(135) Defense and indemnification
88.7(135) Term of agreement
88.8(135) Reporting requirements and duties
88.9(135) Revocation of agreement
88.10(135) Procedure for revocation of agreement
88.11(135) Effect of suspension or revocation
88.12(135) Protection denied
88.13(135) Board notice of disciplinary action
88.14(135) Effect of eligibility protection
88.15(135) Reporting by a protected clinic or sponsor entity

CHAPTER 89
DECISION-MAKING ASSISTANCE PROGRAM
AND PARENTAL NOTIFICATION OF INTENT
TO TERMINATE A PREGNANCY THROUGH ABORTION

89.1(135L) Title
89.2(135L) Purpose and scope
89.3(135L) Definitions
89.4 to 89.10 Reserved

DECISION-MAKING ASSISTANCE PROGRAM

89.11(135L) Purpose
89.12(135L) Initial appointment of a pregnant minor with a licensed physician from whom an abortion is sought and certification procedure for the decision-making assistance program
89.13 to 89.20 Reserved

NOTIFICATION PROCESS

89.21(135L) Notification of parent prior to the performance of abortion on a pregnant minor
89.22(135L) Exceptions to notification of parent
89.23(135L) Physician compliance
89.24 and 89.25 Reserved
89.26(135L) Fraudulent practice

CHAPTER 90
IOWA CHILD DEATH REVIEW TEAM

90.1(135) Purpose
90.2(135) Definitions
90.3(135) Agency
90.4(135) Membership
90.5(135) Officers
90.6(135) Meetings
90.7(135) Expenses of team members
90.8(135) Team responsibilities
90.9(135) Liaisons
90.10(135) Confidentiality and disclosure of information
90.11(135) Immunity and liability

CHAPTER 91
IOWA DOMESTIC ABUSE DEATH REVIEW TEAM

91.1(135) Purpose
91.2(135) Definitions
91.3(135) Agency
91.4(135) Membership
91.5(135) Officers
91.6(135) Meetings
91.7(135) Expenses of team members
91.8(135) Team duties and responsibilities
91.9(135) Liaisons
91.10(135) Confidentiality and disclosure of information
91.11(135) Immunity and liability

CHAPTER 92
IOWA FATALITY REVIEW COMMITTEE

92.1(135) Purpose
92.2(135) Definitions
92.3(135) Committee
92.4(135) Formation of the committee
92.5(135) Committee protocol for review
92.6(135) Content of report
92.7(135) Consultation with county attorney
92.8(135) Supplemental report

92.9(135) Confidentiality and disclosure of information
92.10(135) Immunity and liability

CHAPTER 93
MANDATORY REPORTER TRAINING CURRICULA

93.1(135) Purpose
93.2 and 93.3 Reserved
93.4(135) Duties
93.5(135) Standards for approval of curricula
93.6(135) Process for application review and approval
93.7(135) Process for appeal

CHAPTER 94
CHILD PROTECTION CENTER GRANT PROGRAM

94.1(135) Scope and purpose
94.2(135) Definitions
94.3(135) Goals
94.4(135) Review process
94.5(135) Eligibility and criteria
94.6(135) Appeals

CHAPTER 95
VITAL RECORDS: GENERAL ADMINISTRATION

95.1(144) Definitions
95.2(144) Vital records and statistics
95.3(144) Forms—property of department
95.4(144) Information by others
95.5(144) Handling of vital records
95.6(144) Fees
95.7(144) General public access of vital records in the custody of the county registrar
95.8(144) Direct tangible interest in and entitlement to a vital record
95.9(144) Search and issuance of a certified copy of a vital record
95.10(144) Search and issuance for genealogy or family history
95.11(144) Registrars' responsibility for maintenance of confidentiality
95.12(144) Disclosure of data
95.13(144) Preparation of certified copies
95.14(144) Cancellation of fraudulent records
95.15(144) Unlawful acts
95.16(144) Enforcement assistance

CHAPTER 96
BIRTH REGISTRATION

96.1(144) Definitions
96.2(144) Forms—property of department
96.3(144) Standard birth registration—up to seven days
96.4(144) Standard birth registration—seven days to one year
96.5(144) Birthing institutions
96.6(144) Non-birthing institutions
96.7(144) Non-institution birth
96.8(144) Gestational surrogate arrangement birth registration
96.9(144) Foundling birth registration
96.10(144) Newborn safe haven registration
96.11(144) Birth registration following a foreign-born adoption

96.12(144) Birth registration fees
96.13(144) Fee collection
96.14(144) Waivers
96.15(144) Fee deposit
96.16(144) Responsibilities of institutions
96.17(144) Responsibility for births occurring in non-institutions and non-birthing institutions
96.18(144) Delayed birth registration—one year or more after event

CHAPTER 97
DEATH REGISTRATION AND DISPOSITION OF DEAD HUMAN BODIES

97.1(144) Definitions
97.2(144) Forms—property of department
97.3(144) Standard registration of death—up to one year
97.4(144) Standard registration of fetal death—up to one year
97.5(144) Preparation of the certificate of death or fetal death
97.6(144) Medical certification of death
97.7(144) Medical certification of fetal death
97.8(144) Medical certifier
97.9(144) Report of autopsy findings
97.10(144) Extension of time
97.11(144) Removal of a dead human body or fetus
97.12(144) Burial-transit permit
97.13(144) Transportation and disposition of a dead human body or fetus
97.14(144) Disinterment permits
97.15(144) Delayed death registration—one year or more after event
97.16(144) Registration of presumptive death
97.17(144) Release or final disposition of a dead human body or fetus by an institution
97.18(144) Additional record by funeral director

CHAPTER 98
MARRIAGE REGISTRATION

98.1(144,595) Definitions
98.2(144,595) Forms—property of department
98.3(144,595) Standard registration of marriage—up to one year
98.4(144,595) Application for a license to marry in Iowa
98.5(144,595) License to marry
98.6(144, 595) Certificate of marriage
98.7(144,595) Delayed registration of marriage—one year or more after date of event
98.8(144,595) Dissolution of marriage or annulment

CHAPTER 99
VITAL RECORDS MODIFICATIONS

99.1(144) Definitions
99.2(144) Forms—property of department
99.3(144) Forms used in the establishment of new records
99.4(144) Corrections of minor error in vital record—within one year of event
99.5(144) Amendment of certificate of live birth to add first or middle given name—within one year of event
99.6(144) Amendment of vital record—one year or more after the event
99.7(144) Method of amendment of vital records
99.8(144) Correction or amendment of same item more than once
99.9(144) Other amendments to certificate of live birth
99.10(144) Correction or amendment to medical certification of cause of death

99.11(144) Correction or amendment to a certificate of marriage
99.12(144) Correction to a report of dissolution of marriage or annulment
99.13(144) Minimum information required to establish a new certificate of live birth
99.14(144) Establishment of new certificate of live birth following adoption
99.15(144) Establishment of new certificate of live birth following a birth by gestational surrogate arrangement
99.16(144) Certificate of live birth following voluntary paternity affidavit
99.17(144) Certificate of live birth following court determination of paternity
99.18(144) Certificate of live birth following recision of paternity affidavit or disestablishment of paternity
99.19(144) Certificate of live birth following court-ordered change of name
99.20(144) Certificate of live birth following sex designation change

CHAPTER 100
VITAL RECORDS REGISTRIES AND REPORTS
100.1(144) Definitions
100.2(144) Forms—property of department
100.3(144) Declaration of paternity registry established
100.4(144) Mutual consent voluntary adoption registry established
100.5(144) Statistical report of termination of pregnancy report

CHAPTERS 101 to 107
Reserved

CHAPTER 108
MEDICAL RESIDENCY TRAINING STATE MATCHING GRANTS PROGRAM
108.1(135) Scope and purpose
108.2(135) Definitions
108.3(135) Eligibility criteria
108.4(135) Amount of grant
108.5(135) Review process

CHAPTER 109
PRESCRIPTION DRUG DONATION REPOSITORY PROGRAM
109.1(135M) Definitions
109.2(135M) Purpose
109.3(135M) Eligibility criteria for program participation by medical facilities and pharmacies
109.4(135M) Standards and procedures for accepting donated prescription drugs and supplies
109.5(135M) Standards and procedures for inspecting and storing donated prescription drugs and supplies
109.6(135M) Standards and procedures for dispensing donated prescription drugs and supplies
109.7(135M) Eligibility criteria for individuals to receive donated prescription drugs and supplies
109.8(135M) Forms and record keeping
109.9(135M) Handling fee
109.10(135M) List of drugs and supplies program will accept
109.11(135M) Exemption from disciplinary action, civil liability and criminal prosecution
109.12 and 109.13 Reserved
109.14(135M) Prescription drug donation repository in disaster emergencies

CHAPTER 110
CENTER FOR RURAL HEALTH AND PRIMARY CARE

110.1(135) Purpose and scope
110.2(135) Definitions
110.3(135) Responsibilities of the center
110.4(135) Advisory committee to the center for rural health and primary care
110.5(135) Organization
110.6(135) Meetings
110.7 to 110.10 Reserved

PRIMECARRE COMMUNITY GRANT PROGRAM

110.11(135) Purpose
110.12 to 110.15 Reserved

PRIMECARRE PRIMARY CARE PROVIDER COMMUNITY SCHOLARSHIP PROGRAM

110.16(135) Purpose
110.17 to 110.20 Reserved

PRIMECARRE PRIMARY CARE PROVIDER LOAN REPAYMENT PROGRAM

110.21(135) Purpose

CHAPTER 111
IOWA NEEDS NURSES NOW INFRASTRUCTURE ACCOUNT

111.1(135) Scope and purpose
111.2(135) Definitions
111.3(135) Eligibility and criteria
111.4(135) Review process
111.5(135) Performance standards
111.6(135) Appeals

CHAPTER 112
BIOLOGICAL AGENT RISK ASSESSMENT

112.1(135) Purpose
112.2(135) Definitions
112.3(135) Biosecurity council established
112.4(135) Biological agent risk assessment
112.5(135) Requests for biological agent information
112.6(135) Exceptions

CHAPTER 113
PUBLIC HEALTH RESPONSE TEAMS

113.1(135) Definitions
113.2(135) Purpose
113.3(135) Sponsor agency
113.4(135) Public health response team members
113.5(135) Public health response team
113.6(135) Legal and other protections
113.7(135) Reporting requirements and duties

CHAPTER 114
PREPAREDNESS ADVISORY COMMITTEE

114.1(135) Definitions
114.2(135) Purpose

114.3(135) Appointment
114.4(135) Membership
114.5(135) Officers
114.6(135) Meetings
114.7(135) Subcommittees
114.8(135) Expenses of preparedness advisory committee voting members
114.9(135) Gender balance

CHAPTERS 115 to 123
Reserved

CHAPTER 124
INTERAGENCY COORDINATING COUNCIL
FOR THE STATE MEDICAL EXAMINER

124.1(691) Purpose
124.2(691) Membership
124.3(691) Meetings
124.4(691) Duties
124.5(691) Minutes

CHAPTER 125
ADVISORY COUNCIL FOR THE STATE MEDICAL EXAMINER

125.1(691) Purpose
125.2(691) Membership
125.3(691) Meetings
125.4(691) Duties
125.5(691) Minutes

CHAPTER 126
STATE MEDICAL EXAMINER

126.1(144,331,691) Definitions
126.2 Reserved
126.3(691) Fees for autopsies and related services and reimbursement for related expenses
126.4(691) Fees for tissue recovery

CHAPTER 127
COUNTY MEDICAL EXAMINERS

127.1(144,331,691) Definitions
127.2(331,691) Duties of medical examiners—jurisdiction over deaths which affect the public interest
127.3(331,691) Autopsies
127.4(331,691) Fees
127.5(144,331,691) Death certificates—deaths affecting the public interest
127.6(331,691) Cremation
127.7(331,691) County medical examiner investigators
127.8(331,691) Deputy county medical examiners
127.9(331,691) Failure to comply with rules
127.10(331,691,22) Confidentiality
127.11(331,691,670) Indemnification

CHAPTERS 128 and 129
Reserved

CHAPTER 130
EMERGENCY MEDICAL SERVICES ADVISORY COUNCIL

130.1(147A) Definitions
130.2(147A) Purpose
130.3(147A) Appointment
130.4(147A) Absences
130.5(147A) Officers
130.6(147A) Meetings
130.7(147A) Subcommittees
130.8(147A) Expenses of advisory council members
130.9(147A) Gender balance

CHAPTER 131
EMERGENCY MEDICAL SERVICES—PROVIDER EDUCATION/TRAINING/CERTIFICATION

131.1(147A) Definitions
131.2(147A) Emergency medical care providers—requirements for enrollment in training programs
131.3(147A) Emergency medical care providers—authority
131.4(147A) Emergency medical care providers—certification, renewal standards, procedures, continuing education, and fees
131.5(147A) Training programs—standards, application, inspection and approval
131.6(147A) Continuing education providers—approval, record keeping and inspection
131.7(147A) Complaints and investigations—denial, citation and warning, probation, suspension, or revocation of emergency medical care personnel certificates or renewal
131.8(147A) Complaints and investigations—denial, citation and warning, probation, suspension, or revocation of training program approval or renewal
131.9(147A) Reinstatement of certification
131.10(147A) Certification denial
131.11(147A) Emergency adjudicative proceedings
131.12(147A) Complaints, investigations and appeals

CHAPTER 132
EMERGENCY MEDICAL SERVICES—SERVICE PROGRAM AUTHORIZATION

132.1(147A) Definitions
132.2(147A) Authority of emergency medical care provider
132.3 to 132.6 Reserved
132.7(147A) Service program—authorization and renewal procedures, inspections and transfer or assignment of certificates of authorization
132.8(147A) Service program levels of care and staffing standards
132.9(147A) Service program—off-line medical direction
132.10(147A) Complaints and investigations—denial, citation and warning, probation, suspension or revocation of service program authorization or renewal
132.11 to 132.13 Reserved
132.14(147A) Temporary variances
132.15(147A) Transport options for fully authorized EMT-P, PS, and paramedic service programs

CHAPTER 133
WHITE FLASHING LIGHT AUTHORIZATION

133.1(321) Definitions
133.2(321) Purpose
133.3(321) Application

133.4(321) Approval, denial, probation, suspension and revocation of authorization
133.5(321) Appeal of denial, probation, or revocation of authorization

CHAPTER 134
TRAUMA CARE FACILITY CATEGORIZATION
AND VERIFICATION

134.1(147A) Definitions
134.2(147A) Trauma care facility categorization and verification
134.3(147A) Complaints and investigations and appeals—denial, citation and warning, probation, suspension, and revocation of verification as a trauma care facility

CHAPTER 135
TRAUMA TRIAGE AND TRANSFER PROTOCOLS

135.1(147A) Definitions
135.2(147A) Trauma triage and transfer protocols
135.3(147A) Offenses and penalties

CHAPTER 136
TRAUMA REGISTRY

136.1(147A) Definitions
136.2(147A) Trauma registry
136.3(147A) Offenses and penalties

CHAPTER 137
TRAUMA EDUCATION AND TRAINING

137.1(147A) Definitions
137.2(147A) Initial trauma education for Iowa's trauma system
137.3(147A) Continuing trauma education for Iowa's trauma system
137.4(147A) Offenses and penalties

CHAPTER 138
TRAUMA SYSTEM EVALUATION QUALITY IMPROVEMENT COMMITTEE

138.1(147A) Definitions
138.2(147A) System evaluation quality improvement committee (SEQIC)

CHAPTER 139
IOWA LAW ENFORCEMENT EMERGENCY CARE PROVIDER

139.1(147A) Definitions
139.2(147A) Authority of Iowa law enforcement emergency care provider
139.3(147A) Iowa law enforcement emergency care providers—requirements for enrollment in training programs
139.4(147A) Iowa law enforcement emergency care providers—certification, renewal standards and procedures, and fees
139.5(147A) Iowa law enforcement training programs
139.6(147A) Law enforcement AED service program authorization

CHAPTER 140
EMERGENCY MEDICAL SERVICES SYSTEM DEVELOPMENT GRANTS FUND

140.1(135) Definitions
140.2(135) Purpose
140.3(135) County EMS associations
140.4(135) County EMS system development grants

CHAPTER 141
LOVE OUR KIDS GRANT

141.1(321) Definitions
141.2(321) Purpose
141.3(321) Funding limitations
141.4(321) Use of funds
141.5(321) Application process
141.6(321) Application denial or partial denial—appeal

CHAPTER 142
OUT-OF-HOSPITAL DO-NOT-RESUSCITATE ORDERS

142.1(144A) Definitions
142.2(144A) Purpose
142.3(144A,147A) Responsibilities of the department
142.4(144A,147A) EMS providers
142.5(144A) Guidelines for non-EMS health care providers, patients, and organizations
142.6(144A) Revocation of the out-of-hospital do-not-resuscitate order
142.7(144A) Personal wishes of family members or other individuals who are not authorized to act on the patient's behalf
142.8(144A) Transfer of patients
142.9(144A) Application to existing orders

CHAPTER 143
AUTOMATED EXTERNAL DEFIBRILLATOR PROGRAM

AUTOMATED EXTERNAL DEFIBRILLATOR GRANT PROGRAM

143.1(135) Purpose
143.2(135) Definitions
143.3(135) Application process
143.4(135) Early defibrillation program
143.5(135) Review process
143.6(135) Appeals
143.7 to 143.9 Reserved

AUTOMATED EXTERNAL DEFIBRILLATOR MAINTENANCE

143.10(135) Purpose
143.11(135) Definition
143.12(135) AED maintenance
143.13 to 143.15 Reserved

FIRE DEPARTMENT RESPONSE WITH AUTOMATED EXTERNAL DEFIBRILLATOR

143.16(147A) Purpose
143.17(147A) Definitions
143.18(147A) Local fire department AED service registration

CHAPTER 144
EMERGENCY MEDICAL SERVICES—AIR MEDICAL SERVICE PROGRAM AUTHORIZATION

144.1(147A) Definitions
144.2(147A) Authority of emergency medical care provider
144.3(147A) Air ambulance service program—authorization and renewal procedures, inspections and transfer or assignment of certificates of authorization
144.4(147A) Service program levels of care and staffing standards
144.5(147A) Air ambulance service program—off-line medical direction

144.6(147A) Complaints and investigations—denial, citation and warning, probation, suspension or revocation of service program authorization or renewal
144.7(147A) Temporary variances
144.8(147A) Transport options for air medical services

CHAPTERS 145 to 149
Reserved

CHAPTER 150
IOWA REGIONALIZED SYSTEM OF PERINATAL HEALTH CARE

150.1(135,77GA,ch1221) Purpose and scope
150.2(135,77GA,ch1221) Definitions
150.3(135,77GA,ch1221) Perinatal guidelines advisory committee
150.4(135,77GA,ch1221) Categorization and selection of level of care designation
150.5(135,77GA,ch1221) Recommendation by the statewide perinatal care program
150.6(135,77GA,ch1221) Level I hospitals
150.7(135,77GA,ch1221) Level II hospitals
150.8(135,77GA,ch1221) Level II regional centers
150.9(135,77GA,ch1221) Level II regional neonatology centers
150.10(135,77GA,ch1221) Level III centers
150.11(135,77GA,ch1221) Grant or denial of certificate of verification; and offenses and penalties
150.12(135,77GA,ch1221) Prohibited acts
150.13(135,77GA,ch1221) Construction of rules

CHAPTER 151
TOBACCO USE PREVENTION AND CONTROL
COMMUNITY PARTNERSHIP INITIATIVE

151.1(142A) Scope
151.2(142A) Community partnership areas
151.3(142A) Community partnerships
151.4(142A) Application requirements for community partnerships
151.5(142A) Performance indicators
151.6(142A) Application deadline
151.7(142A) Distribution of funding
151.8(142A) Gifts

CHAPTER 152
TOBACCO USE PREVENTION AND CONTROL FUNDING PROCESS

152.1(78GA,HF2565) Scope and purpose
152.2(78GA,HF2565) Funding
152.3(78GA,HF2565) Appeals

CHAPTER 153
SMOKEFREE AIR

153.1(82GA,HF2212) Purpose and scope
153.2(82GA,HF2212) Definitions
153.3(82GA,HF2212) Prohibition of smoking
153.4(82GA,HF2212) Areas where smoking not regulated
153.5(82GA,HF2212) Duties of employers, owners, operators, managers, and persons having custody or control of a public place, place of employment, area declared nonsmoking pursuant to 2008 Iowa Acts, House File 2212, section 5, or outdoor areas where smoking is prohibited
153.6(82GA,HF2212) Duties of other state agencies and political subdivisions

153.7(82GA,HF2212) Leases
153.8(82GA,HF2212) Complaints and enforcement
153.9(82GA,HF2212) Limitation of rules

CHAPTER 154
MEDICAL CANNABIDIOL ACT REGISTRATION CARD PROGRAM

154.1(85GA,SF2360) Definitions
154.2(85GA,SF2360) Neurologist recommendation—medical use of cannabidiol
154.3(85GA,SF2360) Cannabidiol registration card—application and issuance to patient
154.4(85GA,SF2360) Cannabidiol registration card—application and issuance to primary caregiver
154.5(85GA,SF2360) Tamperproofing
154.6(85GA,SF2360) Denial and cancellation
154.7(85GA,SF2360) Appeal
154.8(85GA,SF2360) Duplicate card
154.9(85GA,SF2360) Renewal
154.10(85GA,SF2360) Confidentiality
154.11(85GA,SF2360) Agreement with department of transportation

CHAPTER 155
LICENSURE STANDARDS FOR SUBSTANCE ABUSE AND PROBLEM GAMBLING TREATMENT PROGRAMS

155.1(125,135) Definitions
155.2(125,135) Licensing
155.3(125,135) Type of licenses
155.4(125,135) Nonassignability; program closure
155.5(125,135) Application procedures
155.6(125,135) Application review
155.7(125,135) Inspection of licensees
155.8(125,135) Licenses—renewal
155.9(125,135) Corrective action plan
155.10(125,135) Grounds for denial of initial license
155.11(125,135) Suspension, revocation, or refusal to renew a license
155.12(125,135) Contested case hearing
155.13(125,135) Rehearing application
155.14(125,135) Judicial review
155.15(125,135) Reissuance or reinstatement
155.16(125,135) Complaints and investigations
155.17 Reserved
155.18(125,135) Deemed status
155.19(125,135) Funding
155.20(125,135) Inspection
155.21(125,135) General standards for all treatment programs
155.22(125,135) Inpatient, residential, and halfway house safety
155.23(125,135) Specific standards for inpatient, residential, and halfway house service
155.24(125,135) Specific standards for inpatient, residential, and halfway house services for juveniles
155.25(125,135) Specific standards for assessment and evaluation programs
155.26 to 155.34 Reserved
155.35(125,135) Specific standards for opioid treatment programs

TUBERCULOSIS (TB) SCREENING:
HEALTH CARE WORKERS AND RESIDENTS

155.36(125,135) Purpose
155.37(125,135) Definitions
155.38(125,135) Tuberculosis screening of staff and residents

CHAPTER 156
LICENSURE STANDARDS FOR SUBSTANCE ABUSE TREATMENT PROGRAMS
IN CORRECTIONAL FACILITIES

156.1(125) Definitions
156.2(125) Inspection
156.3(125) General standards for all correctional substance abuse treatment programs

CHAPTER 157
STANDARDS FOR SUBSTANCE ABUSE TREATMENT AND
ASSESSMENT PROGRAMS AND THE OPERATING A MOTOR VEHICLE
WHILE INTOXICATED (OWI) LAW

157.1(125) Definitions
157.2(125) Screening, evaluation, treatment, and drinking drivers course
157.3(125) Screening, evaluation, treatment, and drinking drivers course completion
157.4(125) Cost of evaluation and treatment
157.5(125) Timeliness
157.6(125) Confidentiality
157.7(125) Records
157.8(125) Reciprocity

CHAPTER 158
REGIONS FOR SUBSTANCE ABUSE PREVENTION AND TREATMENT

158.1(125) Service areas established
158.2(125) Request for a change in service areas
158.3(125) Application
158.4(125) Notification of affected parties
158.5(125) Public hearing
158.6(125) Proposed decision
158.7(125) Change during term of contract
158.8(125) State board of health review
158.9(125) State board of health decision

CHAPTERS 159 to 169
Reserved

CHAPTER 170
ORGANIZATION OF THE DEPARTMENT

170.1(17A,135) Definitions
170.2(17A,135) Mission
170.3(17A,136) State board of health
170.4(17A,135) Director of the department of public health
170.5(17A,135) Deputy director
170.6(17A,135) Executive team
170.7(17A,135) Administrative divisions of the department
170.8(17A) Central office
170.9(17A) Business hours
170.10(17A) Submission of materials
170.11(17A) Requests for information

CHAPTER 171
PETITIONS FOR RULE MAKING

171.1(17A) Petition for rule making
171.2(17A) Briefs
171.3(17A) Inquiries
171.4(17A) Department consideration

CHAPTER 172
DECLARATORY ORDERS

172.1(17A) Petition for declaratory order
172.2(17A) Notice of petition
172.3(17A) Intervention
172.4(17A) Briefs
172.5(17A) Inquiries
172.6(17A) Service and filing of petitions and other papers
172.7(17A) Consideration
172.8(17A) Action on petition
172.9(17A) Refusal to issue order
172.10(17A) Contents of declaratory order—effective date
172.11(17A) Copies of orders
172.12(17A) Effect of a declaratory order

CHAPTER 173
CONTESTED CASES

173.1(17A) Scope and applicability
173.2(17A) Definitions
173.3(17A) Time requirements
173.4(17A) Requests for contested case proceeding
173.5(17A) Notice of hearing
173.6(17A) Presiding officer
173.7(17A) Waiver of procedures
173.8(17A) Telephone proceedings
173.9(17A) Disqualification
173.10(17A) Consolidation—severance
173.11(17A) Pleadings
173.12(17A) Service and filing of pleadings and other papers
173.13(17A) Discovery
173.14(17A,135) Subpoenas
173.15(17A) Motions
173.16(17A) Prehearing conference
173.17(17A) Continuances
173.18(17A) Withdrawals
173.19(17A) Intervention
173.20(17A) Hearing procedures
173.21(17A) Evidence
173.22(17A) Default
173.23(17A) Ex parte communication
173.24(17A) Recording costs
173.25(17A) Interlocutory appeals
173.26(17A) Final decision
173.27(17A) Appeals and review
173.28(17A) Applications for rehearing

173.29(17A) Stays of department actions
173.30(17A) No factual dispute contested cases
173.31(17A) Emergency adjudicative proceedings

CHAPTER 174
AGENCY PROCEDURE FOR RULE MAKING
(Uniform Rules)

174.3(17A) Public rule-making docket
174.4(17A) Notice of proposed rule making
174.5(17A) Public participation
174.6(17A) Regulatory flexibility analysis
174.11(17A) Concise statement of reasons
174.13(17A) Agency rule-making record

CHAPTER 175
FAIR INFORMATION PRACTICES AND PUBLIC RECORDS

175.1(17A,22) Definitions
175.2(17A,22) Statement of policy
175.3(17A,22) Requests for access to records
175.4(17A,22) Access to confidential records
175.5(17A,22) Requests for treatment of a record as a confidential record and its withholding from examination
175.6(17A,22) Procedure by which additions, dissents, or objections may be entered into certain records
175.7(17A,22) Consent to disclosure by the subject of a confidential record
175.8(17A,22) Notice to suppliers of information
175.9(17A,22) Disclosures without the consent of the subject
175.10(17A,22) Routine use
175.11(17A,22) Consensual disclosure of confidential records
175.12(17A,22) Release to subject
175.13(17A,22) Availability of records
175.14(17A,22) Personally identifiable information
175.15(17A,22) Other groups of records
175.16(17A,22) Data processing systems
175.17(17A,22) Applicability

CHAPTER 176
CRITERIA FOR AWARDS OR GRANTS

176.1(135,17A) Purpose
176.2(135,17A) Definitions
176.3(135,17A) Exceptions
176.4(135,17A) Requirements
176.5(135,17A) Review process (competitive applications only)
176.6 Reserved
176.7(135,17A) Public notice of available funds
176.8(135,17A) Appeals

CHAPTER 177
HEALTH DATA

177.1(76GA,ch1212) Purpose
177.2(76GA,ch1212) Definitions
177.3(76GA,ch1212) Description of data to be submitted
177.4(76GA,ch1212) Department studies

177.5(76GA,ch1212) Fees
177.6(76GA,ch1212) Patient confidentiality
177.7(76GA,ch1212) Department contracting
177.8(76GA,ch1212) Address and specification for data submissions

CHAPTER 178
VARIANCES AND WAIVERS OF PUBLIC HEALTH
ADMINISTRATIVE RULES

178.1(17A,135) Waivers
178.2(17A,135) Sample petition for waiver

CHAPTERS 179 to 185
Reserved

CHAPTER 186
GOVERNMENTAL PUBLIC HEALTH ADVISORY BODIES

186.1(135A) Purpose
186.2(135A) Definitions
186.3(135A) Roles and responsibilities of advisory bodies
186.4(135A) Officers
186.5(135A) Members of advisory bodies
186.6(135A) Meetings
186.7(135A) Conflict of interest
186.8(135A) Subcommittees

CHAPTERS 187 to 190
Reserved

CHAPTER 191
ADVISORY BODIES OF THE DEPARTMENT

191.1(135) Definitions
191.2(135) Purpose
191.3(135) Appointment
191.4(135) Officers
191.5(135) Meetings
191.6(135) Subcommittees
191.7(135) Expenses of advisory body members
191.8(135) Gender balance

CHAPTER 192
CHILD SUPPORT NONCOMPLIANCE

192.1(252J) Definitions
192.2(252J) Issuance or renewal of a license—denial
192.3(252J) Suspension or revocation of a license
192.4(17A,22,252J) Sharing of information

CHAPTER 193
IMPAIRED PRACTITIONER REVIEW COMMITTEE

193.1(272C) Definitions
193.2(272C) Purpose
193.3(272C) Composition of the committee
193.4(272C) Eligibility
193.5(272C) Terms of participation in the impaired practitioner recovery program

193.6(272C) Limitations
193.7(272C) Confidentiality

CHAPTER 194
NONPAYMENT OF STATE DEBT

194.1(272D) Definitions
194.2(272D) Issuance or renewal of a license—denial
194.3(272D) Suspension or revocation of a license
194.4(272D) Sharing of information

CHAPTER 195
STUDENT LOAN DEFAULT/NONCOMPLIANCE WITH AGREEMENT
FOR PAYMENT OF OBLIGATION

195.1(261) General definitions
195.2(261) Issuance or renewal of a license—denial
195.3(261) Suspension or revocation of a license
195.4(17A,22,261) Sharing of information

CHAPTER 196
MILITARY SERVICE AND VETERAN RECIPROCITY

196.1(85GA,ch1116) Definitions
196.2(85GA,ch1116) Military education, training, and service credit
196.3(85GA,ch1116) Veteran reciprocity

CHAPTERS 197 to 200
Reserved

CHAPTER 201
ORGANIZED DELIVERY SYSTEMS

LICENSURE AND REGULATION

201.1(135,75GA,ch158) Purpose and scope
201.2(135,75GA,ch158) Definitions
201.3(135,75GA,ch158) Application
201.4(135,75GA,ch158) Governing body
201.5(135,75GA,ch158) Service area/geographic access
201.6(135,75GA,ch158,78GA,ch41) Provider network and contracts; treatment and services
201.7(135,75GA,ch158) Complaints
201.8(135,75GA,ch158) Accountability
201.9(135,75GA,ch158) Reporting
201.10(135,75GA,ch158) Evaluation
201.11(135,75GA,ch158) Annual report
201.12(135,75GA,ch158) Finance and solvency
201.13(135,75GA,ch158) Investment
201.14(135,75GA,ch158) Rating practices
201.15(135,75GA,ch158) Name
201.16(135,75GA,ch158) Change in organizational documents or control
201.17(135,75GA,ch158) Appeal
201.18(135,78GA,ch41) External review
201.19 Reserved

ANTITRUST

201.20(135,75GA,ch158) Purpose
201.21(135,75GA,ch158) Definitions
201.22(135,75GA,ch158) Scope

201.23(135,75GA,ch158) Application
201.24(135,75GA,ch158) Notice and comment
201.25(135,75GA,ch158) Procedure for review of applications
201.26(135,75GA,ch158) Criteria for decision
201.27(135,75GA,ch158) Decision
201.28(135,75GA,ch158) Appeal
201.29(135,75GA,ch158) Supervision after approval
201.30(135,75GA,ch158) Revocation

CHAPTER 202
CERTIFICATE OF NEED PROGRAM

202.1(135) Definitions
202.2(135) Letter of intent
202.3(135) Determination of reviewability
202.4(135) Submission of application
202.5(135) Organizational procedures
202.6(135) Public hearing on application
202.7(135) Summary review
202.8(135) Extension of review time
202.9(135) Rehearing of certificate of need decision
202.10(135) Status reports to affected persons
202.11(135) Finality
202.12(135) Project progress reports
202.13(135) Request for extension of certificate
202.14(135) Application changes after approval
202.15(135) Sanctions
202.16(135) Reporting requirements

CHAPTER 203
STANDARDS FOR CERTIFICATE OF NEED REVIEW

203.1(135) Acute care bed need
203.2(135) Cardiac catheterization and cardiovascular surgery standards
203.3(135) Radiation therapy or radiotherapy standards
203.4(135) Computerized tomography standards
203.5(135) Long-term care
203.6(135) Bed need formula for mentally retarded
203.7(135) End-stage renal disease standards
203.8(135) Financial and economic feasibility
203.9(135) Obstetrical services and neonatal intensive care unit standards
203.10(135) Designated pediatric units standards
203.11(135) Designated inpatient substance abuse treatment unit standards
203.12(135) Magnetic resonance imaging services standards
203.13(135) Positron emission tomography services standards

CHAPTERS 204 and 205
Reserved

CHAPTER 206
IOWA HEALTH INFORMATION NETWORK

206.1(135) Scope and applicability
206.2(135) Definitions
206.3(135) Policy development and governance
206.4(135) Monitoring and audit

206.5(135) Consumer participation in the Iowa health information network
206.6(135) Security incidents, breaches
206.7(135) Health information audit

CHAPTER 1
REPORTABLE DISEASES, POISONINGS AND CONDITIONS, AND QUARANTINE AND ISOLATION

641—1.1(139A) Definitions. For the purpose of these rules, the following definitions shall apply:

"Acute or chronic respiratory conditions due to fumes, vapors or dusts" means acute chemical bronchitis; any acute, subacute, or chronic respiratory condition due to inhalation of a chemical fume or vapor; or pneumoconioses not specifically listed elsewhere in these rules. (ICD-10 codes J63.0 to J64, J66, and J68.0 to J68.9) "Acute or chronic respiratory conditions due to fumes, vapors or dusts" excludes those respiratory conditions related to tobacco smoke exposure.

"Agriculturally related injury" means any nonhousehold injury to a farmer, farm worker, farm family member, or other individual, which occurred on a farm, or in the course of handling, producing, processing, transporting or warehousing farm commodities.

"AIDS" means AIDS as defined in Iowa Code section 141A.1.

"Area quarantine" means prohibiting ingress to and egress from a building or buildings, structure or structures, or other definable physical location, or portion thereof, to prevent or contain the spread of a suspected or confirmed quarantinable disease or to prevent or contain exposure to a suspected or known chemical, biological, radioactive, or other hazardous or toxic agent.

"Business" means and includes every trade, occupation, or profession.

"Care provider" means an individual who is trained and authorized by federal or state law to provide health care services or services of any kind in the course of the individual's official duties, for compensation or in a voluntary capacity, who is a health care provider, emergency medical care provider as defined in Iowa Code section 147A.1, firefighter, or peace officer. "Care provider" also means an individual who renders emergency care or assistance in an emergency or due to an accident as described in Iowa Code section 613.17.

"Case" means an individual who has confirmatory evidence of disease.

"Clinical laboratory" means any laboratory performing analyses on specimens taken from the body of a person in order to assess that person's health status.

"Communicable disease" means any disease spread from person to person or animal to person.

"Congenital or inherited disorder" means congenital or inherited disorder as defined in Iowa Code section 136A.2.

"Contagious or infectious disease" means hepatitis in any form, meningococcal disease, tuberculosis, and any other disease, with the exception of AIDS or HIV infection as defined in Iowa Code section 141A.1, determined to be life-threatening to a person exposed to the disease based upon a determination by the state public health medical director and epidemiologist and in accordance with guidelines of the Centers for Disease Control and Prevention of the United States Department of Health and Human Services.

"Department" means the Iowa department of public health.

"Designated officer" means a person who is designated by a department, agency, division, or service organization to act as an infection control liaison officer.

"Director" means the director of the Iowa department of public health.

"Exposure" means the risk of contracting disease.

"Fetal death" means an unintended death occurring after a gestation period of 20 completed weeks, or an unintended death of a fetus with a weight of 350 or more grams. "Fetal death" is synonymous with stillbirth.

"HBV" means hepatitis B virus.

"Health care facility" means a health care facility as defined in Iowa Code section 135C.1, an ambulatory surgical center, or a clinic.

"Health care provider" means a person licensed to practice medicine and surgery, osteopathic medicine and surgery, osteopathy, chiropractic, podiatry, nursing, dentistry, optometry, or licensed as a physician assistant, dental hygienist, or acupuncturist.

"HIV" means HIV as defined in Iowa Code section 141A.1.

"Hospital" means hospital as defined in Iowa Code section 135B.1.

"Hypersensitivity pneumonitis" means a disease in which the air sacs (alveoli) of the lungs become inflamed when certain dusts are inhaled to which the person is sensitized or allergic. "Hypersensitivity pneumonitis" includes but is not limited to farmer's lung, silo filler's disease, and toxic organic dust syndrome.

"IDSS" means the Iowa disease surveillance system, a secure Web-based statewide disease reporting and surveillance system.

"Infectious disease" means a disease caused by the entrance into the body of organisms, including but not limited to bacteria, protozoans, fungi, prions, or viruses which grow and multiply.

"Infectious tuberculosis" means pulmonary or laryngeal tuberculosis as evidenced by:

1. Isolation of M. tuberculosis complex (positive culture) from a clinical specimen or positive nucleic acid amplification test, or

2. Both radiographic evidence of tuberculosis, such as an abnormal chest X-ray, and clinical evidence, such as a positive skin test or whole blood assay test for tuberculosis infection, coughing, sputum production, fever, or other symptoms compatible with infectious tuberculosis that lead a physician to diagnose infectious tuberculosis according to currently acceptable standards of medical practice and to initiate treatment for tuberculosis.

"Injury" means physical damage or harm to the body as the result of an act or event.

"Investigation" means an inquiry conducted to determine the specific source, mode of transmission, and cause of a disease or suspected disease occurrence and to determine the specific incidence, prevalence, and extent of the disease in the affected population. "Investigation" may also include the application of scientific methods and analysis to institute appropriate control measures.

"Isolation" means the separation of persons or animals presumably or actually infected with a communicable disease, or that are disease carriers, for the usual period of communicability of that disease. Isolation shall be in such places, marked by placards if necessary, and under such conditions to prevent the direct or indirect conveyance of the infectious agent or contagion to susceptible persons.

"Local board" means the local board of health.

"Local department" means the local health department.

"Noncommunicable respiratory illnesses" means an illness indicating prolonged exposure or overexposure to asbestos, silica, silicates, aluminum, graphite, bauxite, beryllium, cotton dust or other textile material, or coal dust. "Noncommunicable respiratory illnesses" includes, but is not limited to asbestosis, coal worker's pneumoconiosis, and silicosis.

"Occupationally related asthma, bronchitis or respiratory hypersensitivity reaction" means any extrinsic asthma or acute chemical pneumonitis due to exposure to toxic agents in the workplace. (ICD-10 codes J67.0 to J67.9)

"Pesticide" means (1) any substance or mixture of substances intended for preventing, destroying, repelling, or mitigating directly or indirectly any insects, rodents, nematodes, fungi, weeds, and other forms of plant or animal life or viruses, except viruses on or in living persons, which the Iowa secretary of agriculture shall declare to be a pest; and (2) any substances intended for use as a plant growth regulator, defoliant, or desiccant. Pesticides include active and inert ingredients of herbicides, insecticides, rodenticides, repellants, fumigants, fungicides, wood treatment products, and disinfectants as well as adjuvants that are added to a pesticide formulation to improve or change properties such as deposition, persistence, or mixing ability.

"Pesticide poisoning" means any acute or subacute systemic, ophthalmologic, or dermatologic illness or injury resulting from or suspected of resulting from inhalation or ingestion of, dermal exposure to, or ocular contact with a pesticide. Laboratory confirmation is not required.

"Placard" means a warning sign to be erected and displayed on the periphery of a quarantine area, forbidding entry to or exit from the area.

"Poison control or poison information center" means any organization or program which has as one of its primary objectives the provision of toxicologic and pharmacologic information and referral services to the public and to health care providers (other than pharmacists) in response to inquiries about actual or potential poisonings.

"Public health disaster" means an incident as defined in Iowa Code section 135.140.

"Quarantinable disease" means any communicable disease which presents a risk of serious harm to public health and which may require isolation or quarantine to prevent its spread. "Quarantinable disease" includes but is not limited to cholera; diphtheria; infectious tuberculosis; plague; smallpox; yellow fever; viral hemorrhagic fevers, including Lassa, Marburg, Ebola, Crimean-Congo, South American, and others not yet isolated or named; novel influenza; and severe acute respiratory syndrome (SARS).

"Quarantine" means the limitation of freedom of movement of persons or animals that have been exposed to a quarantinable disease within specified limits marked by placards for a period of time equal to the longest usual incubation period of the disease in such manner as to prevent the spread of a quarantinable disease which affects people.

"Reportable cancers" means those cancers included in the National Cancer Institute's Surveillance, Epidemiology and End Results (SEER) Program.

"Reportable disease" means any disease designated by this chapter.

"Severe skin disorder" means those dermatoses, burns, and other severe skin disorders which result in death or which require hospitalization or other multiple courses of medical therapy.

"Sexually transmitted disease or infection" means a disease or infection as identified by this chapter that is transmitted through sexual practices. "Sexually transmitted disease or infection" includes, but is not limited to, acquired immunodeficiency syndrome (AIDS), chlamydia, gonorrhea, hepatitis B and hepatitis C, human immunodeficiency virus (HIV), human papillomavirus, and syphilis.

"Suspected case" means an individual that presents with clinical signs or symptoms indicative of a reportable or quarantinable disease.

"Toxic agent" means any noxious substance in solid, liquid or gaseous form capable of producing illness in humans including, but not limited to, pesticides, heavy metals, organic and inorganic dusts and organic solvents. Airborne toxic agents may be in the form of dusts, fumes, vapors, mists, gases or smoke.

"Toxic hepatitis" means any acute or subacute necrosis of the liver or other unspecified chemical hepatitis caused by exposure to nonmedicinal toxic agents other than ethyl alcohol including, but not limited to, carbon tetrachloride, chloroform, tetrachloroethane, trichloroethylene, phosphorus, trinitrotoluene (TNT), chloronapthalenes, methylenedianilines, ethylene dibromide, and organic solvents. (ICD-10 codes K71.0 to K71.9)

[**ARC 8231B**, IAB 10/7/09, effective 11/11/09]

641—1.2(139A) Purpose and authority.

1.2(1) *Purpose.* The purpose of this chapter is to establish rules that identify diseases, poisonings and conditions, and incidents that are to be reported to the department in accordance with Iowa Code chapters 135, 136A, 139A, 141A, and 144. These rules also establish the information to be reported, how and when to report, and who is to report. This chapter provides for disease investigation and disease control through preventive measures including but not limited to quarantine and isolation.

1.2(2) *Authority.* The director is the principal officer of the state to administer disease, poisoning and condition, and incident reporting and control. The State Health Registry of Iowa, administered by the Department of Epidemiology of the College of Public Health at the University of Iowa, is a public health authority for purposes of collecting cancer data in accordance with this chapter.

[**ARC 8231B**, IAB 10/7/09, effective 11/11/09]

REPORTABLE COMMUNICABLE AND INFECTIOUS DISEASES

641—1.3(139A,141A) Reportable communicable and infectious diseases. Reportable communicable and infectious diseases are those listed in Appendix A. The director may also designate any disease, poisoning or condition or syndrome temporarily reportable for the purpose of a special investigation.

[**ARC 8231B**, IAB 10/7/09, effective 11/11/09]

641—1.4(135,139A) Reporting of reportable communicable and infectious diseases. Each case of a reportable disease is required to be reported to the Iowa Department of Public Health, Lucas State Office Building, 321 E. 12th Street, Des Moines, Iowa 50319-0075, in a manner specified by this chapter.

1.4(1) *Who is required to report communicable and infectious diseases.*

a. Health care providers, hospitals, clinical laboratories, and other health care facilities are required to report cases of reportable communicable and infectious diseases. Health care providers and hospitals are exempted from reporting communicable and infectious disease laboratory results if the health care provider or hospital ensures that the laboratory performing the analysis provides a report containing the required information to the department.

b. School nurses are required to report suspected cases of reportable diseases occurring among the children supervised.

c. School officials, through the principal or superintendent as appropriate, are required to report when there is no school nurse.

d. Laboratories are required to report cases of reportable diseases and results obtained in the examination of all specimens which yield evidence of or are reactive for sexually transmitted diseases.

e. Poison control and poison information centers are required to report inquiries about cases of reportable diseases received by them.

f. Medical examiners are required to report their investigatory findings of any death which was caused by or otherwise involved a reportable disease.

g. Occupational nurses are required to report cases of reportable diseases.

h. Hospitals, health care providers and clinical laboratories outside the state of Iowa shall immediately report any confirmed or suspect case of a reportable disease, poisoning or condition in an Iowa resident.

1.4(2) *What to report.* Each report shall contain all of the following information:

a. The patient's name.

b. The patient's address.

c. The patient's date of birth.

d. The sex of the patient.

e. The race and ethnicity of the patient.

f. The patient's marital status.

g. The patient's telephone number.

h. The name and address of the laboratory.

i. The date the test was found to be positive and the collection date.

j. The name and address of the health care provider who performed the test

k. If the patient is female, whether the patient is pregnant.

l. The name of the reportable disease.

1.4(3) *How to report.*

a. *Immediate reporting by telephone of diseases identified in Appendix A as immediately reportable.* A health care provider and a public, private, or hospital clinical laboratory shall immediately report any confirmed or suspected case of a disease identified in Appendix A as immediately reportable to the department's disease notification hotline at 1-800-362-2736. The report shall include all information required by 1.4(2) and the following:

(1) The stage of the disease process.

(2) Clinical status.

(3) Any treatment provided for the disease.

(4) All household and other known contacts.

(5) Whether household and other known contacts have been examined and the results of such examinations.

b. *Other diseases that carry serious consequences or spread rapidly.* A health care facility, health care provider and a public, private, or hospital clinical laboratory shall immediately report any confirmed or suspected case of a common source epidemic or disease outbreak of unusual numbers by telephone to the department's 24/7 disease reporting telephone hotline at 1-800-362-2736.

c. *Reporting of other reportable diseases.* Cases of other reportable communicable or infectious diseases not included in 1.4(3)*"a"* shall be reported to the department in accordance with Appendix A by mail, telephone, facsimile, or other secure electronic means. The preferred method is secure Web-based reporting when available. If the department determines that reporting by mail hinders the application of organized control measures to protect the public health, the department may require that the reportable disease be reported by telephone, facsimile or secure Web-based reporting.

1.4(4) *Contagious or infectious disease notification at time of death.* The purpose of this subrule is to establish contagious or infectious disease notification requirements for the information of any person handling a dead body.

a. A health care provider attending a person prior to the person's death shall, at the time of death, place with the body a written notice which specifies or signifies either "known contagious or infectious disease" or "suspected contagious or infectious disease."

b. The health care facility in which the health care provider is working shall be responsible for establishing written procedures and implementing the specific internal practices necessary to satisfy this notification requirement.

[**ARC 8231B**, IAB 10/7/09, effective 11/11/09; **ARC 0754C**, IAB 5/29/13, effective 7/3/13]

REPORTABLE POISONINGS AND CONDITIONS—NONCOMMUNICABLE

641—1.5(139A,135) Reportable poisonings and conditions. Reportable poisonings and conditions are those listed in Appendix B. The director may also designate any disease, poisoning or condition or syndrome temporarily reportable for the purpose of a special investigation.

[**ARC 8231B**, IAB 10/7/09, effective 11/11/09]

641—1.6(135,139A) Reporting poisonings and conditions.

1.6(1) *Who is required to report.*

a. Health care providers, hospitals, and clinical laboratories and other health care facilities are required to report cases of reportable poisonings and conditions. Health care providers are exempted from reporting blood lead testing if the laboratory performing the analysis provides the report containing the required information to the department.

b. School nurses are required to report suspected cases of a reportable poisoning or condition occurring among the children supervised.

c. School officials, through the principal or superintendent as appropriate, are required to report when there is no school nurse.

d. Poison control and poison information centers are required to report inquiries about cases of a reportable poisoning or condition received by them.

e. Medical examiners are required to report their investigatory findings of any death which was caused by or otherwise involved a reportable poisoning or condition.

f. Occupational nurses are required to report cases of reportable poisonings and conditions.

g. Hospitals, health care providers and clinical laboratories outside the state of Iowa shall immediately report any confirmed or suspected case of a reportable poisoning or condition in an Iowa resident.

1.6(2) *What to report.* Each report shall contain all of the following information:

a. The patient's name.

b. The patient's address.

c. The patient's date of birth.

d. The sex of the patient.

e. The race and ethnicity of the patient.

f. The patient's marital status.

g. The patien's telephone number.

h. The name and address of the laboratory.

i. The collection date.

j. The analytical result.

k. In the case of blood lead testing, whether the sample is a capillary or venous blood sample.

l. For conditions not identified by a laboratory analysis, the date that the condition was diagnosed.

m. The name and address of the health care provider who performed the test.

n. If the patient is female, whether the patient is pregnant.

o. In the case of occupational conditions, the name of the patient's employer.

1.6(3) *How to report.*

a. Blood lead testing. All analytical results greater than or equal to 20 micrograms per deciliter (µg/dL) in a child under the age of six years or a pregnant woman shall be reported to the department immediately by telephone at 1-800-972-2026. All other analytical results shall be reported to the department at least weekly in an electronic format specified by the department.

b. Each instance of carbon monoxide poisoning shall be reported to the department immediately by telephone at 1-800-972-2026.

c. Reportable poisonings and conditions other than blood lead testing and carbon monoxide poisoning shall be reported to the department in accordance with Appendix B.

d. Occupational nurses shall submit cases of occupationally related reportable poisonings or conditions on report forms provided by the department.

[**ARC 8231B**, IAB 10/7/09, effective 11/11/09]

INVESTIGATION

641—1.7(135,139A) Investigation of reportable diseases. A health care provider and a public, private, or hospital clinical laboratory shall assist in a disease investigation conducted by the department, a local board, or a local department.

1.7(1) A health care provider and a clinical laboratory shall provide the department, local board, or local department with all information necessary to conduct the investigation, including but not limited to medical records; exposure histories; medical histories; contact information; and test results necessary to the investigation, including positive, pending, and negative test results.

1.7(2) Issuance of investigatory subpoenas.

a. The department may upon the written request of a local board of health, the state public health medical director and epidemiologist or designee, or the state public health veterinarian or designee, subpoena records, reports, or any other evidence necessary to conduct a disease investigation. The subpoena shall be signed by the division director of the division of acute disease prevention and emergency response or the division director's designee following review and approval of the written request for subpoena.

b. A written request for a subpoena shall contain the following:

(1) The name and address of the person, facility, or entity to which the subpoena will be directed;

(2) A specific description of the records, reports, or other evidence requested; and

(3) An explanation of why the documents sought to be subpoenaed are necessary for the department to conduct the disease investigation.

c. Each subpoena shall contain:

(1) The name and address of the person, facility, or entity to which the subpoena is directed;

(2) A description of the records, reports, or other evidence requested;

(3) The date, time, and location for production, inspection, or copying;

(4) The time within which a motion to quash or modify the subpoena must be filed;

(5) The signature, address, and telephone number of the division director;

(6) The date of issuance; and

(7) A return of service.

d. Process to challenge a subpoena.

(1) Any person who is aggrieved or adversely affected by compliance with the subpoena and who desires to challenge the subpoena must, within five days after service of the subpoena, or before the time specified for compliance if such time is less than five days, file with the department a motion to quash

or modify the subpoena. The motion shall describe the reasons why the subpoena should be quashed or modified, and may be accompanied by legal briefs or factual affidavits.

(2) Upon receipt of a timely motion to quash or modify a subpoena, the department may request an administrative law judge to issue a decision. Oral argument may be scheduled at the discretion of the administrative law judge. The administrative law judge may quash or modify the subpoena, deny the motion, or issue an appropriate protective order.

(3) A person aggrieved by a ruling of an administrative law judge who desires to challenge that ruling must appeal the ruling to the department by serving on the department director, either in person or by certified mail, a notice of appeal within ten days after the service of the decision of the administrative law judge. The department director's decision is final for purposes of judicial review.

e. Subpoenas issued under this subrule and requests, motions, and pleadings related to the issuance of subpoenas are confidential pursuant to Iowa Code sections 139A.3 and 22.7.

[**ARC 8231B**, IAB 10/7/09, effective 11/11/09]

ISOLATION AND QUARANTINE

641—1.8(139A) Isolation and quarantine. Isolation and quarantine should be consistent with guidelines provided by the Centers for Disease Control and Prevention's 2007 Guideline for Isolation Precautions: Preventing Transmission of Infectious Agents in Healthcare Settings, June 2007; http://www.cdc.gov/ncidod/dhqp/pdf/guidelines/Isolation2007.pdf.

[**ARC 8231B**, IAB 10/7/09, effective 11/11/09]

641—1.9(135,139A) Quarantine and isolation.

1.9(1) *Examination, testing, and treatment of quarantinable diseases.*

a. A health care provider who attends an individual with a suspected or active quarantinable disease shall make all reasonable efforts in accordance with guidance from a local health department or the department to examine or cause all household and other known contacts of the individual to be examined by a physician. The physician shall promptly report to the department the results of such examination. If the individual refuses or is unable to undergo examination, the health care provider shall promptly report such information to the department.

b. When required by the department, all contacts not examined by a physician, including all adult and minor contacts, shall submit to a diagnostic test or tests. If any suspicious abnormality is found, steps satisfactory to the department shall be taken to refer the individual promptly to a physician or appropriate medical facility for further evaluation and, if necessary, treatment. The referring health care provider or facility shall notify the receiving health care provider or facility of the suspicious abnormality. When requested by the department, a physician shall report the results of the examination of a contact to the case or suspected case or incident.

c. Upon order of the department or local board of health, an individual with a suspected or active quarantinable disease shall not attend the workplace or school and shall not be present at other public places until the individual receives the approval of the department or a local board of health to engage in such activity. Upon order of the department or local board of health, employers, schools and other public places shall exclude an individual with a suspected or active quarantinable disease. An individual may also be excluded from other premises or facilities if the department or a local board of health determines the premises or facilities cannot be maintained in a manner adequate to protect others against the spread of the disease.

d. A person diagnosed with or clinically suspected of having infectious tuberculosis shall complete voluntary treatment until, in the opinion of the attending physician or the state public health medical director and epidemiologist, the person's tuberculosis is cured or such person is no longer a threat to public health. If such person refuses to complete the course of voluntary treatment, the department or local board of health may issue an order compelling mandatory treatment. Such order shall include the identity of the person subject to the mandatory treatment order, a description of the treatment ordered, the medical basis upon which the treatment is ordered, and a description of the potential medical and legal consequences of violating such order. A person who violates a mandatory treatment order may

be subject to the penalties provided in Iowa Code section 135.38 or 137.21 and may be placed under mandatory quarantine or isolation in accordance with the provisions of this chapter.

e. A person diagnosed with extrapulmonary tuberculosis or clinically suspected of having infectious tuberculosis who fails to comply with a physician's recommendation for diagnostic testing may be ordered to undergo diagnostic testing by the department or local board of health. Such order shall include the identity of the person subject to mandatory diagnostic testing, a description of the diagnostic testing ordered, the medical basis upon which the diagnostic testing is ordered, and a description of the potential medical and legal consequences of violating such order. A person who violates a mandatory diagnostic testing order may be subject to the penalties provided in Iowa Code section 135.38 or 137.21 and may be placed under mandatory quarantine or isolation in accordance with the provisions of this chapter.

1.9(2) *General provisions.*

a. *Voluntary confinement.* Prior to instituting mandatory isolation or quarantine pursuant to this rule, the department or a local board of health may request that an individual or group of individuals voluntarily confine themselves to a private home or other facility.

b. *Quarantine and isolation.* The department and local boards of health are authorized to impose and enforce quarantine and isolation restrictions. Quarantine and isolation shall rarely be imposed by the department or by local boards of health. If a quarantinable disease occurs in Iowa, individuals with a suspected or active quarantinable disease and contacts to the case may be quarantined or isolated as the particular situation requires. Any quarantine or isolation imposed by the department or a local board of health shall be established and enforced in accordance with this rule.

1.9(3) *Conditions and principles.* The department and local boards of health shall adhere to all of the following conditions and principles when isolating or quarantining individuals or a group of individuals:

a. The isolation or quarantine shall be by the least restrictive means necessary to prevent the spread of a communicable or possibly communicable disease to others and may include, but not be limited to, confinement to private homes, other private premises, or public premises.

b. Isolated individuals shall be confined separately from quarantined individuals.

c. The health status of isolated or quarantined individuals shall be monitored regularly to determine if the individuals require further or continued isolation or quarantine.

d. If a quarantined individual subsequently becomes infected or is reasonably believed to have become infected with a communicable or possibly communicable disease, the individual shall be promptly removed to isolation.

e. Isolated or quarantined individuals shall be immediately released when the department or local board of health determines that the individuals pose no substantial risk of transmitting a communicable or possibly communicable disease.

f. The needs of isolated or quarantined individuals shall be addressed in a systematic and competent fashion including, but not limited to, providing adequate food; clothing; shelter; means of communicating with those in and outside of isolation or quarantine; medication; and competent medical care.

g. The premises used for isolation or quarantine shall be maintained in a safe and hygienic manner and shall be designed to minimize the likelihood of further transmission of infection or other harm to isolated or quarantined individuals.

h. To the extent possible, cultural and religious beliefs shall be considered in addressing the needs of individuals in isolation or quarantine premises and in establishing and maintaining the premises.

1.9(4) *Isolation and quarantine premises.*

a. Sites of isolation or quarantine shall be prominently placarded with isolation or quarantine signs prescribed and furnished by the department and posted on all sides of the building wherever access is possible.

b. An individual subject to isolation or quarantine shall obey the rules and orders of the department or the local board of health and shall not go beyond the isolation or quarantine premises.

c. The department or a local board of health may authorize physicians, health care workers, or others access to individuals in isolation or quarantine as necessary to meet the needs of isolated or quarantined individuals.

d. No individual, other than an individual authorized by the department or a local board of health, shall enter isolation or quarantine premises. If the department has requested the assistance of law enforcement in enforcing the isolation or quarantine, the department shall provide law enforcement personnel with a list of individuals authorized to enter the isolation or quarantine premises.

e. Any individual entering an isolation or quarantine premises with or without authorization of the department or a local board of health may be isolated or quarantined pursuant to this rule.

1.9(5) *Isolation and quarantine by local boards of health.*

a. A local board of health may:

(1) Isolate individuals who are presumably or actually infected with a quarantinable disease;

(2) Quarantine individuals who have been exposed to a quarantinable disease;

(3) Establish and maintain places of isolation and quarantine; and

(4) Adopt emergency rules and issue orders as necessary to establish, maintain, and enforce isolation or quarantine.

b. Isolation and quarantine undertaken by a local board of health shall be accomplished according to the rules and regulations of the local board of health so long as such rules are not inconsistent with this chapter.

1.9(6) *Isolation and quarantine by the Iowa department of public health.*

a. *Authority.*

(1) The department, through the director, the department's medical director, or the director's or medical director's designee, may:

1. Isolate individuals or groups of individuals who are presumably or actually infected with a quarantinable disease; and

2. Quarantine individuals or groups of individuals who have been exposed to a quarantinable disease, including individuals who are unable or unwilling to undergo examination, testing, vaccination, or treatment, pursuant to Iowa Code section 135.144(9).

(2) The department may:

1. Establish and maintain places of isolation and quarantine; and

2. Adopt emergency rules and issue orders as necessary to establish, maintain, and enforce isolation or quarantine.

(3) Isolation and quarantine undertaken by the department, including isolation and quarantine undertaken by the department in the event of a public health disaster, shall be established pursuant to paragraph 1.9(6)*"b"* or *"c."*

b. *Temporary isolation and quarantine without notice.* The department may temporarily isolate or quarantine an individual or groups of individuals through an oral order, without notice, only if delay in imposing the isolation or quarantine would significantly jeopardize the department's ability to prevent or limit the transmission of a communicable or possibly communicable disease to others. If the department imposes temporary isolation or quarantine of an individual or groups of individuals through an oral order, the department shall issue a written order as soon as is reasonably possible and in all cases within 24 hours of issuance of the oral order if continued isolation or quarantine is necessary to prevent or limit the transmission of a communicable or possibly communicable disease.

c. *Written order.* The department may isolate or quarantine an individual or groups of individuals through a written order issued pursuant to this rule.

(1) The written order shall include all of the following:

1. The identity of the individual, individuals, or groups of individuals subject to isolation or quarantine.

2. The premises subject to isolation or quarantine.

3. The date and time at which isolation or quarantine commences.

4. The suspected communicable disease.

5. A description of the less restrictive alternatives that were attempted and were unsuccessful, or the less restrictive alternatives that were considered and rejected, and the reasons such alternatives were rejected.

6. A statement of compliance with the conditions and principles for isolation and quarantine specified in subrule 1.9(3).

7. The legal authority under which the order is requested.

8. The medical basis upon which isolation or quarantine is justified.

9. A statement advising the individual, individuals, or groups of individuals of the right to appeal the written order pursuant to subrule 1.9(7) and the rights of individuals and groups of individuals subject to quarantine and isolation as listed in subrule 1.9(8).

10. A copy of this chapter and the relevant definitions.

(2) A copy of the written order shall be provided to the individual to be isolated or quarantined within 24 hours of issuance of the order in accordance with any applicable process authorized by the Iowa Rules of Civil Procedure. If the order applies to a group or groups of individuals and it is impractical to provide individual copies, the order may be posted in a conspicuous place in the isolation or quarantine premises.

1.9(7) *Appeal from order imposing isolation or quarantine.*

a. Contested case. The subject of a department order imposing isolation or quarantine may appeal a written order and has the right to a contested case hearing regarding such appeal. The subject of a department order imposing isolation or quarantine may appeal the order by submitting a written appeal within ten days of receipt of the written order. The appeal shall be addressed to the Department of Public Health, Division of Epidemiology, Emergency Medical Services, and Disaster Operations, Lucas State Office Building, Des Moines, Iowa 50319-0075. Unless stayed by order of the director or a district court, the written order for quarantine or isolation shall remain in force and effect until the appeal is finally determined and disposed of upon its merits.

b. Presiding officer. The presiding officer in a contested case shall be the director or the director's designee. The director or the director's designee may be assisted by an administrative law judge in conducting the contested case hearing. The decision of the director or the director's designee shall be the department's final decision and is subject to judicial review in accordance with the provisions of Iowa Code chapter 17A.

c. Proceeding. The contested case hearing shall be conducted in accordance with the provisions contained at 641—Chapter 173. The hearing shall be held as soon as is practicable, and in no case later than ten days from the date of receipt of the appeal. The hearing may be held by telephonic or other electronic means if necessary to prevent additional exposure to the communicable or possibly communicable disease. In extraordinary circumstances and for good cause shown, the department may apply to continue the hearing date for up to ten additional days on a petition filed pursuant to this rule. The presiding officer may use discretion in granting a continuance giving due regard to the rights of the affected individuals, the protection of the public's health, and the availability of necessary witnesses and evidence.

d. Judicial review. The aggrieved party to the final decision of the department may petition for judicial review of that action pursuant to Iowa Code chapter 17A. Petitions for judicial review shall be filed within 30 days after the decision becomes final.

e. Immediate judicial review of department order. The department acknowledges that in certain circumstances the subject or subjects of a department order may desire immediate judicial review of a department order in lieu of proceeding with the contested case process. The department recognizes that the procedural step of pursuing exhaustion of administrative remedies may be inadequate for purposes of Iowa Code section 17A.19, and the department may consent to immediate jurisdiction of the district court when requested by the subject or subjects of a department order and justice so requires. Unless stayed by order of the director or a district court, the written order for quarantine or isolation shall remain in force and effect until the judicial review is finally determined and disposed of upon its merits.

1.9(8) *Rights of individuals and groups of individuals subject to isolation or quarantine.* Any individual or group of individuals subject to isolation or quarantine shall have the following rights:

a. The right to be represented by legal counsel.

b. The right to be provided with prior notice of the date, time, and location of any hearing.

c. The right to participate in any hearing. The hearing may be held by telephonic or other electronic means if necessary to prevent additional exposure to the communicable or possibly communicable disease.

d. The right to respond and present evidence and argument on the individual's own behalf in any hearing.

e. The right to cross-examine witnesses who testify against the individual.

f. The right to view and copy all records in the possession of the department which relate to the subject of the written order.

1.9(9) *Consolidation of claims.* In any proceeding brought pursuant to this rule, to promote the fair and efficient operation of justice and having given due regard to the rights of the affected individuals, the protection of the public's health, and the availability of necessary witnesses and evidence, the department or a court may order the consolidation of individual claims into group claims, if all of the following conditions exist:

a. The number of individuals involved or to be affected is so large that individual participation is impractical.

b. There are questions of law or fact common to the individual claims or rights to be determined.

c. The group claims or rights to be determined are typical of the affected individuals' claims or rights.

d. The entire group will be adequately represented in the consolidation.

1.9(10) *Implementation and enforcement of isolation and quarantine.*

a. *Jurisdictional issues.* The department has primary jurisdiction to isolate or quarantine individuals or groups of individuals if the communicable disease outbreak has affected more than one county or has multicounty, statewide, or interstate public health implications. When imposing isolation or quarantine, the department shall coordinate with the local health department as appropriate. If isolation or quarantine is imposed by the department, a local board of health or local health department may not alter, amend, modify, or rescind the isolation or quarantine order.

b. *Assistance of local boards of health and local health departments.* If isolation or quarantine is imposed by the department, the local boards of health and the local health departments in the affected areas shall assist in the implementation of the isolation or quarantine order.

c. *Assistance of law enforcement.* Pursuant to Iowa Code section 135.35, all peace officers of the state shall enforce and execute a lawful department order for isolation or quarantine within their respective jurisdictions. The department shall take all reasonable measures to minimize the risk of exposure to peace officers and others assisting with enforcement of an isolation or quarantine order.

d. *Penalty.* Pursuant to Iowa Code section 135.38, any individual who knowingly violates a lawful department order for isolation or quarantine, whether written or oral, shall be guilty of a simple misdemeanor. The court-ordered sentence may include a fine of up to $500 and imprisonment not to exceed 30 days.

e. *Enforcement action.* The department may file a civil action in Polk County district court or in the district court for the county in which the individual resides or is located to enforce a department order for isolation or quarantine. Such action shall be filed in accordance with the Iowa Rules of Civil Procedure.

[**ARC 8231B**, IAB 10/7/09, effective 11/11/09]

641—1.10 and **1.11** Reserved.

641—1.12(135,137,139A) Quarantine and isolation—model rule for local boards.

1.12(1) *Applicability.* The provisions of rule 641—1.12(135,137,139A) are applicable in jurisdictions in which a local board has adopted this rule by reference in accordance with Iowa Code section 137.6. This rule shall not be construed to require a local board to adopt this model rule.

1.12(2) *Definitions.*

"Board" means [insert the name of the city, county, or district board of health].

"Department" means the Iowa department of public health.

"Isolation" means the separation of persons or animals presumably or actually infected with a communicable disease, or that are disease carriers, for the usual period of communicability of that disease. Isolation shall be in such places, marked by placards if necessary, and under such conditions to prevent the direct or indirect conveyance of the infectious agent or contagion to susceptible individuals.

"Quarantinable disease" means any communicable disease which presents a risk of serious harm to public health and which may require isolation or quarantine to prevent its spread. "Quarantinable disease" includes but is not limited to cholera; diphtheria; infectious tuberculosis; plague; smallpox; yellow fever; viral hemorrhagic fevers, including Lassa, Marburg, Ebola, Crimean-Congo, South American, and others not yet isolated or named; novel influenza; and severe acute respiratory syndrome (SARS).

"Quarantine" means the limitation of freedom of movement of persons or animals that have been exposed to a communicable disease, within specified limits marked by placards, for a period of time equal to the longest usual incubation period of the disease. The limitation of movement shall be in such manner as to prevent the spread of a communicable disease.

1.12(3) *General provisions.*

a. Voluntary confinement. Prior to instituting mandatory isolation or quarantine pursuant to this rule, the board may request that an individual or group of individuals voluntarily confine themselves to a private home or other facility.

b. Quarantine and isolation. The board is authorized to impose and enforce quarantine and isolation restrictions. Quarantine and isolation shall rarely be imposed by the board. If a quarantinable disease occurs in Iowa, individuals with a suspected or active quarantinable disease and contacts to the case may be quarantined or isolated as the particular situation requires. Any quarantine or isolation imposed by the board shall be established and enforced in accordance with this rule.

c. The local board of health shall notify, consult and work cooperatively with the Iowa department of agriculture and land stewardship and the state veterinarian office on issues relating to isolation and quarantine of animals.

1.12(4) *Conditions and principles.* The board shall adhere to all of the following conditions and principles when isolating or quarantining individuals or a group of individuals:

a. The isolation or quarantine shall be by the least restrictive means necessary to prevent the spread of a communicable or possibly communicable disease to others and may include, but is not limited to, confinement to private homes, other private premises, or public premises.

b. Isolated individuals shall be confined separately from quarantined individuals.

c. The health status of isolated or quarantined individuals shall be monitored regularly to determine if the individuals require further or continued isolation or quarantine.

d. If a quarantined individual subsequently becomes infected or is reasonably believed to have become infected with a communicable or possibly communicable disease, the individual shall be promptly removed to isolation.

e. Isolated or quarantined individuals shall be immediately released when the board determines that the individuals pose no substantial risk of transmitting a communicable or possibly communicable disease.

f. The needs of isolated or quarantined individuals shall be addressed in a systematic and competent fashion including, but not limited to, providing adequate food; clothing; shelter; means of communicating with those in and outside of isolation or quarantine; medication; and competent medical care.

g. The premises used for isolation or quarantine shall be maintained in a safe and hygienic manner and shall be designed to minimize the likelihood of further transmission of infection or other harm to isolated or quarantined individuals.

h. To the extent possible, cultural and religious beliefs shall be considered in addressing the needs of individuals in isolation and quarantine premises and in establishing and maintaining the premises.

1.12(5) *Isolation and quarantine premises.*

a. Sites of isolation or quarantine shall be prominently placarded with isolation or quarantine signs prescribed and furnished by the department and posted on all sides of the building wherever access is possible.

b. An individual subject to isolation or quarantine shall obey the rules and orders of the board and shall not go beyond the isolation or quarantine premises.

c. The department or the board may authorize physicians, health care workers, or others access to individuals in isolation or quarantine as necessary to meet the needs of isolated or quarantined individuals.

d. No individual, other than an individual authorized by the department or the board, shall enter an isolation or quarantine premises. If the department has requested the assistance of law enforcement in enforcing the isolation or quarantine, the department shall provide law enforcement personnel with a list of individuals authorized to enter the isolation or quarantine premises.

e. Any individual entering an isolation or quarantine premises with or without authorization of the department or the board may be isolated or quarantined pursuant to this rule.

1.12(6) *Isolation and quarantine.*

a. Authority. The board may:

(1) Isolate individuals who are presumably or actually infected with a quarantinable disease;

(2) Quarantine individuals who have been exposed to a quarantinable disease;

(3) Establish and maintain places of isolation and quarantine; and

(4) Adopt emergency rules and issue orders as necessary to establish, maintain, and enforce isolation or quarantine.

b. Isolation and quarantine undertaken by the board shall be accomplished in accordance with this rule.

c. Temporary isolation and quarantine without notice. The board may temporarily isolate or quarantine an individual or groups of individuals through an oral order, without notice, only if delay in imposing the isolation or quarantine would significantly jeopardize the board's ability to prevent or limit the transmission of a communicable or possibly communicable disease to others. If the board imposes temporary isolation or quarantine of an individual or groups of individuals through an oral order, the board shall issue a written order as soon as is reasonably possible and in all cases within 24 hours of issuance of the oral order if continued isolation or quarantine is necessary to prevent or limit the transmission of a communicable or possibly communicable disease.

d. Written order. The board may isolate or quarantine an individual or groups of individuals through a written order issued pursuant to this rule.

(1) The written order shall include all of the following:

1. The identity of the individual, individuals, or groups of individuals subject to isolation or quarantine.

2. The premises subject to isolation or quarantine.

3. The date and time at which isolation or quarantine commences.

4. The suspected communicable disease.

5. A description of the less restrictive alternatives that were attempted and were unsuccessful, or the less restrictive alternatives that were considered and rejected, and the reasons such alternatives were rejected.

6. A statement of compliance with the conditions and principles for isolation and quarantine specified in subrule 1.12(4).

7. The legal authority under which the order is imposed.

8. The medical basis upon which isolation or quarantine is justified.

9. A statement advising the individual, individuals, or groups of individuals of the right to appeal the written order pursuant to subrule 1.12(7) and the rights of individuals and groups of individuals subject to quarantine and isolation as listed in subrule 1.12(8).

10. A copy of this rule and the relevant definitions.

(2) A copy of the written order shall be provided to the individual to be isolated or quarantined within 24 hours of issuance of the order in accordance with any applicable process authorized by the Iowa Rules of Civil Procedure. If the order applies to a group or groups of individuals and it is impractical to provide individual copies, the order may be posted in a conspicuous place in the isolation or quarantine premises.

1.12(7) *Appeal from order imposing isolation or quarantine.*

a. *Appeal.* The subject of a board order imposing isolation or quarantine may appeal a written order by submitting a written appeal within ten days of receipt of the written order. The appeal shall be addressed to [insert name of board and board address]. Unless stayed by order of the board or a district court, the written order for quarantine or isolation shall remain in force and effect until the appeal is finally determined and disposed of upon its merits.

b. *Proceeding.* The appeal proceeding shall be conducted in accordance with this rule [or insert specific board rule governing appeal proceedings]. The proceeding shall be held as soon as is practicable, and in no case later than ten days from the date of receipt of the appeal. The hearing may be held by telephonic or other electronic means if necessary to prevent additional exposure to the communicable or possibly communicable disease. In extraordinary circumstances and for good cause shown, the board may continue the proceeding date for up to ten days, giving due regard to the rights of the affected individuals, the protection of the public's health, and the availability of necessary witnesses and evidence. At the appeal proceeding, the subject of the appeal shall have the right to introduce evidence on all issues relevant to the order. The board, by majority vote, may modify, withdraw, or order compliance with the order under appeal.

c. *Judicial review.* The aggrieved party to the final decision of the board may petition for judicial review of that action by filing an action in the appropriate district court. Petitions for judicial review shall be filed within 30 days after the decision becomes final.

d. *Immediate judicial review of board order.* The board acknowledges that in certain circumstances the subject or subjects of a board order may desire immediate judicial review of a board order in lieu of proceeding with the board's appeal process. The board may consent to immediate jurisdiction of the district court when requested by the subject or subjects of a board order and justice so requires. Unless stayed by order of the board or a district court, the written order for quarantine or isolation shall remain in force and effect until the judicial review is finally determined and disposed of upon its merits.

1.12(8) *Rights of individuals and groups of individuals subject to isolation or quarantine.* Any individual or group of individuals subject to isolation or quarantine shall have the following rights:

a. The right to be represented by legal counsel.

b. The right to be provided with prior notice of the date, time, and location of any hearing.

c. The right to participate in any hearing. The hearing may be held by telephonic or other electronic means if necessary to prevent additional exposure to the communicable or possibly communicable disease.

d. The right to respond and present evidence and argument on the individual's own behalf in any hearing.

e. The right to cross-examine witnesses who testify against the individual.

f. The right to view and copy all records in the possession of the board which relate to the subject of the written order.

1.12(9) *Consolidation of claims.* In any proceeding brought pursuant to this rule, to promote the fair and efficient operation of justice and having given due regard to the rights of the affected individuals, the protection of the public's health, and the availability of necessary witnesses and evidence, the board or a court may order the consolidation of individual claims into group claims, if all of the following conditions exist:

a. The number of individuals involved or to be affected is large enough that consolidation would be the best use of resources.

b. There are questions of law or fact common to the individual claims or rights to be determined.

c. The group claims or rights to be determined are typical of the affected individuals' claims or rights.

d. The entire group will be adequately represented in the consolidation.

1.12(10) *Implementation and enforcement of isolation and quarantine.*

a. *Jurisdictional issues.* The department has primary jurisdiction to isolate or quarantine individuals or groups of individuals if the communicable disease outbreak has affected more than one county or has multicounty, statewide, or interstate public health implications. If isolation or quarantine is imposed by the department, the board may not alter, amend, modify, or rescind the isolation or quarantine order.

b. *Assistance of local boards of health and local health departments.* If isolation or quarantine is imposed by the department, the local boards of health and the local health departments in the affected areas shall assist in the implementation of the isolation or quarantine order.

c. *Penalty.* Pursuant to Iowa Code sections 137.21 and 139A.25(1), any individual who violates a lawful board order for isolation or quarantine, whether written or oral, shall be guilty of a simple misdemeanor. The court-ordered sentence may include a fine of up to $500 and imprisonment not to exceed 30 days.

d. *Enforcement action.* The board, through the office of the county attorney, may file a civil action in the appropriate district court to enforce a board order for isolation or quarantine. Such action shall be filed in accordance with the Iowa Rules of Civil Procedure.

[**ARC 8231B**, IAB 10/7/09, effective 11/11/09]

641—1.13(135,139A) Area quarantine.

1.13(1) *General provisions.* The department and local boards of health are authorized to impose and enforce area quarantine in accordance with this rule. Area quarantine shall rarely be imposed by the department or by local boards of health.

1.13(2) *Conditions and principles.* The department and local boards of health shall adhere to all of the following conditions and principles when imposing and enforcing area quarantine:

a. Area quarantine shall be imposed by the least restrictive means necessary to prevent or contain the spread of a suspected or confirmed quarantinable disease or suspected or known hazardous or toxic agent.

b. Area quarantine shall be immediately terminated when the department or a local board of health determines that no substantial risk of exposure to a quarantinable disease or hazardous or toxic agent continues to exist.

c. The geographic boundaries of an area quarantine shall be established by risk assessment procedures including medical and scientific analysis of the quarantinable disease or hazardous or toxic agent, the location of the affected area, the risk of spread or contamination, and other relevant information.

1.13(3) *Area quarantine sites.*

a. Sites of area quarantine shall be prominently identified to restrict ingress to and egress from the area, to the extent practicable. The department or a local board of health may placard or otherwise identify the site, or may request the assistance of law enforcement in identifying the site.

b. No individual, other than an individual authorized by the department or a local board of health, shall enter a building, structure, or other physical location subject to area quarantine. The department or a local board of health may authorize public health officials, environmental specialists, health care providers, or others access to an area quarantine site as necessary to conduct public health investigations, to decontaminate the site, or for other public health purposes. Notwithstanding any provision in this chapter to the contrary, law enforcement, fire service, and emergency medical service providers may enter an area quarantine site to provide emergency response services or to conduct emergency law enforcement investigations or other emergency activities without authorization by the department or a local board of health. If the department has requested the assistance of law enforcement in enforcing the area quarantine, the department shall provide law enforcement personnel with a list of individuals authorized to enter the area quarantine site.

c. An individual authorized to enter an area quarantine site may be required to wear personal protective equipment as appropriate.

d. No individual, other than an individual authorized by the department or a local board of health, shall remove any item or object from a building, structure, or other physical location subject to area quarantine.

e. An individual entering an area quarantine site without authorization of the department or a local board of health may be isolated or quarantined pursuant to rule 641—1.9(135,139A) and may be found guilty of a simple misdemeanor.

1.13(4) *Area quarantine by local boards of health or the department of public health.*

a. Authority.

(1) The department, through the director, the department's medical director, or the director or medical director's designee, may impose area quarantine through oral or written order. Prior to imposing area quarantine, the department shall attempt to notify the local board or boards of health in the affected geographic area. If attempts to notify the local boards of health are initially unsuccessful, the department shall continue to make regular notification attempts until successful.

(2) A local board of health may impose area quarantine through oral or written order. Prior to imposing area quarantine, a local board of health shall attempt to notify the department by contacting the director, medical director, or department duty officer by telephone. If attempts to notify the department are initially unsuccessful, the local board of health shall continue to make regular notification attempts until successful.

b. Temporary area quarantine without notice. The department or a local board of health may temporarily impose area quarantine through an oral order, without notice, only if delay in imposing area quarantine would significantly jeopardize the department's or local board's ability to prevent or contain the spread of a suspected or confirmed quarantinable disease or to prevent or contain exposure to a suspected or known hazardous or toxic agent. If the department or local board imposes temporary area quarantine through an oral order, a written order shall be issued as soon as is reasonably possible and in all cases within 24 hours of issuance of the oral order if continued area quarantine is necessary.

c. Written order. The department or local board may impose area quarantine through a written order issued pursuant to this rule.

(1) The written order shall include all of the following:

1. The building or buildings, structure or structures, or other definable physical location, or portion thereof, subject to area quarantine.

2. The date and time at which area quarantine commences and the date and time at which the area quarantine shall be terminated, if known.

3. The suspected or confirmed quarantinable disease or the chemical, biological, radioactive, or other hazardous or toxic agent.

4. A statement of compliance with the conditions and principles for area quarantine specified in subrule 1.13(2).

5. The legal authority under which the order is imposed.

6. The medical or scientific basis upon which area quarantine is justified.

7. A statement advising the owner or owners of the building or buildings, structure or structures, or other definable physical location subject to area quarantine of the right to appeal the written order pursuant to subrule 1.13(5) and the rights of owners of sites subject to area quarantine pursuant to subrule 1.13(6).

8. A copy of 641—Chapter 1 and the relevant provisions of this rule.

(2) A copy of the written order shall be provided to the owner or owners of the building or buildings, structure or structures, or other definable physical location subject to area quarantine within 24 hours of issuance of the order in accordance with any applicable process authorized by the Iowa Rules of Civil Procedure; or, if the order applies to a group of owners and it is impractical to provide individual notice to each owner, the written order shall be posted in a conspicuous place at the site of area quarantine.

1.13(5) *Appeal from order imposing area quarantine.*

a. *Contested case.* The subject of a department order imposing area quarantine may appeal a written order and has the right to a contested case hearing regarding such appeal. The subject of a department order imposing area quarantine may appeal the order by submitting a written appeal within 10 days of receipt or other notice of the written order. The appeal shall be addressed to the Local Board of Health or to the Department of Public Health, Division of Acute Disease Prevention and Emergency Response, Lucas State Office Building, Des Moines, Iowa 50319-0075. Unless stayed by order of the director or a district court, the written order for area quarantine shall remain in force and effect until the appeal is finally determined and disposed of upon its merits.

b. *Presiding officer.* The presiding officer in a contested case shall be the director or the director's designee. The director or the director's designee may be assisted by an administrative law judge in conducting the contested case hearing. The decision of the director or the director's designee shall be the agency's final decision and is subject to judicial review in accordance with the provisions of Iowa Code chapter 17A.

c. *Proceeding.* The contested case hearing shall be conducted in accordance with the provisions contained at 641—Chapter 173. The hearing shall be held as soon as is practicable, and in no case later than 10 days from the date of receipt of the appeal. In extraordinary circumstances and for good cause shown, the department may apply to continue the hearing date on a petition filed pursuant to this paragraph for up to 10 days, which continuance the presiding officer may grant in the presiding officer's discretion giving due regard to the rights of the affected individuals, the protection of the public's health, and the availability of necessary witnesses and evidence.

d. *Judicial review.* The aggrieved party to the final decision of the department may petition for judicial review of that action pursuant to Iowa Code chapter 17A. Petitions for judicial review shall be filed within 30 days after the decision becomes final.

e. *Immediate judicial review of department order.* The department or local board acknowledges that in certain circumstances the subject or subjects of a department order may desire immediate judicial review of a department order in lieu of proceeding with the contested case process. The department recognizes that the procedural step of pursuing exhaustion of administrative remedies may be inadequate for purposes of Iowa Code section 17A.19, and the department may consent to immediate jurisdiction of the district court when requested by the subject or subjects of a department order and justice so requires. Unless stayed by order of the director or a district court, the written order for area quarantine shall remain in force and effect until the judicial review is finally determined and disposed of upon its merits.

1.13(6) *Rights of owners of sites subject to area quarantine.* An owner of a building, structure, or other physical location subject to area quarantine shall have the following rights:

a. The right to be represented by legal counsel.

b. The right to be provided with prior notice of the date, time, and location of any hearing.

c. The right to participate in any hearing.

d. The right to respond and present evidence and argument on the owner's own behalf in any hearing.

e. The right to cross-examine witnesses who testify against the owner or individual.

f. The right to view and copy all records in the possession of the department which relate to the subject of the written order.

1.13(7) *Consolidation of claims.* In any proceeding brought pursuant to this rule, to promote the fair and efficient operation of justice and having given due regard to the rights of the affected individuals, the protection of the public's health, and the availability of necessary witnesses and evidence, the department or a court may order the consolidation of individual claims into group claims, if all of the following conditions exist:

a. The number of individuals involved or who may be affected is so large that individual participation is impractical.

b. There are questions of law or fact common to the individual claims or rights to be determined.

c. The group claims or rights to be determined are typical of the affected individuals' claims or rights.

d. The entire group will be adequately represented in the consolidation.

1.13(8) *Implementation and enforcement of area quarantine.*

a. *Jurisdictional issues.* The department has primary jurisdiction to impose area quarantine if the quarantinable disease or hazardous or toxic agent has affected more than one county and implicates multicounty or statewide public health concerns. If area quarantine is imposed by the department, a local board of health or local health department may not alter, amend, modify, or rescind the area quarantine order.

b. *Assistance of local boards of health and local health departments.* If area quarantine is imposed by the department, the local boards of health and the local health departments in the affected areas shall assist in the implementation of the area quarantine.

c. *Assistance of law enforcement.* Pursuant to Iowa Code section 135.35, all peace officers of the state shall enforce and execute a lawful department order for area quarantine within their respective jurisdictions. The department shall take all reasonable measures to minimize the risk of individual exposure of peace officers and others assisting with enforcement of an area quarantine order.

d. *Emergency response, investigation, and decontamination—authority of other agencies.* Emergency response, investigation, and decontamination activities in and around an area quarantine site shall be conducted by law enforcement, fire service, emergency medical service providers, or other appropriate federal, state, or local officials in accordance with federal and state law and accepted procedures and protocols for emergency response, investigation, and decontamination. This rule shall not be construed to limit the authority of law enforcement, fire service, emergency medical service providers, or other federal, state, or local officials to conduct emergency response, investigation, or decontamination activities to the extent authorized by federal and state law and accepted procedures and protocols.

e. *Penalty.* Pursuant to Iowa Code section 135.38, any individual who knowingly violates a lawful department order for area quarantine, whether written or oral, shall be guilty of a simple misdemeanor. The court-ordered sentence may include a fine of up to $500 and imprisonment not to exceed 30 days.

f. *Enforcement action.* To enforce a department order for quarantine, the department may file a civil action in Polk County District Court or in the district court for the county in which the area quarantine will be enforced. Such action shall be filed in accordance with the Iowa Rules of Civil Procedure.

[**ARC 8231B**, IAB 10/7/09, effective 11/11/09]

SPECIFIC NONCOMMUNICABLE CONDITIONS

641—1.14(139A) Cancer. Each occurrence of a reportable cancer that is diagnosed or treated in an Iowa resident or occurs in a nonresident who is diagnosed or treated in an Iowa facility shall be reported to the State Health Registry of Iowa, administered by the Department of Epidemiology of the College of Public Health at the University of Iowa, by mail, telephone or electronic means.

1.14(1) *Who is required to report.* Occurrences of reportable cancers shall be reported by registrars employed by the State Health Registry of Iowa, registrars employed by health care facilities, and health care providers involved in the diagnosis, care, or treatment of individuals with a reportable cancer.

1.14(2) *What to report.* The content of the reports shall include, but not be limited to, follow-up data and demographic, diagnostic, treatment, and other medical information. Tissue samples may also be submitted under the authority of this rule.

1.14(3) *How to report.* For these particular diseases, physicians and other health practitioners should not send a report to the department.

a. The department has delegated to the State Health Registry of Iowa the responsibility for collecting these data through review of records from hospitals, radiation treatment centers, outpatient surgical facilities, oncology clinics, pathology laboratories, and physician offices.

b. Prior to collecting the data from an office or facility, the State Health Registry of Iowa shall work with the office or facility to develop a process for abstracting records which is agreeable to the office or facility.

c. Where applicable, reportable cancers shall be reported on forms developed and distributed by the State Health Registry of Iowa.

d. Data will be supplemented with information obtained from records from hospitals, radiation treatment centers, outpatient surgical centers, oncology clinics, pathology laboratories, and physician offices through an abstracting process developed by the State Health Registry of Iowa.

[**ARC 8231B**, IAB 10/7/09, effective 11/11/09]

641—1.15(144) Congenital and inherited disorders. Each occurrence of a congenital and inherited disorder that is diagnosed or treated in an Iowa resident or occurs in a nonresident who is diagnosed or treated in an Iowa facility is a reportable condition, and records of these congenital and inherited disorders shall be abstracted and maintained in a central registry. Congenital and inherited disorder surveillance shall be performed in order to determine the occurrence and trends of congenital and inherited disorders, to conduct thorough and complete epidemiological surveys, to assist in the planning for and provision of services to children with congenital and inherited disorders and their families, and to identify environmental and genetic risk factors for congenital and inherited disorders.

1.15(1) *Who is required to report.* Occurrences of reportable congenital and inherited disorders shall be reported by registrars employed by the Iowa Registry for Congenital and Inherited Disorders, registrars employed by health care facilities, and health care providers involved in the diagnosis, care, or treatment of individuals with reportable congenital and inherited disorders.

1.15(2) *What to report.* The content of the reports shall include, but not be limited to, follow-up data and demographic, diagnostic, treatment, and other medical information. Tissue samples may also be submitted under the authority of this rule.

1.15(3) *How to report.*

a. The department has delegated to the Iowa Registry for Congenital and Inherited Disorders the responsibility for collecting these data through review of records from hospitals, radiation treatment centers, outpatient surgical facilities, oncology clinics, pathology laboratories, and physician offices.

b. Prior to collecting the data from an office or facility, the Iowa Registry for Congenital and Inherited Disorders shall work with the office or facility to develop a process for abstracting records.

1.15(4) *Fetal death (stillbirth).* Each occurrence of a fetal death that occurs in an Iowa resident or occurs in a nonresident who is identified in an Iowa facility is a reportable condition.

a. Providers shall complete the fetal death certificate supplied by the department.

b. Fetal death certificates are to be filed with the department's bureau of vital records within seven days.

[**ARC 8231B**, IAB 10/7/09, effective 11/11/09]

641—1.16(139A) Agriculturally related injury.

1.16(1) *Who is required to report.*

a. Health care providers are required to report all cases of agriculturally related injury attended by them.

b. Clinics, hospitals and other health care facilities are required to report all cases of agriculturally related injury treated at their facility.

c. Health care providers who reside and health care facilities that are located outside the state of Iowa shall report all cases of agriculturally related injury of an Iowa resident that are attended or treated by them.

d. Medical examiners are required to report their investigatory findings of any death occurring within the state of Iowa which was caused by or otherwise involved a reportable agriculturally related injury.

1.16(2) *What to report.* Each report shall contain all of the following information:

a. The patient's name.

b. The patient's address.

c. The patient's date of birth.

d. The sex of the patient.

e. The race and ethnicity of the patient.

f. The patient's marital status.

g. The patient's telephone number.

h. If the patient is female, whether the patient is pregnant.

i. In the case of occupational conditions, the name of the patient's employer.

j. The date that the injury occurred.

k. The name and address of the health care provider who diagnosed and treated the injury, and the name of the reporting site, clinic, or hospital.

l. Injury diagnosis and description, including diagnostic and external cause of injury codes utilizing the international classification of diseases (ICD) coding system.

m. Severity of injury.

1.16(3) *How to report.*

a. All data shall be reported to the department at least quarterly using formats approved by the department. Reports, using the Iowa Agricultural Injury Report Form found at www.idph.state.ia.us, may be submitted by facsimile to (515)281-4529, or by mail to the Iowa Department of Public Health, Bureau of Lead Poisoning Prevention, Occupational Safety and Health Surveillance Program, Lucas State Office Building, 321 E. 12th Street, Des Moines, Iowa 50319-0075. Information may also be reported by telephone to 1-800-972-2026 during normal office hours.

b. Trauma centers may report using the Iowa Trauma Patient Registry COLLECTOR software by indicating "Yes" for farm and agriculturally related injury. For more information about using the Iowa Trauma Patient Registry for reporting, contact the Iowa Department of Public Health Bureau of Emergency Medical Services at 1-800-728-3367.

[**ARC 8231B**, IAB 10/7/09, effective 11/11/09]

CONFIDENTIALITY

641—1.17(139A,22) Confidentiality.

1.17(1) A report or other information provided to or maintained by the department, a local board, or a local department which identifies a person infected with or exposed to a reportable or other disease or health condition is confidential and shall not be accessible to the public.

1.17(2) The identity of a business named in a report or investigation is confidential and shall not be accessible to the public. If information contained in a report or other information provided to or maintained by the department, a local board, or a local department concerns a business, information disclosing the identity of the business may be released to the public when the state public health medical director and epidemiologist or the director determines such a release of information necessary for the protection of the public.

1.17(3) Reportable disease records and information, with the exception of AIDS and HIV records, which identify a person or a business named in a report, may be disclosed under the following limited circumstances:

a. By and between department employees and agents who have a need for the record in the performance of their duties.

b. By and between department employees and agents and local boards of health and local health departments as necessary to conduct an investigation.

c. By and between department employees and agents and health care providers, laboratories, and hospitals as necessary to conduct an investigation.

d. By and between department employees and agents and employees and agents of federal, state, and local agencies as necessary to conduct an investigation.

e. Reportable disease information may be included in a quarantine or isolation order or placard as necessary to prevent the spread of a quarantinable disease.

f. Pursuant to rule 641—175.9(17A,22) or 641—175.10(17A,22).

[**ARC 8231B**, IAB 10/7/09, effective 11/11/09]

These rules are intended to implement Iowa Code chapters 135, 136A, 139A, 141A and 144.

APPENDIX A
Iowa Department of Public Health
Table of Reportable Communicable and Infectious Diseases

Report cases of the diseases listed in the following table to the department within the time frame specified in the When to Report column and by the reporting method in the How to Report column.

To report diseases immediately, use the 24/7 disease reporting telephone hotline: 1-800-362-2736.

IMMEDIATELY report diseases, syndromes, poisonings and conditions of any kind suspected or caused by a biological, chemical, or radiological agent or toxin when there is reasonable suspicion that the disease, syndrome, poisoning or condition may be the result of a deliberate act such as terrorism.

IMMEDIATELY report to the department outbreaks of any kind, diseases that occur in unusual numbers or circumstances, unusual syndromes, or uncommon diseases. Outbreaks may be infectious, environmental or occupational in origin and include food-borne outbreaks or illness secondary to chemical exposure (e.g., pesticides, anhydrous ammonia).

Report diseases by:
Entering into the Iowa Disease Surveillance System (IDSS): For IDSS-related questions, call the Center for Acute Disease Epidemiology (CADE) at 1-800-362-2736.

Fax: (515)281-5698

Mail:
Iowa Department of Public Health
Center for Acute Disease Epidemiology
Lucas State Office Building
321 E. 12th Street
Des Moines, Iowa 50319

Isolates shall be sent to:
University Hygienic Laboratory
102 Oakdale Campus, H101 OH
Iowa City, Iowa 52242

For specimen submission questions, call (319)335-4500 or go to http://www.uhl.uiowa.edu/.

Diseases	When to Report	How to Report
Acquired immune deficiency syndrome (AIDS) and AIDS-defining conditions	7 days	Report by mail ● Health care providers: use the Pediatric or Adult Confidential Case Report Form ● Laboratories: send copy of lab report or the Iowa Confidential Report of Sexually Transmitted Disease & HIV Infection. Mark envelope "Attention 03" **For HIV/AIDS-related questions, call (515)242-5141**
Anthrax	1 day	Phone, IDSS, or fax

Diseases	When to Report	How to Report
Arboviral disease (includes West Nile Disease, St. Louis, LaCrosse, WEE, EEE, VEE encephalitis)	3 days	Phone, IDSS, fax or mail
Botulism	**Immediately**	24/7 disease reporting telephone hotline: 800-362-2736
Brucellosis (Burcella)	3 days	Phone, IDSS, fax or mail
Campylobacteriosis (Campylobacter)	3 days	Phone, IDSS, fax or mail
Chlamydia	3 days	Use the Iowa Confidential Report of Sexually Transmitted Disease and HIV Infection
Cholera	**Immediately**	24/7 disease reporting telephone hotline: 800-362-2736
Cryptosporidiosis	3 days	Phone, IDSS, fax or mail
Cyclospora	3 days	Phone, IDSS, fax or mail
Diphtheria	**Immediately**	24/7 disease reporting telephone hotline: 800-362-2736
Enterococcus invasive disease	3 days	Laboratories send isolate to the UHL
Escherichia coli shiga toxin-producing and related diseases (includes HUS and TTP)	3 days	Phone, IDSS, fax or mail Laboratories send isolate to the UHL
Giardiasis (Giardia)	3 days	Phone, IDSS, fax or mail
Gonorrhea	3 days	Use the Iowa Confidential Report of Sexually Transmitted Disease and HIV Infection
Group A Streptococcus invasive disease	3 days	Send isolate to the UHL
Haemophilus influenza type B invasive disease	**Immediately**	24/7 disease reporting telephone hotline: 800-362-2736 Laboratories send isolate to the UHL
Hansen's disease (leprosy)	3 days	Phone, IDSS, fax or mail
Hantavirus syndromes	3 days	Phone, IDSS, fax or mail
Hepatitis A	1 day	Phone, IDSS or fax
Hepatitis B, C, D, E	3 days	Phone, IDSS, fax or mail
Human immunodeficiency virus (HIV) cases Death of a person with HIV Perinatally exposed newborn and child (newborn and child who was born to an HIV-infected mother)	7 days	Report by mail ● Health care providers: use the Pediatric or Adult Confidential Case Report Form ● Laboratories: send copy of lab report or the Iowa Confidential Report of Sexually Transmitted Disease & HIV Infection. Mark envelope "Attention 03" **For HIV/AIDS-related questions, call (515)242-5141**
Legionellosis (Legionella)	3 days	Phone, IDSS, fax or mail
Listeria monocytogenes invasive disease	1 day	Phone, IDSS, or fax Laboratories send isolate to the UHL
Lyme disease	3 days	Phone, IDSS, fax or mail
Malaria	3 days	Phone, IDSS, fax or mail
Measles (rubeola)	**Immediately**	24/7 disease reporting telephone hotline: 800-362-2736
Meningococcal invasive disease	**Immediately**	24/7 disease reporting telephone hotline: 800-362-2736 Laboratories send isolate to the UHL
Mumps	3 days	Phone, IDSS, fax or mail
Pertussis	3 days	Phone, IDSS, fax or mail

Diseases	When to Report	How to Report
Plague	**Immediately**	24/7 disease reporting telephone hotline: 800-362-2736
Poliomyelitis	**Immediately**	24/7 disease reporting telephone hotline: 800-362-2736
Psittacosis	3 days	Phone, IDSS, fax or mail
Rabies, animal	3 days	Phone, IDSS, fax or mail
Rabies, human	**Immediately**	24/7 disease reporting telephone hotline: 800-362-2736
Rocky Mountain spotted fever	3 days	Phone, IDSS, fax or mail
Rubella (including congenital)	1 day	Phone, IDSS, fax or mail
Salmonellosis (Salmonella)	3 days	Phone, IDSS, fax or mail Laboratories send isolate to the UHL
Severe acute respiratory syndrome (SARS)	**Immediately**	24/7 disease reporting telephone hotline: 800-362-2736
Shigellosis (Shigella)	3 days	Phone, IDSS, fax or mail Laboratories send isolate to the UHL
Smallpox	**Immediately**	24/7 disease reporting telephone hotline: 800-362-2736
Staphylococcus aureus invasive disease: Methicillin-resistant invasive disease (number of S. aureus isolates should be reported to the department quarterly)	3 days	Laboratories send isolate to the UHL Mail the number of staphylococcus isolated quarterly to UHL
Vancomycin-resistant S. aureus	**Immediately**	24/7 disease reporting telephone hotline: 800-362-2736
Streptococcus pneumoniae invasive disease	3 days	Laboratories send isolate to the UHL
Syphilis	3 days	Use the Iowa Confidential Report of Sexually Transmitted Disease and HIV Infection
Tetanus	3 days	Phone, IDSS, fax or mail
Toxic Shock Syndrome	3 days	Phone, IDSS, fax or mail
Trichinosis	3 days	Phone, IDSS, fax or mail
Tuberculosis	3 days	Phone, IDSS, fax or mail
Typhoid fever	1 day	Phone, IDSS or fax
Yellow fever	**Immediately**	24/7 disease reporting telephone hotline: 800-362-2736

APPENDIX B
Iowa Department of Public Health
Table of Reportable Poisonings and Conditions

Report cases of the poisonings and conditions listed in the following table to the department within the time frame specified in the When to Report column and by the reporting method in the How to Report column.

To report diseases immediately, use the 24/7 disease reporting telephone hotline: 1-800-362-2736.

IMMEDIATELY report diseases, syndromes, poisonings and conditions of any kind suspected or caused by a biological, chemical, or radiological agent or toxin when there is reasonable suspicion that the disease, syndrome, poisoning or condition may be the result of a deliberate act such as terrorism.

IMMEDIATELY report to the department outbreaks of any kind, diseases that occur in unusual numbers or circumstances, unusual syndromes, or uncommon diseases. Outbreaks may be infectious, environmental or occupational in origin and include food-borne outbreaks or illness secondary to chemical exposure (e.g., pesticides, anhydrous ammonia).

Mailing address:
Bureau of Lead Poisoning Prevention Division of Environmental Health
Iowa Department of Public Health
321 East 12th Street
Des Moines Iowa 50319-0075

Telephone: 1-800-972-2026

Fax: (515)281-4529

Poisoning or Condition	Cases to Report	When to Report	How to Report
Arsenic poisoning	Blood arsenic values equal to or greater than 70 µg/L Urine arsenic values equal to or greater than 100 µg/g of creatinine	Weekly	Format specified by department. Web-based reporting if available. Alternatives include by mail, telephone, and facsimile.
Blood lead testing	All analytical results greater than or equal to 20 micrograms per deciliter (µg/dL) in a child under the age of 6 years or a pregnant woman	Daily	By telephone: 800-972-2026
	All other analytical values for all blood lead analyses	Weekly	Electronic format specified by the department
Cadmium poisoning	Blood cadmium values equal to or greater than 5 µg/L Urine cadmium values equal to or greater than 3 µg/g of creatinine	Weekly	Format specified by department. Web-based reporting if available. Alternatives include by mail, telephone, and facsimile.

Poisoning or Condition	Cases to Report	When to Report	How to Report
Carbon monoxide (CO) poisoning	Blood carbon monoxide level equal to or greater than 10% carboxyhemoglobin or its equivalent with a breath analyzer test, or a clinical diagnosis of CO poisoning regardless of any test results	Daily	By telephone: 800-972-2026
Hypersensitivity pneumonitis	All cases	Weekly	Format specified by department. Web-based reporting if available. Alternatives include by mail, telephone, and facsimile.
Mercury poisoning	Blood mercury values equal to or greater than 2.8 µg/dL Urine mercury values equal to or greater than 20 µg/L	Weekly	Format specified by department. Web-based reporting if available. Alternatives include by mail, telephone, and facsimile.
Methemoglobinemia	Blood analyses showing greater than 5% of total hemoglobin present as methemoglobin	Weekly	Format specified by department. Web-based reporting if available. Alternatives include by mail, telephone, and facsimile.
Noncommunicable respiratory illness	All cases	Weekly	Format specified by department. Web-based reporting if available. Alternatives include by mail, telephone, and facsimile.
Occupationally related asthma, bronchitis or respiratory hypersensitivity reaction	All cases	Weekly	Format specified by department. Web-based reporting if available. Alternatives include by mail, telephone, and facsimile.
Pesticide poisoning (including pesticide-related contact dermatitis)	All cases	Weekly	Format specified by department. Web-based reporting if available. Alternatives include by mail, telephone, and facsimile.
Severe skin disorder	All cases	Weekly	Format specified by department. Web-based reporting if available. Alternatives include by mail, telephone, and facsimile.
Toxic hepatitis	All cases	Weekly	Format specified by department. Web-based reporting if available. Alternatives include by mail, telephone, and facsimile

[**ARC 9250B**, IAB 12/1/10, effective 11/10/10]

[Filed November 20, 1970; amended August 31, 1971]
[Filed emergency 8/15/77—published 9/7/77, effective 8/15/77]
[Filed 11/10/77, Notice 10/5/77—published 11/30/77, effective 1/4/78]
[Filed 4/3/81, Notice 2/18/81—published 4/29/81, effective 6/5/81]
[Filed 2/12/82, Notice 10/28/81—published 3/3/82, effective 4/7/82]
[Filed 11/18/83, Notice 8/31/83—published 12/7/83, effective 1/13/84]
[Filed 8/14/85, Notice 4/24/85—published 9/11/85, effective 10/16/85]
[Filed emergency 7/10/87—published 7/29/87, effective 7/10/87]
[Filed 11/17/88, Notice 6/1/88—published 12/14/88, effective 1/18/89]
[Filed 5/10/89, Notice 4/5/89—published 5/31/89, effective 7/5/89]
[Filed 11/9/89, Notice 10/4/89—published 11/29/89, effective 1/3/90]
[Filed 9/24/90, Notice 8/8/90—published 10/17/90, effective 11/21/90]
[Filed 7/17/92, Notice 4/1/92—published 8/5/92, effective 9/9/92]
[Filed 11/6/92, Notice 9/16/92—published 11/25/92, effective 1/1/93]
[Filed 7/16/93, Notice 4/28/93—published 8/4/93, effective 9/8/93]

[Filed emergency 1/11/96 after Notice 11/8/95—published 1/31/96, effective 1/12/96]
[Filed 3/15/96, Notice 1/31/96—published 4/10/96, effective 5/15/96]
[Filed 7/10/98, Notice 5/6/98—published 7/29/98, effective 9/2/98]
[Filed 11/10/98, Notice 9/23/98—published 12/2/98, effective 1/6/99]
[Filed 5/10/01, Notice 4/4/01—published 5/30/01, effective 7/4/01]
[Filed emergency 9/14/01—published 10/3/01, effective 9/14/01]
[Filed 11/19/01, Notice 10/3/01—published 12/12/01, effective 1/16/02]◊
[Filed 1/16/04, Notice 12/10/03—published 2/4/04, effective 3/10/04]
[Filed 1/13/05, Notice 11/24/04—published 2/2/05, effective 3/9/05]
[Filed 5/12/05, Notice 3/30/05—published 6/8/05, effective 7/13/05]
[Filed 1/10/07, Notice 11/22/06—published 1/31/07, effective 3/7/07]
[Filed 11/14/07, Notice 10/10/07—published 12/5/07, effective 1/9/08]
[Filed ARC 8231B (Notice ARC 7966B, IAB 7/15/09), IAB 10/7/09, effective 11/11/09]
[Filed Emergency ARC 9250B, IAB 12/1/10, effective 11/10/10]
[Filed ARC 0754C (Notice ARC 0672C, IAB 4/3/13), IAB 5/29/13, effective 7/3/13]

CHAPTER 2
HEPATITIS PROGRAMS

VIRAL HEPATITIS PROGRAM—VACCINATIONS AND TESTING

641—2.1(135) Definitions. For the purpose of these rules, the following definitions shall apply:

"Contracted agencies" means local health departments, clinics, and community-based organizations that are funded by the department to provide HCV testing and vaccination services.

"Department" means the Iowa department of public health.

"HCV" means the hepatitis C virus as defined by the Centers for Disease Control and Prevention of the United States Department of Health and Human Services.

"Viral hepatitis" means inflammation of the liver caused by one of several viruses: hepatitis A, B, C (formerly non-A, non-B), D and E.

641—2.2(135) Purpose. The purpose of the viral hepatitis program shall be to distribute information, offer HCV testing, and offer hepatitis A and B vaccinations to the citizens of this state who are at an increased risk of viral hepatitis exposure.

641—2.3(135) Exposure risks for hepatitis C virus. The following individuals are at increased risk of exposure to HCV as outlined by the Centers for Disease Control and Prevention of the United States Department of Health and Human Services.

2.3(1) The following individuals are at high risk of infection:

a. Injection drug users (IDUs);

b. Recipients of clotting factors made before 1987; and

c. Hemodialysis patients.

2.3(2) The following individuals are at intermediate risk of infection:

a. Recipients of blood or solid organs before 1992;

b. Persons with undiagnosed liver problems; and

c. Infants born to HCV-infected mothers.

2.3(3) The following individuals are at low risk of infection:

a. Health care/public safety workers;

b. Persons having sex with multiple partners; and

c. Persons having sex with an HCV-infected steady partner.

641—2.4(135) Information for public distribution. The department shall make available educational materials to the public on hepatitis C infection, how to avoid transmitting the virus, and where to seek counseling and testing services. The information shall be available on the department's Web site at http://www.idph.state.ia.us/adper/hepatitis.asp and by mail to HIV/AIDS Hepatitis Program, Lucas State Office Building, 321 East 12th Street, Des Moines, Iowa 50319.

641—2.5(135) Hepatitis vaccination and testing program.

2.5(1) When sufficient state and federal funds are available, the department will establish a vaccination and testing program. The program shall offer HCV testing and hepatitis A and B vaccinations through local health departments, clinics, and community-based organizations to high-risk individuals as defined in 2.5(2) and 2.5(3). Contracted agencies offering testing and vaccination services shall be required to provide integrated HIV, viral hepatitis, and sexually transmitted disease education; pretest and posttest counseling; and referral services.

2.5(2) Contracted agencies shall offer HCV testing to the following high-risk individuals:

a. Persons who have ever injected drugs;

b. Injection drug users who share needles or other equipment;

c. Persons who receive blood, blood products, or organ transplants prior to 1992; and

d. Persons ever on long-term hemodialysis.

2.5(3) Contracted agencies shall offer hepatitis A and B vaccinations to the following high-risk individuals:

a. Injection and noninjection drug users;

b. Men who have sex with men;

c. Persons with a diagnosis of a recently acquired sexually transmitted disease (STD);

d. HIV- or HCV-infected persons; and

e. Sexual partners of persons infected with HIV, hepatitis A (HAV), or hepatitis B (HBV).

2.5(4) Contracted agencies shall provide individuals presenting for counseling, testing, and referral services and testing positive for hepatitis C educational brochures explaining their potential risk of exposure.

2.5(5) Contracted agencies shall provide individuals testing positive for HCV a referral list of health care providers to aid in seeking additional follow-up testing and other hepatitis-related services.

641—2.6 to **2.8** Reserved.

HEPATITIS C AWARENESS PROGRAM—VETERANS

641—2.9(135) Definitions. For the purpose of these rules, the following definitions shall apply:

"Department" means the Iowa department of public health.

"HCV" means the hepatitis C virus as defined by the Centers for Disease Control and Prevention of the United States Department of Health and Human Services.

"Veteran" means an individual meeting the definition contained in Iowa Code section 35.1.

641—2.10(135) Purpose. The purpose of the hepatitis C awareness program shall be to distribute information to veterans regarding the higher incidence of hepatitis C exposure and infection among veterans, the dangers presented by the disease, and contact information and referrals.

641—2.11(135) Awareness materials. The department shall provide hepatitis awareness materials to veterans through various educational media.

641—2.12(135) Awareness information. Information distributed by the department shall contain the following statements:

2.12(1) HCV infection rates for veterans are estimated to be at least three times higher than the general population.

2.12(2) Vietnam veterans experience a higher HCV infection rate than other veteran groups.

2.12(3) Exposure to blood during combat and combat-related medical services poses a risk for HCV infection.

2.12(4) Many veterans currently infected with HCV may have been exposed prior to the development of screening tests.

2.12(5) Symptoms and liver complications associated with chronic hepatitis infection may not appear for decades after initial infection.

641—2.13(135) Resources for hepatitis follow-up and treatment. The department shall provide hepatitis resource information to veterans regarding medical follow-up and treatment options.

These rules are intended to implement Iowa Code sections 135.19 and 135.20.

[Filed 11/14/07, Notice 10/10/07—published 12/5/07, effective 1/9/08]

CHAPTER 3
EARLY HEARING DETECTION AND INTERVENTION

EARLY HEARING DETECTION AND INTERVENTION (EHDI) PROGRAM

641—3.1(135) Definitions. For the purposes of this chapter, the following definitions will apply:

"Applicant" means a child for whom assistance under this program is being requested.

"Area education agency" or *"AEA"* means an intermediate educational unit created by Iowa Code chapter 273.

"Audiologist" means a person licensed pursuant to Iowa Code chapter 147 or certified by the Iowa board of educational examiners pursuant to 282—15.3(272) or a person appropriately licensed in the state where the person practices.

"Birth center" means *"birth center"* as defined in Iowa Code section 135.61.

"Birthing hospital" means a private or public hospital licensed pursuant to Iowa Code chapter 135B that has a licensed obstetric unit or is licensed to provide obstetric services.

"Contractor" means the entity selected by the department to act as third-party administrator for claims payment related to hearing aids and audiologic services for children.

"Department" means the Iowa department of public health.

"Diagnostic audiologic assessment" means physiologic or behavioral procedures completed by an audiologist to evaluate and diagnose hearing loss.

"Discharge" means a release from a hospital to the parent or legal guardian of the child.

"Early ACCESS" means Iowa's Individuals with Disabilities Education Act (IDEA), Part C, program for infants and toddlers. It is a statewide, comprehensive, interagency system of integrated early intervention services that supports eligible children and their families as defined in 281—Chapter 120.

"Early hearing detection and intervention advisory committee" or *"EHDI advisory committee"* means the committee appointed by the department to advise the director of the department regarding issues related to hearing health care for children and to make recommendations about the design and implementation of the early hearing detection and intervention program.

"Guardian" means a person who is not the parent of a minor child, but who has legal authority to make decisions regarding life or program issues for the child. A guardian may be a court or a juvenile court. "Guardian" does not mean conservator, as defined in Iowa Code section 633.3, although a person who is appointed to be a guardian may also be appointed to be a conservator.

"Hearing loss" means a permanent unilateral or bilateral hearing loss of greater than 30 dB HL in the frequency region important for speech recognition (500-4000 Hz).

"Hearing screening" means a physiological measurement of hearing of a newborn or infant with a "pass" or "refer" result. Screening is used to determine the newborn's or infant's need for further testing and must be performed bilaterally, when applicable.

"Initial screening" means a newborn hearing screening performed during the birth admission for an infant born in a birthing hospital, or the first newborn hearing screening performed on a newborn born in a facility other than a hospital.

"Newborn hearing screening" means a physiological test to separate those newborns with normal hearing from those newborns who may have hearing thresholds of greater than 30 dB HL in either ear in the frequency region important for speech recognition (500-4000 Hz).

"Normal hearing" means hearing thresholds in both ears of 30 dB HL or less in the frequency region important for speech recognition (500-4000 Hz).

"Parent" means:

1. A biological or adoptive parent of a child;
2. A guardian, but not the state if the child is a ward of the state;
3. A person acting in the place of a parent, such as a grandparent or stepparent with whom a child lives, or a person who is legally responsible for the child's welfare;
4. A surrogate parent who has been assigned in accordance with 281—120.68(34CFR303); or

5. A foster parent, if:

- A biological parent's authority to make the decisions required of parents under state law has been terminated; and
- The foster parent has an ongoing, long-term parental relationship with the child; is willing to make the decisions required of a parent; and has no interest that would conflict with the interests of the child.

"Physician" means an individual licensed under Iowa Code chapter 148, 150, or 150A.

"Protocol" means a document which guides decision making and provides the criteria to be used regarding screening, diagnosis, management, and treatment of children related to hearing health care. Early hearing detection and intervention protocols not otherwise specified in this chapter are available on the department's Web site at http://www.idph.state.ia.us/iaehdi/professionals.asp.

"Provider" means a licensed audiologist, otolaryngologist or hearing aid dispenser who agrees to provide hearing aids or audiologic services to eligible patients.

"Rescreen" means a newborn hearing screening performed after two weeks of age on an infant who did not pass the initial screening.

"Resident" means an individual who is a legal resident of the state of Iowa.

[**ARC 8232B**, IAB 10/7/09, effective 11/11/09]

641—3.2(135) Purpose. The overall purpose of this chapter is to establish administrative rules in accordance with Iowa Code section 135.131 as amended by 2009 Iowa Acts, House File 314, division II, relative to the following:

1. Universal hearing screening of all newborns and infants in Iowa.
2. Facilitating the transfer of data to the department to enhance the capacity of agencies and practitioners to provide services to children and their families.
3. Establishing the procedure for distribution of funds to support the purchase of hearing aids and audiologic services for children in accordance with 2009 Iowa Acts, House File 811, section 60(2)*"c."*

[**ARC 8232B**, IAB 10/7/09, effective 11/11/09]

641—3.3(135) Goal and outcomes. The goal of universal hearing screening of all newborns and infants in Iowa is early detection of hearing loss to allow children and their families the earliest possible opportunity to obtain appropriate early intervention services.

[**ARC 8232B**, IAB 10/7/09, effective 11/11/09]

641—3.4(135) Program components.

3.4(1) The early hearing detection and intervention (EHDI) coordinator assigned within the department provides administrative oversight to the early hearing detection and intervention program within Iowa.

3.4(2) The EHDI advisory committee represents the interests of the people of Iowa and assists in the development of programming that ensures the availability and access to quality hearing health care for Iowa children.

a. Committee membership includes representation from different facets of the health care community including the Iowa Hospital Association, private practice audiologists, pediatricians, family practice physicians and otolaryngologists.

b. The committee also includes representation from the deaf community, parents of children with hearing loss, advocates, Early ACCESS (IDEA, Part C), area education agencies, and other stakeholders that are affected by or involved with newborn hearing screening and follow-up.

3.4(3) The early hearing detection and intervention program has an association with the Iowa Title V maternal and child health programs to promote comprehensive services for infants and children with special health care needs.

[**ARC 8232B**, IAB 10/7/09, effective 11/11/09]

641—3.5(135) Screening the hearing of all newborns. All newborns and infants born in Iowa, except those born with a condition that is incompatible with life, shall be screened for hearing loss. The person required to perform the screening shall use at least one of the following procedures:

1. Automated or screening auditory brainstem response, or
2. Evoked otoacoustic emissions.

[**ARC 8232B**, IAB 10/7/09, effective 11/11/09]

641—3.6(135) Procedures required of birthing hospitals. Each birthing hospital in Iowa shall follow these procedures:

3.6(1) Each birthing hospital shall designate an employee of the hospital to be responsible for the newborn hearing screening program in that institution.

3.6(2) Prior to the discharge of the newborn, each birthing hospital shall provide hearing screening to every newborn delivered in the hospital, except in the following circumstances:

a. The newborn is transferred for acute care prior to completion of the hearing screening.

b. The newborn is born with a condition that is incompatible with life.

3.6(3) If a newborn is transferred for acute care, the birthing hospital shall notify the receiving facility of the status of the hearing screening. The receiving facility shall then be responsible for completion of the newborn hearing screening prior to discharge of the newborn from the nursery.

3.6(4) Newborn hearing screening shall be performed by an audiologist, audiology assistant, audiometrist, registered nurse, licensed physician, or other person for whom newborn hearing screening is within the person's scope of practice.

3.6(5) The hospital shall report newborn hearing screening results to the parent or guardian in written form.

3.6(6) The hospital shall report newborn hearing screening results to the department in a manner prescribed in 641—3.9(135).

3.6(7) The birthing hospital shall report the results of the hearing screening to the primary care provider of the newborn or infant upon the newborn's or infant's discharge from the birthing hospital. If the newborn or infant was not tested prior to discharge, the hospital shall report the status of the hearing screening to the primary care provider of the newborn or infant.

3.6(8) The birthing hospital shall follow the hearing screening protocols prescribed by the department.

[**ARC 8232B**, IAB 10/7/09, effective 11/11/09]

641—3.7(135) Procedures required of birth centers. Each birth center in Iowa shall follow these procedures:

3.7(1) Each birth center shall designate an employee of the birth center to be responsible for the newborn hearing screening program in that institution.

3.7(2) Prior to discharge of the newborn, each birth center shall refer every newborn delivered in the birth center to an audiologist, physician, or hospital for a newborn hearing screening. Before discharge of the newborn, the birth center shall arrange an appointment for the newborn hearing screening and report to the parent the appointment time, date, and location.

3.7(3) The facility to which the newborn is referred for screening shall complete the screening within 30 days of the newborn's discharge from the birth center, unless the parent fails to attend the appointment. If the parent fails to attend the appointment, the facility shall document such failure in the medical or educational record and shall report such failure to the department.

3.7(4) The person who completes the newborn hearing screening shall report screening results to the parent in written form.

3.7(5) The person who completes the newborn hearing screening shall report screening results to the department in the manner prescribed in 641—3.9(135).

3.7(6) The person who completes the screening shall follow the hearing screening protocols prescribed by the department.

[**ARC 8232B**, IAB 10/7/09, effective 11/11/09]

641—3.8(135) Procedures to ensure that children born in locations other than a birth center or birthing hospital receive a hearing screening.

3.8(1) A physician or other health care professional who undertakes primary pediatric care of a newborn delivered in a location other than a birthing hospital or birth center shall refer the newborn to an audiologist, physician, or hospital for completion of the newborn hearing screening within three months of the newborn's birth. The health care professional who undertakes primary pediatric care of the newborn shall arrange an appointment for the newborn hearing screening and report to the parent the appointment time, date, and location.

3.8(2) The person who completes the newborn hearing screening shall report screening results to the parent in written form.

3.8(3) The person who completes the newborn hearing screening shall report screening results to the department in the manner prescribed in 641—3.9(135). If the parent fails to attend the appointment, the facility shall document such failure in the medical or educational record and shall report such failure to the department.

3.8(4) The person who completes the newborn hearing screening shall follow the hearing screening protocols prescribed by the department.

[**ARC 8232B**, IAB 10/7/09, effective 11/11/09]

641—3.9(135) Reporting hearing screening results and information to the department. Any birthing hospital, birth center, physician, audiologist or other health care professional required to report information pursuant to Iowa Code section 135.131 as amended by 2009 Iowa Acts, House File 314, division II, shall report all of the following information to the department relating to each newborn's hearing screening within six working days of the birth of the newborn and within six working days of any hearing rescreen, utilizing the department's designated reporting system.

3.9(1) The name and date of birth of the newborn.

3.9(2) The name, address, and telephone number, if available, of the mother of the newborn. If the mother is not the person designated as legally responsible for the child's care, the name, address, and telephone number of the parent, as defined in 641—3.1(135), shall be reported.

3.9(3) The name of the primary care provider for the newborn upon the newborn's discharge from the birthing hospital or birth center.

3.9(4) The results of the newborn hearing screening, either "pass," "refer," or "not screened," for each ear separately.

3.9(5) The results of any rescreening, either "pass" or "refer," and the diagnostic audiologic assessment procedures used for each ear separately.

3.9(6) Known risk indicators for hearing loss of the newborn or infant.

[**ARC 8232B**, IAB 10/7/09, effective 11/11/09]

641—3.10(135) Conducting and reporting screening results and diagnostic audiologic assessments to the department. Any facility, licensed audiologist or health care professional conducting newborn hearing screens, rescreens, or diagnostic audiologic assessments shall report the results within six working days for any child under three years of age to the department utilizing the department's designated reporting system. The facility shall conduct the diagnostic hearing assessment in accordance with the Pediatric Audiologic Diagnostic Protocol contained at Appendix A. Results of a hearing screen, rescreen or diagnostic audiologic assessment shall be reported as follows.

3.10(1) Reports shall include:

a. The name and date of birth of the child.

b. The name, address, and telephone number, if available, of the mother of the child. If the mother is not the person designated as legally responsible for the child's care, the name, address, and telephone number of the parent, as defined in 641—3.1(135), shall be reported.

c. The name of the primary care provider for the child.

d. Known risk indicators for hearing loss.

3.10(2) Results of the newborn hearing screening shall be reported as either "pass" or "refer" for each ear separately.

3.10(3) Results of the hearing rescreen shall be reported as either "pass" or "refer" for each ear separately.

3.10(4) If an assessment results in a diagnosis of normal hearing for both ears, this shall be reported.

3.10(5) Any diagnosis of hearing loss shall also be reported except for transient conductive hearing loss lasting for less than 90 days in the professional judgment of the practitioner.

3.10(6) Diagnostic audiologic assessment results shall include a statement of the severity (mild, moderate, moderately severe, severe, profound, or undetermined) and type (sensorineural, conductive, mixed, or undetermined) of hearing loss.

[**ARC 8232B**, IAB 10/7/09, effective 11/11/09]

641—3.11(135) Sharing of information and confidentiality. Reports, records, and other information collected by or provided to the department relating to a child's newborn hearing screening, rescreen, and diagnostic audiologic assessment are confidential records pursuant to Iowa Code section 22.7.

3.11(1) Personnel of the department shall maintain the confidentiality of all information and records used in the review and analysis of newborn hearing screenings, rescreens, and diagnostic audiologic assessments, including information which is confidential under Iowa Code chapter 22 or any other provisions of state law.

3.11(2) No individual or organization providing information to the department in accordance with this rule shall be deemed to be or held liable for divulging confidential information.

3.11(3) The department shall not release confidential information except to the following persons and entities under the following conditions:

a. The parent or guardian of an infant or child for whom the report is made.

b. A local birth-to-three coordinator with the Early ACCESS program or an agency under contract with the department to administer the children with special health care needs program.

c. A local health care provider.

d. A representative of a federal or state agency, to the extent that the information is necessary to perform a legally authorized function of that agency.

e. A representative of a state agency, or an entity bound by that state, to the extent that the information is necessary to perform newborn hearing screening follow-up. The state agency or the entity bound by that state shall be subject to confidentiality regulations that are the same as or more stringent than those in the state of Iowa. The state agency or the entity bound by that state shall not use the information obtained from the department to market services to patients or nonpatients or identify patients for any purposes other than those expressly provided in this rule.

3.11(4) Research purposes. All proposals for research using the department's data to be conducted by persons other than program staff shall first be submitted to and accepted by the researchers' institutional review board. Proposals shall then be reviewed and approved by the department before research can commence.

[**ARC 8232B**, IAB 10/7/09, effective 11/11/09]

641—3.12(135) Reporting requirements for AEAs. Rescinded IAB 10/7/09, effective 11/11/09.

641—3.13(135) Procedure to accommodate parental objection. These rules shall not apply if the parent objects to the hearing screening.

3.13(1) If a parent objects to the screening, the birthing hospital, birth center, physician, or other health care professional shall obtain a written refusal from the parent or guardian on the department newborn hearing screening refusal form and shall maintain the original copy of the written refusal in the newborn's or infant's medical record.

3.13(2) The birthing hospital, birth center, physician, or other health care professional shall send a copy of the written newborn hearing screening refusal form to the department within six days of the birth of the newborn.

[**ARC 8232B**, IAB 10/7/09, effective 11/11/09]

641—3.14(135) Civil/criminal liability. A person who acts in good faith in complying with these rules shall not be held civilly or criminally liable for reporting the information required.
[**ARC 8232B**, IAB 10/7/09, effective 11/11/09]

641—3.15() and **3.16()** Reserved

HEARING AIDS AND AUDIOLOGIC SERVICES FUNDING PROGRAM

641—3.17(83GA,HF811) Eligibility criteria. The enrollment process to determine eligibility for services under this program includes the following requirements:

3.17(1) Age. Individuals are eligible from birth through 20 years of age.

3.17(2) Residency. Individuals must currently reside in Iowa.

3.17(3) The applicant must not be eligible for hearing aids or audiologic services under Title XIX or HAWK-I.
[**ARC 8232B**, IAB 10/7/09, effective 11/11/09]

641—3.18(83GA,HF811) Covered services.

3.18(1) Funding does not cover either the surgical costs associated with a cochlear or Baha implant or the cost of the devices.

3.18(2) Funding does not pay for services denied by insurance because the applicant received services outside the provider network.

3.18(3) The following hearing aids and audiologic services may be provided through the hearing aids and audiologic services funding program:

1. Repair/modification of hearing aid
2. Hearing aid, monaural, behind the ear
3. Hearing aid dispensing fee, monaural
4. Hearing aid, binaural, in the ear
5. Hearing aid, binaural, behind the ear
6. Hearing aid dispensing fee, binaural
7. Hearing aid, bicros, glasses
8. Ear mold/insert, not disposable, any type
9. Battery for use in hearing aid
10. Hearing aid supplies, accessories
11. Assistive listening device, not otherwise specified
12. Assistive listening device, dispensing
13. Service handling charge
14. Service charge, ear mold
15. Annual charge, ear mold
16. Pure tone audiometry, air only
17. Pure tone audiometry, air and speech audiometry threshold
18. Speech audiometry threshold
19. Speech audiometry threshold with speech
20. Comprehensive audiometry threshold evaluation
21. Tympanometry (impedance testing)
22. Conditioning play audiometry
23. Auditory-evoked potentials for evoked response audiometry, comprehensive
24. Auditory-evoked potentials for evoked response audiometry, limited
25. Visual reinforcement audiometry
26. Evoked otoacoustic emissions, limited
27. Hearing aid examination and selection, monaural
28. Hearing aid examination and selection, binaural
29. Hearing aid check, monaural
30. Hearing aid check, binaural

31. Electroacoustic evaluation for hearing aid, monaural
32. Electroacoustic evaluation for hearing aid, binaural
33. Office/outpatient visit related to audiologic services
34. Consultations related to audiologic services

3.18(4) The department may elect to cover additional services not otherwise restricted in these rules.
[**ARC 8232B**, IAB 10/7/09, effective 11/11/09]

641—3.19(83GA,HF811) Application procedures.

3.19(1) A child, or the parent or guardian of a child, desiring hearing aids or audiologic services may apply to the contractor.

3.19(2) The following information shall be provided to the contractor by the applicant to be considered for eligibility under this program:

a. Patient's first name, middle initial and last name.
b. Patient's date of birth.
c. Patient's address, including city, state and ZIP code.
d. Parent/guardian's first name, middle initial and last name.
e. Parent/guardian's telephone number.
f. Parent/guardian's E-mail address.
g. Parent/guardian's or child's medical insurance plan name.
h. Hearing aid/audiologic service provider name and telephone number.
i. Whether the request is for hearing aids or audiologic services or both.
j. Estimated service costs.

3.19(3) Applicants will be enrolled in the program on a first-come, first-served basis upon the date the application is received by the contractor.

3.19(4) The contractor will provide written notification to the applicant regarding determination of eligibility or noneligibility and the applicant's right to appeal a denial. For those applicants deemed eligible, an enrollee number will be assigned by the contractor.

3.19(5) An applicant must submit a renewal application form on an annual basis, accompanied by all information requested by the department.
[**ARC 8232B**, IAB 10/7/09, effective 11/11/09]

641—3.20(83GA,HF811) Hearing aids and audiologic services funding wait list.

3.20(1) If an applicant is eligible for hearing aid and audiologic services funding and sufficient funds are available to provide services to the applicant, the contractor shall enroll the applicant upon approval by the department. If the applicant is eligible for hearing aid and audiologic services funding and sufficient funds are not available to provide services to the applicant, the contractor upon approval by the department shall place the applicant's name on the hearing aid and audiologic services funding wait list in the order provided for in this rule.

3.20(2) The contractor, upon approval by the department, shall place names on the wait list in the following order:

a. Applicants under the age of three diagnosed with a hearing loss who are in need of hearing aids.
b. Applicants in need of hearing aids or audiologic services.
c. All other applicants, who shall be placed on the wait list in chronological order based upon the date of receipt of a completed application by the contractor upon approval by the department.
[**ARC 8232B**, IAB 10/7/09, effective 11/11/09]

641—3.21(83GA,HF811) Reimbursement of providers.

3.21(1) To receive reimbursement for hearing aids and audiologic services, the provider must complete a provider information sheet and I-9 form provided by the department.

3.21(2) The provider must be a Title XIX provider.

3.21(3) Reimbursement of hearing aids and audiologic services will be paid directly to the provider based on Title XIX reimbursement rates.

a. Bills will be adjusted accordingly by the department prior to payment.

b. Reimbursement for hearing aids or supplemental hearing devices includes the costs of shipping and handling.

3.21(4) Hearing aids and audiologic services funding shall be the payor of last resort.

3.21(5) Payment through this funding source is considered payment in full for covered services. If a third party liability (TPL) payment equals or exceeds the Title XIX allowance, no further reimbursement is provided.

3.21(6) The provider shall submit bills after an enrollee number is assigned to the applicant and the audiologic service is provided or hearing aid is fitted.

3.21(7) The provider shall submit the following documents:

a. Health Care Financing Administration Form HCFA 1500. Forms will be furnished by the providers and will include the applicant's enrollee number in the upper right-hand corner of the form.

b. Manufacturer's invoice for hearing devices as prescribed by the department.

c. Applicant's explanation of benefits or documentation of a telephone contact made by the provider to the patient's private insurance company including: date of contact, name of insurance representative, name of insurance company, applicant's policy number and coverage limitations for hearing evaluations and devices.

[**ARC 8232B**, IAB 10/7/09, effective 11/11/09]

641—3.22(83GA,HF811) Appeals. The department shall cause an applicant to be notified of the department's decision to approve or deny an application or to place an applicant on the child hearing aids and audiologic services wait list. In the event an applicant is dissatisfied with the department's decision, the applicant may submit a formal appeal in writing to the EHDI advisory committee. Such request shall be delivered in person or shall be mailed by certified mail, return receipt requested, to EHDI Advisory Committee, Iowa Department of Public Health, Lucas State Office Building, 321 E. 12th Street, Des Moines, Iowa 50319. Upon receipt of such an appeal, the EHDI advisory committee shall review the case and issue a written determination within 15 days of receipt of the request. The decision shall refer to the applicant by initials or other nonidentifying means. The EHDI advisory committee's decision shall be final and binding. This appeal process does not constitute a contested case proceeding as defined in Iowa Code chapter 17A.

[**ARC 8232B**, IAB 10/7/09, effective 11/11/09]

These rules are intended to implement Iowa Code section 135.131 as amended by 2009 Iowa Acts, House File 314, division II, and 2009 Iowa Acts, House File 811, division IV, section 60(2)*"c."*

[Filed emergency 11/17/03 after Notice 10/1/03—published 12/10/03, effective 1/1/04]

[Filed 9/18/06, Notice 7/19/06—published 10/11/06, effective 11/15/06]

[Filed ARC 8232B (Notice ARC 7967B, IAB 7/15/09), IAB 10/7/09, effective 11/11/09]

Appendix A
Pediatric Audiologic Diagnostic Protocol

The following protocol should be used to facilitate the diagnosis of hearing loss by three months of age and entry into early intervention for infants with hearing loss by six months of age. This diagnostic protocol should be implemented by an audiologist licensed by the Iowa board of speech pathology and audiology examiners or certified by the Iowa board of educational examiners.

Infants should be referred for a diagnostic evaluation after receiving a "refer" result from one or both ears on a newborn hearing screening and a hearing rescreen performed at two to six weeks of age. Timely referral for diagnostic auditory brainstem response (ABR) testing may negate the need for sedation for this test in very young infants. Infants who are identified at risk for congenital or late-onset hearing loss (JCIH, 2007) should receive an audiologic assessment at least once by 24 to 30 months of age. Children with risk indicators that are highly associated with late-onset hearing loss, such as having received ECMO or having congenital CMV infection, should have more frequent audiologic assessments based on infant or toddler needs. All infants for whom the family has significant concerns regarding hearing or communication should be promptly referred for an audiologic and speech-language assessment.

Audiologic diagnostic centers should be prepared to provide the following services:

I. Measures of auditory sensitivity

A. Auditory brainstem response (ABR)

Infants who do not pass the newborn hearing screening or rescreen should be evaluated with a click-evoked air-conduction ABR and at least one low-frequency tone burst ABR, preferably at 500 Hz. Response waveforms should be measured at several levels to allow threshold determination and latency-intensity functions. When thresholds are determined to be elevated, the audiologist may measure the ABR with frequency-specific stimuli at other frequencies as well. Infants suspected of having significant conductive hearing loss should be considered for bone-conduction ABR testing. Clinicians should be aware that technological advances will continually improve recommended protocols.

B. Evoked otoacoustic emissions

Transient evoked otoacoustic emissions (TEOAE) or distortion product otoacoustic emissions (DPOAE) should be used to confirm the magnitude and configuration of the hearing loss as determined by the ABR.

C. Behavioral measures

At a developmental age of six months or older, it is possible to obtain reliable behavioral audiometric information using visual reinforcement audiometry (VRA). While this test has traditionally been performed in the sound field, ear-specific threshold information can be obtained using insert earphones. VRA is an important technique for use in monitoring auditory thresholds, especially during the first few years of hearing aid use.

II. Measures of middle ear function

A. Tympanometry

Although pass/fail criteria for tympanograms from infants younger than six months of age are currently being developed, an infant audiologic evaluation should include an admittance tympanogram at 1000 Hz to help determine middle ear function.

B. Acoustic reflexes

Ipsilateral or contralateral acoustic reflexes should be measured at a minimum of two activator frequencies (1000 and 2000 Hz) at a probe tone of 800 or 1000 Hz.

CHAPTER 4
CENTER FOR CONGENITAL AND INHERITED DISORDERS
[Prior to 7/29/87, Health Department[470]]

641—4.1(136A) Program overview. The center for congenital and inherited disorders within the department of public health provides administrative oversight to the following: Iowa newborn screening program, Iowa maternal prenatal screening program, regional genetic consultation service, neuromuscular and related genetic disease program, Iowa registry for congenital and inherited disorders, and Iowa early hearing detection and intervention program.

4.1(1) *Advisory committee.* The center for congenital and inherited disorders advisory committee represents the interests of the people of Iowa and assists in the development of programs that ensure the availability of and access to quality genetic and genomic health care services by all residents. The committee advises the director of the department of public health regarding issues related to genetics and hereditary and congenital disorders and makes recommendations about the design and implementation of the center's programs.

4.1(2) *Genetics coordinator.* The state genetics coordinator assigned within the department provides administrative oversight to the center for congenital and inherited disorders program within Iowa.

4.1(3) *Title V.* The center for congenital and inherited disorders has an association with the state Title V maternal child health program to promote comprehensive services for women, infants and children.
[**ARC 0664C**, IAB 4/3/13, effective 5/8/13; **ARC 1747C**, IAB 12/10/14, effective 1/14/15]

641—4.2(136A) Definitions. For the purposes of this chapter, the following definitions shall apply:

"Anonymized specimen" means a specimen that cannot be traced back to or linked with the particular individual from whom the specimen was obtained.

"Attending health care provider" means the licensed physician, nurse practitioner, certified midwife or physician assistant providing care to an infant at birth.

"Birthing facility" means a private or public facility licensed pursuant to Iowa Code chapter 135B that has a licensed obstetric unit or is licensed to provide obstetric services.

"Center" means the center for congenital and inherited disorders within the Iowa department of public health.

"Central laboratory" means the state hygienic laboratory (SHL), which is designated as the screening laboratory to perform testing and reporting for the Iowa newborn screening and Iowa maternal prenatal screening programs.

"Central registry" means the Iowa registry for congenital and inherited disorders (IRCID).

"Committee" means the congenital and inherited disorders advisory committee (CIDAC).

"Consulting physician" means a physician designated by the center for congenital and inherited disorders to interpret screen results and provide consultation to a licensed health care provider.

"Critical congenital heart disease" or *"CCHD"* means the presence of one or more specific heart lesions: hypoplastic left heart syndrome, pulmonary atresia, tetralogy of Fallot, total anomalous pulmonary venous return, transposition of the great arteries, tricuspid atresia, and truncus arteriosus.

"Department" means the Iowa department of public health.

"Director" means the director of the Iowa department of public health.

"Discharge" means a release of an infant from a hospital or birth center.

"Early ACCESS" means Iowa's Individuals with Disabilities Education Act (IDEA), Part C, program for infants and toddlers. Early ACCESS is a statewide, comprehensive, interagency system of integrated early intervention services that supports eligible children and their families as defined in 281—Chapter 120.

"Early hearing detection and intervention program" means Iowa's newborn hearing screening and follow-up program which ensures that all newborns and toddlers with hearing loss are identified as early as possible and provided with timely and appropriate audiological, educational and medical intervention and family support.

"Follow-up program" means the services provided to follow up on an abnormal screening result.

"Guardian" means a person who is not the parent of a minor child, but who has legal authority to make decisions regarding life or program issues for the child.

"Health care provider" means a licensed physician, nurse practitioner, certified nurse midwife, registered nurse, or physician assistant providing medical care to an individual.

"Iowa maternal prenatal screening program" or *"IMPSP"* means a program that provides a screening test designed to identify women with an increased risk of having a baby with a congenital or inherited disorder or women at risk of developing a problem later in pregnancy.

"Newborn critical congenital heart disease (CCHD) screening" means the screening of newborns for seven targeted heart conditions (hypoplastic left heart syndrome, pulmonary atresia, tetralogy of Fallot, total anomalous pulmonary venous return, transposition of the great arteries, tricuspid atresia, and truncus arteriosus) using pulse oximetry or other means to detect blood oxygen saturation levels.

"Primary health care provider" means a licensed physician, physician assistant, nurse practitioner, or certified nurse midwife providing ongoing primary medical care to a patient.

"Receiving facility" means the facility receiving an infant from a birthing facility.

"Residual maternal prenatal serum screening specimen" means the portion of the specimen that may be left over after all necessary activities of the Iowa maternal prenatal screening program are completed.

"Residual newborn screening specimen" means the portion of the dried blood spot specimen that may be left over after all activities necessary for the Iowa newborn screening program are completed.

"Specialty genetics provider" means a geneticist, genetic nurse, or genetic counselor.

"State hygienic laboratory" or *"SHL"* means the designated central testing laboratory.

"Transferring facility" means the birthing facility that transfers the infant to another facility.

[**ARC 7981B**, IAB 7/29/09, effective 9/2/09; **ARC 0664C**, IAB 4/3/13, effective 5/8/13; **ARC 1747C**, IAB 12/10/14, effective 1/14/15]

641—4.3(136A) Iowa newborn screening program (INSP). This program provides comprehensive newborn screening services for hereditary and congenital disorders for the state.

4.3(1) *Newborn screening policy.*

a. All newborns and infants born in the state of Iowa shall be screened for all congenital and inherited disorders specified by the center and approved by the state board of health.

b. As new disorders are recognized and new technologies and tests become available, the center shall follow protocols developed by the department in regard to the addition of disorders to or the deletion of disorders from the screening panel. The state board of health shall provide final approval for the addition of disorders to or the deletion of disorders from the screening panel.

c. The center may monitor individuals identified as having a genetic or metabolic disorder for the purpose of conducting public health surveillance or intervention and for determining whether early detection, treatment, and counseling lead to the amelioration or avoidance of the adverse outcomes of the disorder. Birthing facilities and health care providers shall provide patient data and records to the center upon request to facilitate the monitoring. Any identifying information provided to the center shall remain confidential pursuant to Iowa Code section 22.7(2).

d. For purposes of newborn screening, the department shall collect newborn screening specimens and data, test the specimens for disorders on the universal screening panel, conduct follow-up on abnormal screening results, conduct quality improvement and quality assurance activities, and store specimens for a time period determined by policies established by the CIDAC and the department.

4.3(2) *Newborn blood spot screening procedure for facilities and providers.*

a. *Educating parent or guardian.* Before a specimen from an infant is obtained, a parent or guardian shall be informed of the type of specimen, how it is obtained, the nature of the disorders for which the infant is being screened, the consequences of treatment and nontreatment, and the retention, use and disposition of residual specimens.

b. *Refusal of screening.* Should a parent or guardian refuse the screening, said refusal shall be documented in the infant's medical record, and the parent or guardian shall sign the refusal of screening form. The birthing facility or attending health care provider shall submit the signed refusal of screening form to the central laboratory within six days of the refusal. The birthing facility or attending health care

provider may submit refusal forms via the courier service established for the transportation of newborn screening specimen collection forms.

c. *Collection of specimens.* A filter paper blood specimen shall be collected from the infant between 24 to 48 hours after the infant's birth. A specimen shall not be collected from an infant less than 24 hours after birth except as follows:

(1) A blood specimen must be collected before any initial transfusion, even if the infant is less than 24 hours old.

(2) A blood specimen must be collected before the infant leaves the hospital, whether by discharge or by transfer to another hospital, even if the infant is less than 24 hours old.

d. *Submission of specimens.* All specimens shall be delivered via courier service or, if courier service is not available, forwarded by first-class mail or other appropriate means within 24 hours after collection to the SHL.

e. *Informed consent for the release of residual specimens for research use.* The department shall establish policies and procedures, including an informed consent for release of specimens for research, to allow a parent or guardian the ability to provide informed consent prior to the release of the newborn's residual newborn screening specimen for research purposes. The parent or guardian, birthing facility or attending health care provider shall submit the informed consent form to the central laboratory pursuant to established policy and procedure. The informed consent procedure shall apply to all specimens collected on or after January 1, 2016. For specimens collected prior to January 1, 2016, a parent or guardian may send a letter stating that the newborn's specimen is not to be released for research purposes. This letter shall include the parent's or guardian's name, the newborn's name at birth, and the newborn's date of birth. The letter of notice shall be sent to the State Hygienic Laboratory at Newborn Screening Program, State Hygienic Laboratory, 2220 S. Ankeny Blvd., Ankeny, Iowa 50023-9093.

4.3(3) *Primary health care provider responsibility.*

a. The health care provider shall ensure that infants under the provider's care are screened.

b. Procedures for specimen collection for newborn blood spot screening shall be followed in accordance with 4.3(2).

c. A physician or other health care professional who undertakes primary pediatric care of an infant delivered in Iowa shall arrange for the newborn screening if a newborn screening result is not in the infant's medical record.

4.3(4) *Birthing facility.* The birthing facility shall ensure that all infants receive newborn screening.

a. Designee. Each birthing facility shall designate an employee to be responsible for the newborn screening program in that institution.

b. Procedures for specimen collection for newborn screening shall be followed in accordance with 4.3(2).

c. Transfer. The following shall apply if an infant is transferred:

(1) If an infant is transferred within the hospital for acute care, the newborn nursery shall notify the acute care unit of the status of the newborn screening. The acute care unit shall then be responsible for the status of the newborn screening prior to discharge of the infant.

(2) If the infant is transferred to another facility within the state, the facility shall notify the receiving facility of the status of the newborn screening. The receiving facility shall then be responsible for completion of the newborn screening prior to discharge of the infant.

d. Discharge. Each birthing facility shall collect a newborn screening specimen on every infant prior to discharge, including under the following circumstances:

(1) The infant is discharged or transferred to another facility before the infant is 24 hours old.

(2) The infant is born with a condition that is incompatible with life.

(3) The infant has received a transfusion.

e. Notification. The birthing facility shall report the newborn screening results to the health care provider who has undertaken ongoing primary pediatric care of the infant.

4.3(5) *SHL responsibility.* The SHL shall:

a. Contract with a courier service to provide transportation and delivery of newborn screening specimens.

b. Contact all birthing facilities to inform them of the courier schedule.

c. Process specimens within 24 hours of receipt.

d. Notify the submitting health care provider, birthing facility, or drawing laboratory of an unacceptable specimen and the need for another specimen.

e. Report a presumptive positive screen result within 24 hours to the consulting physician or the physician's designee.

f. Distribute specimen collection forms, specimen collection procedures, refusal of newborn screening forms, and other materials to drawing laboratories, birthing facilities, and health care providers.

g. Report normal and abnormal screening results to the submitting facility or provider.

h. Submit a written annual report of the previous calendar year to the center by July 1of each year. This report shall include:

(1) Number of infants screened,

(2) Number of repeat screens,

(3) Number of presumptive positive results by disorder,

(4) Number of rejected specimens,

(5) Number of waivers,

(6) Results of quality assurance testing including any updates to the INSP quality assurance policies, and

(7) Screening and educational activity details.

i. In collaboration with the program consulting physicians, submit a proposed budget and narrative justification for the upcoming state fiscal year by January 31 of each year.

j. Act as fiscal agent for program expenditures encompassing the analytical, technical, administrative, educational, and follow-up costs for the screening program.

k. Submit a fiscal expenditures report to the center within 90 days after the end of the state fiscal year.

4.3(6) *Follow-up program responsibility.* Follow-up programs shall be available for all individuals identified by the newborn screening as having an abnormal screen result.

a. The follow-up activities shall include care coordination, consultation, recommendations for treatment when indicated, case management, education and quality assurance.

b. The follow-up programs shall submit a written annual report of the previous calendar year by July 1 of each year. The report shall include:

(1) The number of presumptive positive results and confirmed positive results by disorder,

(2) Number of confirmed cases receiving follow-up,

(3) A written summary of educational and follow-up activities.

c. In collaboration with the SHL, the follow-up programs shall submit a proposed budget and narrative justification for the upcoming fiscal year to the center by January 31 of each year.

d. The follow-up programs shall submit a fiscal expenditures report to the center within 90 days of the end of the state fiscal year.

4.3(7) *Sharing of information and confidentiality.* Reports, records, and other information collected by or provided to the Iowa newborn screening program relating to an infant's newborn screening results and follow-up information are confidential records pursuant to Iowa Code sections 22.7 and 136A.7. INSP data may be retained indefinitely.

a. Personnel of the program shall maintain the confidentiality of all information and records used in the review and analysis of newborn screening and follow-up, including information that is confidential under Iowa Code chapter 22 or any other provisions of state law.

b. The program shall not release confidential information except to the following persons and entities, under the following conditions:

(1) The parent or guardian of an infant or child or the adult individual for whom the report is made.

(2) A primary health care provider, birthing facility, or submitting laboratory.

(3) A representative of a state or federal agency, to the extent that the information is necessary to perform a legally authorized function of that agency or the department. The state or federal agency will

be subject to confidentiality regulations which are the same as or more stringent than those in the state of Iowa.

(4) A researcher, upon documentation of parental consent obtained by the researcher, and only to the extent that the information is necessary to perform research authorized by the department.

4.3(8) *Retention, use and disposition of residual newborn screening specimens.*

a. A newborn screening specimen collection form consists of a filter paper containing the dried blood spots (DBS) specimen and the attached requisition that contains information about the infant and birthing facility or drawing laboratory. The DBS specimen can be separated from the information contained in the requisition form. The INSP is the custodian of the specimens and related data for purposes of newborn screening, quality improvement and quality assurance activities.

(1) The residual DBS specimen shall be held for five years in a locked area at the SHL.

(2) The residual DBS specimen shall be stored for the first year at −70 degrees C.

(3) After one year, the residual DBS specimen shall be archived for four additional years at room temperature.

(4) The residual DBS specimen shall be incinerated after completion of the retention period.

b. The program shall not release a residual newborn screening specimen except to the following persons and entities:

(1) The parent or guardian of the infant or the individual adult upon whom the screening was performed.

(2) A health care provider acting on behalf of the patient.

(3) A medical examiner authorized to conduct an autopsy on a child or an investigation into the death of a child.

(4) A researcher for research purposes, under the terms and conditions provided in this rule.

(5) The newborn screening program, for operations as provided in this rule.

c. Research. A residual newborn screening specimen may be released for research purposes only if written consent has been received from a parent or guardian of the child, or the individual adult upon whom the screening was performed, and each of the following conditions is satisfied:

(1) Investigators shall submit proposals to use residual newborn screening specimens to the center. Any intended use of the requested specimens as part of the research study must be clearly delineated in the proposal.

(2) Before research can commence, proposals shall be approved by the researcher's institutional review board, the congenital and inherited disorders advisory committee, and the department.

(3) Research on anonymized or identifiable residual newborn screening specimens shall be allowed only in instances where research would further: newborn screening activities; the health of an infant or child for whom no other specimens are available or readily attainable; general medical knowledge for existing public health surveillance activities; public health purposes; or medical knowledge to advance the public health.

d. Newborn screening program operations. Residual newborn screening specimens may be used for activities, testing, and procedures directly related to the operation of the newborn screening program, including confirmatory testing, laboratory quality control assurance and improvement, calibration of equipment, evaluation and improvement of the accuracy of newborn screening tests, and validation of equipment and screening methods, and the use of linked specimens in feasibility studies approved by the Congenital and Inherited Disorders Advisory Committee for the purpose of incorporating new tests or evaluating new test methodologies.

e. Prohibited uses. A residual newborn screening specimen shall not be released to any person or entity for commercial purposes or law enforcement purposes or to establish a database for forensic identification.

4.3(9) *Newborn screening for critical congenital heart disease.* All newborns and infants born in Iowa shall receive newborn screening for CCHD, by pulse oximetry or other means in accordance with subparagraph 4.3(9)*"b"*(3). The purpose of newborn screening for CCHD is to identify newborns with structural heart defects usually associated with hypoxia in the newborn period which could

have significant morbidity or mortality early in life with the closing of the ductus arteriosus or other physiological changes early in life.

a. Newborn CCHD screening procedure for providers and facilities.

(1) Educating parent or guardian. Before newborn screening for CCHD on an infant is conducted, a parent or guardian shall be informed of the type of screening, how it is performed, the nature of the disorders for which the infant is being screened, and the follow-up procedure for an abnormal screen result.

(2) Refusal. Should a parent or guardian refuse the screening, said refusal shall be documented in the infant's medical record, and the parent or guardian shall sign the refusal of screening form. The birthing facility or attending health care provider shall submit the signed refusal form to the central laboratory within six days of the refusal. The birthing facility or attending health care provider may submit refusal forms via the courier service established for the transportation of newborn screening specimen collection forms.

b. Newborn CCHD screening for newborns in low-risk or intermediate nurseries or out-of-hospital births.

(1) Screening should not begin until the newborn is at least 24 hours of age, or as late as possible if earlier discharge is planned, and should be completed on the second day of life.

(2) Screening shall be conducted using pulse oximeters or other means in accordance with subparagraph 4.3(9)*"b"*(3). Pulse oximeters shall:

1. Be motion tolerant;
2. Report functional oxygen saturation;
3. Be validated in low-perfusion conditions;
4. Be cleared by the Food and Drug Administration (FDA) for use on newborns; and
5. Have a 2 percent root-mean-square accuracy.

Disposable or reusable probes may be used. Reusable probes must be appropriately cleaned between uses according to manufacturer's instructions.

(3) Newborn CCHD screening shall be conducted by pulse oximetry or other means in accordance with the most recently published guidelines, algorithms, and protocols as outlined by the American Academy of Pediatrics, the American College of Cardiology Foundation and the American Heart Association, or subsequent guidance by the organizations listed in this subparagraph. Materials are available on the CCID Web page at http://idph.state.ia.us/genetics/newborn_screening.asp.

c. Newborn CCHD screening for high-risk newborns in neonatal intensive care settings (NICU). Until such time that an evidence-based protocol for CCHD screening in infants discharged from the NICU is available, the attending health care provider shall conduct a comprehensive examination of the newborn to screen the infant for CCHD prior to discharge.

d. Primary health care provider responsibility. The health care provider shall ensure that infants under the provider's care are screened.

e. Reporting results of newborn CCHD screening. At such time as the CCHD reporting system is implemented, results of newborn CCHD screening shall be reported in a manner consistent with other newborn screening (formerly referenced as metabolic screening) reporting.

4.3(10) *INSP and IMPSP fees.*

a. The department shall annually review and determine the fee to be charged for all activities associated with the INSP and the IMPSP. The review and fee determination shall be completed at least one month prior to the beginning of the fiscal year. The newborn screening fee is $122.

b. The department shall include as part of the INSP fee an amount determined by the committee and department to fund the provision of special medical formula and foods for eligible individuals with inherited diseases of amino acids and organic acids who are identified through the programs.

c. Funds collected through newborn screening fees shall be used for newborn screening program activities only.

d. Funds collected through maternal prenatal screening fees shall be used for maternal prenatal screening activities only.

e. In order to support newborn and maternal prenatal screening activities, the department shall authorize the expenditure and exchange of newborn screening and maternal prenatal screening funds between the SHL (as designated fiscal agent) and the department.

f. Upon department approval of proposed budgets, a portion of INSP and IMPSP fees shall be distributed to the department to support the percent of effort of the executive officer of the center for congenital and inherited disorders (CCID).

4.3(11) *Special medical formula and foods program.*

a. A special medical formula and foods program for individuals with inherited diseases of amino acids and organic acids who are identified through the Iowa newborn screening program is provided by the University of Iowa.

b. Payments received from clients based on third-party payment, sliding fee scales and donations shall be used to support the administration of and the purchase of special medical formula and foods.

c. The funding allocation from the Iowa newborn screening program fee will be used as the funder of last resort after all other available funding options have been pursued by the special medical formula and foods program.

d. Provisions of special medical formula and foods through this funding allocation shall be available to an individual only after the individual has shown that all benefits from third-party payers including, but not limited to, health insurers, health maintenance organizations, Medicare, Medicaid, WIC and other government assistance programs have been exhausted. In addition, a full fee and a sliding fee scale shall be established and used for those persons able to pay all or part of the cost. Income and resources shall be considered in the application of the sliding fee scale. Individuals whose income is at or above 185 percent of the federal poverty level shall be charged a fee for the provision of special medical formula and foods. Placement of individuals on the sliding fee scale shall be determined and reviewed at least annually.

e. The SHL shall act as the fiscal agent.

f. The University of Iowa Hospitals and Clinics under the control of the state board of regents shall not receive indirect costs from state funds appropriated for this program.

[**ARC 7981B**, IAB 7/29/09, effective 9/2/09; **ARC 0664C**, IAB 4/3/13, effective 5/8/13; **ARC 1747C**, IAB 12/10/14, effective 1/14/15]

641—4.4(136A) Iowa maternal prenatal screening program (IMPSP). This program provides comprehensive maternal prenatal screening services for the state.

4.4(1) *Maternal screening policy.* It shall be the policy of the state of Iowa that all pregnant women are offered maternal prenatal screening. The Iowa maternal prenatal screening program provides a risk assessment for open neural tube defects, ventral wall defects, Down syndrome, and Trisomy 18.

a. If a patient desires this screening test, her health care provider shall direct that a specimen be drawn and submitted to the SHL.

b. As new technologies and tests become available, the center shall follow protocols developed by the department with regard to the addition of disorders to or the deletion of disorders from the screening program.

4.4(2) *Maternal screening procedure.*

a. *Collection of specimens.* A serum or clotted blood specimen shall be collected from the patient within the appropriate gestational range indicated by the requested screen.

b. *Processing of specimens.* The SHL shall test specimens within three working days of receipt.

c. *Reporting of abnormal results.* Abnormal screen results shall be reported within 24 hours to the consulting physician or the physician's designee who shall then notify the primary health care provider. On the next working day, this initial report shall be followed by a written report to the primary health care provider.

4.4(3) *Consulting physician responsibility.* A consulting physician shall be designated by the center in collaboration with the SHL to provide interpretation of screen results and consultation to the submitting health care provider. This physician shall provide consultation for abnormal screen results, assist with questions about management of identified cases, provide education and assist with quality assurance measures. The screening program, with assistance from the consulting physician, shall:

a. In collaboration with the SHL, submit a proposed budget and narrative justification for the upcoming fiscal year to the center by January 31 of each year, and

b. Submit a written annual report of the previous calendar year to the center by July 1 of each year. The report shall include:

(1) Number of women screened,

(2) Number of repeat screens,

(3) Number of abnormal results by disorder,

(4) Number of rejected specimens,

(5) Results of quality assurance testing, and

(6) Screening and educational activity details.

4.4(4) *SHL responsibility.* The SHL shall:

a. Contract with a courier service to provide transportation and delivery of maternal prenatal serum specimens.

b. Contact all entities submitting specimens to inform them of the courier's schedule.

c. Test specimens within three working days of receipt.

d. Distribute specimen collection kits and other materials to health care provider offices and drawing facilities as required.

e. Inform the submitting health care provider or drawing facility of an unacceptable specimen and request another specimen.

f. Provide educational materials concerning specimen collection procedures.

g. Have available for review a written quality assurance program covering all aspects of its screening activity.

h. Act as a fiscal agent for program charges encompassing the analytical, technical, administrative, educational and follow-up costs for the screening program.

4.4(5) *IMPSP fee determination.* The department shall annually review and determine the fee to be charged for all activities associated with the IMPSP. The review and determination of the fee shall be completed at least one month prior to the beginning of the fiscal year.

4.4(6) *Sharing of information and confidentiality.* Reports, records, and other information collected by or provided to the IMPSP relating to a patient's maternal prenatal screening results and follow-up information are confidential records pursuant to Iowa Code section 22.7.

a. Personnel of the program shall maintain the confidentiality of all information and records used in the review and analysis of maternal serum screening and follow-up, including information that is confidential under Iowa Code chapter 22 or any other provisions of state law.

b. The program shall not release confidential information except to the following persons and entities, under the following conditions:

(1) The patient for whom the report is made.

(2) A primary health care provider or submitting laboratory.

(3) A representative of a state or federal agency, to the extent that the information is necessary to perform a legally authorized function of that agency or the department. The state or federal agency will be subject to confidentiality regulations which are the same as or more stringent than those in the state of Iowa.

(4) A researcher, upon documentation of patient consent obtained by the researcher, and only to the extent that the information is necessary to perform research authorized by the department and the state board of health.

4.4(7) *Retention, use and disposition of residual maternal prenatal screening specimens.*

a. A maternal serum screening specimen collection consists of laboratory tubes with maternal serum and associated information about the patient, health care provider, or drawing laboratory.

(1) The residual serum specimens shall be held for a specified period of time in a locked area at the SHL in accordance with SHL policy and procedures.

(2) Reserved.

b. Research use.

(1) Investigators shall submit proposals to use residual serum specimens to the center. Any intent to utilize information associated with the requested specimens as part of the research study must be clearly delineated in the proposal.

(2) Before research can commence, proposals shall be approved by the researcher's institutional review board, the congenital and inherited disorders advisory committee, and the department.

(3) Personally identifiable residual specimens or records shall not be disclosed without documentation of informed patient consent obtained by the researcher.

(4) Research on anonymized or identifiable residual specimens shall be allowed in instances where research would further maternal prenatal screening activities or general medical knowledge for existing public health surveillance activities.

[**ARC 7981B**, IAB 7/29/09, effective 9/2/09; **ARC 0664C**, IAB 4/3/13, effective 5/8/13]

641—4.5(136A) Regional genetic consultation service (RGCS). This program provides comprehensive genetic and genomic services statewide through outreach clinics.

4.5(1) *Provision of comprehensive genetic and genomic services.* The department shall contract with the division of medical genetics within the department of pediatrics at the University of Iowa to provide genetic and genomic health care and education outreach services for individuals and families within Iowa. The contractor shall provide annual reports to the department as specified in the contract.

4.5(2) *Clinical services.* The services provided may include, but are not limited to: diagnostic evaluations, confirmatory testing, consultation by board-certified geneticists, genetic counseling, medical case management, and referral to appropriate agencies.

4.5(3) The University of Iowa Hospitals and Clinics under the control of the state board of regents shall not receive indirect costs from state funds appropriated for this program.

[**ARC 0664C**, IAB 4/3/13, effective 5/8/13]

641—4.6(136A) Neuromuscular and other related genetic disease program (NMP). This program provides comprehensive services statewide for individuals and families with neuromuscular disorders through outreach clinics and statewide, active surveillance for selected neuromuscular disorders.

4.6(1) Provision of comprehensive services. The department shall contract with the department of pediatrics at the University of Iowa to provide neuromuscular health care, case management and education outreach services for individuals and families within Iowa. The contractor shall provide annual reports to the department as specified in the contract.

4.6(2) Clinical services. The services provided may include, but are not limited to: diagnostic evaluations, confirmatory testing, physical therapy, consultation by board-certified neurologists, genetic counseling, medical case management, supportive services and referral to appropriate agencies.

4.6(3) The University of Iowa Hospitals and Clinics under the control of the state board of regents shall not receive indirect costs from state funds appropriated for this program.

[**ARC 7981B**, IAB 7/29/09, effective 9/2/09; **ARC 1747C**, IAB 12/10/14, effective 1/14/15]

641—4.7(136A) Iowa registry for congenital and inherited disorders (IRCID). This program provides active statewide surveillance for congenital and inherited disorders. These disorders may include birth defects, neuromuscular disorders, metabolic disorders, and all stillbirths. The program also may conduct active statewide surveillance of live births without a reportable congenital or inherited disorder to serve as controls for epidemiological surveys. Surveillance activities for specific congenital and inherited disorders will be conducted for the period of time that adequate financial support is available.

4.7(1) *Definitions.*

a. Birth defects shall be defined as any major structural abnormality or metabolic disorder that may adversely affect a child's health and development. The abnormality or disorder must be diagnosed or its signs and symptoms must be recognized within the first two years of life.

b. Neuromuscular disorders shall be defined as Duchenne, Becker, congenital, distal, Emery-Dreifuss, fascioscapulohumeral, limb-girdle, myotonic, and oculopharyngeal muscular dystrophies.

c. Rescinded IAB 4/3/13, effective 5/8/13.

d. Stillbirths shall be defined as an unintended fetal death occurring after a gestational period of 20 completed weeks or an unintended fetal death of a fetus with a weight of 350 or more grams. Stillbirth is synonymous with fetal death.

e. A reportable congenital or inherited disorder occurring in a miscarriage or pregnancy may be included in the IRCID.

4.7(2) *Surveillance policy.*

a. Congenital disorders, including birth defects, occurring in Iowa are reportable conditions, and records of these disorders shall be abstracted pursuant to 641—1.3(139A) and maintained in the IRCID. Congenital disorders surveillance shall be performed in order to determine the occurrence and trends of such disorders, to determine co-occurring conditions and treatments through annual follow-up abstraction, to conduct thorough and complete epidemiological surveys to identify environmental and genetic risk factors for congenital disorders, to contribute to prevention strategies, and to assist in the planning for and provision of services to children with congenital disorders and their families.

b. Records for neuromuscular disorders shall be abstracted pursuant to 641—1.3(139A) and maintained in the IRCID. Neuromuscular disorders surveillance for individuals of all ages shall be performed in order to determine the occurrence and trends of the selected neuromuscular disorders, to determine co-occurring conditions and treatments through annual follow-up abstraction, to conduct thorough and complete epidemiological surveys through annual long-term follow-up, and to assist in the planning for and provision of services to individuals with selected neuromuscular disorders and their families.

c. Rescinded IAB 4/3/13, effective 5/8/13.

d. Stillbirths occurring in Iowa are reportable conditions, and records of these stillbirths shall be abstracted pursuant to 641—1.3(139A) and maintained in the IRCID. Stillbirth surveillance shall be performed in order to determine the occurrence and trends of stillbirths, to conduct thorough and complete epidemiological surveys to identify environmental and genetic risk factors for stillbirths, and to assist in the planning for and provision of services to prevent stillbirths.

4.7(3) *IRCID activities.*

a. The center shall establish an agreement with the University of Iowa to implement the activities of the IRCID.

b. The IRCID shall use the birth defects, neuromuscular disorders, metabolic disorders, and stillbirth coding schemes developed by the Centers for Disease Control and Prevention (CDC).

c. The IRCID staff shall review hospital records, clinical charts, physician's records, vital records, prenatal records, and fetal death evaluation protocols pursuant to 641—1.3(139A), information from the INSP, RGCS, NMP, and the IMPSP, and any other information that the IRCID deems necessary and appropriate for congenital and inherited disorders surveillance.

4.7(4) *Department responsibility.*

a. When a live infant's medical records are ascertained by the IRCID, the department or its designee shall inform the parent or legal guardian by letter that this information has been collected and provide the parent or guardian with information about services for which the child and family may be eligible.

b. The center and the IRCID shall annually release aggregate medical and epidemiological information to medical personnel and appropriate state and local agencies for the planning and monitoring of services for children with congenital or inherited disorders and their families.

4.7(5) *Confidentiality and disclosure of information.* Reports, records, and other information collected by or provided to the IRCID relating to a person known to have or suspected of having a congenital or inherited disorder are confidential records pursuant to Iowa Code sections 22.7 and 136A.7.

a. Personnel of the IRCID and the department shall maintain the confidentiality of all information and records used in the review and analysis of congenital or inherited disorders, including information which is confidential under Iowa Code chapter 22 or any other provisions of state law.

b. IRCID staff are authorized pursuant to 641—1.3(139A) to gather all information relevant to the review and analysis of congenital or inherited disorders. This information may include, but is not limited to, hospital records, physician's records, clinical charts, vital records, prenatal records, fetal death evaluation protocols, information from the INSP, RGCS, NMP, and the IMPSP, and any other information that the IRCID deems necessary and appropriate for congenital and inherited disorders surveillance. IRCID staff are permitted to review hospital records, clinical charts, physician's records, vital records, and prenatal records, information from the INSP, RGCS, NMP, and IMPSP and any other information that the IRCID deems necessary and appropriate for live births without a reportable congenital or inherited disorder to serve as controls for epidemiological surveys.

c. No individual or organization providing information to the IRCID in accordance with this rule shall be deemed or held liable for divulging confidential information.

4.7(6) *Access to information in the IRCID.* The IRCID and the department shall not release confidential information except to the following, under the following conditions:

a. The parent or guardian of an infant or child for whom the report is made and who can demonstrate that the parent or guardian has received the notification letter.

b. An Early ACCESS service coordinator or an agency under contract with the department to administer the children with special health care needs program, upon receipt of written consent from the parent or guardian of the infant or child.

c. A local health care provider, upon receipt of written consent from the parent or guardian of the infant or child.

d. A representative of a federal agency, to the extent that the information is necessary to perform a legally authorized function of that agency or the department. The information provided shall not include the personal identifiers of an infant or child with a reportable congenital or inherited disorder.

e. Researchers, in accordance with the following:

(1) All proposals for research using the IRCID data to be conducted by persons other than program staff shall first be submitted to and accepted by the researcher's institutional review board. Proposals shall then be reviewed and approved by the department and the IRCID's internal advisory committee before research can commence.

(2) The IRCID shall submit to the IRCID's internal advisory committee for approval a protocol describing any research conducted by the IRCID in which the IRCID deems it necessary to contact case subjects and controls.

f. A representative of a state agency, to the extent that the information is necessary to perform a legally authorized function of that agency or the department. The state agency will be subject to confidentiality regulations that are the same as or more stringent than those in the state of Iowa.

[**ARC 7981B**, IAB 7/29/09, effective 9/2/09; **ARC 0664C**, IAB 4/3/13, effective 5/8/13]

641—4.8(135) Iowa's early hearing detection and intervention program. The goal of universal hearing screening of all newborns and infants in Iowa is the early detection of hearing loss to allow children and their families the earliest possible opportunity to obtain appropriate early intervention services. All newborns and infants born in Iowa, except those born with a condition that is incompatible with life, shall be screened for hearing loss. Early hearing detection and intervention programming and services will be provided pursuant to 641—Chapter 3.

[**ARC 1747C**, IAB 12/10/14, effective 1/14/15]

641—4.9 and **4.10** Reserved.

CENTER FOR CONGENITAL AND INHERITED DISORDERS ADVISORY COMMITTEE (CIDAC)

641—4.11(136A) Purpose. CIDAC represents the interests of the people of Iowa and assists in the development of programs that ensure the availability of and access to quality genetic and genomic health care services by all residents. The committee advises the director regarding issues related to genetics and hereditary and congential disorders.

[**ARC 0664C**, IAB 4/3/13, effective 5/8/13]

641—4.12(136A) Duties of the committee. CIDAC shall perform the following duties:

4.12(1) Make recommendations about the design and implementation of the center's programs, including but not limited to:

a. The Iowa newborn screening program;

b. The regional genetics consultation service;

c. The maternal prenatal screening program;

d. The neuromuscular and related genetic disorders program; and

e. The Iowa registry for congenital and inherited disorders.

4.12(2) Support the development of special projects and conferences regarding genetic and genomic health care services and issues.

4.12(3) Advocate for quality genetic and genomic health care services for all residents in the state of Iowa.

[**ARC 0664C**, IAB 4/3/13, effective 5/8/13]

641—4.13(136A) Membership. Membership will be comprised of representatives of professional groups, agencies, legislators, parents, consumers, and professional health care providers.

4.13(1) CIDAC shall be comprised of regular, ex officio, and honorary members.

a. Potential regular members are considered from interest groups, consumer organizations, and genetic and genomic health care service providers. Two parent representatives and two consumer representatives shall serve as regular members of CIDAC.

b. The number of regular members shall not be fewer than 15 or more than 25.

c. No more than 30 percent of regular members shall be representatives of or employed by programs that are contractors of the center for congenital and inherited disorders in the Iowa department of public health.

d. Honorary members will be comprised of two legislators, one state senator and one state representative, and others deemed appropriate by the director.

e. Ex officio members are nominated by virtue of their positions held and the organizations they represent and are appointed by the director. These members provide expert information and consultation to CIDAC.

4.13(2) Every effort will be made to have gender balance and broad geographic representation on the advisory committee.

4.13(3) The director will appoint regular and honorary committee members for three fiscal years. Reappointment of regular and honorary members shall be at the discretion of the director.

[**ARC 0664C**, IAB 4/3/13, effective 5/8/13]

641—4.14(136A) Meetings.

4.14(1) Meetings of the committee will be held as necessary and at the call of the director or the chairperson. There shall be a minimum of four meetings per year.

4.14(2) All meetings are open to the public in accordance with the open meetings law, Iowa Code chapter 21.

4.14(3) A majority of the total number of regular members (50 percent plus one member) shall constitute a quorum. There must be a quorum of the regular members in attendance at a meeting for action to be taken.

4.14(4) Action can be taken by a vote of the regular members. Ex officio and honorary members are not eligible to vote.

4.14(5) Regular members who represent programs that are contractors of the center for congenital and inherited disorders in the department are expected to refrain from imposing undue influence on regular members and to recuse themselves from voting on issues which directly affect the operation of their programs.

4.14(6) Meeting attendance.

a. Attendance at a meeting is defined as presence at the meeting site in person, through the Iowa communications network (ICN), through webinar or web meeting, or via telephone.

b. Attendance by the regular member or the regular member's designee shall be expected at all meetings.

(1) A designee of similar standing must be able to reasonably fulfill the member's role on the committee in discussions.

(2) Designees are not eligible to vote.

c. Regular members, not designees, must attend at least two meetings per fiscal year to remain in good standing.

d. A regular member who misses more than three meetings in a fiscal year shall be deemed to have submitted a resignation.

[**ARC 0664C**, IAB 4/3/13, effective 5/8/13]

These rules are intended to implement Iowa Code chapter 136A.

[Filed November 20, 1970]
[Filed 2/12/82, Notice 12/23/81—published 3/3/82, effective 4/7/82]
[Filed emergency 7/15/83—published 8/3/83, effective 7/15/83]
[Filed emergency 9/23/83—published 10/12/83, effective 9/23/83]
[Filed emergency 5/11/84—published 6/6/84, effective 5/11/84]
[Filed 11/15/85, Notice 8/14/85—published 12/4/85, effective 1/8/86]
[Filed 12/8/86, Notice 9/24/86—published 12/31/86, effective 2/4/87]
[Filed emergency 7/10/87—published 7/29/87, effective 7/10/87]
[Filed 11/30/87, Notice 10/21/87—published 12/16/87, effective 1/20/88]
[Filed 1/10/92, Notice 8/7/91—published 2/5/92, effective 3/11/92]
[Filed emergency 7/14/95 after Notice 6/7/95—published 8/2/95, effective 7/14/95]
[Filed 9/14/01, Notice 8/8/01—published 10/3/01, effective 11/7/01]
[Filed 9/11/02, Notice 8/7/02—published 10/2/02, effective 11/6/02]
[Filed 9/12/03, Notice 8/6/03—published 10/1/03, effective 11/5/03]
[Filed 7/16/04, Notice 6/9/04—published 8/4/04, effective 9/8/04]
[Filed emergency 7/13/05 after Notice 5/25/05—published 8/3/05, effective 7/13/05]
[Filed emergency 7/27/06 after Notice 6/21/06—published 8/16/06, effective 7/27/06]
[Filed 9/13/07, Notice 8/1/07—published 10/10/07, effective 11/14/07]
[Filed ARC 7981B (Notice ARC 7791B, IAB 5/20/09), IAB 7/29/09, effective 9/2/09]
[Filed ARC 0664C (Notice ARC 0572C, IAB 1/23/13), IAB 4/3/13, effective 5/8/13]
[Filed ARC 1747C (Notice ARC 1471C, IAB 5/28/14; Amended Notice ARC 1567C, IAB 8/6/14), IAB 12/10/14, effective 1/14/15]

CHAPTER 5
MATERNAL DEATHS
[Prior to 7/29/87, Health Department[470]]

641—5.1(135) Reporting of maternal deaths. A maternal death is any death occurring while a woman is pregnant or of a woman within one year after delivery. This includes but is not limited to deaths resulting from abortions, ectopic pregnancies and all deaths during pregnancy, childbirth, puerperium or deaths from complications of childbirth. In the event of a maternal death, the certifying physician shall indicate that circumstance on the certificate of death.

641—5.2(135) Ascertainment of maternal deaths. The department of public health annually shall systematically ascertain maternal deaths using birth and death vital records.

641—5.3(135) Reviewing of maternal deaths. Hospitals, physicians, and other licensed health care professionals shall provide to the department of public health clinical records pertinent to the review of individual maternal deaths. The release of these materials is a confidential and privileged communication, and no liability shall be attached to the release. Neither the released information nor reports generated from that information shall be allowed in any legal proceedings, pursuant to Iowa Code section 135.42. The department of public health shall ensure a timely, confidential review of all maternal deaths by experts in obstetric medicine and maternal mortality for the purpose of reducing morbidity and mortality. At least every three years, the department shall issue occasional reports on the causes and contributing factors of maternal deaths and recommendations of possible preventive strategies based on those reviews.

These rules are intended to implement Iowa Code section 135.40.

[Filed November 20, 1970; amended October 15, 1973]
[Filed emergency 7/10/87—published 7/29/87, effective 7/10/87]
[Filed 11/19/01, Notice 10/3/01—published 12/12/01, effective 1/16/02]

CHAPTER 6
VENEREAL DISEASE PROPHYLACTICS

[Prior to 7/29/87, Health Department[470]]

Rescinded IAB 6/2/10, effective 7/7/10

CHAPTER 7
IMMUNIZATION AND IMMUNIZATION EDUCATION: PERSONS ATTENDING ELEMENTARY OR SECONDARY SCHOOLS, LICENSED CHILD CARE CENTERS OR INSTITUTIONS OF HIGHER EDUCATION

[Prior to 7/29/87, Health Department[470]]

641—7.1(139A) Definitions.

"Admitting official" means the superintendent of schools or the superintendent's designated representative if a public school; if a nonpublic school or licensed child care center, the governing official of the school or child care center.

"Advanced registered nurse practitioner" or *"ARNP"* means an advanced registered nurse practitioner as defined in 655—7.1(152).

"Applicant" means any person seeking enrollment in a licensed child care center or elementary or secondary school.

"Certified medical assistant" means a person who is certified to practice as a certified medical assistant following completion of a postsecondary medical assistant program accredited by the Commission on Accreditation of Allied Health Education Programs or the Accrediting Bureau of Health Education Schools and successful completion of the certification examination and who is directed by a supervising physician, physician assistant, or nurse practitioner.

"Competent private instruction" means private instruction as defined by the department of education pursuant to Iowa Code section 299A.1.

"Department" means the Iowa department of public health.

"Electronic signature" means a confidential personalized digital key, code, or number that is used for secure electronic data transmission and that identifies and authenticates the signatory.

"Elementary school" means kindergarten if provided, and grades one through eight or grades one through six when grades seven and eight are included in a secondary school.

"Enrolled user" means a user of the registry who has completed an enrollment form that specifies the conditions under which the registry can be accessed and who has been issued an identification code and password by the department.

"Health screening" means a vision screen or dental screen.

"Immunization registry" or *"registry"* means the database and file server maintained by the department as well as the software application that allows enrolled users to exchange immunization or health screening records.

"Institution of higher education" means a postsecondary school.

"Licensed child care center" means a facility or program licensed by the Iowa department of human services to provide child care for seven or more children or a prekindergarten or preschool, regardless of the source of funding, operated by a local school district, an accredited nonpublic school, an area education agency, or a college or university.

"Nurse" means a person licensed to practice as a nurse pursuant to Iowa Code chapter 152.

"On-campus residence hall or dormitory" means campus housing for students that is owned or leased by the institution of higher education and located on a recognized campus site.

"Physician" means a person licensed to practice medicine and surgery or osteopathic medicine and surgery pursuant to Iowa Code chapter 148.

"Physician assistant" means a person licensed to practice as a physician assistant pursuant to Iowa Code chapter 148C.

"Postsecondary school" means a postsecondary institution under the control of the state board of regents, a community college established under Iowa Code chapter 260C, or an accredited private institution as defined in Iowa Code section 261.9, subsection 1.

"Postsecondary student" means a person who has officially registered with a postsecondary school, as determined by the school, and who physically attends class on the school's campus. For purposes of these rules, "postsecondary student" does not include a person who is exclusively registered in a correspondence course or continuing education class or who attends class exclusively by means of the

Internet or the Iowa communications network or through other means which do not require the person's physical presence on the school's campus.

"Provisional enrollment" means enrollment for a period of time not to exceed the limit specified in subrule 7.7(2) to allow the applicant to meet the requirements of these rules. A provisionally enrolled applicant is entitled access to all the benefits, activities, and opportunities of the school or licensed child care center. Provisional enrollment shall not deny the school funding for the applicant.

"Screening provider" means an ophthalmologist, optometrist, pediatrician, family practice physician, free clinic, child care center, local public health department, public or accredited nonpublic school, community-based organization, advanced registered nurse practitioner (ARNP), physician assistant, dentist or dental hygienist.

"Secondary school" means (a) a junior high school comprising grades 7, 8 and 9, and a senior high school; (b) a combined junior-senior high school comprising grades 7 through 12; (c) a junior high school comprising grades 7 and 8 and a high school comprising grades 9 through 12; (d) a high school comprising grades 9 through 12.

"Signature" means an original signature or the authorized use of a stamped signature or electronic signature.

"Student" means an individual who is enrolled in a licensed child care center, elementary school or secondary school.

[**ARC 0481C**, IAB 12/12/12, effective 1/16/13; **ARC 1477C**, IAB 6/11/14, effective 7/16/14]

641—7.2(139A) Persons included. The immunization requirements specified elsewhere in these rules apply to all persons enrolled or attempting to enroll in a licensed child care center or a public or nonpublic elementary or secondary school in Iowa including those who are provided competent private instruction.

641—7.3(139A) Persons excluded. Exclusions to these rules are permitted on an individual basis for medical and religious reasons. Applicants approved for medical or religious exemptions shall submit to the admitting official a valid Iowa department of public health certificate of immunization exemption.

7.3(1) To be valid, a certificate of immunization exemption for medical reasons shall contain, at a minimum, the applicant's last name, first name, and date of birth, the vaccine(s) exempted, and an expiration date (if applicable) and shall bear the signature of a physician, nurse practitioner, or physician assistant. A medical exemption may be granted to an applicant when, in the opinion of a physician, nurse practitioner, or physician assistant:

a. The required immunizations would be injurious to the health and well-being of the applicant or any member of the applicant's family or household. In this circumstance, a medical exemption may apply to a specific vaccine(s) or all required vaccines. If, in the opinion of the physician, nurse practitioner, or physician assistant issuing the medical exemption, the exemption should be terminated or reviewed at a future date, an expiration date shall be recorded on the certificate of immunization exemption; or

b. Administration of the required vaccine would violate minimum interval spacing. In this circumstance, an exemption shall apply only to an applicant who has not received prior doses of the exempted vaccine. An expiration date, not to exceed 60 calendar days, and the name of the vaccine exempted shall be recorded on the certificate of exemption.

7.3(2) A religious exemption may be granted to an applicant if immunization conflicts with a genuine and sincere religious belief.

a. To be valid, a certificate of immunization exemption for religious reasons shall contain, at a minimum, the applicant's last name, first name, and date of birth and shall bear the signature of the applicant or, if the applicant is a minor, of the applicant's parent or guardian and shall attest that immunization conflicts with a genuine and sincere religious belief and that the belief is in fact religious and not based merely on philosophical, scientific, moral, personal, or medical opposition to immunizations.

b. The certificate of immunization exemption for religious reasons is valid only when notarized.

7.3(3) Medical and religious exemptions under this rule do not apply in times of emergency or epidemic as determined by the state board of health and declared by the director of public health.

641—7.4(139A) Required immunizations.

7.4(1) Applicants enrolled or attempting to enroll shall have received the following vaccines in accordance with the doses and age requirements below:

IMMUNIZATION REQUIREMENTS

Applicants enrolled or attempting to enroll shall have received the following vaccines in accordance with the doses and age requirements listed below. If, at any time, the age of the child is between the listed ages, the child must have received the number of doses in the "Total Doses Required" column.

Institution	Age	Vaccine	Total Doses Required
Licensed Child Care Center	Less than 4 months of age	This is not a recommended administration schedule, but contains the minimum requirements for participation in licensed child care. **Routine vaccination begins at 2 months of age.**	
	4 months through 5 months of age	Diphtheria/Tetanus/Pertussis	1 dose
		Polio	1 dose
		haemophilus influenzae type B	1 dose
		Pneumococcal	1 dose
	6 months through 11 months of age	Diphtheria/Tetanus/Pertussis	2 doses
		Polio	2 doses
		haemophilus influenzae type B	2 doses
		Pneumococcal	2 doses
	12 months through 18 months of age	Diphtheria/Tetanus/Pertussis	3 doses
		Polio	2 doses
		haemophilus influenzae type B	2 doses; or 1 dose received when the applicant is 15 months of age or older.
		Pneumococcal	3 doses if the applicant received 1 or 2 doses before 12 months of age; or 2 doses if the applicant has not received any previous doses or has received 1 dose on or after 12 months of age.
	19 months through 23 months of age	Diphtheria/Tetanus/Pertussis	4 doses
		Polio	3 doses
		haemophilus influenzae type B	3 doses, with the final dose in the series received on or after 12 months of age, or 1 dose received when the applicant is 15 months of age or older.
		Pneumococcal	4 doses; or 3 doses if the applicant received 1 or 2 doses before 12 months of age; or 2 doses if the applicant has not received any previous doses or has received 1 dose on or after 12 months of age.
		Measles/Rubella[1]	1 dose of measles/rubella-containing vaccine received on or after 12 months of age; or the applicant demonstrates a positive antibody test for measles and rubella from a U.S. laboratory.
		Varicella	1 dose received on or after 12 months of age if the applicant was born on or after September 15, 1997, unless the applicant has had a reliable history of natural disease.
	24 months and older	Diphtheria/Tetanus/Pertussis	4 doses
		Polio	3 doses
		haemophilus influenzae type B	3 doses, with the final dose in the series received on or after 12 months of age; or 1 dose received when the applicant is 15 months of age or older. Hib vaccine is not indicated for persons 60 months of age or older.
		Pneumococcal	4 doses if the applicant received 3 doses before 12 months of age; or 3 doses if the applicant received 2 doses before 12 months of age; or 2 doses if the applicant received 1 dose before 12 months of age or received 1 dose between 12 and 23 months of age; or 1 dose if no doses had been received prior to 24 months of age. **Pneumococcal vaccine is not indicated for persons 60 months of age or older.**
		Measles/Rubella[1]	1 dose of measles/rubella-containing vaccine received on or after 12 months of age; or the applicant demonstrates a positive antibody test for measles and rubella from a U.S. laboratory.
		Varicella	1 dose received on or after 12 months of age if the applicant was born on or after September 15, 1997, unless the applicant has had a reliable history of natural disease.
Elementary or Secondary School (K-12)	4 years of age and older	Diphtheria/Tetanus/ Pertussis[4, 5]	3 doses, with at least 1 dose of diphtheria/tetanus/pertussis-containing vaccine received on or after 4 years of age if the applicant was born on or before September 15, 2000[2]; or 4 doses, with at least 1 dose of diphtheria/tetanus/pertussis-containing vaccine received on or after 4 years of age if the applicant was born after September 15, 2000, but before September 15, 2003[2]; or 5 doses with at least 1 dose of diphtheria/tetanus/pertussis-containing vaccine received on or after 4 years of age if the applicant was born on or after September 15, 2003[2, 3]; and 1 time dose of tetanus/ diphtheria/acellular pertussis-containing vaccine (Tdap) for applicants in grades 7 and above, if born on or after September 15, 2000; regardless of the interval since the last tetanus/diphtheria containing vaccine.
		Polio[7]	3 doses, with at least 1 dose received on or after 4 years of age if the applicant was born on or before September 15, 2003; or 4 doses, with at least 1 dose received on or after 4 years of age if the applicant was born after September 15, 2003.[6]
		Measles/Rubella[1]	2 doses of measles/rubella-containing vaccine; the first dose shall have been received on or after 12 months of age; the second dose shall have been received no less than 28 days after the first dose; or the applicant demonstrates a positive antibody test for measles and rubella from a U.S. laboratory.
		Hepatitis B	3 doses if the applicant was born on or after July 1, 1994.
		Varicella	1 dose received on or after 12 months of age if the applicant was born on or after September 15, 1997, but born before September 15, 2003, unless the applicant has had a reliable history of natural disease; or 2 doses received on or after 12 months of age if the applicant was born on or after September 15, 2003, unless the applicant has a reliable history of natural disease.[8]

[1] Mumps vaccine may be included in measles/rubella-containing vaccine.

[2] DTaP is not indicated for persons 7 years of age or older, therefore, a tetanus-and diphtheria-containing vaccine should be used.

[3] The 5th dose of DTaP is not necessary if the 4th dose was administered on or after 4 years of age.

[4] Applicants 7 through 18 years of age who received their 1st dose of diphtheria/tetanus/pertussis-containing vaccine before 12 months of age should receive a total of 4 doses, with one of those doses administered on or after 4 years of age

[5] Applicants 7 through 18 years of age who received their 1st dose of diphtheria/tetanus/pertussis-containing vaccine at 12 months of age or older should receive a total of 3 doses, with one of those doses administered on or after 4 years of age.

[6] If an applicant received an all-inactivated poliovirus (IPV) or all-oral poliovirus (OPV) series, a 4th dose is not necessary if the 3rd dose was administered on or after 4 years of age.

[7] If both OPV and IPV were administered as part of the series, a total of 4 doses are required, regardless of the applicant's current age.

[8] Administer 2 doses of varicella vaccine, at least 3 months apart, to applicants less than 13 years of age. Do not repeat the 2nd dose if administered 28 days or greater from the 1st dose. Administer 2 doses of varicella vaccine to applicants 13 years of age or older at least 4 weeks apart. The minimum interval between the 1st and 2nd dose of varicella for an applicant 13 years of age or older is 28 days.

7.4(2) Vaccine doses administered less than or equal to 4 days before the minimum interval or age shall be counted as valid. Doses administered greater than or equal to 5 days earlier than the minimum interval or age shall not be counted as valid doses and shall be repeated as appropriate.

7.4(3) For vaccine administration, the minimum age and intervals recommended by the advisory committee on immunization practices shall be followed.

[**ARC 8377B**, IAB 12/16/09, effective 11/18/09; **ARC 8658B**, IAB 4/7/10, effective 5/12/10; **ARC 0481C**, IAB 12/12/12, effective 1/16/13; **ARC 0586C**, IAB 2/6/13, effective 1/16/13]

641—7.5(139A) Required education. Each institution of higher education that has an on-campus residence hall or dormitory shall provide vaccination information on meningococcal disease to each postsecondary student enrolled in the institution of higher education. Meningococcal disease information shall be contained on student health forms. For purposes of this rule, student health form(s) means a document(s) prepared by an institution of higher education that contains, at a minimum, information on meningococcal disease, vaccination information and any recommendations issued by the national Centers for Disease Control and Prevention regarding meningococcal disease. The student health form(s) shall also include space for the postsecondary student to indicate whether or not the postsecondary student has received vaccination against meningococcal disease, including, at a minimum, the date of vaccination. The student health form(s) shall also include space for the postsecondary student to indicate whether or not the postsecondary student has received information on meningococcal disease and benefits of vaccine. If a traditional student health form is not utilized by the institution of higher education, any document(s) containing the above information is acceptable.

641—7.6(139A) Proof of immunization.

7.6(1) A valid Iowa department of public health certificate of immunization shall be submitted by the applicant or, if the applicant is a minor, by the applicant's parent or guardian to the admitting official of the school or licensed child care center in which the applicant wishes to enroll. To be valid, the certificate shall be the certificate of immunization issued by the department, a computer-generated copy from the immunization registry, or a certificate of immunization which has been approved in writing by the department. The certificate shall contain, at a minimum, the applicant’s last name, first name, and date of birth, the vaccine(s) administered, the date(s) given, and the signature of a physician, a physician assistant, a nurse, or a certified medical assistant. A faxed copy, photocopy, or electronic copy of the valid certificate is acceptable. The judgment of the adequacy of the applicant’s immunization history should be based on records kept by the person signing the certificate of immunization or on that person's personal knowledge of the applicant’s immunization history, or comparable immunization records from another person or agency, or an international certificate of vaccination, or the applicant’s personal health records. If personal health records are used to make the judgment, the records shall include the vaccine(s) administered and the date given. Persons validating the certificate of immunization are not held responsible for the accuracy of the information used to validate the certificate of immunization if the information is from sources other than their own records or personal knowledge.

7.6(2) Persons wishing to enroll who do not have a valid Iowa department of public health certificate of immunization available to submit to the admitting official shall be referred to a physician, a physician assistant, a nurse, or a certified medical assistant to obtain a valid certificate.

641—7.7(139A) Provisional enrollment.

7.7(1) A valid Iowa department of public health provisional enrollment certificate shall be submitted by the applicant or, if the applicant is a minor, by the applicant’s parent or guardian to the admitting official of the school or licensed child care center in which the applicant wishes to enroll. Applicants who have begun but not completed the required immunizations may be granted provisional enrollment. To qualify for provisional enrollment, applicants shall have received at least one dose of each of the required vaccines or be a transfer student from another school system. A transfer student is an applicant seeking enrollment from one United States elementary or secondary school into another. To be valid, the certificate shall be the certificate of immunization issued by the department, a computer-generated copy from the immunization registry, or a certificate of immunization which has been approved in writing by

the department. The certificate shall contain, at a minimum, the applicant's last name, first name, and date of birth, the vaccine(s) administered, the date(s) given, the remaining vaccine(s) required, the reason that the applicant qualifies for provisional enrollment, and the signature of a physician, a physician assistant, a nurse, or a certified medical assistant. Persons validating the provisional certificate of immunization are not held responsible for the accuracy of the information used to validate the provisional certificate of immunization if the information is from sources other than their own records or personal knowledge. Persons signing the provisional certificate of immunization shall certify that they have informed the applicant or, if the applicant is a minor, the applicant's parent or guardian of the provisional enrollment requirements.

a. Any applicant seeking provisional enrollment who does not have a valid Iowa department of public health provisional certificate of immunization to submit to the admitting official shall be referred to a physician, a physician assistant, a nurse, or a certified medical assistant to obtain a valid certificate.

b. Reserved.

7.7(2) The amount of time allowed for provisional enrollment shall be as soon as medically feasible but shall not exceed 60 calendar days. The period of provisional enrollment shall begin on the date the provisional certificate is signed. The person signing the provisional certificate shall assign an expiration date to the certificate and shall indicate the remaining immunizations required to qualify for a certificate of immunization.

7.7(3) The applicant or parent or guardian shall ensure that the applicant receive the necessary immunizations during the provisional enrollment period and shall submit a certificate of immunization to the admitting official by the end of the provisional enrollment period.

7.7(4) Rescinded IAB 12/3/08, effective 1/7/09.

7.7(5) If at the end of the provisional enrollment period the applicant or parent or guardian has not submitted a certificate of immunization, the admitting official shall immediately exclude the applicant from the benefits, activities, and opportunities of the school or licensed child care center until the applicant or parent or guardian submits a valid certificate of immunization.

7.7(6) If at the end of the provisional enrollment period the applicant has not completed the required immunizations due to minimum interval requirements, a new Iowa department of public health provisional certificate of immunization shall be submitted to the admitting official. The admitting official must maintain all issued certificates of provisional immunization with the original provisional certificate until the applicant submits a certificate of immunization.

[**ARC 0481C**, IAB 12/12/12, effective 1/16/13]

641—7.8(139A) Records and reporting.

7.8(1) It shall be the duty of the admitting official of a licensed child care center or elementary or secondary school to ensure that the admitting official has a valid Iowa department of public health certificate of immunization, certificate of immunization exemption, or provisional certificate of immunization on file for each student.

a. The admitting official shall keep the certificates on file in the school or licensed child care center in which the student is enrolled and assist the student or parent or guardian in the transfer of the certificate to another school or licensed child care center upon the transfer of the student to another school or licensed child care center.

b. Unless otherwise requested by the applicant, or parent or guardian, the admitting official shall retain the Iowa department of public health certificate of immunization, or certificate of immunization exemption, or provisional certificate of immunization for three years commencing upon the transfer or graduation of the applicant or the school may choose to provide the permanent immunization record to the student at time of graduation. Included with the immunization record a letter should state that this is an important document that will be needed by the student for college or employment and should be permanently retained.

7.8(2) It shall be the duty of the local boards of health to audit the Iowa department of public health certificates of immunization, certificates of immunization exemption, and provisional certificates of immunization in the schools within their jurisdiction to determine compliance with Iowa Code section

139A.8. The local boards of health shall furnish the Iowa department of public health within 60 days of the first official day of school a report of the audit. The report shall be submitted for each school within the local board of health's jurisdiction and shall include the enrollment by grade, and the number of Iowa department of public health certificates of immunization, certificates of immunization exemption, and provisional certificates of immunization by grade.

7.8(3) The local board of health and the Iowa department of public health shall have the right to have access to the Iowa department of public health certificates of immunization, certificates of immunization exemption, and the provisional certificates of immunization of children enrolled in elementary and secondary schools and licensed child care centers within the constraints of the privacy rights of parents and students.

7.8(4) The admitting official of an institution of higher education shall provide to the department of public health by December 1 each year aggregate data regarding compliance with Iowa Code section 139A.26. The data shall be forwarded to the department within 30 days. The data shall include, but not be limited to, the total number of incoming postsecondary freshmen students living in a residence hall or dormitory who have:

a. Enrolled in the institution of higher education; and

b. Been provided information on meningococcal disease; and

c. Been immunized with meningococcal vaccine.

641—7.9(139A) Providing immunization services. It shall be the duty of the local boards of health to provide immunization services where no local provision exists for the services.

641—7.10(139A) Compliance. Applicants not presenting proper evidence of immunization, or exemption, are not entitled to enrollment in a licensed child care center or elementary or secondary school under the provisions of Iowa Code section 139A.8. It shall be the duty of the admitting official to deny enrollment to any applicant who does not submit proper evidence of immunization according to rule 7.6(139A) and to exclude a provisionally enrolled applicant in accordance with rule 7.7(139A).

641—7.11(22) Statewide registry.

7.11(1) *Statewide registry.* The department shall maintain a statewide immunization and health screening registry. Enrolled users are responsible for purchasing and maintaining all computer hardware related to use of the registry and for providing an Internet connection to transfer information between the user's computer and the registry.

7.11(2) *Purpose and permitted uses of registry.*

a. The registry shall contain immunization and health screening information, including identifying and demographic data, to allow enrolled users to maintain and access a database of immunization and health screening histories for purposes of ensuring that patients are fully immunized and screened.

b. The registry may be used to track inventory or utilization of pharmaceutical agents identified by the department to prepare for or respond to an emergency event.

c. Enrolled users shall not use information obtained from the registry to market services to patients or nonpatients, to assist in bill collection services, or to locate or identify patients or nonpatients for any purpose other than those expressly provided in this rule.

d. The registry shall contain health screening data, including screening results and follow-up information.

7.11(3) *Release of information to the registry.* Enrolled users shall provide immunization and health screening information, including identifying and demographic data, to the registry. Information provided may include, but is not limited to, the following:

a. Name of patient;

b. Gender of patient;

c. Date of birth;

d. Race;

e. Ethnicity;

f. Birth state and birth country;
g. Address;
h. Parents' names;
i. Mother's maiden name;
j. Type of vaccination administered;
k. Dose or series number of vaccine;
l. Date vaccination was administered;
m. Lot number;
n. Date of health screening;
o. Health screening results;
p. Source of health screening;
q. Health screening follow-up information;
r. Patient comments;
s. Provider name, license, and business address; and
t. Patient history, including previously unreported doses.

7.11(4) *Confidentiality of registry information.* Immunization and health screening information, including identifying and demographic data maintained on the registry, is confidential and may not be disclosed except under the following limited circumstances:

a. The department may release information from the registry to the following:

(1) The person or the parent or legal guardian of the person immunized or screened.

(2) Enrolled users of the registry who have completed an enrollment form that specifies the conditions under which the registry can be accessed and who have been issued an organization code and user name by the department;

(3) Persons or entities requesting immunization or health screening data in an aggregate form that does not identify an individual either directly or indirectly.

(4) Agencies that complete an agreement with the department which specifies conditions for access to registry data and how that data will be used. Agencies shall not use information obtained from the registry to market services to patients or nonpatients, to assist in bill collection services, or to locate or identify patients or nonpatients for any purposes other than those expressly provided in this rule.

(5) A representative of a state or federal agency, or entity bound by that state or federal agency, to the extent that the information is necessary to perform a legally authorized function of that agency or the department. The state or federal agency is subject to confidentiality regulations that are the same as or more stringent than those in the state of Iowa. State or federal agencies shall not use information obtained from the registry to market services to patients or nonpatients, to assist in bill collection services, or to locate or identify patients or nonpatients for any purposes other than those expressly provided in this rule.

(6) The admitting official of a licensed child care center, elementary school, secondary school, or postsecondary school; or medical or health care providers providing continuity of care.

(7) Enrolled users from other states or jurisdictions who have signed and completed enrollment in the state's or jurisdiction's immunization registry.

b. Enrolled users shall not release data obtained from the registry except to the person or the parent or legal guardian of the person immunized or screened, admitting officials of licensed child care centers and schools, medical or health care providers providing continuity of care, and other enrolled users of the registry.

[**ARC 8377B**, IAB 12/16/09, effective 11/18/09; **ARC 8658B**, IAB 4/7/10, effective 5/12/10; **ARC 0481C**, IAB 12/12/12, effective 1/16/13; **ARC 1477C**, IAB 6/11/14, effective 7/16/14]

641—7.12(22) Release of immunization and health screening information.

7.12(1) *Between a physician, physician assistant, nurse, certified medical assistant, or screening provider and the elementary, secondary, or postsecondary school or licensed child care center that the student attends.* A physician, a physician assistant, a nurse, a certified medical assistant, or a screening provider shall disclose a student's or patient's immunization or health screening information, including

the name, date of birth, and demographic information, the month, day, year and vaccine(s) administered, health screening results and clinic source and location, to an elementary, secondary, or postsecondary school or a licensed child care center upon written or verbal request from the elementary, secondary, or postsecondary school or licensed child care center. Written or verbal permission from a student or parent is not required to release this information to an elementary, secondary, or postsecondary school or licensed child care center that the student attends.

7.12(2) *Among physicians, physician assistants, nurses, certified medical assistants, or screening providers.* Immunization or health screening information, including the student's or patient's last name, first name, date of birth, and demographic information, the month, day, year and vaccine(s) administered, health screening results and clinic source and location, shall be provided by a physician, physician assistant, nurse, certified medical assistant, or screening provider to another health care provider without written or verbal permission from the student, parent, guardian or patient.

7.12(3) *Among an elementary school, secondary school, postsecondary school, and licensed child care center that the student attends.* An elementary school, secondary school, postsecondary school, and licensed child care center shall disclose a student's immunization or health screening information, including the student's last name, first name, date of birth, and demographic information, the month, day, and year of vaccine(s) administered, health screening results and clinic source and location, to another elementary school, secondary school, postsecondary school, and licensed child care center that the student attends. Written or verbal permission from a student, or if the student is a minor, the student's parent or guardian, is not required to release this information to an elementary school, secondary school, postsecondary school, and licensed child care center that the student attends.

7.12(4) *Among the department and a physician, physician assistant, nurse, certified medical assistant, screening provider, elementary school, secondary school, postsecondary school, and licensed child care center.* A student's or patient's immunization or health screening information, including name, date of birth, grade, and demographic information; vaccine(s) administered and the month, day and year of administration; and health screening results, clinic source, and location, all in a format specified by the department, shall be disclosed upon written or verbal request among the department, physicians, physician assistants, nurses, certified medical assistants, screening providers, elementary schools, secondary schools, postsecondary schools, and licensed child care centers. Written or verbal permission from a student, patient, parent, or guardian is not required to release this information.

[**ARC 0481C**, IAB 12/12/12, effective 1/16/13; **ARC 1477C**, IAB 6/11/14, effective 7/16/14]

These rules are intended to implement Iowa Code sections 139A.8 and 22.7(2).

[Filed 11/10/77, Notice 10/5/77—published 11/30/77, effective 1/4/78]
[Filed emergency 12/23/77—published 1/11/78, effective 12/23/77]
[Filed emergency 9/18/78 after Notice 5/31/78—published 10/4/78, effective 9/18/78]
[Filed emergency 8/7/80 after Notice 6/11/80—published 9/3/80, effective 8/8/80]
[Filed emergency 1/15/81—published 2/4/81, effective 1/15/81]
[Filed 9/23/83, Notice 7/6/83—published 10/12/83, effective 11/16/83]
[Filed emergency 7/10/87—published 7/29/87, effective 7/10/87]
[Filed 1/11/89, Notice 10/19/88—published 2/8/89, effective 3/17/89]
[Filed 5/10/91, Notice 4/3/91—published 5/29/91, effective 7/3/91]
[Filed 5/16/94, Notice 3/2/94—published 6/8/94, effective 7/13/94]
[Filed 5/13/96, Notice 3/27/96—published 6/5/96, effective 7/10/96]
[Filed 11/10/98, Notice 9/23/98—published 12/2/98, effective 1/6/99]
[Filed emergency 7/9/03—published 8/6/03, effective 7/9/03]
[Filed 9/12/03, Notice 8/6/03—published 10/1/03, effective 11/5/03]◊
[Filed 7/15/05, Notice 5/25/05—published 8/3/05, effective 9/7/05]
[Filed emergency 1/11/06—published 2/1/06, effective 1/11/06]
[Filed 11/12/08, Notice 7/16/08—published 12/3/08, effective 1/7/09]
[Filed Emergency ARC 8377B, IAB 12/16/09, effective 11/18/09]
[Filed ARC 8658B (Notice ARC 8399B, IAB 12/16/09; Amended Notice ARC 8491B, IAB 1/27/10), IAB 4/7/10, effective 5/12/10]

[Filed ARC 0481C (Notice ARC 0370C, IAB 10/3/12), IAB 12/12/12, effective 1/16/13]
[Filed Emergency ARC 0586C, IAB 2/6/13, effective 1/16/13]
[Filed ARC 1477C (Notice ARC 1229C, IAB 12/11/13), IAB 6/11/14, effective 7/16/14]

◊ Two or more ARCs

CHAPTER 8
IOWA CARE FOR YOURSELF (IA CFY) PROGRAM
[Prior to 4/4/12, see 641—Chapter 37]

641—8.1(135) Definitions. For purposes of this chapter, the following definitions apply:

"Abnormal screen" means a suspicion of breast or cervical cancer or laboratory values of total cholesterol or blood glucose and average blood pressure reading in the range defined by the CDC according to National Heart, Lung and Blood Institute guidelines.

1. A suspicion of breast cancer includes clinical breast examination findings of: palpable breast mass, breast dimpling, nipple retraction, bloody nipple discharge, palpable lymph nodes around clavicle or axilla, nipple erythema and scaliness, a mammography result of breast imaging reporting and data systems (BI-RADS) category 4 (suspicious abnormality suggesting need for biopsy) or category 5 (highly suggestive of malignancy) (ICD-9 793.8), breast biopsy result of ductal cancer in situ, lobular cancer in situ (ICD-9 233.0), or breast or lymph node (or other) biopsy result of breast cancer.

2. Suspicion of cervical cancer is a Pap test result of atypical squamous cells cannot exclude high-grade squamous intraepithelial lesions (ASC-H) (ICD-9 795.02), atypical glandular cells (AGC) (ICD-9 795.00), low-grade squamous intraepithelial lesions (LSIL) (ICD-9 622.11 or 795.03), or high-grade squamous intraepithelial lesions (HSIL) (ICD-9 622.12 or 795.04), leukoplakia of the cervix (ICD-9 622.2), or cervical biopsy result of cervical intraepithelial neoplasia II or III (ICD-9 622.10, 622.11, 622.12, 795.03, or 795.04), or cancer in situ (ICD-9 233.1).

3. Abnormal value means laboratory values of total cholesterol or blood glucose (HbA1c if diagnosed diabetic) and average blood pressure reading in the range defined by the CDC according to National Heart, Lung and Blood Institute guidelines.

"ACR" or *"American College of Radiology"* means one of the Food and Drug Administration-recognized accreditation bodies for minimum quality standards for personnel, equipment, and record keeping in facilities that provide mammography.

"Advanced registered nurse practitioner" means an individual licensed to practice under 655—Chapter 7.

"Alert value" means laboratory values of total cholesterol or blood glucose and average blood pressure reading in the range defined by the CDC according to National Heart, Lung and Blood Institute guidelines.

"BCCPTA" or *"Breast and Cervical Cancer Prevention and Treatment Act of 2000"* means a federal law that provides each state with the option of extending Medicaid eligibility to women who were diagnosed with breast or cervical cancer through the National Breast and Cervical Cancer Early Detection Program.

"BCCT option of Medicaid" or *"breast and cervical cancer treatment option of Medicaid"* means the optional program of medical aid designed for women who are unable to afford regular medical service and are diagnosed with breast or cervical cancer through the National Breast and Cervical Cancer Early Detection Program or through funds from Susan G. Komen for the Cure. The BCCT option of Medicaid is financed by federal and state payment sources and is authorized by Title XIX of the Social Security Act.

"Benign" means a noncancerous condition that does not spread to other parts of the body.

"Biopsy" means the removal of a sample or an entire abnormality for microscopic examination to diagnose a problem. Examples of a sampling would be a core biopsy or incisional biopsy; an example of entire removal would be an excisional biopsy.

"BI-RADS" or *"breast imaging reporting and data systems"* means a standardized reporting system for mammography reports.

"Blood pressure" means the pressure or tension of the blood within the systemic arteries, maintained by the contraction of the left ventricle, the resistance of the arterioles and capillaries, the elasticity of the arterial walls, as well as the viscosity and volume of the blood; expressed as relative to the ambient atmospheric pressure.

"BMI" or *"body-mass index"* means a number calculated from a person's weight and height. BMI provides a reliable indicator of body fatness for most people and is used to screen for weight categories that may lead to health problems.

"Breast ultrasound" means the use of high-energy sound waves that are bounced off internal tissues and make echoes to produce a pictorial representation of the internal structure of the breast.

"Cancer" means a malignant tumor of potentially unlimited growth of new cells that expand locally by invasion and systemically by metastasis.

"Carcinoma in situ" means cell changes in which malignant cells are localized and may press against adjoining tissue but have not penetrated or spread beyond their site of origin.

"Cardiologist" means a physician who specializes in the study of the heart and its action and diseases.

"Case management" means the IA CFY program component that involves establishing, brokering, and sustaining a system of available clinical and essential support services for all women enrolled in the program.

"CBE" or *"clinical breast examination"* means complete examination of a woman's breast and axilla with palpation by a health care provider, including examination of the breast in both the upright and supine positions.

"CDC" means the Centers for Disease Control and Prevention of the U.S. Department of Health and Human Services.

"Cholesterol" means a waxy, fat-like substance made in the liver and other cells and found in certain foods, such as foods from animals, for example, dairy products, eggs and meat. Types of cholesterol are as follows:

1. Low density lipoprotein or LDL, also called "bad" cholesterol. LDL can cause buildup of plaque on the walls of arteries. The more LDL there is in the blood, the greater the risk of heart disease.
2. High density lipoprotein or HDL, also called "good" cholesterol. HDL helps the body get rid of bad cholesterol in the blood. If levels of HDL are low, risk of heart disease increases.
3. Very low density lipoprotein or VLDL. VLDL is similar to LDL cholesterol in that it contains mostly fat and not much protein.

"CLIA" or *"Clinical Laboratory Improvement Act of 1988"* means the law which established minimum quality standards for personnel and quality assurance methods that monitor patient test management and assess quality control, proficiency testing, and personnel handling of laboratory and pathology specimens.

"CLIA-waived tests" means simple laboratory examinations and procedures that are cleared by the federal government for home use; that employ methodologies that are so simple and accurate that erroneous results would be negligible; or that pose no reasonable risk of harm to the patient if the test is performed incorrectly.

"Colposcopy" means a procedure that allows close examination of the surface of the cervix with a high-powered microscope.

"Community referral" means the act, action or instance of directing a participant to a community resource.

"Community resource" means a source of information, service or expertise that is available within the community.

"Cooperative agreement" means a signed contract between the department and another party, for example, a health care provider. This contract allows the department to pay the health care provider for providing services to IA CFY program participants.

"Creditable coverage" means any insurance that pays for medical bills incurred for the screening, diagnosis, or treatment of breast and cervical cancer. Creditable coverage as described by the Health Insurance Portability and Accountability Act of 1996 includes, but is not limited to, group health plans or health insurance coverage consisting of medical care under any hospital or medical service policy, health maintenance organization, Medicare Part A or B, Medicaid, armed forces insurance, or state health risk pool. A woman who has creditable coverage shall not be eligible for coverage under the breast and cervical cancer treatment option of Medicaid.

"Creditable coverage circumstances" means those instances in which a woman has creditable coverage but is not actually covered for treatment of breast or cervical cancer.

1. When there is a preexisting-condition exclusion or when the annual or lifetime limit on benefits has been exhausted, a woman is not considered to have creditable coverage for this treatment.
2. If the woman has limited coverage, such as a high deductible, limited drug coverage, or a limited number of outpatient visits, she is still considered to have creditable coverage and is not eligible for coverage under the breast and cervical cancer treatment option of Medicaid.
3. If the woman has a policy with a limited scope of coverage, such as only dental, vision, or long-term care, or has a policy that covers only a specific disease or illness, she is not considered to have creditable coverage unless the policy provides coverage for breast and cervical cancer treatment.
4. For the purposes of this program, eligibility for Indian Health Services or tribal health care is not considered creditable coverage (according to P.L. 107-121, the Native American Breast and Cervical Cancer Treatment Technical Amendment Act of 2001).

"Cytology" means the scientific study of cells.

"Cytopathology" means the scientific study of cells in disease.

"Cytotechnologist" means a medical technician trained in the identification of cells and cellular abnormalities.

"Department" means the Iowa department of public health.

"Diagnostic mammography" means a radiological examination performed for appropriate clinical indications, such as breast mass(es), other breast signs or symptoms (spontaneous nipple discharge, skin changes), or special cases, such as a history of breast cancer with breast conservation or augmented breasts.

"FDA" or *"Food and Drug Administration"* means the federal governmental body which certifies that a mammography facility meets minimum quality standards for personnel, equipment, and record keeping.

"Follow-up" means the IA CFY program component that involves a system for seeking information about or reviewing an abnormal condition, rescreening, or recall for annual visits.

"Glucose" means a simple sugar that is an important carbohydrate in biology. Cells use glucose as a source of energy and a metabolic intermediate.

"Gynecologist" means a physician who specializes in diseases of the reproductive organs in women.

"HbA1c" or *"glycosylated hemoglobin"* means a clinical laboratory test for the purposes of monitoring blood glucose control of a participant diagnosed with diabetes.

"Health care provider" means any physician, advanced registered nurse practitioner, or physician assistant who is licensed by the state of Iowa and provides care to IA CFY program-enrolled women.

"Heart disease" means a broad term used to describe a range of diseases that affect the heart and, in some cases, blood vessels. The term is often used interchangeably with "cardiovascular disease," which generally refers to conditions that involve narrowed or blocked blood vessels that can lead to a heart attack, chest pain (angina) or stroke.

"Heart disease risk factors" means identifiable factors that make some people more susceptible than others to heart disease. Heart disease risk factors include:

1. Being overweight.
2. Lack of physical activity.
3. High blood pressure.
4. High blood cholesterol.
5. Diabetes.
6. Cigarette smoking.

Risk factors that cannot be changed are age and family history. The more heart disease risk factors a person has increases the person's chance of developing heart disease.

"IA BCCEDP" or *"Iowa breast and cervical cancer early detection program"* means a comprehensive breast and cervical cancer screening program established and funded under Title XV of the federal Public Health Service Act and administered by the Iowa department of public health,

with the delegated responsibility of implementation and evaluation from the CDC, Division of Cancer Prevention and Control.

"IA CFY program" or *"Iowa care for yourself program"* means an integrated comprehensive breast and cervical cancer screening program and cardiovascular risk factor screening and intervention program administered by the Iowa department of public health.

"IA WISEWOMAN" or *"Iowa well-integrated screening and evaluation for women across the nation"* means a cardiovascular-related risk factor screening and intervention program to provide standard preventive screening services, including blood pressure measurements, cholesterol testing, and lifestyle interventions that target poor nutrition, physical inactivity, and tobacco use. The program is authorized by the federal government and administered by the CDC to help reduce deaths and disability from heart disease and stroke.

"ICD-9" or *"International Classification of Disease, 9th edition"* means a standardized classification of diseases, injuries, and reasons of death, by cause and anatomic localization, which is systematically put into a number of up to six digits and which allows clinicians, statisticians, politicians, health planners and others to speak a common language, both in the United States and internationally.

"Infrastructure" means the basic framework of sufficient staff and adequate support systems to plan, implement, and evaluate the components of the IA CFY program.

"In need of treatment" means that a medical or surgical intervention is required because of an abnormal finding of breast or cervical cancer or precancer that was determined as a result of a screening or diagnostic procedure for breast or cervical cancer/precancer under the NBCCEDP.

"Intervention" means services that promote a heart-healthy diet and physical activity and that are based on screening results, which include blood pressure, cholesterol, glucose, weight, height, personal medical history, family medical history, and health behavior and readiness-to-change assessments.

"MATF" or *"medical advisory task force"* means an advisory board that may be utilized by the IA CFY program to offer knowledge and experience as related to the fields of expertise of the members of the task force. Duties of the MATF may include, but are not limited to, the following:

1. Reviewing and making recommendations for clinical service expansion.
2. Reviewing program-developed clinical protocols.
3. Providing recommendations related to other clinical and participant-related issues.
4. Providing input related to quality assurance issues.
5. Reviewing program screening and diagnostic data.

"MDEs" or *"minimum data elements"* means a set of standardized data elements used to collect demographic and clinical information on women whose screening or diagnosis was paid for with IA CFY program funds. MDEs were developed by the CDC, Division of Cancer Prevention and Control, to ensure that consistent and complete information is collected on women whose screening or diagnosis was paid for with IA CFY program funding.

"Medicaid" means the program of medical aid designed for those unable to afford regular medical service, financed by federal and state payment sources, and authorized by Title XIX of the Social Security Act.

"Medicare" means the program of federal payment source for health benefits, especially for the aged, which is authorized by Title XVIII of the Social Security Act.

"NBCCEDP" or *"National Breast and Cervical Cancer Early Detection Program"* means a program established with the passage of the Breast and Cervical Cancer Mortality Prevention Act of 1990 (Public Law 101-354). The law authorizes the CDC to establish a program of grants to states, tribes, and territories for the purpose of increasing the early detection of breast and cervical cancer, particularly among low-income, uninsured, and underserved women.

"Oncologist" means a physician who is a specialist in treating or studying the physical, chemical, and biologic properties and features of neoplasms, including causation, pathogenesis, and treatment.

"Outreach" means the IA CFY program component that involves recruiting targeted populations or women who never or rarely utilize preventive health services.

"Pap test" means the Papanicolaou screening test that collects cells from the cervix for examination under a microscope. The Pap test can detect abnormal cells or precancerous cells before cancer develops.

"Pathologist" means a physician who is a specialist in identifying diseases by studying cells and tissues under a microscope.

"Physician" means an individual licensed to practice under Iowa Code chapter 148.

"Physician assistant" means an individual licensed to practice under Iowa Code chapter 148C.

"Precancerous" means a condition that may become, or is likely to become, cancer.

"Program and fiscal management" means the IA CFY program component that includes planning, organizing, directing, coordinating, managing, budgeting for, and evaluating program activities.

"Quitline Iowa" means a toll-free, statewide smoking cessation telephone counseling hotline through which trained counselors provide caller assistance in making an individualized tobacco use quit plan and provide ongoing support through optional follow-up calls.

"Radiologist" means a physician who specializes in creating and interpreting pictures of areas inside the body. The pictures are produced with X-rays, sound waves, or other types of energy.

"Rarely or never been screened" means, as defined for the NBCCEDP, that a woman has not had cervical cancer screening within the last five years or has never been screened for cervical cancer.

"Recruitment" means the IA CFY program component that involves enrolling targeted populations or women for preventive health services.

"Referral" means the IA CFY program component that involves directing women with abnormal screening results to appropriate resources for follow-up action.

"Screening mammography" means the use of X-ray of the breasts of asymptomatic women in an attempt to detect abnormal lesions of the breast when they are small, nonpalpable, and confined to the breast.

"Service delivery" means providing, either directly or through contractual arrangements, comprehensive breast and cervical cancer screening and heart disease and stroke risk factor screening, diagnosis, and treatment services through tracking of screening intervals, timeliness of diagnosis, and timeliness of treatment of women.

"Surgeon" means a physician who treats disease, injury, or deformity by physical operation or manipulation.

"Surveillance" means the IA CFY program component that involves the systematic collection, analysis, and interpretation of health data.

"Susan G. Komen for the Cure" means an international organization with a network of volunteers working through local affiliates and Komen Race for the Cure® events to eradicate breast cancer as a life-threatening disease by advancing research, education, screening, and treatment.

"TBS" or *"the Bethesda system"* means a system that was developed to provide uniform diagnostic terminology for reporting cervical or vaginal cytologic findings to facilitate communication between the laboratory and the clinician.

"Triglycerides" means a type of fat that is carried in the blood by very low density lipoproteins. Excess calories, alcohol, or sugar in the body are converted into triglycerides and stored in fat cells throughout the body.

"WISEWOMAN" or *"Well-Integrated Screening and Evaluation for Women Across the Nation"* means a national program that offers blood pressure, diabetes, and cholesterol risk factor screening, lifestyle intervention, and referral services in an effort to prevent cardiovascular disease.

[**ARC 0059C**, IAB 4/4/12, effective 5/9/12]

641—8.2(135) Components of the Iowa care for yourself (IA CFY) program. The IA CFY program shall include the following key components:

8.2(1) Program and fiscal management shall be conducted by ensuring strategic planning, implementation, coordination, integration, and evaluation of all programmatic activities and administrative systems, as well as the development of key communication channels and oversight mechanisms to aid in these processes. Program management shall ensure that infrastructure adequately supports service delivery.

8.2(2) Service delivery of specific and appropriate clinical procedures to detect breast and cervical abnormalities and heart disease or stroke risk factors for women enrolled in the IA CFY program shall be directly provided or provided through contractual arrangements.

a. The IA CFY program shall cover breast and cervical cancer screening and diagnostic services including, but not limited to, the following when those services are provided by a participating health care provider who has a cooperative agreement with the IA CFY program. Payment shall be based on Medicare Part B participating-provider rates as released annually at the beginning of each calendar year.

(1) Physical examinations that include two recorded blood pressures in addition to one or more of the following screening services: CBE, pelvic examination, or Pap test;

(2) Height and weight measurements, when provided in conjunction with one or more of the screening services listed in subparagraph 8.2(2)*"a"*(1) above;

(3) Mammography (screening and diagnostic);

(4) Breast ultrasound, when used as an adjunct to mammography;

(5) Fine-needle aspiration of breast cysts;

(6) Breast biopsies, excisional and nonexcisional (physician charges only; hospital charges are not covered);

(7) Colposcopy of the cervix, with or without biopsy;

(8) Surgical consultations for diagnosis of breast and cervical cancer;

(9) Pathology charges for breast and cervical biopsies;

(10) Anesthesia for breast biopsies (health care provider charges only; hospital charges and supplies are not covered).

b. Breast and cervical cancer-related services not covered by the IA CFY program include, but are not limited to, the following:

(1) Services not related to breast or cervical cancer screening or diagnosis;

(2) Treatment procedures and services;

(3) Services provided by nonparticipating providers;

(4) Hospital charges for breast biopsies and anesthesia;

(5) Inpatient services.

c. The IA CFY program shall cover cardiovascular disease-related services for those participants enrolled in the IA CFY program for whom at least one screening service was paid for using federal funds. Cardiovascular disease-related services shall include, but not be limited to, the following when those services are provided by a participating health care provider who has a cooperative agreement with the IA CFY program. Payment shall be based on Medicare Part B participating-provider rates as released annually at the beginning of each calendar year.

(1) Physical examinations that include two recorded blood pressures;

(2) Height and weight measurements;

(3) Fasting lipid panel that includes total cholesterol, HDL cholesterol, LDL cholesterol, triglycerides; and

(4) Diabetes screening:

1. For a nondiagnosed diabetic, fasting blood glucose; and

2. For a diagnosed diabetic, glycosylated hemoglobin (HbA1c).

d. Cardiovascular disease-related services not covered by the IA CFY program include, but are not limited to, the following:

(1) A follow-up diagnostic visit to a health care provider if one or more screening values are in the CDC-defined abnormal value range;

(2) Repeat laboratory testing;

(3) Any additional testing;

(4) Medication; and

(5) Treatment.

e. IA CFY program intervention shall be conducted as a component of the program for all women eligible and enrolled to receive IA CFY program services.

f. A health care provider who has a cooperative agreement with the IA CFY program shall be subject to the following:

(1) The health care provider agrees that reimbursement of procedures and services provided shall not exceed the amount that would be paid under Medicare Part B participating-provider rates as released annually at the beginning of each calendar year.

(2) A mammography health care provider shall ensure that the provider's facility has current FDA certification and ACR or state of Iowa accreditation and is a Medicare and Medicaid-approved facility utilizing BI-RADS and following ACR guidelines for mammography report content.

(3) A board-certified radiologist must be immediately available to determine selection of views and readings when a diagnostic mammogram is performed.

(4) The health care provider shall submit obtained cytology and pathology specimens to a CLIA-certified laboratory for processing. The laboratory shall provide cytological reading and analysis of cervical and vaginal Pap tests by certified/registered cytotechnologists. Cytology (Pap) tests shall be reported using current TBS terminology. The laboratory shall provide board-certified pathologists or experienced certified cytotechnologists to rescreen all analyses and readings of cervical and breast biopsies.

(5) The health care provider shall practice according to the current standards of medical care for breast and cervical cancer early detection, diagnosis, and treatment.

(6) Service delivery may be provided in a variety of settings. Service delivery must, however, include:

1. Providing screening services for specific geographic areas;
2. Providing a point of contact for scheduling appointments;
3. Providing age and income eligibility screening;
4. Providing breast and cervical cancer screening and heart disease and stroke screening to eligible women;
5. Providing referral and follow-up for women who have alert-value screening results;
6. Providing the required reporting system for screening and follow-up activities;
7. Providing population-based education, outreach, and recruitment activities;
8. Providing IA CFY program cardiovascular intervention as a component of the program for all women eligible for and enrolled to receive IA CFY program services; and
9. Submitting data within 60 days of service date to establish screening documentation.

(7) The health care provider shall ensure compliance with this chapter and other terms and conditions included in the cooperative agreement.

8.2(3) Referral, tracking, and follow-up utilizing a data system to monitor each enrolled woman's receipt of screening/rescreening, diagnostic, and treatment procedures shall be conducted by the IA CFY program and contracted county board of health designated agency staff.

a. The enrolled woman shall be notified by contracted county board of health designated agency staff of the results of the service, whether the results are normal, benign, or abnormal.

b. The data system shall provide tracking of appropriate and timely clinical services following an abnormal test result or diagnosis of cancer.

c. If the enrolled woman has an abnormal Pap test or breast screening or an alert-value heart disease risk factor, the health care provider shall provide to the woman a comprehensive referral directing her to appropriate additional diagnostic or treatment services.

d. The comprehensive referral shall be written. Follow-up shall be conducted to determine whether services were timely, completed, or met.

8.2(4) The IA CFY program and contracted county board of health designated agency staff shall provide case management and shall assist participants whose cancer was diagnosed through the program in obtaining needed treatment services.

8.2(5) IA CFY program staff shall use quality assurance and improvement techniques including use of established standards, systems, policies and procedures to monitor, assess and identify practical methods for improvement of the program and its components.

a. Quality assurance tools shall include utilizing FDA and ACR minimum standards for mammography facilities and CLIA minimum standards for cytopathology and pathology laboratories.

b. Quality assurance measures shall contribute to the identification of corrective actions to be taken to remedy problems found as a result of investigating quality of care.

8.2(6) Professional development shall be provided by the IA CFY program and contracted county board of health designated agency staff through a variety of channels and activities that enable professionals to perform their jobs competently, identify needs and resources, and contribute to ensuring that health care delivery systems provide positive clinical outcomes.

8.2(7) Using a variety of methods and strategies to reach priority populations, the IA CFY program and contracted county board of health designated agency staff shall provide population-based public education and recruitment that involve the systematic design and delivery of clear and consistent messages about breast and cervical cancer and the benefits of early detection. Outreach activities should focus on women who have never or rarely been screened and should work toward the removal of barriers to care (i.e., the need for child care, respite care, interpreter services and transportation) through collaborative activities with other community organizations.

8.2(8) The IA CFY program may develop coalitions and partnerships to bring together groups and individuals that establish a reciprocal agreement for sharing resources and responsibilities to achieve the common goal of reducing breast and cervical cancer mortality and heart disease and stroke mortality.

8.2(9) The IA CFY program shall conduct surveillance utilizing continuous, proactive, timely and systematic collection, analysis, interpretation and dissemination of breast and cervical cancer screening and heart disease and stroke risk factor behaviors and incidence, prevalence, survival, and mortality rates. Epidemiological studies shall be conducted utilizing MDEs and other data sources to establish trends of disease, diagnosis, treatment, and research needs. Program planning, implementation, and evaluation shall be based on the epidemiological evidence.

8.2(10) Evaluation of the program shall be conducted through systematic documentation of the operations and outcomes of the program, compared to a set of explicit or implicit standards or objectives.
[**ARC 0059C**, IAB 4/4/12, effective 5/9/12]

641—8.3(135) Participant eligibility criteria. An applicant for the IA CFY program must satisfy the criteria outlined in this rule. If an applicant does not meet these criteria, the applicant shall be provided information by contracted county board of health designated agency staff regarding IowaCare, free care, or sliding-fee clinics available in the area in which the applicant lives.

8.3(1) *Age.* An applicant for the IA CFY program must satisfy only one of these criteria.

a. Women 50 through 64 years of age, the program's priority population, shall receive annual breast and cervical (if appropriate) cancer screening.

b. Women 40 through 64 years of age shall receive cardiovascular risk factor screening in addition to breast and cervical cancer screening services.

c. Women 40 through 49 years of age shall receive annual breast and cervical (if appropriate) cancer screening.

d. Women under 40 years of age, if symptomatic for breast cancer, shall receive breast and cervical cancer screening services based upon funding availability.

e. Women 65 years of age and older shall be eligible to receive annual breast and cervical (if appropriate) cancer screening if they do not have Medicare Part B coverage.

8.3(2) *Income.*

a. IA CFY program income guidelines are based upon 250 percent of the federal poverty level, which is set annually by CMS. New IA CFY program income guidelines will be adjusted following any change in CMS guidelines.

b. Self-declaration of income may be accepted.

c. Eligibility shall be based on net income for the household.

d. Assets shall not affect income status and shall not be counted when eligibility under the IA CFY program is determined.

8.3(3) *Insurance.*

a. The IA CFY program shall determine a woman to be uninsured if the woman does not have health insurance coverage.

b. The IA CFY program shall determine a woman to be underinsured if the woman has health insurance with unreasonably high copayments, deductibles, or coinsurance or the insurance does not cover IA CFY program-covered services.

c. Women who have Medicaid or Medicare Part B are not eligible. EXCEPTIONS: IowaCare, Medicaid with spenddown, Iowa family planning network.

8.3(4) *Residency.*

a. A woman must be a resident of Iowa or of a state that shall enroll a woman in the BCCT option of Medicaid if the woman is screened or diagnosed by the IA CFY program.

b. A woman who is a resident of a state that does not accept women into the BCCT option of Medicaid and who chooses to continue to receive services in the IA CFY program must be informed that she may not be able to have her treatment paid for by the BCCT option of Medicaid if she does not receive services in her state of residence.

c. Proof and length of residency in Iowa are not required.

8.3(5) *Ineligible.* The IA CFY program does not provide coverage for:

a. Men.

b. Women with Medicare Part B coverage.

c. Women 39 years of age and younger unless they have symptoms of breast cancer.

[**ARC 0059C**, IAB 4/4/12, effective 5/9/12]

641—8.4(135) Participant application procedures for IA CFY program services.

8.4(1) *Enrollment.* After a woman is determined eligible for services:

a. The woman must complete, sign, and return a consent and release form to the IA CFY program. The date on the signed form shall be the participant's enrollment date.

b. Upon enrollment, the participant must select an IA CFY program health care provider and is eligible for services for 12 months from the enrollment date, subject to restrictions in program coverage as provided in rule 641—8.5(135).

c. If a participant is unable to access a particular health care provider due to unavailability of appointments or if a participant requests to change to another health care provider, designated agency staff shall assist the participant in choosing another IA CFY program health care provider who is available in the participant's area.

8.4(2) *Reenrollment.*

a. A participant's continued eligibility for program coverage shall be determined annually.

b. No more than 45 days prior to the end of the 12-month coverage period, the IA CFY program shall contact the participant to see if she wishes to reenroll in the program.

c. If a participant wishes to reenroll, she must complete, sign and return a consent and release form before receiving any further services.

8.4(3) *Termination of enrollment.* The IA CFY program shall terminate a participant's enrollment if the participant:

a. Requests termination from the program;

b. No longer meets the criteria set forth in rule 641—8.3(135);

c. Does not return a signed IA CFY program consent and release form; or

d. Refuses to receive screening and diagnostic services through an IA CFY program health care provider.

[**ARC 0059C**, IAB 4/4/12, effective 5/9/12]

641—8.5(135) Priority for program expenditures.

8.5(1) In the event the IA CFY program director determines that there are inadequate funds to meet participants' needs, either attributable to a reduction in federal funding from the CDC or to a projected enrollment of women in excess of anticipated enrollment, the program director may restrict new applicants' participation in the IA CFY program as follows:

a. First priority shall be given to women 50 through 64 years of age.

b. Second priority shall be given to women 40 through 49 years of age who are symptomatic.

c. Third priority shall be given to women 40 through 49 years of age who are asymptomatic.

d. Fourth priority shall be given to women 65 years of age and older who do not have Medicare Part B coverage.

8.5(2) In the event that the financial demand abates, the program director shall withdraw the financial shortfall determination, at which time women shall be eligible for program services in accordance with rule 641—8.3(135).

[**ARC 0059C**, IAB 4/4/12, effective 5/9/12]

641—8.6(135) Right to appeal. If an individual disagrees with or is dissatisfied with program eligibility, the covered-service determination, or the decision of the program, the individual has the right to appeal the decision or action.

8.6(1) The appeal shall be in writing and shall be submitted, within ten working days of the decision or action, to the designated agency personnel with whom the individual has been working.

8.6(2) The designated agency staff shall contact a state IA CFY program staff person and shall provide the information regarding the appeal to the staff person.

8.6(3) State IA CFY program staff shall confer with the bureau chief supervising the IA CFY program and provide a decision to the designated agency staff within five business days. A decision made by state IA CFY program staff shall be delivered by telephone, if possible, to the individual making the appeal and shall be followed by a written notification of the decision. The decision of state IA CFY program staff shall be considered a final agency decision in accordance with Iowa Code chapter 17A.

[**ARC 0059C**, IAB 4/4/12, effective 5/9/12]

641—8.7(135) Verification for the breast or cervical cancer treatment (BCCT) option of Medicaid. The Iowa department of public health and the department of human services have coordinated to develop procedures for women to access Medicaid coverage for treatment of breast or cervical cancer.

8.7(1) Before referring a woman to her county of residence's local office of the department of human services, a contracted county board of health designated agency staff member shall document the following regarding the woman:

a. The woman is currently enrolled in the IA CFY program. To be considered enrolled in the program, the woman must meet program age guidelines, have at least one of the basic screening services (Pap test, screening mammogram, or CBE) or diagnostic procedures paid for by the IA CFY program or with Susan G. Komen for the Cure funds, and be in need of treatment for breast or cervical cancer or precancerous conditions; or

b. The woman was enrolled in NBCCEDP and has moved to Iowa. To be considered enrolled in NBCCEDP, the woman must meet the Iowa program age guidelines, have at least one of the basic screening services (Pap test, screening mammogram, or CBE) or a diagnostic procedure paid for by the NBCCEDP or with Susan G. Komen for the Cure funds, and be in need of treatment for breast or cervical cancer or precancerous conditions; and

c. The woman has creditable coverage circumstances or has no creditable coverage for breast or cervical cancer treatment.

8.7(2) The BCCT option of Medicaid is administered by the Iowa department of human services under 441 Iowa Administrative Code Chapter 75, "Conditions of Eligibility."

[**ARC 0059C**, IAB 4/4/12, effective 5/9/12]

These rules are intended to implement Iowa Code sections 135.11(1) and 135.39 and 42 U.S.C. Section 300k, as amended.

[Filed ARC 7670B (Notice ARC 7538B, IAB 1/28/09), IAB 4/8/09, effective 5/13/09]

[Filed ARC 0059C (Notice ARC 9995B, IAB 2/8/12), IAB 4/4/12, effective 5/9/12]

CHAPTER 9
OUTPATIENT DIABETES EDUCATION PROGRAMS
[Prior to 7/29/87, Health Department[470], Ch 9]

641—9.1(135) Scope. The scope of this chapter is to describe the standards for outpatient diabetes self-management education programs and the procedures programs must follow for certification by the Iowa department of public health that will allow for third-party reimbursement.

641—9.2(135) Definitions. For the purpose of these rules, the following terms shall have the meaning set forth below.

"AADE" means the American Association of Diabetes Educators.

"Accredited" means that a program is currently accredited by the American Association of Diabetes Educators.

"ADA" means the American Diabetes Association.

"Certification" means the review and approval and assignment of a program site number of an outpatient diabetes education program which meets minimum standards.

"Certified diabetes educator" means a person currently certified by the National Certification Board for Diabetes Educators.

"Department" means the Iowa department of public health.

"Diabetes mellitus" includes the following:

1. "Type I diabetes" means insulin-dependent diabetes (IDDM) requiring lifelong treatment with insulin.
2. "Type II diabetes" means noninsulin-dependent diabetes often managed by food plan, exercise, weight control, and in some instances, oral medications or insulin.
3. "Gestational diabetes" means diabetes diagnosed during pregnancy.
4. "Impaired glucose tolerance" means a condition in which blood glucose levels are higher than normal, diagnosed by a physician, and treated with food plan, exercise or weight control.
5. "Secondary diabetes" means diabetes induced by drugs or chemicals as well as by pancreatic or endocrine disease and treated appropriately.

"Director" means the director of the Iowa department of public health.

"Licensed dietitian" means a person currently licensed to practice dietetics under Iowa Code chapter 152A.

"Participant" means a patient who is referred to, is active in, or has completed the educational diabetes program.

"Pharmacist" means a person currently licensed to practice pharmacy under Iowa Code chapter 155.

"Physician" means a person currently licensed to practice medicine and surgery, osteopathic medicine and surgery, or osteopathy under Iowa Code chapters 148 and 150A.

"Primary instructor" means an instructor with major or broad teaching responsibility.

"Professional health educator" means a person having successfully completed a degree designated "health education" from an accredited college or university.

"Program" means an outpatient diabetes self-management education program in which instruction shall be provided which shall enable people with diabetes and their families to understand the diabetes disease process and the daily management of diabetes.

"Program coordinator" means the person responsible for the direction and supervision of a program including, but not limited to, planning, arranging implementation, and assuring quality.

"Program staff" means the program coordinator, program physician, primary and supporting instructors, and advisory committee members.

"Recognized" means that a program is currently recognized by the American Diabetes Association.

"Registered nurse" means a person currently licensed to practice professional nursing under Iowa Code chapter 152.

"Standards" means the outpatient diabetes education program standards developed by the department.

"Supporting instructor" means an instructor who teaches only one or two specific topics of the program, on a voluntary or paid basis.
[**ARC 9249B**, IAB 12/1/10, effective 1/5/11]

641—9.3(135) Powers and duties. The department shall be responsible for taking the following actions:

9.3(1) Develop minimum standards in coordination with the American Diabetes Association and the American Association of Diabetes Educators.

9.3(2) Annually review and update the standards as needed, and provide revised standards to programs and others.

9.3(3) Develop certification packages.

a. Certification packages shall be provided on request to programs and to the general public.

b. The package shall contain certification procedures, rules, and standardized forms.

c. The certification package is available from the Bureau of Chronic Disease Prevention and Management, Division of Health Promotion and Chronic Disease Prevention, Iowa Department of Public Health, Lucas State Office Building, 321 East 12th Street, Des Moines, Iowa 50319-0075.

9.3(4) Evaluate each application submitted and determine adequacy of program for certification.

9.3(5) Assign a program site number and an expiration date and issue a certificate to each program that meets the standards. A certificate shall be valid for three years from issuance unless specified otherwise on the certificate or unless sooner revoked.

9.3(6) Maintain a list of certified programs.
[**ARC 9249B**, IAB 12/1/10, effective 1/5/11]

641—9.4(135) Application procedures for American Diabetes Association-recognized and American Association of Diabetes Educators-accredited programs. When a program is recognized by the American Diabetes Association or accredited by the American Association of Diabetes Educators, the program shall apply for certification to the department by submitting a copy of the Certificate of Recognition provided by ADA or the Certificate of Accreditation provided by AADE, the name, address and telephone number for the program, the name of the program coordinator and the name of the program physician. In addition, since the ADA recognition and the AADE accreditation programs do not require the participation of a pharmacist but the Iowa law does, ADA-recognized and AADE-accredited programs shall submit the name(s), license number(s) and continuing education hours of the pharmacist(s) who serves as program staff. A pharmacist shall be a primary or supporting instructor or advisory committee member and shall meet the education requirements in 9.8(6), 9.8(7) or 9.8(8).
[**ARC 9249B**, IAB 12/1/10, effective 1/5/11]

641—9.5(135) Renewal procedures for American Diabetes Association-recognized and American Association of Diabetes Educators-accredited programs. Programs shall renew their certification every four years, at least 30 days prior to the expiration date. To apply for renewal of certification, the ADA-recognized program or the AADE-accredited program shall submit a copy of the new ADA Certificate of Recognition or AADE Certificate of Accreditation, the name, address and telephone number for the program, the name of the program coordinator, the name of the program physician, and the name(s), license number(s), and continuing education hours of the pharmacist(s) who serves as program staff. A pharmacist shall be a primary or supporting instructor or advisory committee member and shall meet the continuing education requirements in 9.9(7).
[**ARC 9249B**, IAB 12/1/10, effective 1/5/11]

641—9.6(135) Application procedures for programs not recognized by the American Diabetes Association or accredited by the American Association of Diabetes Educators.

9.6(1) Each program shall apply for certification with the department.

9.6(2) Applications from programs not recognized by ADA or accredited by AADE shall provide the following information:

a. Name, address and telephone number for the program, program physician and program coordinator.

b. Identification of the target population, an estimate of the program caseload, estimated number of programs to be conducted annually, minimum and maximum class size, and a calendar identifying the hours per day and number of days per week scheduled in individual or group instruction to meet the minimum course requirements.

c. A description of goals and objectives, participant referral mechanism, and means of coordinating between the community, physicians, and program staff.

d. Evaluation methods designed by individual programs and samples of documents to be used.

e. A description of the curriculum designed to instruct the participant with diabetes how to achieve self-management competency. The curriculum shall cover the same content areas as are required by the ADA for recognition or the AADE for accreditation including:

(1) Diabetes overview: includes content about the diabetes disease process, pathophysiology and treatment/management options.

(2) Stress and psychological adjustment: includes developing personal strategies to address psychological issues, healthy coping, and problem solving.

(3) Family involvement and social support: includes strategies for safety and risk reduction and creating healthy environments and social supports.

(4) Nutrition: includes incorporating nutritional management (healthy eating) into lifestyle.

(5) Exercise and activity: includes incorporating physical activity (being active) into lifestyle.

(6) Medications: includes using medications safely and for maximum therapeutic benefit.

(7) Monitoring and use of results: includes monitoring blood glucose and other health indicators or parameters and interpreting and using the results for self-management decision making.

(8) Reducing risks: includes prevention, detection, and treatment of acute complications and chronic complications as well as foot, skin and dental care.

(9) Behavior change strategies, goal setting, risk-factor reduction, and problem solving: includes personal goals and strategies to address risks and build positive habits.

(10) Preconception care, pregnancy, and gestational diabetes.

(11) Use of health care systems and community resources.

[**ARC 9249B**, IAB 12/1/10, effective 1/5/11]

641—9.7(135) Diabetes program management for programs not recognized by the American Diabetes Association or accredited by the American Association of Diabetes Educators.

9.7(1) Pertinent information related to the recent medical history, physical examination, and test results performed by the participant's health care provider shall be provided when the participant is referred to the program. Program staff shall remain in contact with the participant's health care provider and shall make recommendations relative to the medical care and treatment of the participant's diabetes when appropriate.

9.7(2) When the participant completes the program, arrangements shall be made by program staff for optimal follow-up care.

9.7(3) Program staff members shall take an active role in the care of the participant's diabetes during the course of the program to optimize diabetes control. The program staff shall be prepared to make necessary recommendations to the referring health care provider in the participant's diabetes management which may include the following:

a. Changes in the insulin regimen.

b. Changes in the medications.

c. Changes in the food plan.

d. Changes in exercise.

9.7(4) Written materials supporting the program curriculum are to be made available to the participants. Educational materials from commercial sources shall be carefully evaluated by staff and be consistent with the program curriculum.

[**ARC 9249B**, IAB 12/1/10, effective 1/5/11]

641—9.8(135) Program staff for programs not recognized by the American Diabetes Association or accredited by the American Association of Diabetes Educators.

9.8(1) A program coordinator and a program physician shall be designated.

a. The program coordinator shall provide direction and supervision of the program, including, but not limited to, planning, arranging implementation, and assuring quality. If the program coordinator is an instructor, the program coordinator shall be a health care professional and meet the requirements for primary or supporting instructor.

b. The program physician shall provide medical direction for the program. The program physician shall maintain contact with the participant's attending physician and shall make recommendations relative to the medical care and treatment of the participant's diabetes where appropriate.

9.8(2) The program shall have an advisory committee composed of at least one physician, one registered nurse, one licensed dietitian and one pharmacist to oversee the program. It is recommended the advisory committee include an individual with behavioral science expertise, a consumer, and a community representative. The advisory committee shall participate in the annual planning process, including determination of target audience, program objectives, participant access mechanisms, instructional methods, resource requirements, participant follow-up mechanisms, and program evaluation.

9.8(3) The primary instructors shall be one or more of the following health care professionals: physicians, registered nurses, licensed dietitians, and pharmacists who are knowledgeable about the disease process of diabetes and the treatment of diabetes. If there is only one primary instructor, there shall be at least one supporting instructor. The supporting instructor shall be from one of the four professions listed as possible primary instructors, but a different profession from the single primary instructor.

9.8(4) The program may have additional supporting instructors including, but not limited to, dentist, exercise physiologist, health educator, ophthalmologist, pediatric diabetologist, podiatrist, psychologist, psychiatrist, or social worker.

9.8(5) The names and license or registration numbers of the program physician, program coordinator, and all primary and supporting instructors shall be included with the program application.

9.8(6) All primary instructors shall show evidence of knowledge about the disease process of diabetes and the treatment and management of people with diabetes by documentation of one or more of the following:

a. Within the last three years, completion of a minimum of 24 hours of continuing education in diabetes, diabetes management, or diabetes education; or

b. Equivalent training or experience including, but not limited to, endocrinology fellowship training or masters level preparation in diabetes nursing/nutrition. Unsupervised teaching of patients is not an acceptable equivalent.

c. Current certification as a certified diabetes educator.

9.8(7) All supporting instructors shall show evidence of knowledge about the disease process of diabetes and the treatment and management of people with diabetes by documentation of completion of a minimum of 12 hours of continuing education in diabetes, diabetes management, or diabetes education within the last three years or have current certification as a certified diabetes educator.

9.8(8) The four professionals required in 9.8(2) to be on the advisory committee shall have completed six hours of continuing education in diabetes within the past three years.

9.8(9) The program coordinator shall determine that each primary or supporting instructor has current licensure or registration required to practice in Iowa.

9.8(10) The program coordinator shall determine that new primary or supporting instructors, who join the program staff during a certification period, meet the requirements for initial certification in 9.8(6) or 9.8(7) within six months of when they join the program staff.

[**ARC 9249B**, IAB 12/1/10, effective 1/5/11]

641—9.9(135) Renewal application procedures for programs not recognized by the American Diabetes Association or accredited by the American Association of Diabetes Educators. Every

four years, programs shall provide the following information to the department at least 30 days prior to the expiration date.

9.9(1) Name, address and telephone number of the program, program physician and program coordinator.

9.9(2) Identification of the target population, an estimate of program caseload, and the number of participants served in the certification period.

9.9(3) A description of goals and objectives, participant referral mechanism, and means of coordinating between the community, physicians, and program staff.

9.9(4) A description of the program evaluation process.

9.9(5) A description of any changes from the previous application.

9.9(6) A list of new program staff by name, license number or registration number, and position with the program. New staff who will serve as primary instructors shall submit documentation of their training in diabetes as addressed in 9.8(6). New staff serving as supporting instructors shall submit documentation of their training as addressed in 9.8(7).

9.9(7) Documentation of continuing education hours accrued since the previous application for current staff and new staff.

a. All primary instructors shall complete a minimum of 18 hours of continuing education in diabetes, diabetes management or diabetes education within the past three years.

b. All supporting instructors shall complete a minimum of nine hours of continuing education in diabetes, diabetes management, or diabetes education within the past three years.

c. The four professionals required in 9.8(2) to be on the advisory committee shall complete a minimum of five hours of continuing education in diabetes within the past three years.

[**ARC 9249B**, IAB 12/1/10, effective 1/5/11]

641—9.10(135) Annual report. Summary data shall be completed annually by each program and sent to the department. The data shall include but not be limited to the number of times the program was presented, the number of outpatients that participated, and a summarized description of program participants including type of diabetes, age, race and sex.

[**ARC 9249B**, IAB 12/1/10, effective 1/5/11]

641—9.11(135) Enforcement.

9.11(1) The department may annually or more frequently conduct on-site visits of certified programs.

9.11(2) The department shall furnish a written report of each visit to the program coordinator.

9.11(3) Programs determined by the department to no longer meet the minimum standards for certification shall be given 30 days following receipt of the department's notification of deficiencies to submit a plan of correction.

9.11(4) Notification of cancellation shall be provided to the Iowa insurance division of the Iowa department of commerce and the public.

641—9.12(135) Complaints.

9.12(1) The department shall accept complaints of alleged problems relating to certified outpatient diabetes self-management programs. The information shall state in a reasonably specific manner the basis of the complaints and be presented in writing, in person or by telephone to: Bureau of Chronic Disease Prevention and Management, Division of Health Promotion and Chronic Disease Prevention, Iowa Department of Public Health, Lucas State Office Building, 321 East 12th Street, Des Moines, Iowa 50319-0075; (515)281-5616.

9.12(2) The department shall, within 20 working days of the receipt of the complaint, contact the program coordinator for initial evaluation of the specific matters alleged in the complaint. The program shall receive a written report of the results of department activities relating to the complaint investigation. The complainant shall be promptly informed of the results of the investigation or any action taken by the department.

[**ARC 9249B**, IAB 12/1/10, effective 1/5/11]

641—9.13(135) Appeal process.

9.13(1) *Denial.* Programs shall receive written notice by certified mail, return receipt requested, setting forth the reason(s) for denial. The denial shall become effective 30 days after receipt by the aggrieved party unless the grievant within that 30-day period gives written notice to the department requesting a hearing in which case the notice shall be deemed to be suspended.

9.13(2) *Revocation.* Programs shall receive written notice by certified mail, return receipt requested, setting forth the reason(s) for revocation. The revocation shall become effective 30 days after receipt by the aggrieved party unless the grievant within that 30-day period gives written notice to the department requesting a hearing in which case the notice shall be deemed to be suspended.

9.13(3) *Contested case.* Upon receipt of an appeal that meets contested case status, the appeal shall be forwarded within five working days to the department of inspections and appeals pursuant to the rule adopted by that agency regarding the transmission of contested cases. The information upon which the adverse action is based and any additional information which may be provided by the aggrieved party shall also be provided to the department of inspections and appeals.

641—9.14(135) Formal contest.

9.14(1) *Hearing.* The hearing shall be conducted according to the procedural rules of the department of inspections and appeals found in 481—Chapter 10.

9.14(2) *Decision of administrative law judge.* When the administrative law judge makes a proposed decision and order, it shall be served by certified mail, return receipt requested, or delivered by personal service. That proposed decision and order then becomes the department's final agency action without further proceedings ten days after it is received by the aggrieved party unless an appeal to the director is taken as provided in 9.14(3).

9.14(3) *Appeal to director.* Any appeal to the director for review of the proposed decision and order of the administrative law judge shall be filed in writing and mailed to the director by certified mail, return receipt requested, or delivered by personal service within ten days after the receipt of the administrative law judge's proposed decision and order by the aggrieved party. A copy of the appeal shall also be mailed to the administrative law judge. Any request for an appeal shall state the reason for appeal.

9.14(4) *Record of hearing.* Upon receipt of an appeal request, the administrative law judge shall prepare the record of the hearing for submission to the director. The record shall include the following:

a. All pleadings, motions and rules.

b. All evidence received or considered and all other submissions by recording or transcript.

c. A statement of all matters officially noticed.

d. All questions and offers of proof, objections and rulings thereon.

e. All proposed findings and exceptions.

f. The proposed decision and order of the administrative law judge.

9.14(5) *Decision of director.* The decision and order of the director becomes the department's final agency action upon receipt by the aggrieved party and shall be delivered by certified mail, return receipt requested, or by personal service.

9.14(6) *Exhausting administrative remedies.* It is not necessary to file an application or a rehearing to exhaust administrative remedies when appealing to the director or the district court as provided in Iowa Code section 17A.19. The aggrieved party to the final agency action of the department who has exhausted all administrative remedies may petition for judicial review of that action pursuant to Iowa Code chapter 17A.

9.14(7) *Petition for judicial review.* Any petition for judicial review of a decision and order shall be filed in the district court within 30 days after the decision and order becomes final. A copy of the notice of appeal shall be sent to the director by certified mail, return receipt requested, or by personal service. The address is: Iowa Department of Public Health, Lucas State Office Building, 321 East 12th Street, Des Moines, Iowa 50319-0075.

[**ARC 9249B**, IAB 12/1/10, effective 1/5/11]

These rules are intended to implement Iowa Code section 135.11.

[Filed 5/17/85, Notice 11/7/84—published 6/5/85, effective 7/10/85[1]]

[Filed emergency 9/19/85—published 10/9/85, effective 9/19/85]
[Filed emergency 7/1/86—published 7/16/86, effective 7/1/86][2]
[Filed 7/11/86, Notice 5/7/86—published 7/30/86, effective 9/3/86]
[Filed emergency 9/19/86—published 10/8/86, effective 9/19/86]
[Filed emergency 7/10/87—published 7/29/87, effective 7/10/87]
[Filed 3/15/91, Notice 1/9/91—published 4/3/91, effective 5/8/91]
[Filed 9/19/96, Notice 7/17/96—published 10/9/96, effective 11/13/96]
[Filed ARC 9249B (Notice ARC 9092B, IAB 9/22/10), IAB 12/1/10, effective 1/5/11]

[1] Objection to 9.6(2) filed 7/11/85, IAB 7/31/85.
[2] See IAB, Inspections and Appeals Department.

CHAPTER 10
IOWA GET SCREENED: COLORECTAL CANCER PROGRAM

641—10.1(135) Purpose. The Iowa get screened (IGS): colorectal cancer program was established in 2009 through a cooperative agreement with the Centers for Disease Control and Prevention and is administered by the department. The goal of the IGS program is to reduce the incidence, mortality and prevalence of colorectal cancer in Iowa by increasing the number of men and women who receive colorectal cancer screenings. Through the program, fecal immunochemical tests (FITs) and colonoscopies will be provided to eligible Iowans. Along with providing screenings, the program also facilitates supportive services and referral for diagnosis and treatment to Iowans with abnormal screening results. Iowans who are eligible to enter the program must be 50 to 64 years of age, be underinsured or uninsured, have incomes of up to 250 percent of the federal poverty level (FPL) and have an average or increased risk for developing colorectal cancer.
[**ARC 0060C**, IAB 4/4/12, effective 5/9/12]

641—10.2(135) Definitions. For purposes of this chapter, the following definitions apply:

"Advanced registered nurse practitioner" means an individual licensed to practice under 655—Chapter 7.

"Case management" means establishing, brokering and sustaining a system of available clinical and essential support services for all individuals enrolled in the program.

"Colon" means large intestine or large bowel.

"Colonoscope" means a thin, flexible tube that takes pictures of the colon and rectum during a colonoscopy.

"Colonoscopist" means a licensed provider who administers a colonoscopy.

"Colonoscopy" means a visual examination of the inner surface of the colon by means of a colonoscope.

"Colorectal cancer," "colon cancer" or *"CRC"* means cancer that starts in the colon or the rectum.

"Colorectal cancer data elements" or *"CCDE"* means a set of standardized data elements developed by the Centers for Disease Control and Prevention, Division of Cancer Prevention and Control, to ensure that consistent and complete information is collected on participants whose screening or diagnosis was paid for through the IGS program with federal funding.

"Department" means the Iowa department of public health.

"Double-contrast barium enema" means an X-ray examination of the entire large intestine (colon) and rectum in which barium and air are introduced gradually into the colon by a rectal tube.

"Eligibility criteria" means a set of questions that a potential participant is asked to ensure the participant meets program qualifying standards including targeted age, income guidelines, level of risk for colorectal cancer and screening determination guidelines. Qualifying standards are outlined in the CDC's Colorectal Control Cancer Program Policies and Procedures and are based on recommendations from the United States Preventive Services Task Force (USPSTF).

"Endoscopist" means a physician who is licensed to perform a visual inspection of any cavity of the body by means of an endoscope.

"Familial adenomatous polyposis" or *"FAP"* means an inherited colorectal cancer syndrome and accounts for 1 percent of all cases of colorectal cancer. "Familial" means FAP runs in families; "adenomatous" means the type of polyps detected in the colon and small intestine that may become cancerous; and "polyposis" means the condition of having multiple colon polyps. The gene for FAP is on the long arm of chromosome 5 and is called the APC gene.

"Family history" means that a person's close relatives (parents, siblings or children) have had colorectal cancer and, therefore, the person is somewhat more likely to develop that type of cancer, especially if the family member developed the cancer at a young age. If many family members have had colorectal cancer, the chances that the person will develop colorectal cancer increase even more.

"Fecal immunochemical test" or *"FIT"* means the primary screening method for the IGS program to test for hemoglobin in the feces, a possible sign of colorectal cancer.

"Federally qualified health center" or *"FQHC,"* referred to in Iowa as a community health center or "CHC," means a federally funded nonprofit health center or clinic that serves medically underserved areas and populations. Federally qualified health centers provide primary care services regardless of ability to pay. Services shall be provided on a sliding fee scale based on ability to pay. The IGS program utilizes community health centers to provide services to target populations.

"Final diagnosis" means the process of identifying or determining the nature and cause of a disease or injury through evaluation of patient history, examination and review of laboratory data.

"Health care provider" means any physician, advanced registered nurse practitioner, or physician assistant who is licensed by the state of Iowa and provides care to IGS-enrolled participants.

"Hereditary nonpolyposis colorectal cancer" or *"HNPCC"* means an inherited colorectal cancer syndrome and accounts for 5 percent of all cases of colorectal cancer. "Hereditary" means HNPCC is inherited or can be passed from parent to child; "nonpolyposis" contrasts HNPCC to the inherited condition FAP where hundreds to thousands of polyps develop in the colon; "colorectal cancer" is the most frequent cancer that develops in these families. Patients with HNPCC have an 80 percent chance of developing colorectal cancer.

"Informed consent" means the participant has signed the IGS informed consent and release of medical information form and therefore voluntarily agrees to participate and receive colorectal services and appropriate follow-up through the IGS program. Consent for services can be canceled at any time by the participant.

"In-reach" means the method that will be used in the local program to recruit participants. In-reach targets existing clients through the Iowa care for yourself program and federally qualified health centers.

"Iowa care for yourself program" or *"IA CFY program"* means a program that provides breast and cervical cancer screening, diagnostics and cardiovascular-related intervention services to low-income, underinsured or uninsured women 40 to 64 years of age. The IA CFY program integrates program services, as possible, with the IGS program. Some IA CFY program participants have been enrolled through in-reach activities into the IGS program.

"Iowa get screened: colorectal cancer program" or *"IGS program"* means the state program funded through the federal Colorectal Cancer Control Program (CRCCP). This program requires policy and systems change, public education and awareness and limited screening activities. The IGS program has been made possible in Iowa through a cooperative agreement awarded to the department through the competitive bid grants procurement process by the United States Department of Health and Human Services, Division of the Centers for Disease Control and Prevention.

"Large intestine" means the last part of the digestive tract. The large intestine is divided into sections including the ascending which begins at the cecum on the right side, the transverse which is the horizontal section, and the descending which is on the left side and includes the sigmoid and the rectum. The primary function of the large intestine is the absorption of water and the formation and collection of feces.

"Local program" means the entity or facility in which IGS services are being offered through a contractual agreement with the department.

"Local program coordinator" means the individual within a local program who is providing services to a participant.

"Medical advisory board" or *"MAB"* means the body that provides oversight of the quality of screening services delivered through the IGS program.

"Oncologist" means a specialist physician who treats or studies the physical, chemical and biologic properties and features of a neoplasm, including causation, pathogenesis and treatment.

"Participant" means an individual enrolled in the IGS program to receive colorectal cancer screening services in accordance with the United States Preventive Services Task Force (USPSTF) recommendations.

"Pathologist" means a specialist physician who identifies diseases by studying cells and tissues under a microscope.

"Patient navigator" means the individual who identifies and coordinates resources for a participant with a screening diagnosis of colorectal cancer who may require physical, emotional, financial or other

support through the cancer journey. Navigation services are provided through a cooperative agreement with the American Cancer Society.

"Physician" means an individual licensed to practice under Iowa Code chapter 148.

"Physician assistant" means an individual licensed to practice under Iowa Code chapter 148C.

"Polyp" means a growth from a mucous membrane commonly found in organs such as the rectum, the uterus and the nose. Certain types of polyps, such as adenomas, may develop into cancer.

"Precancerous" means a condition that may become or is likely to become cancer.

"Primary care provider" means a health care provider who provides definitive care to a patient at the point of first contact and takes continuing responsibility for providing the patient's care.

"Provider agreement" means a signed cooperative agreement between the department and another party, for example, a health care provider.

"Radiologist" means a specialist physician trained in creating and interpreting pictures of areas inside the body. The pictures are produced with X-rays, sound waves or other types of energy.

"Rectum" means the last part of the large intestine where stool is stored prior to evacuation through the anus (external opening of the digestive system).

"Referral" means directing program participants with abnormal screening results to appropriate resources for follow-up action.

"Screening" means the search for disease, such as cancer or precancerous polyps in people without symptoms.

"Secondary complication" means an additional problem that arises following a procedure, treatment or illness.

"Surveillance" means a periodic colonoscopy as recommended by a physician on a case-by-case basis for participants with a prior history of adenoma(s) or colorectal cancer in accordance with USPSTF recommendations. The purpose of surveillance is to rescreen and remove polyps that were missed on the initial colonoscopy or that developed in the interval since the previous colonoscopy.

"Underinsured" means an individual with income at 250 percent of the federal poverty guideline or lower with health insurance that has unreasonably high copayments, deductibles or coinsurance.

"United States Preventive Services Task Force" or *"USPSTF"* means an independent panel of nonfederal health care experts that evaluates the latest scientific evidence on clinical preventive services and then sets recommendations for preventive services including colorectal cancer screening. These recommendations by USPSTF are the guidelines that are followed for recommended colorectal cancer screening by the IGS program.

[**ARC 0060C**, IAB 4/4/12, effective 5/9/12]

641—10.3(135) Components of the Iowa get screened (IGS): colorectal cancer program. The program shall include the following key components:

10.3(1) Program and fiscal management shall be conducted by ensuring strategic planning, implementation, coordination, integration and evaluation of all programmatic activities and administrative systems, as well as the development of key communication channels and oversight mechanisms to aid in these processes. Program management shall ensure that infrastructure adequately supports service delivery.

10.3(2) Service delivery to screen for colorectal cancer for participants enrolled in the IGS program shall be provided by local program coordinators and enrolled heath care providers through contractual arrangements.

a. The IGS program provides reimbursement for the following screening tests, procedures, preparations and tissue analyses when those services are provided by a participating health care provider who has a provider agreement with the IGS program. Payment is based on Medicare Part B participating provider rates (Title XIX).

(1) Fecal immunochemical tests annually;

(2) Colonoscopy every 10 years from initial screen or as prescribed by a physician for surveillance in accordance with USPSTF recommendations;

(3) Biopsy/polypectomy during a colonoscopy;

(4) Bowel preparation;

(5) Moderate sedation for colonoscopy;

(6) One office visit related to IGS program-covered colorectal cancer tests;

(7) One office visit related to colorectal cancer follow-up diagnostic test results;

(8) Total colon examination with either colonoscopy (preferred) or double contrast barium enema if medically prescribed by doctor;

(9) Pathology services.

b. The IGS program does not provide reimbursement for the following:

(1) Screening tests requested at intervals sooner than recommended by the USPSTF;

(2) CT colonography (or virtual colonoscopy) as a primary screening test;

(3) Computed tomography scans (CT or CAT scans) requested for staging or other purposes;

(4) Surgery or surgical staging, unless specifically required and approved by the IGS program's MAB to provide a histological diagnosis of cancer;

(5) Any treatment related to the diagnosis of colorectal cancer;

(6) Any care or services for complications that result from screening or diagnostic tests provided by the IGS program;

(7) Medical evaluation of symptoms that make individuals at high risk for CRC;

(8) Diagnostic services for participants who had an initial positive screening test performed outside of the program;

(9) Management and testing (e.g., surveillance colonoscopies and medical therapy) for medical conditions, including inflammatory bowel disease, ulcerative colitis or Crohn's disease;

(10) Genetic testing for participants who present with a history suggestive of a hereditary nonpolyposis colorectal cancer (HNPCC) or familial adenomatous polyposis (FAP);

(11) Use of propofol as anesthesia during endoscopy, unless specifically required and approved by the IGS program's MAB in cases where the participant cannot be sedated with standard moderate sedation; and

(12) Treatment for colorectal cancer.

c. A local program that has a signed contract with the IGS program shall be responsible for the following:

(1) Recruitment of participants;

(2) Eligibility determination;

(3) Enrollment;

(4) Patient support services;

(5) Tracking of follow-up care;

(6) Documentation and data reporting; and

(7) Recall of participants who remain eligible for continued services.

d. Local program coordinators must use a case management services approach throughout the screening process to ensure that all participants:

(1) Receive program information and colorectal cancer educational materials;

(2) Are assisted, according to each participant's need, to reduce barriers to screening including, for example, fears, cultural beliefs, language, transportation, understanding of information, and insurance enrollment;

(3) Receive guidance throughout the screening, diagnostic and treatment processes;

(4) Understand colorectal cancer screening procedures and health care provider recommendations;

(5) Receive appropriate services according to diagnosis including follow-up; and

(6) Have the opportunity to get questions answered throughout the process.

e. A health care provider that has a provider agreement with the department shall be subject to the following provisions:

(1) The health care provider agrees that reimbursement of procedures and services provided shall not exceed the amount that would be paid under Medicare Part B participating provider rates of Title XVIII of the Social Security Act.

(2) The health care provider shall provide the participant and local program coordinator timely colorectal cancer screening results and follow-up recommendations.

(3) The gastrointestinal health care provider shall submit pathology specimens to a Clinical Laboratory Improvement Amendments (CLIA)-certified laboratory for processing.

(4) The health care provider shall practice according to the current standards of medical care for colorectal cancer early detection, diagnosis and treatment.

(5) The health care provider or entity shall submit universal claim forms, originals of the HCFA 1500 or the UB 92, for reimbursement of IGS program-covered services in accordance with the provider agreement.

(6) The health care provider may deliver services in a variety of settings. Service delivery shall include:

1. Working with local coordinators as they refer IGS program participants to provide follow-up or initial colorectal cancer screening services;

2. Providing a point of contact for program communication with the department to relay information that may include updating data, follow-up information and final diagnosis;

3. Providing screening services for a specific geographic area; and

4. Providing referral and follow-up for participants with abnormal screening results.

(7) The health care provider shall ensure compliance with this chapter and other terms and conditions included in the provider agreement or contract.

10.3(3) IGS program and contracted local program staff shall conduct referral, tracking and follow-up utilizing a Web-based data system to monitor each enrolled participant's receipt of screening, rescreening and diagnostic procedures.

a. The enrolled participant shall be notified within 30 days of the screening service by contracted local program staff or the enrolled health care provider of the results of the service, whether the results are normal, benign or abnormal.

b. The contracted local program shall use the IGS program data system to enter appropriate and timely clinical services, including screening and diagnostic test results, follow-up, and completion of screening services.

c. If the enrolled participant has an abnormal colorectal cancer screening test, the health care provider or local coordinator shall provide to the participant a comprehensive referral directing the participant to appropriate additional diagnostic or treatment services. When the results of a FIT screen are positive, the local coordinator shall work with the participant and enrolled health care provider to schedule a colonoscopy.

d. The local program coordinator shall follow up with the provider to obtain results if not provided in a timely manner.

e. IGS program staff shall follow up with the local program coordinator if results have not been entered in the IGS data system in a timely manner.

10.3(4) If treatment services are needed, the participant's health care provider may perform a consultation in order to educate the participant about treatment options. If more than two office visits are warranted for a participant throughout the screening cycle, subsequent office visits must be authorized by IGS program staff.

10.3(5) IGS program staff shall use quality assurance and process improvement techniques including use of established standards, systems, policies and procedures to monitor, assess and identify practical methods for improvement of the IGS program and its components. Quality assurance and process improvement are integral components of the IGS program and contribute to program success. As part of the vision, to reduce morbidity and mortality from colorectal cancer, high-quality, timely participant services are essential. IGS program requirements and monitoring activities shall include:

a. Professional licensure and accreditation. Health facilities and health care providers must be currently licensed or accredited to practice in the state of Iowa.

b. Reporting standards. Radiological, laboratory and pathology and other results must be reported according to national standards.

c. Standards for adequacy of follow-up. Data reports shall track appropriate and timely short-term, diagnostic and rescreening services.

d. A case management services approach. Local program staff shall follow the participants through the colorectal cancer screening process from the first contact to final diagnosis and as needed for referral to treatment and patient navigation services. Local program staff shall be responsible for documenting these activities as described in paragraph 10.3(2)*"d."*

e. Accurate data collection and documentation.

(1) Colorectal cancer data elements (CCDEs) are reported to CDC semiannually by the department.

(2) Site visits are conducted at local program sites to provide technical assistance, give feedback on program performance, evaluate case management process and if needed conduct a walk-through of current services to provide feedback.

f. Evaluation. Workplans shall be reviewed and surveys conducted in the community and with program partners. Reports on progress and face-to-face meetings shall be conducted routinely and on an as-needed basis to assess how the IGS program is meeting CDC program objectives.

g. Process improvement and systems change activities.

h. Adherence to CDC policies and guidelines.

i. Approval and utilization of additions to the local program allowable procedures list.

10.3(6) Professional development shall be provided by the IGS program and contracted local program staff through a variety of channels including educational activities that enable professionals to perform their jobs competently, to identify needs and resources, and to ensure that health care delivery systems provide appropriate clinical outcomes for colorectal cancer screening services.

10.3(7) The IGS program and contracted local program staff shall provide in-reach education and recruitment that involve the systematic design and delivery of clear and consistent messages about colorectal cancer (CRC) and the benefits of early detection using a variety of methods and strategies. In-reach activities shall focus on men and women who have never or rarely been screened for CRC and shall work toward the removal of barriers to care (e.g., by providing respite care, interpreter services and transportation) through collaborative activities with other community organizations. In-reach shall be targeted toward the participants already being served through the IA CFY program and patients at FQHCs. Public education and outreach activities for community awareness of CRC are supported and mandatory for the project.

10.3(8) The IGS program may develop coalitions and partnerships to establish a common agreement for sharing resources and responsibilities to achieve the common goal of reducing colorectal cancer mortality.

10.3(9) The IGS program shall conduct surveillance utilizing continuous, proactive, timely and systematic collection, analysis, interpretation and dissemination of colorectal cancer screening prevalence, survival and mortality rates. Studies shall be conducted utilizing minimum data elements and other data sources to establish trends of disease, diagnosis, treatment, and research needs. IGS program planning, implementation and evaluation shall be based on the data.

10.3(10) Evaluation by the IGS program evaluator shall be conducted through documentation of services, operation processes at the state and local program levels and outcomes of the IGS program. The evaluation shall include face-to-face interviews with state and local IGS program staff involved in IGS program delivery. IGS program evaluation shall include suggestions to help IGS and local program staff meet the recommendations as set in the CRCCP program manual. Recommendations shall then be incorporated into the program workplan by the state staff.

[**ARC 0060C**, IAB 4/4/12, effective 5/9/12]

641—10.4(135) Medical advisory board. The medical advisory board or MAB is made up of a diverse group of professionals (e.g., primary care providers, nurses, endoscopists, oncologists, pathologists, radiologists, coordinators, patient navigators and the IGS program evaluator) who offer their expertise on issues including enrollment, screening, diagnosis and treatment.

10.4(1) The MAB provides oversight of the quality of screening services delivered. MAB members may participate in other IGS program activities including colorectal cancer awareness month activities and education projects.

10.4(2) The primary role of the MAB is to:

a. Assist in the establishment of IGS program eligibility and service delivery criteria (e.g., defining underinsured, establishing guidelines for diagnostic testing, surveillance intervals, etc.);

b. Monitor quality of screening, rescreening, diagnostic and surveillance services;

c. Assist with identification of resources for treatment and referral of individuals who are ineligible for the program;

d. Provide direction on IGS program policy development and data collection; and

e. Approve additions to the IGS program allowable procedures list, as needed.

[**ARC 0060C**, IAB 4/4/12, effective 5/9/12]

641—10.5(135) Participant eligibility criteria. An applicant for the IGS program must satisfy the criteria outlined in this rule. If an applicant does not meet these criteria, the applicant shall be provided information by contracted local program staff regarding IowaCare, free care or sliding-fee clinics available in the area in which the applicant lives.

10.5(1) *Age.* Individuals 50 through 64 years of age shall be the target population to receive colorectal cancer screening.

10.5(2) *Income.*

a. The IGS program income guidelines are based upon 250 percent of the federal poverty level (FPL), which is set annually by the Centers for Medicare and Medicaid Services (CMS). New IGS program income guidelines will be adjusted following any change in CMS guidelines.

b. Self-declaration of income may be accepted.

c. Eligibility shall be based on net income for the household.

d. Assets shall not affect income status and shall not be counted when eligibility under the IGS program is determined.

10.5(3) *Insurance.*

a. The IGS program shall determine individuals to be uninsured if they do not have health insurance coverage.

b. The IGS program shall determine individuals to be underinsured if they have health insurance with unreasonably high copayments, deductibles or coinsurance or the insurance does not cover the IGS program's covered services.

c. Individuals who have Medicaid or Medicare Part B are not eligible. Individuals who have IowaCare, Medicaid with spend down, or Iowa family planning network may be eligible.

10.5(4) *Residency.*

a. Individuals must reside in the state of Iowa.

b. Individuals shall have an established address and contact information as needed for program staff to provide screening results, rescreens, and follow-up services.

10.5(5) *Risk level.* Individuals with an average or increased risk for developing colorectal cancer as defined by the recommendations of the USPSTF may qualify for IGS program services.

10.5(6) *Ineligible.* The IGS program does not provide coverage for:

a. Individuals with Medicare Part B coverage.

b. Individuals 49 years of age and younger.

c. Individuals 65 years of age and older.

d. Individuals who do not have a primary care provider.

e. Individuals at high risk for developing colorectal cancer. Individuals at high risk include:

(1) A genetic diagnosis of familial adenomatous polyposis (FAP) or hereditary nonpolyposis colorectal cancer (HNPCC),

(2) A clinical diagnosis or suspicion of FAP or HNPCC, or

(3) A history of inflammatory bowel disease (ulcerative colitis or Crohn's disease).

f. Individuals experiencing the following gastrointestinal symptoms:

(1) Rectal bleeding, bloody diarrhea, or very dark blood in the stool within the past six months;
(2) Prolonged change in bowel habits;
(3) Persistent/ongoing abdominal pain;
(4) Recurring symptoms of bowel obstruction; or
(5) Significant unintentional weight loss.
[**ARC 0060C**, IAB 4/4/12, effective 5/9/12]

641—10.6(135) Participant application procedures for IGS program services.

10.6(1) *Enrollment.* After an individual is determined eligible for services and agrees to participate in the IGS program, the following provisions shall apply:

a. A prospective participant must complete the Informed Consent and Release of Medical Information form and submit it to the local program coordinator in order to become enrolled in the program and be considered a program participant. The date on the signed form shall be the participant's enrollment date.

b. Upon enrollment, the participant shall be eligible for services for 12 months beginning from the date of enrollment, subject to restrictions in funding and program coverage as provided in subrules 10.6(2), 10.6(3) and 10.7(1).

10.6(2) *Reenrollment.*

a. A participant's continued eligibility for IGS program coverage shall be determined annually.

b. The IGS local program coordinator shall reenroll the participant in the program no more than 30 days prior to the end of the 12-month coverage period in accordance with USPSTF guidelines or a physician's recommendation.

c. When a participant reenrolls, the participant must complete, sign and return the consent and release form to the local program coordinator before receiving any further services.

10.6(3) *Termination of enrollment.* The IGS program shall terminate a participant's enrollment if the participant:

a. Requests termination from the program;

b. No longer meets the criteria set forth in rule 641—10.5(135);

c. Does not return a signed IGS program consent and release form; or

d. Refuses to receive screening and diagnostic services through an IGS program health care provider.
[**ARC 0060C**, IAB 4/4/12, effective 5/9/12]

641—10.7(135) Priority for program expenditures.

10.7(1) In the event the IGS program director certifies that there are inadequate funds to meet participants' needs, either attributable to a reduction in federal funding from the CDC or to a projected enrollment of participants in excess of anticipated enrollment, the program director may restrict new applicants' participation in the IGS program. First priority shall be given to individuals who have never been screened for CRC.

10.7(2) In the event that the financial demand abates, the program director shall withdraw the financial shortfall certification, at which time the individual shall be eligible for program services in accordance with rule 641—10.5(135).
[**ARC 0060C**, IAB 4/4/12, effective 5/9/12]

641—10.8(135) Right to appeal. If an individual disagrees with or is dissatisfied with IGS program eligibility, the covered-service determination or the decision of the IGS program, the individual has the right to appeal the decision or action.

10.8(1) The appeal shall be in writing and shall be submitted within ten working days of the decision or action to the local program staff with whom the individual has been working.

10.8(2) The local program staff shall contact an IGS program staff person with the information regarding the appeal within three business days.

10.8(3) IGS program staff shall confer with the bureau chief for the IGS program at the department and provide a decision to the local program staff within five business days. A decision made by IGS

program staff shall be delivered by telephone, if possible, to the individual making the appeal and shall be followed by a written notification of the decision. The decision of IGS program staff shall be considered a final agency decision in accordance with Iowa Code chapter 17A.
[**ARC 0060C**, IAB 4/4/12, effective 5/9/12]

641—10.9(135) Colorectal cancer treatment. The IGS program does not pay for colorectal cancer treatment services. A participant will be assisted with enrolling in the IowaCare program, in the event treatment services are needed. If a participant needs treatment, the local program coordinator will refer the participant to an American Cancer Society patient navigator to identify and coordinate resources for the participant who may require physical, emotional, financial or other support through the cancer journey. The patient navigator and IGS program staff will work together to assist a participant needing treatment. It is an expectation of the cooperative agreement that a participant gets help obtaining treatment services free or at an affordable cost based on the participant's annual income and ability to pay for the services.
[**ARC 0060C**, IAB 4/4/12, effective 5/9/12]

These rules are intended to implement Iowa Code sections 135.11(1) and 135.39 and 42 U.S.C. Section 241(a), as amended.

[Filed ARC 0060C (Notice ARC 9997B, IAB 2/8/12), IAB 4/4/12, effective 5/9/12]

CHAPTER 12
APPROVAL OF CONFIRMATORY LABORATORIES FOR PRIVATE SECTOR DRUG-FREE WORKPLACE TESTING

641—12.1(730) Purpose. The purpose of this chapter is to describe the procedures that a laboratory must follow to receive approval by the department to conduct confirmatory testing of samples for the detection of alcohol or other drugs, or their metabolites, in employees or prospective employees.

641—12.2(730) Definitions. For the purpose of these rules, the following definitions shall apply:

"Alcohol" means ethanol, isopropanol, or methanol.

"Alcohol or drug testing" means analysis of a sample for the purpose of detecting the presence or absence of alcohol or other drugs, or their metabolites, in the sample tested.

"CLIA" means Clinical Laboratory Improvement Amendments of 1988.

"CMS" means Centers for Medicare and Medicaid Services. CMS is the federal agency responsible for implementing and administering CLIA regulations.

"Confirmatory test" means a test for alcohol or other drugs, or their metabolites, using a testing method as stipulated in rule 641—12.9(730), "Confirmatory testing."

"Department" means the Iowa department of public health.

"Director" means the director of the Iowa department of public health.

"Drug" means a substance considered a controlled substance and included in Schedule I, II, III, IV, or V under the federal Controlled Substances Act, 21 U.S.C. Subsections 801 et seq.

"Employee" means a person in the service of an employer in this state and includes the employer and any chief executive officer, president, vice president, supervisor, manager, and officer of the employer who is actively involved in the day-to-day operations of the business.

"Employer" means a person, firm, company, corporation, labor organization, or employment agency, which has one or more full-time employees employed in the same business, or in or about the same establishment, under any contract of hire, express or implied, oral or written, in this state. "Employer" does not include the state, a political subdivision of the state, including a city, county, or school district, the United States, the United States Postal Service, or a Native American tribe.

"GC/MS" means gas chromatography/mass spectrometry.

"Laboratory" means a facility inside or outside the state of Iowa approved to conduct confirmatory testing of samples for the detection of alcohol or other drugs, or their metabolites.

"Medical review officer" means a licensed physician, osteopathic physician, chiropractor, nurse practitioner, or physician assistant authorized to practice in any state of the United States, who is responsible for receiving laboratory results generated by an employer's drug or alcohol testing program, and who has knowledge of substance abuse disorders and has appropriate medical training to interpret and evaluate an individual's confirmed positive test result together with the individual's medical history and any other relevant biomedical information.

"Prospective employee" means a person who has made application, whether oral or written, to an employer to become an employee.

"Sample" means such sample from the human body capable of revealing the presence of alcohol or other drugs, or their metabolites. However, "sample" does not mean blood except as authorized pursuant to Iowa Code subsection 730.5(7), paragraph *"l."* For the purpose of these rules, the substances determined by the department to be samples from the human body capable of accurately and reliably revealing the presence of alcohol or other drugs, or their metabolites, are urine, breath, blood, and saliva.

"Specimen" means a part taken from a sample to determine the character of the whole sample.

"UHL" means university (state) hygienic laboratory.

641—12.3(730) Powers and duties. The department shall be responsible for the following actions:

12.3(1) Processing applications from laboratories requesting approval to conduct confirmatory testing pursuant to Iowa Code subsection 730.5(7), paragraph *"e."*

12.3(2) Developing an application package.

a. The package shall be provided to all laboratories requesting approval to conduct confirmatory testing for alcohol or other drugs, or their metabolites.

b. The package shall contain application procedures, a copy of Iowa Code section 730.5, a copy of these administrative rules, a standardized application form and a self-inspection questionnaire.

c. The self-inspection questionnaire shall assist the department in assessing the quality of a laboratory's performance as a confirmatory testing laboratory. This questionnaire will comprise the major but not the sole objective criteria used during the initial on-site inspection when conducted by the UHL.

d. The package shall be available upon request from the Iowa Department of Public Health, Division of Health Protection, Private Sector Drug Testing Program, Lucas State Office Building, Des Moines, Iowa 50319-0075.

12.3(3) Reviewing each application submitted and determining the adequacy for approval.

12.3(4) Designating the UHL to conduct an on-site inspection of each approved confirmatory laboratory at least once every two years. Inspection may be waived by the director if the laboratory has been inspected and accredited for forensic urine drug testing by the College of American Pathologists, or if the laboratory has been inspected and certified, licensed, or approved to conduct confirmatory testing by another state whose requirements are at least equal to Iowa's.

12.3(5) Maintaining and providing upon request an updated list of all approved confirmatory laboratories.

12.3(6) Providing written notice of approval and assigning an expiration date.

641—12.4(730) Application procedures and requirements. Laboratories desiring to conduct confirmatory testing for Iowa's employers shall apply to the department for approval. Each laboratory requesting Iowa approval to conduct confirmatory testing shall provide the following to the department:

12.4(1) A completed laboratory survey checklist on a form provided by the department.

12.4(2) A completed self-inspection questionnaire provided by the department that includes:

a. A list of alcohol or other drugs, or their metabolites, being tested.

b. Copies of the two most recent and relevant graded proficiency test reports from a recognized proficiency testing program.

c. Personnel qualifications for all staff involved in the technical and administrative management of the alcohol or drug testing laboratory.

d. Copies of the forms used to report test results.

e. Chain of custody protocols and copies of the chain of custody forms used.

f. Sample collection procedures.

g. Confirmation procedures.

12.4(3) Proof of enrollment in a recognized proficiency testing program. Recognized programs include those approved by CMS.

12.4(4) Acceptable performance over a 12-month period in all appropriate areas of proficiency testing for alcohol or other drugs, or their metabolites, shall be documented and maintained on an ongoing basis. Acceptable performance is as follows:

a. Initial approval shall require at least 80 percent accuracy in the last two graded proficiency test cycles with no false positive results.

b. Renewal shall require at least 80 percent accuracy each year on graded proficiency surveys with no false positive results.

641—12.5(730) Requirements of laboratory personnel involved in confirmatory testing for alcohol or other drugs, or their metabolites.

12.5(1) The laboratory director shall be a pathologist or doctoral level individual who qualifies as a clinical laboratory director under CLIA regulations.

12.5(2) Supervisors of analysts shall possess at least a bachelor of science degree in chemistry, medical technology, or comparable education and two years of analytical alcohol or drug testing experience. Supervisors must also have training in the theory and practice of laboratory procedures

and an understanding of quality control concepts. Annual verification of the supervisor's skills must be documented by the laboratory director.

12.5(3) Analysts shall possess the necessary training and skills for assigned tasks. These individuals shall possess at least two years of college education in the physical or biological sciences. At a minimum, analysts shall be graduates of a medical laboratory technician program which is recognized by the department or have at least two years of college with a minimum of nine semester hours in chemistry.

12.5(4) Laboratory directors, supervisors and analysts involved in alcohol or drug testing shall annually complete at least one in-service continuing education program related to alcohol or drug testing. Continuing education programs include formal training programs where continuing education units are awarded, informal in-house training programs, and relevant correspondence courses. Dates, titles and subject matter for each completed course shall be documented and the information shall be available for review.

12.5(5) The following information about each of the laboratory staff involved in alcohol or drug testing shall be retained for two years from date of termination and shall be available for review.

a. Résumé of training and experience.

b. Certificate or license.

c. Job description.

641—12.6(730) Quality assurance program and procedure manual requirements. All approved confirmatory laboratories shall have a written quality assurance program and a procedure manual which encompasses all aspects of the alcohol or drug testing process.

12.6(1) Approved laboratories shall have written procedures for performing alcohol or drug testing which shall include the following:

a. Sample acquisition.

b. Chain of custody.

c. Sample and report security.

d. Test performance.

e. Reporting of results.

f. Confidentiality.

12.6(2) The quality assurance program and procedure manuals shall be available for review during any on-site inspection.

12.6(3) Approved laboratories shall review their performance in each of the above areas every 12 months.

12.6(4) Approved laboratories are responsible for developing the criteria necessary to establish and maintain an effective quality assurance program for confirmatory testing of alcohol or other drugs, or their metabolites.

641—12.7(730) Analytical quality control. The number and position of control specimens tested within a batch and the number of calibrators used for each batch of specimens shall be consistent with generally accepted laboratory practice for the methodology used to conduct confirmatory testing.

12.7(1) Positive and negative controls shall be used in testing each batch of specimens.

12.7(2) Procedures shall be implemented and documented to ensure that carryover from a positive specimen does not contaminate other subsequent specimens in that batch.

12.7(3) Approved laboratories shall develop criteria for the detection and rejection of adulterated samples.

641—12.8(730) Sample security and confidentiality of test results. Samples and reports must never be left unattended or unsecured.

12.8(1) Complete chain of custody documentation shall be maintained for each sample from the time of collection from the employee or prospective employee to the time the sample is discarded. Each time

the sample is handled or transferred, the individual receiving the sample, the time and date of transfer, and the recipient or destination of the sample shall be documented.

12.8(2) If the first portion of the sample yielded a confirmed positive test result, the laboratory shall store the second portion of that sample until receipt of a confirmed negative test result or for a period of at least 45 calendar days following the completion of the initial confirmatory testing. Urine and blood samples shall be retained in secure storage at freezing temperatures.

12.8(3) All samples for which a negative test result was reported shall be disposed of within 5 working days after issuance of the negative test result report.

641—12.9(730) Confirmatory testing.

12.9(1) Reports for alcohol shall be confirmed by gas chromatography, or a test that is recognized by the department as an equivalent test before being reported as positive (or negative).

12.9(2) Reports for drugs or their metabolites, other than alcohol, shall not be issued in the absence of confirmation by GC/MS or a scientifically equivalent test approved by the department.

12.9(3) Complete chain of custody procedures shall be used for referred samples.

641—12.10(730) Documentation of the confirmatory testing process. The following documents shall be retained for at least two years and, if requested, made available for inspection.

12.10(1) Chain of custody documentation shall be maintained for each sample tested with the identification of the sample, the person(s) handling and testing the sample, the storage of the sample, and the eventual disposal of the sample.

12.10(2) Documents regarding the following: analytical information for each batch assayed; instrument identification; calibration records; identification of reagent lot numbers and expiration dates; quality control results; and any other pertinent information.

12.10(3) Copies of proficiency testing results for ongoing monitoring and evaluation of laboratory performance. Approved confirmatory laboratories inspected by the UHL shall submit copies of proficiency testing results to the UHL or shall ensure that proficiency testing programs submit copies of proficiency testing results directly to the UHL on their behalf.

12.10(4) Current procedure manuals must be maintained for all procedures.

12.10(5) An annual review of manuals shall be performed and documented. Alterations and additions to procedures shall be incorporated into manuals and approved by the laboratory director before implementation.

641—12.11(730) Reporting of confirmed positive test results to the medical review officer.

12.11(1) Each report shall identify the alcohol or other drugs, or their metabolites, being tested with the results of positive/negative or detected/nondetected clearly recorded.

12.11(2) Approved confirmatory laboratories shall have available a written summary of the established sensitivity levels used for the confirmatory tests conducted for alcohol or other drugs, or their metabolites. However, this information need not be issued with each report.

12.11(3) Approved confirmatory laboratories shall have written procedures for making both written and telephone reports to the medical review officer.

12.11(4) All test results must be reviewed and signed by the laboratory director, or a qualified designee, before being reported to the medical review officer.

641—12.12(730) Reporting requirements to department. Pursuant to Iowa Code subsection 730.5(16), approved confirmatory laboratories shall file a report with the department by March 1 of each year. The address is Iowa Department of Public Health, Division of Health Protection, Private Sector Drug Testing Program, Lucas State Office Building, Des Moines, Iowa 50319-0075. The report for the state of Iowa shall include the number of positive and negative drug or alcohol test results for the previous calendar year for the following if available to the laboratory:

1. Employees who work in non-safety-sensitive positions,
2. Employees who work in safety-sensitive positions,

3. Employees during and after completion of drug or alcohol rehabilitation,
4. Employees as a consequence of reasonable suspicion drug or alcohol testing,
5. Prospective employees,
6. As a consequence of federal law or regulation, or by law enforcement,
7. As a consequence of accident investigation in the workplace,
8. The types of drugs which were found in the positive drug tests,
9. All significant available demographic factors relating to the positive test pool, and
10. Total number of positive and negative drug or alcohol test results for the previous calendar year for all employees and prospective employees who were tested.

641—12.13(730) Approval, renewal, and inspection fees. At the time of initial application and each year thereafter, laboratories shall remit to the department a fee in an amount sufficient to reimburse the department for expenses incurred in administering the confirmatory laboratory approval program. All fees shall be made payable to the Iowa Department of Public Health and are as follows:

12.13(1) *Approval.* An administration fee of $600 is required for new applications, including applicants seeking approval through reciprocity.

12.13(2) *Renewal.* An administration fee of $300 is required to renew laboratory approval.

12.13(3) *Inspections by the UHL.* Reimbursement for actual on-site inspection and related expenses shall be assessed to each laboratory after the completion of each inspection. Expenses related to the on-site inspection shall be reimbursed to the UHL. These expenses shall reflect the actual cost incurred for personnel time and travel expenses consistent with state of Iowa travel reimbursement policies and procedures. These expenses shall also include the time necessary for UHL inspection staff to:

a. Review the application and related laboratory materials in preparation for the on-site inspection,
b. Generate the written laboratory report regarding inspection findings,
c. Conduct postinspection follow-up activities, if any, and
d. Review proficiency test results on an ongoing basis.

641—12.14(730) Renewal. Laboratory approval to continue confirmatory testing for alcohol or other drugs, or their metabolites, must be renewed annually. The request for renewal shall include the following:

1. Name and address of laboratory.
2. Renewal fee.
3. Information that reflects any changes that occurred during the current approval period.
4. Copy of supporting documents if accredited for forensic urine drug testing by the College of American Pathologists, or if certified, licensed, or approved through reciprocity.

641—12.15(730) Reciprocity.

12.15(1) Confirmatory laboratories certified, licensed, or approved by another state to conduct testing for alcohol or other drugs, or their metabolites, may request Iowa approval through reciprocity by:

a. Completing and submitting the department's application package, and
b. Including a copy of their current certificate, license, or approval document from the state whose requirements are at least equal to Iowa's.

12.15(2) Laboratories approved through reciprocity that lose their certification, license or approval from another state shall notify the department within five working days.

641—12.16(730) Changes during approval periods. The following changes that occur during an approval period shall be submitted to the department within five working days from the date the change took place:

1. Change in laboratory director.
2. Change of address.
3. Change in supervisor.

4. Change in confirmation procedures.
5. Change in proficiency testing program.
6. Addition or subtraction of alcohol or other drugs, or their metabolites, being tested.
7. Change of ownership.
8. Loss of accreditation for forensic urine drug testing by the College of American Pathologists.

641—12.17(730) Enforcement. Upon a determination of noncompliance by the director that these rules have been violated, the director may immediately move to suspend, modify, or revoke any approval issued under these rules.

641—12.18(730) Denial, suspension, modification or revocation of approval. Any one of the following can result in denial, suspension, modification or revocation of approval. Failure of the confirmatory laboratory to:

1. Remain in compliance with the requirements of these rules.
2. Provide required documentation, including documentation of laboratory personnel and proficiency test results.
3. Maintain confidentiality.
4. Meet proficiency testing criteria.
5. Provide correct information.
6. Satisfactorily complete the two most recent and relevant graded proficiency test reports from a recognized proficiency testing program (for initial approval).
7. Correctly represent facts on a self-inspection questionnaire or other application documents.
8. Pass an on-site inspection conducted by the College of American Pathologists for forensic urine drug testing, or by another state whose requirements are at least equal to Iowa's, or by the UHL.

641—12.19(730) Restoration of approval. A confirmatory laboratory whose approval has been suspended, modified, or revoked may be reinstated within 90 days following the receipt of the following:

1. Documentation of actions that correct the reasons for suspension, modification, or revocation.
2. Documentation of a successful on-site inspection, if necessary, conducted by the College of American Pathologists for forensic urine drug testing, or by another state whose requirements are at least equal to Iowa's, or by the UHL.

641—12.20(730) Appeals process.

12.20(1) *Denial.* Laboratories shall receive written notice by certified mail, return receipt requested, setting forth the reason(s) for denial. The adverse action shall become effective 30 days after receipt of the notice unless the applicant, within 30 days, gives written notice to the department requesting a hearing. In that event, the notice shall be deemed to be suspended.

12.20(2) *Suspension, modification, or revocation.* Confirmatory laboratories shall receive written notice by certified mail, return receipt requested, setting forth the reason(s) for suspension, modification, or revocation. The adverse action shall become effective 30 days after receipt of the notice unless the aggrieved party, within 30 days, gives written notice to the department requesting a hearing. In that event, the notice shall be deemed to be suspended.

12.20(3) *Contested cases.* The procedures for contested cases as set out in Iowa Code chapter 17A and the rules adopted by the department in 641—Chapter 173 shall be followed in all cases where proper notice has been made to the department of the intent to formally contest any denial, suspension, modification, or revocation of approval.

641—12.21(730) Complaints. The department shall accept complaints of alleged problems relating to confirmatory laboratory procedures. The information shall state in as specific a manner as possible the basis for the complaint. The complaint shall be presented in writing, in person or by telephone to the Iowa Department of Public Health, Division of Health Protection, Private Sector Drug Testing Program, Lucas State Office Building, Des Moines, Iowa 50319-0075.

Within 20 working days of the receipt of the complaint, the department shall communicate with the laboratory director for initial evaluation of the specific matters alleged in the complaint. The complainant shall be informed of the results of the action taken by the department.

These rules are intended to implement Iowa Code section 730.5 as amended by 1998 Iowa Acts, House File 299.

[Filed emergency 2/5/88 after Notice 12/16/87—published 2/24/88, effective 2/5/88]
[Filed 5/16/94, Notice 3/30/94—published 6/8/94, effective 7/13/94]
[Filed emergency 4/16/98—published 5/6/98, effective 4/16/98]
[Filed 7/10/98, Notice 5/6/98—published 7/29/98, effective 9/2/98]
[Filed 3/9/06, Notice 2/1/06—published 3/29/06, effective 5/3/06]

CHAPTER 13
MILK AND MILK PRODUCTS

[Prior to 7/29/87, Health Department[470]]

Rescinded IAB 1/30/08, effective 3/5/08

CHAPTER 14
WATER TREATMENT SYSTEMS

641—14.1(714) Purpose. The purpose of these rules is to establish the requirements and procedures for the registration and sale of water treatment systems. These rules are established pursuant to Iowa Code section 714.16, which prohibits a person selling, leasing or renting, or advertising the sale, lease or rental of a water treatment system in Iowa from making false or deceptive representations that the water treatment system will reduce the concentration of one or more contaminants in drinking water.

641—14.2(714) Applicability. The provisions of this chapter apply to the seller and manufacturer of a water treatment system offered for sale, lease, or rent in Iowa for which representations are made that the water treatment system will reduce the concentration of one or more contaminants in drinking water. Individual water treatment systems installed as central treatment for a public water system under the rules of the Iowa department of natural resources are not required to comply with these rules.

641—14.3(714) Definitions.

"Annual registration" means the renewal of registration of a water treatment system for years subsequent to the initial registration.

"ANSI" means the American National Standards Institute, 25 W. 43rd Street, New York, New York 10036. ANSI reviews and accredits testing agencies and the standards processes of agencies that generate and maintain product standards.

"Buyer" means the person to whom a water treatment system is being sold, leased, or rented.

"Consumer information pamphlet" means a publication which explains water quality, health effects, quality expectations for drinking water, and the effectiveness and functions of water treatment systems.

"Consummation of sale" means the completion of the act of selling, leasing, or renting. Where the water treatment system is ordered by telephone, mail, or Internet, "consummation of sale" means delivery.

"Contaminant" means any particulate, chemical, microbiological, or radiological substance or parameter in drinking water which has a potentially adverse health effect and for which a maximum contaminant level (MCL) has been established. "Contaminant" does not include chlorine, chloramine, or chlorine dioxide. A substance or parameter becomes a contaminant on the effective date of the United States Environmental Protection Agency (USEPA) rule establishing the MCL in the national primary drinking water regulations.

"Department" means the Iowa Department of Public Health, Lucas State Office Building, 321 E. 12th Street, Des Moines, Iowa 50319-0075.

"Drinking water" means water intended for human consumption.

"Initial registration" means the first registration of a water treatment system after performance testing.

"Label" means the written, printed, or graphic matter attached to or printed on the water treatment system so it is not likely to be separated during normal shipping and handling and that can only be removed with a purposeful effort by the owner.

"Manufacturer's performance data sheet" or *"PDS"* means a booklet, document, or other printed material that contains, at a minimum, the information required pursuant to Iowa Code section 714.16 and that meets the requirements of 641—14.7(714).

"Maximum contaminant level" or *"MCL,"* as used in these rules, means a maximum contaminant level, or an action level, or a treatment technique requirement established in lieu of a maximum contaminant level, as specified in the national primary drinking water regulations (40 CFR 141).

"NSF" means NSF International, 789 Dixboro Road, P.O. Box 130140, Ann Arbor, Michigan 48113-0140. NSF maintains performance and testing standards for water treatment systems.

"Performance indication device" or *"PID"* means an automatic, effective means to warn the user when a water treatment system requires service, typically after a fixed time or volume of water.

"Performance testing" means:

1. The third-party laboratory testing of a water treatment system in accordance with an approved performance testing protocol; or

2. The testing of a water treatment system by the manufacturer in accordance with an approved performance testing protocol followed by an audit of the manufacturer's performance testing facilities and data by a third-party testing agency.

"Seller" means the person offering a water treatment system for sale, lease, or rent.

"State hygienic laboratory" means the University Hygienic Laboratory, University of Iowa, Oakdale Campus, Iowa City, Iowa 52242.

"Surrogate" means a substance or parameter that is reduced in concentration by a water treatment system and for which the reduction has been shown to reliably represent the reduction in concentration of one or more contaminants.

"Third-party testing agency" means an independent laboratory that is approved by the department to conduct performance testing of water treatment systems or to conduct audits of manufacturers' performance testing facilities and data.

"Water treatment system" means a device or assembly for which a claim is made that it will improve the quality of public or private drinking water by reducing the concentration of one or more contaminants through mechanical, physical, chemical, or biological processes or a combination of processes. Each model of a water treatment system shall be deemed a distinct water treatment system.

1. Products that are given different model numbers by the manufacturer will be considered to be separate models unless the manufacturer can demonstrate that the products are identical.

2. Products that are similar but have different capacities, flow rates, or daily production rates will be considered to be separate models.

3. Products that are similar but make different contaminant reduction claims will be considered separate models.

4. Replacement components that are part of a registered water treatment system will not be considered separate models.

641—14.4(714) Performance testing. A water treatment system shall be tested for performance by a third-party testing agency or by the manufacturer. If the manufacturer does the performance testing, the provisions of 14.4(3) shall apply.

14.4(1) *Standards.* The performance testing shall be conducted in accordance with the applicable standard(s) from Table 1 or in accordance with a protocol approved by the state hygienic laboratory. Performance testing shall include an evaluation of structural integrity and of the water contact materials of the water treatment system in accordance with the applicable standard(s) listed in Table 1 or methods approved by the state hygienic laboratory.

Table 1

Treatment Process	NSF/ANSI Standard
Mechanical filtration	53[1]
Carbon adsorption/filtration	53[1]
Reverse osmosis	58[2]
Cation exchange softening	44[3]
Ion exchange except softening	53[1]
UV disinfection, Class A	55[4]
Distillation	62[5]

[1] Drinking Water Treatment Units-Health Effects, 2007
[2] Reverse Osmosis Drinking Water Systems, 2007
[3] Residential Cation Exchange Water Softeners, 2007
[4] Ultraviolet Microbiological Water Treatment Systems, 2007
[5] Drinking Water Distillation Systems, 2007

14.4(2) *Alternate performance testing protocols.* If a water treatment system is not tested in accordance with a standard(s) in Table 1, the manufacturer of the water treatment system shall submit an alternate performance testing protocol for the water treatment system to the department.

a. The submission shall include, but may not be limited to, the following information:

(1) The name and address of the manufacturer and the name, address, telephone number, and E-mail address of the manufacturer's representative.

(2) The brand name, model number, and trade names of each water treatment system requiring performance testing. The manufacturer shall state whether each water treatment system will be performance tested or if one water treatment system will be performance tested and the results used to represent the performance of other water treatment systems. The manufacturer shall provide justification that the performance testing of one water treatment system will reliably represent the performance of other water treatment systems.

(3) A detailed drawing with part numbers identifying each component of the water treatment system. Where applicable, this includes, but may not be limited to, pre- and post-filters, storage tank, dispensing unit (faucet), booster pump, and the main treatment module. Replaceable components shall be specifically identified and the approximate treatment capacity or replacement frequency shall be stated.

(4) Identification of the water treatment system materials that are in contact with the water and of any chemical added to the drinking water by the water treatment system.

(5) Specification of the pressure, flow and temperature requirements and limits for the water treatment system.

(6) A list of the contaminants claimed to be reduced by the water treatment system.

(7) A statement indicating whether the water treatment system will be advertised and sold to treat water that is microbiologically unsafe as defined in NSF/ANSI standard 53.

(8) A detailed description of the performance testing protocol including, but not necessarily limited to:

1. A schematic of the test rig with specifications for the critical components and instrumentation.
2. Characterization of the general test water and the challenge water, including the level of the challenge parameter(s) in the water. A justification for the level of the challenge parameter(s) shall be provided.
3. Details of how the general test water and the challenge water are prepared.
4. Water pressure, flow rate and temperature during the test.
5. Sample schedule for influent and effluent water.
6. Analytical methods for the challenge parameter(s).
7. Performance standard for the challenge parameter(s).

b. The performance testing protocol shall include the following provisions:

(1) At least two units shall be tested.

(2) The flow rate and water pressure shall be typical of the end use for the water treatment system.

(3) Where applicable, a water treatment system with a PID shall be tested to at least 120 percent of the capacity listed on the PDS. A water treatment system without a PID shall be tested to at least 200 percent of the capacity listed on the PDS.

(4) The structural integrity of the water treatment system shall be tested in accordance with the method in the applicable standard in Table 1.

(5) The materials shall be evaluated for safety in accordance with one of the standards in Table 1 or in accordance with NSF/ANSI standard 61-2007a, "Drinking Water System Components - Health Effects."

c. The state hygienic laboratory shall review the performance testing protocol and shall report the approval, conditional approval or disapproval of the protocol in writing to the department. The conditions of approval or the reasons for disapproval shall be in the report.

d. The manufacturer shall pay a fee not to exceed $200 to the state hygienic laboratory for each performance testing protocol review done in accordance with these rules.

14.4(3) *Manufacturer testing and audit.* A manufacturer may do performance testing of a water treatment system at its own facilities provided that a performance testing protocol from a standard in Table 1 or a performance testing protocol approved in accordance with 14.4(2) is used and the manufacturer's personnel, facilities and data are found to be adequate when audited by a third-party testing agency.

a. The manufacturer shall submit to the department information including, but not necessarily limited to, the following:

(1) The applicable standard(s) from Table 1 or the information required by 14.4(2).

(2) The name and address of the third-party testing agency performing the audit, and the name, address, telephone number, and E-mail address of an authorized representative of the third-party testing agency.

b. The third-party testing agency responsible for the audit of the manufacturer's facilities and data shall submit to the department information including, but not necessarily limited to, the following:

(1) A detailed description of the manufacturer's testing facilities and equipment.

(2) Résumés of the management, scientific, and technical personnel responsible for conducting the performance testing.

(3) A copy of the manufacturer's state drinking water laboratory certification for the contaminants treated by the water treatment system, or verification that the manufacturer has the capability to perform USEPA-approved analytical methods for the contaminants treated by the water treatment system. If the analyses are performed by another agency, a copy of that agency's certificate and documentation of the business relationship between the manufacturer and the agency shall be submitted.

(4) An evaluation of the manufacturer's laboratory quality assurance program.

(5) The number of water treatment systems tested at the manufacturer's testing facilities, if applicable, listed by the standard(s) used as the basis for testing and including the contaminants for which testing was done.

(6) An evaluation of the capability of the facility to conduct performance testing in accordance with the approved performance testing protocol.

c. Upon receipt of the report of the audit, the department shall transmit a letter of approval, conditional approval, or disapproval to the manufacturer within 30 days. The conditions of approval or the reasons for disapproval shall be in writing and shall be provided to the manufacturer's representative.

14.4(4) *Performance requirements.* A water treatment system shall meet or exceed the performance requirements of the standard(s) in Table 1 applicable to the water treatment system. If a contaminant treated by the water treatment system is not addressed by a standard in Table 1, the water treatment system shall reduce the level of the contaminant to or below the MCL when the water treatment system is tested in accordance with a performance testing protocol approved according to 14.4(2).

14.4(5) *Retesting.*

a. If a water treatment system is listed by an ANSI-accredited third-party testing agency, the manufacturer shall have the water treatment system retested for performance in accordance with the policies of the third-party testing agency, but no less frequently than every five years. Other water treatment systems shall be retested by a third-party testing agency at least every five years.

b. After a water treatment system is retested, the manufacturer shall submit the test data in accordance with 14.6(1). The manufacturer shall submit a PDS modified to include the results of the retesting at the time of the next annual registration.

c. A change in the capacity of the water treatment system or to the contaminant claims shall be reported in accordance with 14.6(3).

d. Water treatment systems registered prior to January 1, 2009, shall be retested, and the test data and PDS submitted prior to January 1, 2014.

641—14.5(714) Third-party testing agencies. The department shall review and approve the facilities and capabilities of an agency before the agency is authorized as a third-party testing agency for the purposes of these rules.

14.5(1) *Submission of information.* An agency applying for authorization as a third-party testing agency shall submit to the department information including, but not necessarily limited to, the following:

a. The name, address, telephone number, and E-mail address of the agency representative.

b. Verification that the agency is not owned, fully or partially, or managed by a company engaged in the manufacture or sales of water treatment systems.

c. A copy of the agency's laboratory certification under the Safe Drinking Water Act for the contaminants for which the agency will do performance testing (if the analyses are performed by another agency, a copy of that agency's certificate and documentation of the business relationship between the applicant and the agency shall be submitted); or

d. Written verification to the department that the agency has the capability to perform the USEPA-approved methods of analysis for the contaminants for which the agency will do performance testing.

e. A copy of the agency laboratory quality assurance plan.

f. A detailed description of the agency's testing facilities and equipment.

g. Résumés of the management, scientific, and technical personnel responsible for conducting the performance testing.

h. The number of water treatment systems tested by the agency, if applicable, listed by the standards used as the basis for testing and including the contaminants for which testing was done.

i. A copy of a test protocol that the agency has developed for a client or a copy of the report of the test of a water treatment system prepared for a client, if applicable.

j. A nonrefundable $200 review fee.

k. If product testing is subcontracted to another testing agency, the name of the agency and the name, address, telephone number, and E-mail address of an authorized representative of the agency; the standard(s) used; and the contaminant(s) tested by the agency.

l. An agency that is accredited by ANSI for product testing and certification in accordance with one or more of the standards in Table 1 shall submit the following:

(1) The information required in 14.5(1)*"a"* and *"b"* and the fee required in 14.5(1)*"j."*

(2) The ANSI certificate and scope of accreditation.

(3) The method by which the department can access information about a water treatment system tested and certified by the agency. The information shall include:

1. Manufacturer's name.
2. Model number of the water treatment system.
3. Replacement element(s) designation.
4. Rated capacity, if applicable.
5. Service flow rate, if applicable.
6. Daily production rate, if applicable.
7. List of the contaminants for which the water treatment system has been tested.

14.5(2) *Testing auditor.* An agency applying for authorization to audit a manufacturer's data and facilities shall submit to the department information including, but not necessarily limited to, the following:

a. The information and fee required by 14.5(1).

b. A written description of the agency's qualifications and experience in performing laboratory audits and laboratory analysis.

c. Written verification that USEPA or equivalent procedures for auditing quality control of laboratories are followed in performing an audit of a manufacturer's testing of a water treatment system.

14.5(3) *Approval of third-party testing agencies.* The department shall review the information submitted by an agency applying for third-party testing agency status.

a. The department shall consider:

(1) The independence of the agency ownership and management.

(2) The adequacy of the agency's facilities and equipment for water treatment system testing.

(3) The experience and training of the management, scientific, and technical staff directly responsible for testing water treatment systems.

(4) The adequacy of the equipment, facilities and personnel for analysis of the contaminants for which the agency will do performance testing.

(5) The adequacy of quality assurance systems at the testing facility.

b. The department shall transmit a letter of approval, conditional approval, or disapproval to the agency representative. The conditions of approval or the reasons for disapproval shall be in writing and shall be provided to the agency representative.

c. An appeal of disapproval or a condition of approval shall be submitted by the agency to the department by certified mail, return receipt requested, within 30 days of receipt of the department's letter. The address is Iowa Department of Public Health, Water Treatment System Registration, 321 E. 12th Street, Des Moines, Iowa 50319-0075. If no appeal is received within the 30 days, the disapproval or conditional approval becomes the department's final agency action. An appeal shall be forwarded to the department of inspections and appeals within 5 working days of its receipt. The department shall provide the information upon which the disapproval or conditional approval was based and any additional information provided by the agency to the department of inspections and appeals.

14.5(4) *Resubmission.* The department may require that an agency resubmit the information required in 14.5(1) and 14.5(2) if:

a. The testing facilities are relocated.

b. The corporate identity of the agency changes.

c. The agency has not tested a water treatment system submitted to the department for registration or has not audited a manufacturer for a period of three years or longer.

14.5(5) *Revocation of authorization.* The department may revoke authorization for an agency to be a third-party testing agency or a test auditor if:

a. The agency loses ANSI accreditation.

b. The agency submits false information in support of the registration of a product.

c. Information submitted to support authorization is found to be false.

d. The agency, in the judgment of the department, is incompetent to conduct or incapable of conducting testing in accordance with the standards in Table 1 or in accordance with approved protocols.

14.5(6) *Notice of revocation.* Notice of revocation shall be sent to the agency by restricted certified mail, return receipt requested, or by personal service. The agency shall have a right to appeal the revocation.

a. An appeal of a revocation shall be submitted by certified mail, return receipt requested, within 30 days of receipt of the department's notice. The appeal shall be sent to the Iowa Department of Public Health, Division of Environmental Health, Lucas State Office Building, 321 East 12th Street, Des Moines, Iowa 50319-0075. If such a request is made within the 30-day time period, the revocation shall be deemed to be suspended. Prior to or at the hearing, the department may rescind the revocation upon satisfaction that the reason for the revocation has been or will be removed. After the hearing, or upon default of the agency, the administrative law judge shall affirm, modify or set aside the revocation. If no appeal is submitted within 30 days, the revocation shall become the department's final agency action.

b. Upon receipt of an appeal that meets contested case status, the appeal shall be transmitted to the department of inspections and appeals within five working days of receipt pursuant to the rules adopted by that agency regarding the transmission of contested cases. The information upon which the revocation is based shall be provided to the department of inspections and appeals.

c. The hearing shall be conducted in accordance with 481—Chapter 10.

d. When the administrative law judge makes a proposed decision and order, it shall be served by restricted certified mail, return receipt requested, or delivered by personal service. The proposed decision and order then becomes the department's final agency action without further proceedings ten days after it is received by the agency unless an appeal to the director is taken as provided in paragraph *"e."*

e. Any appeal to the director of the department for review of the proposed decision and order of the administrative law judge shall be filed in writing and mailed to the director by certified mail, return

receipt requested, or delivered by personal service within ten days after the receipt of the administrative law judge's proposed decision and order by the aggrieved party. A copy of the appeal shall also be mailed to the administrative law judge. Any request for appeal shall state the reason for appeal.

f. Upon receipt of an appeal request, the administrative law judge shall prepare the record of the hearing for submission to the director. The record shall include the following:

(1) All pleadings, motions and rules.

(2) All evidence received or considered and all other submissions by recording or transcript.

(3) A statement of all matters officially noticed.

(4) All questions and offers of proof, objections, and rulings thereon.

(5) All proposed findings and exceptions.

(6) The proposed findings and order of the administrative law judge.

g. The decision and order of the director becomes the department's final agency action upon receipt by the agency and shall be delivered by restricted certified mail, return receipt requested.

h. It is not necessary to file an application for a rehearing to exhaust administrative remedies when appealing to the director or the district court as provided in Iowa Code section 17A.19. The agency may petition for judicial review pursuant to Iowa Code chapter 17A.

i. Any petition for judicial review of a decision and order shall be filed in the district court within 30 days after the decision and order becomes final. A copy of the notice of appeal shall be sent by certified mail, return receipt requested, or by personal service to the department at Iowa Department of Public Health, Division of Environmental Health, 321 East 12th Street, Des Moines, Iowa 50319-0075.

j. An agency that appeals a final department action to the district court shall pay the cost of the preparation of a transcript of the contested case hearing for the district court.

641—14.6(714) Registration. A water treatment system that has been performance tested in accordance with 14.4(714) and that meets the performance requirement of 14.4(4) may be registered with the department. A water treatment system shall be registered with the department before it is sold, leased or rented and before it is advertised for sale, lease or rent in Iowa.

14.6(1) *Initial registration.*

a. The manufacturer of a water treatment system or the manufacturer's authorized representative shall submit the following information to the department on forms supplied by the department:

(1) The name and address of the manufacturer and the name, address, telephone number, and E-mail address of the manufacturer's representative.

(2) The brand name, model number, and trade name(s) of the water treatment system.

(3) A detailed drawing with part numbers identifying each component of the water treatment system. Where applicable, this includes, but may not be limited to, pre- and post-filters, storage tank, dispensing unit (faucet), booster pump, and the main treatment module. Replaceable components shall be specifically identified and the approximate treatment capacity or replacement frequency shall be stated.

(4) Verification by a third-party testing agency that the water treatment system performed in accordance with 14.4(4) when tested with an approved performance testing protocol. If the third-party testing agency is ANSI-accredited and the water treatment system was tested in accordance with a standard(s) in Table 1, documentation of a listing by the ANSI-accredited agency is sufficient.

(5) The test data generated by the third-party testing agency. Submission of the test data is not required if the testing agency is an ANSI-accredited third-party testing agency and the water treatment system was tested for performance in accordance with a standard in Table 1.

(6) The PDS.

(7) Copies of the labels for the water treatment system and for any replaceable components.

(8) Copies of product packaging, product promotional materials, and sales training materials.

(9) A copy of installation and operation guides with identification of replaceable components and replacement frequencies, where applicable.

(10) A nonrefundable initial registration fee of $800 for each water treatment system.

b. A registration issued between July 1 and March 31, inclusive, shall expire on the next June 30. A registration issued between April 1 and June 30, inclusive, shall expire on June 30 of the year after the year in which the registration is issued.

14.6(2) *Annual registration.* Each calendar year on or before March 1, the department shall notify each manufacturer or the manufacturer's designated agent of the water treatment systems registered in Iowa and the requirement for renewal of the registration. For each water treatment system that a manufacturer wishes to continue to sell in Iowa, the manufacturer or the manufacturer's designated agent shall submit the following information to the department on or before May 31 of each calendar year.

a. Certification that there has been no change in the water treatment system's design since the system was tested during the initial registration process.

b. A copy of the current PDS.

(1) A statement that the PDS has not changed since the initial registration or the previous annual registration may be submitted in lieu of the PDS.

(2) Changes on the PDS must be explained and supported by third-party testing results. If the testing was done by an ANSI-accredited third-party testing agency in accordance with a standard(s) in Table 1, documentation of listing by the testing agency is sufficient.

c. A nonrefundable annual registration fee of $400 for each water treatment system.

d. If the annual registration information is sent after May 31, the manufacturer shall pay for each water treatment system a penalty of $50 per month or fraction thereof that the information is late to a maximum of $200 for each water treatment system.

14.6(3) *Changes to registration.*

a. Modifying one or more contaminant claims, capacity claims, or treatment components of a registered water treatment system without the written approval of the department shall void the registration.

b. The manufacturer shall apply to the department for approval of a change in contaminant claims or capacity claims for a water treatment system, or of changes to the treatment components. The application shall be on a form supplied by the department. The application shall include, but may not be limited to:

(1) The name and address of the manufacturer and the name, address, telephone number, and E-mail address of the manufacturer's representative.

(2) The brand name, model number, and trade name(s) of the water treatment system.

(3) A description of the changes in claims, capacity, or components.

(4) The third-party testing agency report and data supporting the change in contaminant claims or capacity, or showing equivalent performance for a new treatment component. If the third-party testing agency is ANSI-accredited, a copy of the listing for the water treatment system showing the changes in contaminant claims or capacity, or a statement of equivalent performance by the new treatment component(s) from the testing agency is sufficient.

(5) A revised PDS that meets the requirements of 14.7(2).

(6) Copies of labels, packaging and promotional material that have been revised to reflect the changed claims.

(7) A nonrefundable $100 fee for each water treatment system for which the registration is changed.

c. The manufacturer shall notify the department of any changes to the trade name(s) for a water treatment system. The notification shall include, but may not be limited to:

(1) The original model number(s) and trade name(s) of the water treatment system.

(2) The changed or added model number(s) and trade name(s) for the water treatment system.

(3) A statement that the treatment components and claims are the same between the original and the changed or added trade names.

(4) Copies of the PDS, labels, packaging, and promotional materials showing the changed or added trade name(s).

641—14.7(714) Label and manufacturer's performance data sheet. A label and a PDS shall be provided with a water treatment system to provide the consumer with information on the effectiveness of the water treatment system in reducing the concentration of contaminants from drinking water.

14.7(1) *Label.* Each water treatment system must bear a conspicuous and legible label stating, "IMPORTANT NOTICE - Read the manufacturer's performance data sheet."

14.7(2) *Manufacturer's performance data sheet.* A PDS for a water treatment system listed by an ANSI-accredited third-party testing agency and tested in accordance with a standard in Table 1 shall comply with the requirements of the applicable standard(s) in Table 1 and the policies of the third-party testing agency. The PDS for other water treatment systems shall include, but may not be limited to:

a. The name, address, and telephone number of the seller.

b. The name, brand, or trademark under which the water treatment system is sold, and its model number.

c. Performance and test data including, but not necessarily limited to:

(1) The list of contaminants found to be reduced by the water treatment system.

(2) The average test influent concentration level of each contaminant or surrogate.

(3) The average effluent concentration and the percentage reduction of each contaminant or surrogate.

(4) When the reduction of a contaminant is verified using a surrogate, the equivalent influent concentration, effluent concentration, and percent reduction for the contaminant.

(5) The MCL for each contaminant.

(6) The approximate capacity in gallons or the period of time during which the water treatment system is effective in reducing the concentration of contaminants based upon the contaminant influent concentrations used for the performance tests. The claimed volume capacity of a water treatment system shall be based upon the contaminant most likely to break through into the effluent during the test period.

(7) Where applicable, the flow rate, pressure, and temperature of the water during the performance tests.

d. Substances or parameters that are not contaminants as defined in 14.3(714) may be listed on the PDS, but the substances may not be referred to as contaminants.

e. The following information shall be on the PDS or in the owner's manual. If the information is in the owner's manual, there shall be a statement on the performance data sheet referring the buyer to the owner's manual.

(1) Installation instructions.

(2) Procedures and requirements necessary for the proper operation of the water treatment system including, but not limited to, electrical requirements; maximum and minimum pressure; flow rate; temperature limitations; maintenance requirements; and expected replacement frequencies.

(3) The seller's warranty.

641—14.8(714) Consumer information pamphlet. A consumer information pamphlet prepared by the department shall be given to the buyer by the seller along with the manufacturer's performance data sheet prior to the consummation of the sale of a water treatment system. The consumer information pamphlet may be printed in detail by the manufacturer.

641—14.9(714) Sales of water treatment systems. No water treatment system may be sold in Iowa unless it is first registered with the department.

14.9(1) Prior to the consummation of sale, the seller shall provide to the buyer:

a. The PDS.

b. A copy of the consumer information pamphlet.

14.9(2) Prior to the consummation of sale, the seller and the buyer shall sign and date a copy of the PDS. The seller shall retain the signed PDS on file at the seller's place of business for at least two years.

14.9(3) The seller shall make no false or deceptive claims or representations regarding the contaminant removal capability of a water treatment system.

14.9(4) The seller shall not make any representation or claim that a water treatment system is approved or endorsed by any agency of the state.

641—14.10(714) Treatment of records. Information submitted by a manufacturer to support registration of a water treatment system is subject to the provisions of 641—Chapter 175, Fair Information Practices and Public Records. A manufacturer may request that information submitted for the purposes of these rules be considered confidential by reference to the appropriate subsection of Iowa Code section 22.7.

641—14.11(714) Penalties. A seller of a water treatment system or unit violating any provision of these rules shall be subject to civil or criminal penalties pursuant to the authority of Iowa Code chapter 714.

These rules are intended to implement Iowa Code chapter 714.

[Filed 3/17/89, Notice 11/16/88—published 4/5/89, effective 5/10/89]
[Filed 11/12/08, Notice 9/24/08—published 12/3/08, effective 1/7/09]

CHAPTER 15
SWIMMING POOLS AND SPAS

641—15.1(135I) Applicability.

15.1(1) These rules apply to swimming pools, spas, wading pools, water slides, wave pools, spray pads, and bathhouses connected to swimming pools owned or operated by local or state government, or commercial interests or private entities including, but not limited to, public or private school corporations, hotels, motels, camps, apartments, condominiums, health clubs and country clubs. These rules do not apply to a residential swimming pool or spa that is permanently installed in a single-family dwelling, to a decorative fountain, or to a therapeutic swimming pool or spa which is under the direct supervision of qualified medical personnel.

15.1(2) These rules do not apply to a swimming pool or spa operated by a homeowners association representing 72 or fewer dwelling units if the association bylaws, which also apply to a rental agreement relative to any of the dwelling units, include an exemption from the requirements of this chapter, provide for inspection of the swimming pool or spa by an entity other than the department or a local inspection agency, and assume any liability associated with operation of the swimming pool and spa. The association shall notify the department in writing if the association bylaws are amended as above. The inspector designated by the association shall be a certified operator as defined in 15.3(1). A report of the inspection shall be filed with the association secretary and shall be available to any association member on request.

641—15.2(135I) Scope. These rules stipulate minimum safety and water quality requirements for the operation of swimming pools and spas; standards for construction; procedures for registration; qualifications for swimming pool and spa inspectors; qualifications for swimming pool and spa operators and lifeguards; and procedures for health departments to provide for the inspection of swimming pools and spas and enforcement of these rules. Swimming pools and spas which are in compliance with these rules must also comply with the requirements of any other applicable federal, state or local laws, rules or ordinances.

641—15.3(135I) Definitions and abbreviations.

15.3(1) *Definitions.*

"Air break" is a piping arrangement in which a drain from a fixture, appliance or device discharges indirectly into a fixture, receptacle, or interceptor at a point below the flood-level rim of the receptacle.

"Air gap" means the unobstructed vertical distance through the free atmosphere between the lowest opening from an inlet pipe and the flood-level rim of a receptacle or floor drain.

"Board of health" means a county, city, or district board of health.

"Body feed" means the continuous addition of controlled amounts of filtering aid during the operation of a diatomaceous earth filter to maintain a permeable filter cake. This is sometimes referred to as a "slurry feed."

"Certified operator" means a person who has:

1. Successfully completed the Certified Pool/Spa Operator® course sanctioned by NSPF, the Aquatic Facility Operator course sanctioned by NRPA, the Professional Pool & Spa Operator course sanctioned by the APSP, the Licensed Aquatic Facility Technician course sanctioned by the American Swimming Pool and Spa Association, or an equivalent course approved by the department; and
2. Been recertified as required by the sanctioning organization; and
3. Obtained the continuing education required by 15.11(2).

"Combined chlorine" means nitrogen-chlorine compounds formed by the reaction of a chlorine disinfectant chemical with ammonia and organic nitrogen compounds as measured with a DPD (diethyl-p-phenylene diamine) test kit or as measured by another method approved by the department. Another term for combined chlorine is "chloramines."

"Construction" means the installation of a new swimming pool facility. "Construction" includes modifications to an existing facility which change the total recirculated water volume or the total water surface area by 20 percent or more.

"Deck" means a walkway immediately adjacent to a swimming pool.

"Decorative fountain" means a basin equipped with water sprays or jets that does not serve primarily as a wading or swimming pool and whose drain is not directly connected to any type of suction device for removing or recirculating the water.

"Deep water" means those areas of a swimming pool where the water is more than five feet deep.

"Department" means the Iowa department of public health.

"Di-chlor" means sodium dichloro-s-triazinetrione dihydrate. Di-chlor is a form of chlorine that includes cyanuric acid in its formulation.

"Engineering plans" means plans and specifications certified in accordance with the rules of the engineering and land surveying examining board or the architectural examining board by an engineer or architect licensed to practice in the state of Iowa.

"Equalizer" means an arrangement including a pipe from an opening below the water level in a swimming pool or spa to the body of a skimmer and a normally closed valve at the skimmer body. The arrangement is designed to automatically prevent air from being drawn into the pump when the water level drops below the skimmer inlet. The equalizer opening in a swimming pool or spa is a fully submerged outlet.

"Facility" means a building, fenced enclosure, or lot where there is at least one swimming pool or spa subject to regulation under Iowa Code chapter 135I and these rules.

"Field fabricated," when applied to a sump or a cover/grate for a fully submerged outlet, means constructed on site with conventional building materials or of a size and shape different from readily available commercial sumps or cover/grates.

"Fill and drain wading pool" means a wading pool having no recirculation system.

"Filter" means a mechanical device for removing suspended particles from the swimming pool water and refers to the complete mechanism including all component parts.

"Flow rating," when applied to the cover/grate for a fully submerged outlet, means the maximum flow rate in gpm through the cover/grate that will not cause body or hair entrapment as determined by the test methods in the ASME standard.

"Fountain" means a water fountain that is not established primarily for swimming or wading, but where swimming or wading is allowed, and that has a drain which is connected to a mechanical suction device for removing or recirculating the water.

"Free chlorine" means the concentration of hypochlorous acid and hypochlorite ion in the swimming pool water as measured with a DPD (diethyl-p-phenylene diamine) test kit or as measured by another method approved by the department.

"Fully submerged outlet" means an outlet that is completely under water when the water is at the normal operating level.

"Gravity outlet" means an outlet that directly connects to a tank or other structure that is at atmospheric pressure. Water flows through a gravity outlet by the natural head of water over the outlet.

"Hose bib" means a fresh-water outlet that is threaded to permit the attachment of a garden hose.

"Hydrostatic relief valve" means a relief valve installed in the bottom of the swimming pool and designed to operate automatically when the swimming pool is empty, relieving the groundwater pressure around the structure by allowing the groundwater into the swimming pool tank.

"Inlet" means a fitting or opening through which recirculation water enters the swimming pool.

"Inspection agency" means the department, or a city, county or district board of health that has executed with the department pursuant to the authority of Iowa Code chapters 28E and 135I an agreement to inspect swimming pool/spa facilities and enforce these rules. The authority of a city, county or district board of health is limited to the geographic area defined in the agreement executed with the department. Within the defined geographic area, the city, county or district board of health is the "local inspection agency."

"Leisure river" means a closed-path channel of near constant depth with a river-like flow of water. A leisure river may include water features and play devices. Leisure rivers are also called "lazy rivers" or "slow rivers."

"Lifeguard."

1. "Certified lifeguard" means an individual who holds current certification in one of the following courses and, where applicable, current additional certification in American Red Cross first aid and American Red Cross or American Heart Association infant, child and adult CPR; two-person CPR, or equivalent first-aid and CPR certification approved by the department:

- American Red Cross Lifeguard Training
- YMCA Lifeguarding
- Boy Scouts of America Lifeguard

2. "Licensed lifeguard" means an individual who holds a current license from the National Pool and Waterpark Lifeguard Training Program in one of the following programs:

- National Pool and Waterpark Pool Lifeguard
- National Pool and Waterpark Lifeguard Training
- National Pool and Waterpark Deep Water Lifeguard

NOTE: Lifeguard, CPR and first-aid training programs will sometimes be renamed or restructured by the sponsoring organization. American Red Cross lifeguard training now includes first aid and CPR; the lifeguard receives the lifeguard certificate and a CPR certificate. Separate CPR and first-aid training is available from the American Red Cross, the American Heart Association, and other providers. If there is a question whether a specific training course will meet the requirements of these rules, information about the course should be submitted to the department for evaluation.

"Main drain" means the outlet(s) at the deepest part of a swimming pool or spa.

"Manufacturer's specifications" means written guidelines established by a manufacturer for the installation and operation of the manufacturer's equipment.

"Multisection water recreation pool" means a swimming pool with three or more distinct use areas such as, but not limited to, a zero-depth play area, a water slide landing area, a lap swim area, and a diving area.

"Outlet" means a fitting or opening, including the main drain, through which water leaves the swimming pool or spa.

"Outlet system" means an arrangement of components associated with one or more connected fully submerged outlets including the cover/grate(s), the sump(s), the piping, and the pump(s) if one or more pumps are directly connected to the outlet(s).

"Perimeter overflow gutter" means a weir and trough around the perimeter of a swimming pool that is used to skim the surface of the water and return the water to the treatment system.

"Plunge pool" means a pool designed to serve as a landing area for a water slide.

"Recirculation system" means the pump(s), piping, inlets, outlets, filtration system, chemical feed systems and accessories provided to convey and treat the swimming pool or spa water to meet the water quality standards in these rules.

"Reconstruction" means the replacement or modification of a swimming pool or spa shell or deck, a swimming pool or spa recirculation system, a perimeter overflow gutter or skimmer, or a bathhouse associated with a public swimming pool or spa. "Reconstruction" does not include the replacement of equipment or piping previously approved by the department, provided that the type and size of the equipment are not revised, nor does it include normal maintenance or repair.

"Residential swimming pool" means any swimming pool that is used, or intended to be used, in connection with a single-family residence and that is available only to the family of the householder and the householder's private guests. A residential swimming pool used for any commercial purpose, including, but not limited to, swimming lessons or exercise classes, shall comply with the requirements of 15.4(6)*"n."* A residential swimming pool used for commercial purposes for more than 60 hours in a calendar month shall be considered a public swimming pool.

"Shallow water" means those areas of a swimming pool where the water is 5 ft deep or less.

"Shallow water guard."

1. "Certified shallow water guard" means a person who has current certification in American Red Cross basic water rescue, current certification in American Red Cross first aid, and current certification in American Red Cross or American Heart Association infant, child and adult CPR, or equivalent training approved by the department.

2. "Licensed shallow water guard" means a person who holds a current license from the National Pool and Waterpark Lifeguard Training Program as a National Pool and Waterpark Shallow Water Waterpark Lifeguard.

NOTE: Water safety, CPR and first-aid training programs will sometimes be renamed or restructured by the sponsoring organization. If there is a question whether a specific training course will meet the requirements of these rules, information about the course should be submitted to the department for evaluation.

"Skimmer" means a manufactured device designed to be directly connected to the recirculation pump suction and used to skim the swimming pool over a self-adjusting weir.

"Spa" means a structure, chamber, or tank, such as a hot tub or whirlpool, that is designed for recreational or therapeutic use and is designed not to be drained, cleaned, and refilled after each individual use. A spa is designed to provide a means of agitation. A swimming pool with a bench equipped with agitation is not considered a spa provided that the bench length is no more than 10 percent of the swimming pool perimeter and that the water temperature is maintained at 90°F or less. Rules 641—15.51(135I) and 641—15.52(135I) define minimum standards for the operation and design of spas.

"Speed slide" means a water slide which is designed to enter users into a plunge pool or other deceleration arrangement at a speed of 30 ft per second or more.

"Spray pad" means a constructed area equipped with water sprays or other water play features where the water is intended to contact the users. A spray pad includes no standing water. A spray pad uses water that is recirculated independently or from an associated swimming pool. Spray pads are also called "wet decks," "splash pads," "interactive play attractions," "water recreation attractions," and other names.

A play area with sprays or other features that includes no standing water and that uses only potable water that is not circulated (the water drains to waste) is not included in this definition.

"Suction outlet" means an outlet that is directly connected to the inlet side of a circulation pump.

"Superchlorination" means the addition of a chlorine disinfectant compound to a swimming pool or spa to a concentration at least ten times the combined chlorine concentration before the addition. Treatment of swimming pool or spa water with nonchlorine chemicals to eliminate or suppress combined chlorine is not superchlorination.

"Swimming pool" means a structure, chamber, tank, or area constructed of man-made material through which water is circulated and that is designed and operated for recreation, training, or competition that includes full body contact with the water. This definition includes, but may not be limited to, swimming pools, wading pools, spray pads, leisure rivers, water slides, and wave pools. The swimming pool may be either publicly or privately owned. This definition includes, but is not limited to, swimming pools operated by cities, counties, public and private schools, hotels, motels, camps, apartments, condominiums, and health clubs and country clubs.

1. "Class A swimming pool" means a swimming pool with a water surface area of 1500 ft^2 or more, except for wading pools.

2. "Class B swimming pool" means a swimming pool with a water surface area of less than 1500 ft^2.

"Swimming pool slide" means any device used to enter a swimming pool by sliding down an inclined plane or through a tube. "Swimming pool slide" as used in this chapter is equipment generally similar to a playground slide. A swimming pool slide shall have a slide path of 20 ft or less in length and a water flow down the slide of 20 gpm or less. A slide exceeding either of these criteria shall be a water slide.

"Temporary spa" means a spa which is installed or situated in one location for a period of less than 30 days.

"Total bromine" means the concentration of hypobromous acid, hypobromite ion and nitrogen-bromine compounds in the swimming pool water as measured with a DPD (diethyl-p-phenylene diamine) test kit or as measured by another method approved by the department.

"Tri-chlor" means trichloro-s-triazinetrione. Tri-chlor is a form of chlorine that includes cyanuric acid in its formulation.

"Unblockable," when applied to a cover/grate for a fully submerged outlet, means a size and shape that cannot be fully covered by an 18-inch by 23-inch mat with 4-inch-diameter rounded corners and the differential pressure generated by the flow through the uncovered open area is not enough to cause body entrapment. "Unblockable" is evaluated by the methods specified in the ASME standard.

"Wading pool" means a swimming pool that is no more than 24 inches deep at any point and that is primarily intended for use by young children for general recreation or training.

"Water slide" means a recreational ride which is a sloped trough-like or tubular structure using water as a lubricant and as a method of regulating rider velocity and which terminates in a plunge pool, swimming pool, or in a specially designed deceleration structure. "Water slide" includes appurtenant structures and devices, such as a plunge pool, pump reservoir, recirculation equipment, flume pumps, and access structures, when they are provided.

"Wave pool" means a swimming pool of special shape and design which is provided with wave-generating equipment.

"Zero-depth pool" means a swimming pool in which the pool floor intersects the water surface along at least one side of the pool. This definition does not include wading pools.

15.3(2) *Abbreviations.*

"AFO" means aquatic facility operator.

"AGA" means American Gas Association, 400 N. Capitol Street, NW, Washington, DC 20001.

"ANSI" means American National Standards Institute, 25 West 43rd Street, New York, NY 10036.

"APSP" means the Association of Pool & Spa Professionals (formerly National Spa and Pool Institute (NSPI)), 2111 Eisenhower Avenue, Alexandria, Virginia 22314.

"ASME" means American Society of Mechanical Engineers, Three Park Avenue, New York, NY 10016-5990.

"ASME standard" means ASME/ANSI A112.19.8a-2008, "Suction Fittings for Use in Swimming Pools, Wading Pools, Spas, and Hot Tubs." The standard sets performance requirements and test methods for pool and spa fittings, covers and grates for physical strength, ultraviolet light resistance, and hair and body entrapment prevention. The standard can be purchased from ANSI by calling (212)642-4980 or at http://webstore.ansi.org/.

"AWWA" means American Water Works Association, 6666 West Quincy Avenue, Denver, CO 80235.

"BTU" means British thermal unit.

"CPO®" means certified swimming pool/spa operator.

"CPR" means cardiopulmonary resuscitation.

"feet" means feet of water (feet × 0.43 = psi) when used in discussing pump requirements.

"ft" means foot or feet (distance).

"ft^2" means square foot or square feet.

"gal" means gallon(s).

"gpm" means gal per minute.

"in Hg" means inches of mercury (in Hg × 0.49 = psi).

"in^2" means square inch(es).

"LAFT" means licensed aquatic facility technician.

"mg/L" means milligram(s) per liter.

"mV" means millivolts.

"NRPA" means National Recreation and Park Association, 22377 Belmont Ridge Road, Ashburn, VA 20148.

"NSF" means NSF International (formerly National Sanitation Foundation), 789 N. Dixboro Road, P.O. Box 130140, Ann Arbor, MI 48113-0140.

"NSPF®" means National Swimming Pool Foundation, 4775 Granby Circle, Colorado Springs, CO 80919.

"ORP" means oxidation-reduction potential.

"ppm" means parts per million; mg/L and ppm are equivalent terms.

"PPSO" means professional pool and spa operator.

"psi" means pounds per square inch.

"sec" means second (time).

"Standard 50" means NSF/ANSI Standard 50, "Circulation System Components for Swimming Pools, Spas, or Hot Tubs."

"TDH" means total dynamic head.

"UL" means Underwriters Laboratories, 333 Pfingsten Road, Northbrook, IL 60062-2096.

[**ARC 7839B**, IAB 6/3/09, effective 7/8/09]

SWIMMING POOLS

641—15.4(135I) Swimming pool operations. Swimming pools shall be operated in a safe, sanitary manner and shall meet the following operational standards.

15.4(1) *Filtration and recirculation.*

a. Filtration. A swimming pool, except a fill and drain wading pool, shall have a filtration system in good working condition which provides water clarity in compliance with the water quality standards of 15.4(2).

b. Recirculation. The recirculation system of a swimming pool shall meet the following requirements:

(1) During the operating season, pumps, filters, disinfectant feeders, flow indicators, gauges, and all related components of the swimming pool water recirculation system shall be operated continuously except for backwashing or servicing.

(2) The recirculation system shall have an operating pressure gauge located in front of the filter if it is a pressure filter system. A vacuum filter system shall have a vacuum gauge located between the filter and the pump.

(3) The recirculation system shall have inlets adequate in design, number, location, and spacing to ensure effective distribution of treated water and maintenance of uniform disinfectant residual throughout the swimming pool.

(4) Swimming pools shall have a means for skimming the pool water surface.

1. Each skimmer shall have an easily removable basket or screen upstream from any valve. Self-adjusting weirs shall be in place to provide skimming action.

2. Gutter or skimmer drainage shall be sufficient to minimize flooding and prevent backflow of skimmed water into the swimming pool.

c. Wastewater. Backwash water from a swimming pool shall be discharged through an air break or an air gap.

d. Water supply. The water supplied to a swimming pool shall be from a water supply meeting the requirements of the department of natural resources for potable water.

(1) Water supplied to a swimming pool shall be discharged to the pool system through an air gap or a reduced-pressure principle backflow device meeting AWWA C-511-97, "Reduced-Pressure Principle Backflow-Prevention Assembly."

(2) Each hose bib at a facility shall be equipped with an atmospheric vacuum breaker or a hose connection backflow preventer.

e. Swimming pool water heaters.

(1) Electric water heaters shall bear the seal of UL.

(2) Gas-fired water heaters shall bear the seal of the AGA and shall be equipped with a pressure relief valve.

(3) Fuel-burning water heaters shall be vented to the outside in accordance with the Iowa state plumbing code.

(4) Each indoor swimming pool equipment room with fuel-burning water heating equipment shall have one or more openings to the outside of the room for the provision of combustion air.

f. *Fill and drain wading pools.* Each fill and drain wading pool shall be drained at least once every 12 hours and left empty when the pool is not open for use.

15.4(2) *Water quality and testing.*

a. *Disinfection.*

(1) Swimming pool water shall have a free chlorine residual of at least 1.0 ppm and no greater than 8.0 ppm, or a total bromine residual of at least 2.0 ppm and no greater than 18 ppm when the swimming pool is open for use, except as given in Table 1.

(2) The swimming pool shall be closed if the free chlorine is measured to be less than 0.6 ppm or the total bromine is measured to be less than 1.0 ppm.

(3) The swimming pool shall be closed if a free chlorine measurement exceeds 8.0 ppm or if the total bromine measurement exceeds 18 ppm, except as given in Table 1.

(4) If an ORP controller with a readout meeting the requirements of 15.4(2)*"f"*(4) is installed on the swimming pool system, the swimming pool water shall have an ORP of at least 700 mV, but no greater than 880 mV, except as given in Table 1. The swimming pool shall be closed if the ORP is less than 650 mV or greater than 880 mV.

(5) The swimming pool shall be closed if the cyanuric acid concentration in the swimming pool water exceeds 80 ppm. The swimming pool may be reopened when the cyanuric acid concentration is 40 ppm or less.

(6) No cyanuric acid shall be added to an indoor swimming pool after May 4, 2005, except through an existing chemical feed system designed to deliver di-chlor or tri-chlor. No cyanuric acid in any form shall be added to an indoor swimming pool after May 31, 2008.

Table 1

Preferred Operating Range			Acceptable Operating Range		
ORP (mV)	Free Cl (ppm)	Total Br (ppm)	ORP (mV)	Free Cl (ppm)	Total Br (ppm)
700-880	1.0-8.0	2.0-18.0	700-880	0.50-0.90	1.0-2.0
			650-700[#]	1.0-8.0	2.0-18.0
			650-700[†]	8.2-10.0	18.5-22.0

[#] If these conditions occur on any 5 consecutive days or on any 10 days within a 14-day period, the facility management shall evaluate water parameters including, but not limited to, cyanuric acid, pH, combined chlorine, and phosphates (ortho- and total); and other conditions at the swimming pool. The facility management shall modify parameters and conditions as practical to bring the ORP to a minimum of 700 mV. The evaluation shall be completed within 30 days after the low ORP condition is known to the facility management. A written report of the evaluation shall be kept with the pool records.

[†] If these conditions occur on any 3 consecutive days or on any 7 days within a 14-day period, the facility management shall notify the local inspection agency and shall cause the conditions at the swimming pool specified in the previous footnote and the function of the ORP equipment to be investigated by a professional pool service company. A written report detailing source water parameters, pool water parameters, pool design (including information about the installed mechanical and chemical equipment), other conditions affecting the disinfectant concentration and the ORP, and the actions taken to increase ORP relative to the disinfectant residual shall be submitted to the local inspection agency within 30 days after the low ORP condition is known to the facility management.

b. *pH level.* The pH of swimming pool water shall be 7.2 to 7.8. An inspection agency may require that a swimming pool be closed if the pH is less than 6.8 or greater than 8.2.

c. *Water clarity.* A swimming pool that is less than 8 ft deep shall be closed if the grate openings on the main drain are not clearly visible from the deck. A swimming pool that is 8 ft deep or deeper shall be closed if the main drain is not clearly visible from the deck.

d. *Bacteria detection.*

(1) If coliform bacteria are detected in a sample taken in accordance with 15.4(2)*"e"*(6), the swimming pool shall be superchlorinated and a check sample shall be taken when the disinfectant residual is within the requirements of paragraph *"a"* above. If coliform bacteria are detected in the check sample, the swimming pool shall be closed. The swimming pool may reopen when no

coliform bacteria are detected in a swimming pool water sample taken when the pool water meets the requirements of paragraphs *"a," "b"* and *"c"* above.

(2) The facility management shall notify the local inspection agency of the positive bacteriological result within one business day after the facility management has become aware of the result.

e. Test frequency. The results of the tests required below shall be recorded in the swimming pool records.

(1) The disinfectant residual in the swimming pool water shall be tested or the ORP of the swimming pool water shall be checked each day within one-half hour of the swimming pool opening time and at intervals not to exceed four hours thereafter until the swimming pool closing time. For swimming pools at condominiums, apartments or homeowners associations with 25 or fewer living units, testing must be performed at least once each day that the swimming pool is available for use.

If the swimming pool is equipped with an automatic controller with a readout or local printout of ORP meeting the requirements of 15.4(2)*"f"*(4), the operator may make visual readings of ORP in lieu of manual testing, but the swimming pool water shall be tested manually for disinfectant residual at least twice per day. Both ORP and disinfectant residual shall be recorded when manual testing is done. The operator shall specify in the swimming pool records which results are from the manual tests.

(2) The pH of the swimming pool water shall be tested each day within one-half hour of the swimming pool opening time and at intervals not to exceed four hours thereafter until the swimming pool closing time. For swimming pools at condominiums, apartments or homeowners associations with 25 or fewer living units, testing for pH must be performed at least once each day that the swimming pool is available for use.

If the swimming pool is equipped with an automatic controller with a readout or local printout of pH meeting the requirements of 15.4(2)*"f"*(5), the operator may make visual readings of pH in lieu of manual testing, but the swimming pool water shall be tested manually for pH at least twice per day. The operator shall specify in the swimming pool records which results are from the manual tests.

(3) The swimming pool water shall be tested for total alkalinity at least once in each week that the swimming pool is open for use. The swimming pool shall be tested for calcium hardness at least once in each month that the swimming pool is open for use.

(4) If a chlorine chemical is used for disinfection, the swimming pool water shall be tested for combined chlorine at least once in each week that the swimming pool is open for use.

(5) If cyanuric acid or a stabilized chlorine is used at a swimming pool, the swimming pool water shall be tested for cyanuric acid at least once in each week that the swimming pool is open for use.

(6) At least once in each month that a swimming pool is open for use, the facility management shall submit a sample of the swimming pool water to a laboratory certified by the department of natural resources for the determination of coliform bacteria in drinking water. The sample shall be analyzed for total coliform.

f. Test equipment.

(1) Each facility shall have functional water testing equipment for free chlorine and combined chlorine, or total bromine; pH; total alkalinity; calcium hardness; and cyanuric acid (if cyanuric acid or a stabilized chlorine is used at the facility).

(2) The test equipment shall provide for the direct measurement of free chlorine and combined chlorine from 0 to 10 ppm in increments of 0.2 ppm or less over the full range, or total bromine from 0 to 20 ppm in increments of 0.5 ppm or less over the full range.

(3) The test equipment shall provide for the measurement of swimming pool water pH from 7.0 to 8.0 with at least five increments in that range.

(4) A controller readout used in lieu of manual disinfectant residual testing shall be a numerical analog or digital display (indicator lights are not acceptable) with an ORP scale with a range of at least 600 to 900 mV with increments of 20 mV or less.

(5) A controller readout used in lieu of manual pH testing shall be a numerical analog or digital display (indicator lights are not acceptable) with a pH range at least equal to the range required in 15.4(2)*"f"*(3) with increments of 0.2 or less over the full range.

g. Operator availability. A person knowledgeable in testing water and in operating the water treatment equipment shall be available whenever a swimming pool is open for use.

15.4(3) *Chemical feed equipment and cleaning.*

a. Chemical feed equipment.

(1) Equipment for continuous feed of chlorine, a chlorine compound or a bromine compound to the swimming pool water shall be provided and shall be operational. The equipment shall be adjustable in at least five increments over its feed capacity. Where applicable, the chemical feeder shall be listed by NSF or another listing agency approved by the department for compliance with Standard 50.

(2) Equipment for the continuous feed of a chemical for pH adjustment of the swimming pool water shall be provided and shall be operational for each Class A swimming pool and for each swimming pool constructed after July 1, 1998. Where applicable, the chemical feeder shall be listed by NSF or another listing agency approved by the department for compliance with Standard 50.

b. Cleaning.

(1) The inspection agency may require that a swimming pool be drained and scrubbed with a disinfecting agent prior to further usage.

(2) A vacuum system shall be provided to remove dirt from the bottom of the swimming pool.

15.4(4) *Safety.*

a. Chemical safety.

(1) No disinfectant chemical, pH control chemical, algaecide, shock treatment chemical, or any other chemical that is toxic or irritating to humans may be added to the swimming pool water from the deck of the swimming pool while the swimming pool is in use. When chemical additions are made from the deck, the swimming pool shall be closed from use for at least one-half hour. The operator shall test the swimming pool water as appropriate before allowing use of the swimming pool. The chemical addition and the test results shall be recorded in the swimming pool records.

(2) Swimming pool treatment chemicals shall be stored and handled in accordance with the manufacturer's recommendations.

(3) Material safety data sheets (MSDS) for the chemicals used at the pool shall be at the facility in a location known and readily accessible to the facility staff.

(4) Chemical storage containers shall be clearly labeled.

(5) A chemical hazard warning sign shall be placed at the entrance of a room where chemicals are used or stored or where bulk containers are located.

b. Stairs, ladders, recessed steps, and ramps.

(1) Ladders or recessed steps shall be provided in the deep portion of a swimming pool. Stairs, ladders, recessed steps, or ramps shall be provided in the shallow portion if the vertical distance from the bottom of the swimming pool to the deck is more than 2 ft.

(2) Ladders, ladder rungs and ramps shall be securely anchored.

(3) The distance between the swimming pool wall to the vertical rail of a ladder shall be no greater than 6 inches and no less than 3 inches. The lower end of each ladder rail shall be securely covered with a smooth nonmetallic cap. The lower end of each ladder rail shall be within 1 inch of the swimming pool wall.

Figure 1

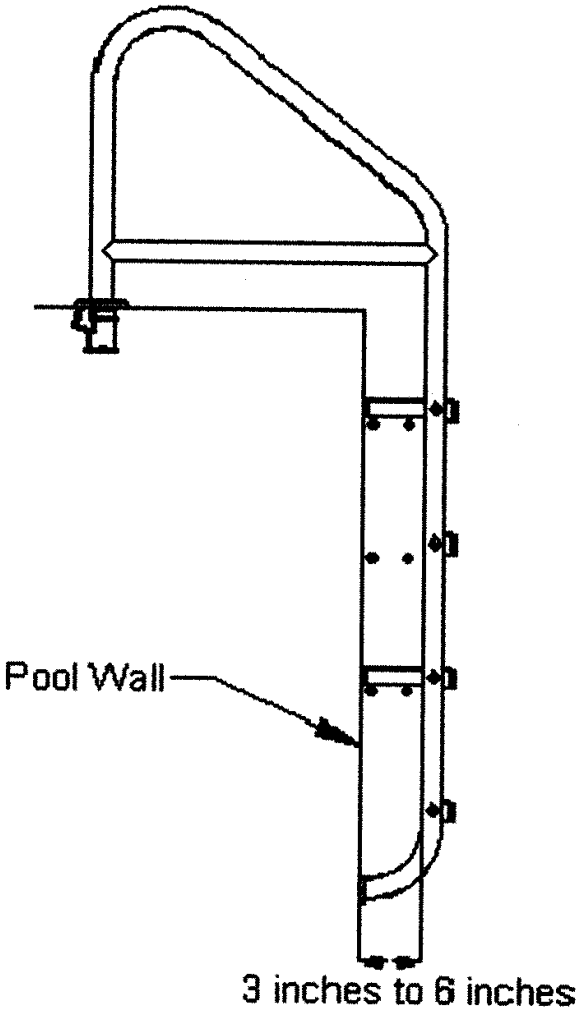

(4) Stairs, ladder rungs, ramps and recessed steps shall be slip-resistant.

(5) If a swimming pool is over 30 ft wide, recessed steps, ladders, ramps, or stairs shall be installed on each side. If a stairway centered on the shallow end wall of the swimming pool is within 30 ft of each side of the swimming pool, that end of the swimming pool shall be considered in compliance with this subparagraph.

(6) Each set of recessed steps shall be equipped with a securely anchored grab rail on each side of the recessed steps.

(7) Each set of stairs and each ramp shall be equipped with a securely anchored handrail(s).

(8) When stairs are provided for entry into a swimming pool, a stripe at least 1 inch wide of a color contrasting with the step surface and with the swimming pool floor shall be marked at the top front edge of each tread. The stripe shall be slip-resistant.

c. Diving areas.

(1) No diving shall be permitted in areas where the water is 5 ft deep or less except for purposes of competition or training. The diving shall be supervised by a lifeguard, swim instructor or swim coach.

(2) Starting blocks shall only be used for competition or training purposes under the supervision of a lifeguard, swim instructor, or swim coach. Starting blocks and starting block installation shall meet the requirements of the competition governing body (National Collegiate Athletic Association, USA Swimming, or National Federation of State High School Associations). When the swimming pool is

open for general use, the starting blocks shall be secured from use by removal, covering, or signage and active supervision.

(3) Diving boards shall be permitted only if the diving area dimensions conform to the minimum requirements indicated in Figure 2, Table 2 and Table 3. Alternative diving well configurations may be used, subject to the approval of the department.

(4) There shall be a completely unobstructed clear distance of 13 ft above the diving board, measured from the center of the front end of the board. This area shall extend at least 8 ft behind, 8 ft to each side, and 16 ft ahead of the measuring point.

(5) Diving boards and platforms over 3 meters in height are prohibited except where approved by the department.

(6) Diving boards and platforms shall have a slip-resistent surface.

(7) Where the top of a diving board or platform is more than 18 inches above the deck, stairs or a ladder shall be provided for access to the diving board or platform.

(8) Handrails shall be provided at all steps and ladders leading to diving boards which are more than 32 inches above the deck.

(9) A platform or diving board that is 32 inches or more above the swimming pool deck shall have a guardrail on both sides. The guardrails shall be at least 36 inches high and shall extent to the edge of the deck. The guardrails shall have at least one horizontal mid-bar.

(10) Supports, platforms, and steps for diving boards shall be of substantial construction and of sufficient structural strength to safely carry the maximum anticipated load.

NOTE: The information contained in Figure 2 and Tables 2 and 3 is for swimming pools constructed prior to March 14, 1990. Swimming pools constructed after March 14, 1990, shall meet the requirements contained in 15.5(13)*"a."*

When determining distances set out in Tables 2 and 3, measurements shall be taken from the top center of the front edge of the diving board. The reference water level shall be the midpoint of the skimmer opening for a skimmer pool or a stainless steel gutter system with surge weirs. The reference water level for a gutter pool shall be the top of the gutter weir.

Figure 2

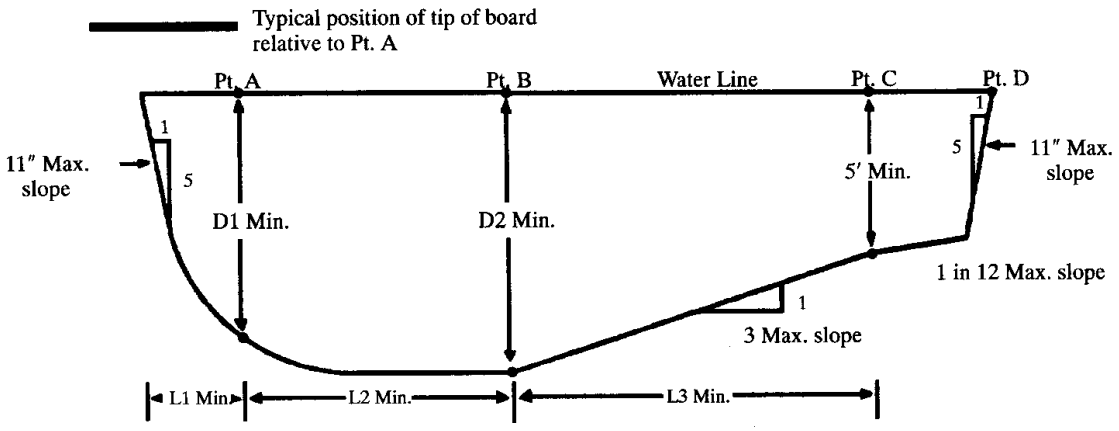

Table 2

		Minimum Dimensions				
Diving Board Height Above Water	Maximum Diving Board Length	D1	D2	L1	L2	L3
Deck level to 2/3 meter	10 ft	7 ft	8.5 ft	2.5 ft	8 ft	10.5 ft
Greater than 2/3 meter to 3/4 meter	12 ft	7.5 ft	9 ft	3 ft	9 ft	12 ft
Greater than 3/4 meter to 1 meter	16 ft	8.5 ft	10 ft	4 ft	10 ft	15 ft
Greater than 1 meter to 3 meters	16 ft	11 ft	12 ft	6 ft	10.5 ft	21 ft

Table 3

	Minimum Distance		
Diving Board Height Above Water	To Pool Side	To 1-Meter Diving Board	To 3-Meter Diving Board
Deck level to 1 meter	9 ft	8 ft	10 ft
Greater than 1 meter	11 ft	10 ft	10 ft

d. Lifeguards and shallow water guards.

(1) Except for wading pools and spray pads, lifeguards are required at municipal and school swimming pools of any size and other swimming pools having a water surface area of 1500 ft^2 or larger. Swimming pools operated by apartments, condominiums, country clubs, neighborhoods, manufactured home communities, or mobile home parks are exempt from lifeguard requirements.

(2) Shallow water guards may be used at plunge pools which are 5 ft deep or less and at wading pools.

(3) For open recreation swimming, there shall be at least one lifeguard guarding the pool at all times for up to 30 swimmers in the water; for over 30 swimmers in the water, there shall be at least two lifeguards on duty, one of whom shall be guarding the pool at all times for up to 125 swimmers in the water. An additional lifeguard shall be provided for each additional 125 swimmers in the water or fraction thereof.

NOTE: This is the minimum lifeguard coverage acceptable under these rules. It is the responsibility of the management of each facility to evaluate the facility configuration, the features of the facility, including water slides, spray pads, play features, etc., the patrons, and the type of use, and to determine the facility-specific requirements for supervision by lifeguards.

(4) For a structured swimming program, such as lap swim, competitive swimming, water exercise classes, swim lessons and physical education classes, a lifeguard is not required provided the program is supervised by an instructor, teacher, or coach who is a lifeguard or who has current certification from the American Red Cross in basic water rescue, first aid, and infant, child and adult CPR, or equivalent training approved by the department. An instructor, teacher or coach may be responsible for a maximum of 30 persons within a structured activity. If more than 30 persons are involved in a structured activity, a second qualified supervisor must be present.

(5) Water slide attendants. Each water slide shall have a minimum of two attendants, one stationed at the top of the slide and one at the bottom of the slide. If the plunge pool is shallow, the water slide attendants shall be either lifeguards or shallow water guards. If the plunge pool includes deep water, the water slide attendants shall be lifeguards. Where the water slide attendant stationed at the bottom of a slide which empties into a swimming pool is a shallow water guard, the attendant shall only be responsible for guarding the water slide landing area.

The department may approve alternate water slide management based on a review of the slide and swimming pool configuration. Alternate water slide management plans shall be in writing and shall be at the facility during the operating season.

If two or three water slides start at the same platform and the distance between the centerlines of any two start structures is 10 ft or less, one attendant may supervise the slides. If two or three water slides terminate within the same landing area, one attendant may supervise the landing area.

e. Lifeguard chairs. For outdoor swimming pools where lifeguards are required by rule, at least one elevated lifeguard chair or station shall be provided for a swimming pool with a water surface area of 2000 to 4000 ft^2 inclusive; at least two chairs shall be provided if the area is 4001 to 6000 ft^2; and at least three chairs shall be provided if the area is 6001 ft^2 or more. Swimming pools are not required to have more than three lifeguard chairs or stations. This requirement does not apply to wave pools, leisure rivers, spray pads, or wading pools.

f. Emergency equipment and facilities.

(1) Except for wading pools, a minimum of one unit of lifesaving equipment shall be provided for each 1500 ft^2 of water surface area or fraction thereof. The area of a swimming pool where the water is 2 ft deep or less may be subtracted from the total area for this requirement. A swimming pool is not required to have more than ten units of lifesaving equipment.

(2) A unit of lifesaving equipment consists of one of the following:

1. A U.S. Coast Guard-recognized ring buoy fitted with a ¼-inch diameter line with a length of at least one-half the width of the pool, but no more than 60 ft; or
2. A life pole, or a "shepherd's crook" of at least 8 ft in length, and having blunted ends; or
3. A rescue buoy made of lightweight, hard, buoyant plastic with molded handgrips along each side and provided with a 4- to 6-ft tow rope and shoulder strap; or
4. A rescue tube made of a soft, strong foam material 3 inches by 6 inches by 40 inches with a molded strap providing a ring at one end and a hook at the other. Attached to the end with the ring shall be a 6-ft-long towline with a shoulder strap; or
5. Any other piece of rescue equipment approved by the department.

NOTE: Rescue equipment identified in 15.4(4)*"f"*(2)"3" and 15.4(4)*"f"*(2)"4" above shall be used only at swimming pools where lifeguards are employed. If a facility employs lifeguards (whether required by rule or not), the lifeguards shall be provided with the minimum equipment required by their training including, but not necessarily limited to, rescue tubes and personal CPR masks.

(3) Lifesaving equipment shall be mounted in conspicuous places around the swimming pool deck during normal operations.

(4) A swimming pool facility shall have a first-aid kit which contains, at a minimum, the following:

1. Band-Aids.
2. Sterile 4″ × 4″ bandage compress.
3. Self-adhering gauze bandage.
4. Disposable gloves.
5. Chemical cold compress.

Where lifeguards are not provided, the first-aid kit shall be prominently mounted in the swimming pool enclosure, or a sign stating its location shall be posted near the swimming pool. The first-aid kit shall be accessible when the swimming pool is open.

(5) A standard spine board with straps and a head immobilizer shall be provided at each swimming pool where lifeguards are required by rule.

(6) Except for wading pools and spray pads, each swimming pool where lifeguards are not provided shall have a designated emergency telephone or equivalent emergency communication system that can be operated without coins. The communication system shall be available to users of swimming pools when the swimming pool is open. When the telephone is not within the confines of the swimming pool enclosure, the location of the emergency telephone shall be posted in at least one conspicuous place within the swimming pool enclosure. Instructions for emergency use of the telephone shall be posted near the telephone.

At each swimming pool where lifeguards are employed, a telephone shall be available to the swimming pool staff for emergency purposes.

g. Water level. Water level in swimming pools shall be maintained at the skimming level.

h. Fully submerged outlets. Each outlet, including the main drain(s), shall be designed to prevent user entrapment. A swimming pool shall be closed if the cover/grate of a fully submerged outlet is missing or broken.

(1) Each fully submerged outlet shall have a cover/grate that has been tested for compliance with the requirements of the ASME standard by a testing agency approved by the department or that is certified for compliance by an engineer licensed in Iowa.

1. The cover/grate for an outlet system with a single fully submerged outlet shall have a flow rating of at least 100 percent of the maximum system flow rate. The combined flow rating for the cover/grates for an outlet system with more than one fully submerged outlet shall be at least 200 percent of the maximum system flow rate.

The maximum system flow rate for a main drain system is at least the design filter flow rate, but may include play feature and water slide flow. The maximum system flow rate for other fully submerged outlets is the design flow rate of the pump(s) directly connected to the outlet system.

2. Fully submerged outlet cover/grates shall not be removable without the use of tools.

3. Purchase records and product information that demonstrate compliance shall be maintained by the facility for at least five years from the time the cover/grate is purchased. If a field fabricated cover/grate is certified for compliance to the ASME standard by an engineer licensed in Iowa, a copy of the certification letter shall be kept at the facility for at least five years from the certification date.

(2) A swimming pool with a single fully submerged outlet that is not unblockable and that is directly connected to a pump shall be closed if the outlet does not have a cover/grate that complies with the ASME standard.

If a swimming pool has two or more fully submerged outlets on a single surface that are all less than 3 ft apart on center, are not unblockable, and are directly connected to a pump, the swimming pool is considered to have a single fully submerged outlet.

(3) A swimming pool with a single fully submerged outlet that is not unblockable and that is directly connected to a pump shall be closed if the outlet system is not equipped with a safety vacuum release system that is listed for compliance with ASME/ANSI A112.19.17-2002, "Manufactured Safety Vacuum Release Systems (SVRS) for Residential and Commercial Swimming Pool, Spa, Hot Tub, and Wading Pool Suction Systems," by a listing agency approved by the department; or another vacuum release system approved by the department.

1. Purchase records and product information that demonstrate compliance shall be maintained by the facility for at least five years from the time the SVRS is purchased or another approved system is installed.

2. An SVRS shall be installed in accordance with the manufacturer's instructions.

3. An SVRS shall be tested for proper function at the frequency recommended by the manufacturer, but at least once in each month the swimming pool is operated. The date and result of each test shall be recorded.

(4) In lieu of compliance with subparagraphs (1), (2) and (3) above, a fully submerged outlet in a swimming pool may be disabled with the approval of the department, except that an equalizer in a skimmer may be plugged without department approval. The management of the swimming pool shall submit to the department information including, but not necessarily limited to:

1. The area and volume of the pool;

2. The functional areas of the pool and the depths in those areas;

3. Detailed information about the inlet system, including the location of the inlets, the depth of the inlets, and the type of inlet fitting;

4. Detailed information about the overflow system, gutter or skimmer, number of skimmers, and pipe sizes;

5. Pump information and flow rates for the outlet system;

6. Filter type, number of filters, the size of the filter(s), and whether multiple filters are backwashed together or separately.

If the department approves the application to disable the outlet, the outlet valve shall be closed and the valve secured by removing the handle, by locking the handle closed, or by another method approved

by the department. The outlet may be physically disconnected from the pump system at the option of the facility management.

i. Surface finish and float lines.

(1) The bottom and sides of a swimming pool shall be white or a light color. This does not prohibit painting or marking racing lines, stairs or turn targets with contrasting colors.

(2) The swimming pool walls and floor shall have a smooth surface to facilitate cleaning.

(3) The boundary between shallow and deep water (5 ft) shall be marked by a float line with floats spaced no more than 5 ft apart. The float line shall be installed on the shallow side of the boundary within 12 inches of the boundary. When the slope of the floor of a swimming pool exceeds 1 ft vertical to 12 ft horizontal at a depth of less than 5 ft, the float line shall be placed on the shallow side of the slope change within 12 inches of the slope change in lieu of a float line at the 5 ft depth.

(4) A wave pool shall be equipped with a float line with floats spaced no more than 5 ft apart. The float line shall be located at least 6 ft from the deep-end wall. Users shall not be permitted between the float line and the deep-end wall.

(5) The landing area for a swimming pool slide or a water slide that terminates in a swimming pool shall be delineated by a float line or as approved by the department.

A float line is not required when the landing area is in deep water provided the distance between the slide and any diving board(s) meets the requirements for diving board spacing. The distance between the side of the slide at the slide's terminus and the swimming pool wall shall be in accordance with the manufacturer's recommendations, but shall be at least 8 ft.

A float line is not required for a slide that is designed for toddlers and young children and that terminates in water that is 2 ft deep or less. The landing area shall be designated by a brightly colored pad securely fastened to the floor of the swimming pool or by painting the floor at the end of the slide.

j. Depth marking.

(1) Depth markers shall be painted or otherwise marked on the deck within 3 ft of the edge of the swimming pool. The depth of a wave pool shall also be marked on the side walls of the wave pool, above the maximum static water level, where the depth is 3 ft or more, and on the deep-end wall of the wave pool. Depth markers are not required at the zero-depth end of a wading pool, wave pool, or a zero-depth swimming pool. Depth markers are not required at a plunge pool on the flume discharge end or on the exit end if stairs are used for exit.

(2) Depth markers shall be located at 1-ft depth intervals, but not more than 25 ft apart measured between the centers of the depth markers around the area of a swimming pool which has a water depth of 5 ft or less.

(3) Depth markers shall be located not more than 25 ft apart measured between the centers of the depth markers around the deep end of the swimming pool. The words "Deep Water" may be used in place of numerals.

(4) In lieu of subparagraph (2) above, the maximum depth of a wading pool may be posted at each entrance to a wading pool enclosure and at one conspicuous location inside the wading pool enclosure in letters or numbers at least 3 inches high.

(5) The depth of a leisure river shall be posted at the entrance(s) to the leisure river in characters at least 3 inches high. The depth of the leisure river shall be marked on the side wall of the leisure river above the static water level at intervals not to exceed 50 ft on center. The depth of the leisure river shall be marked on the deck in the areas where users are permitted. The depth markers shall be within 3 ft of the edge of the leisure river at intervals not to exceed 25 ft on center. The depth markers at a leisure river constructed before May 4, 2005, are not required to be changed until the deck or channel structure is replaced or repaired.

(6) "No Diving" or equivalent wording or graphics shall be marked on the swimming pool deck within 3 ft of the edge of the swimming pool where the water is shallow and at other pool areas determined by management. The markers shall be 25 ft apart or less, center to center, around the perimeter of the area. This marking is not required for wading pools or at the zero-depth end of a wave pool or of a zero-depth swimming pool. "No Diving" or equivalent wording or graphics shall be marked on the deck of a leisure river in areas where users are permitted. The "No Diving" markers shall be within 3 ft of the

edge of the leisure river at intervals not to exceed 25 ft on center. The "No Diving" markers at a leisure river constructed before May 4, 2005, are not required to be changed until the deck or channel structure is replaced or repaired.

(7) Letters, numbers, and graphics marked on the deck shall be slip-resistant, of a color contrasting with the deck and at least 4 inches in height.

k. Deck safety.

(1) Decks shall be maintained slip-resistant, and free of litter, obstructions and tripping hazards.

(2) Glass objects, other than eyeglasses and safety glass doors and partitions, shall not be permitted on the deck.

(3) There shall be no underwater or overhead projections or obstructions which would endanger swimmer safety or interfere with proper swimming pool operation.

l. Fencing.

(1) Except for a fill and drain wading pool, a circulated wading pool that is drained when not in use, or a spray pad, a swimming pool shall be enclosed by a fence, wall, building, or combination thereof not less than 4 ft high. The enclosure shall be constructed of durable materials.

(2) A fence, wall, or other means of enclosure shall have no openings that would allow the passage of a 4-inch sphere, and shall not be easily climbable by toddlers. The distance between the ground and the top of the lowest horizontal support accessible from outside the facility, or between the two lowest horizontal supports accessible from outside the facility, shall be at least 45 inches. A horizontal support is considered accessible if it is on the exterior of the fence relative to the swimming pool, or if the gap between the vertical members of the fence is greater than 1¾ inches.

(3) At least one gate or door with an opening of at least 36 inches in width shall be provided for emergency purposes. When closed, gates and doors shall comply with the requirements of (2) above. Except where lifeguard or structured program supervision is provided whenever the swimming pool is open, gates and doors shall be self-closing and self-latching.

(4) If a wading pool is within 50 ft of a swimming pool, the wading pool shall have a barrier at least 36 inches high separating it from the swimming pool. A barrier installed after May 4, 2005, shall have no openings that would allow the passage of a 4-inch sphere and shall not be easily climbable by toddlers. The barrier shall have at least one 36-inch-wide gate or door. Gates and doors shall be lockable. Except where lifeguard supervision is provided, gates and doors shall be self-closing and self-latching.

The department may approve alternate management of the area between the wading pool and swimming pool at a facility where lifeguards are provided whenever the pools are open. The alternate management plan shall be in writing and shall be at the facility when the pools are open.

(5) An indoor swimming pool shall be enclosed by a barrier at least 3 ft high if there are sleeping rooms, hallways, apartments, condominiums, or permanent recreation areas which are used by children and which open directly into the swimming pool area. No opening in the barrier shall permit the passage of a 4-inch sphere. The barrier shall not be easily climbable by toddlers. There shall be at least one 36-inch-wide gate or door through the barrier. Gates and doors shall be lockable. Except where lifeguard supervision is provided whenever the pool is open, gates and doors shall be self-closing and self-latching.

(6) A wave pool shall have a continuous barrier along the full length of each side of the wave pool. The barrier shall be at least 42 inches high and be installed no more than 3 ft from the side of the wave pool. Wave pool users shall not be permitted in this area.

m. Electrical.

(1) Electrical outlets. Each electrical outlet in the deck, shower room, and pool water treatment equipment areas shall be equipped with a properly installed ground fault circuit interrupter (GFCI) at the outlet or at the breaker serving the outlet. Electrical outlets energized through an ORP/pH controller are not required to have a separate GFCI if the controller is equipped with a GFCI or is energized through a GFCI breaker. GFCI receptacles and breakers shall be tested at least once in each month that the swimming pool is in operation. Testing dates and results shall be recorded in the pool records.

(2) Lighting.

1. Artificial lighting shall be provided at a swimming pool which is to be used at night or which does not have adequate natural lighting so that all portions of the swimming pool, including the bottom and main drain, may be clearly seen.

2. Underwater lights and fixtures shall be designed for their intended use. When the underwater lights operate at more than 15 volts, the underwater light circuit shall be equipped with a GFCI. When an underwater light needs to be repaired, the electricity shall be shut off until repairs are completed.

3. For outdoor swimming pools, no electrical wiring, except for overhead illumination, shall extend over a swimming pool.

n. Chlorine gas and carbon dioxide.

(1) Chlorine gas feed equipment and full and empty chlorine cylinders shall be housed in a room or building used exclusively for that purpose during the pool operation season. Chlorine gas installations constructed prior to March 14, 1990, that are housed within chain-link fence or similar enclosure may be used provided that the chlorine cylinders are protected from direct sunlight and the applicable requirements below are met.

1. A chlorine gas room or building shall have an airtight exhaust system which takes its suction near the floor and discharges out of doors in a direction to minimize the exposure to swimming pool patrons. The system shall provide one air change every four minutes.

2. An air intake shall be provided near the ceiling.

3. The exhaust fan shall be operated from a switch in a nearby location outside the chlorine room or building. The switch shall be clearly labeled "Chlorine Exhaust Fan."

4. The discharge from the exhaust system shall be outside the pool enclosure.

5. Artificial lighting shall be provided in the chlorine room or building.

6. The door of a chlorine room or building shall be secured in an open position whenever the room is occupied.

7. A plastic bottle of commercial strength ammonia solution for leak detection shall be provided.

8. Rooms or buildings where chlorine is stored or used shall be placarded in accordance with 875—Chapter 140, Iowa Administrative Code.

(2) Chlorine and carbon dioxide (CO_2) cylinders.

1. Chlorine gas and CO_2 cylinders shall be individually anchored with safety chains or straps.

2. Storage space shall be provided so that chlorine cylinders are not subject to direct sunlight.

3. The chlorinator shall be designed to prevent the backflow of water or moisture into the chlorine gas cylinder.

4. An automatic shutoff shall be provided to shut off the gas chlorinator and the pH control chemical pump when the recirculation pump stops.

o. Water slides.

(1) Water slide support structures shall be free of obvious structural defects.

(2) The internal surface of a flume shall be smooth and continuous for its entire length.

(3) The flume shall have no sharp edges within reach of a user while the user is in the proper sliding position.

15.4(5) *Showers, dressing rooms, and sanitary facilities.* Swimming pool users shall have access to showers, dressing rooms, and sanitary facilities that are clean and free of debris. If a bathhouse is provided, the following shall be met:

a. Floors shall have a slip-resistant surface.

b. Floors shall provide adequate drainage to prevent standing water.

c. Olefin or other approved carpeting may be used in locker room or dressing room areas provided there is an adequate drip area between the carpeting and the shower room, toilet facilities, swimming pool, or other area where water can accumulate.

d. All lavatories, showers, and sanitary facilities shall be functional.

e. Soap shall be available at each lavatory and at each indoor shower fixture.

15.4(6) *Management, notifications, and records.*

a. Certified operator required. Each facility shall employ a certified operator. One certified operator may be responsible for a maximum of three facilities. Condominium associations, apartments and homeowners associations with 25 or fewer living units are exempt from this requirement.

b. Pool rules sign. A legible pool rules sign shall be posted conspicuously at a minimum of two locations within the swimming pool enclosure. The sign shall include the following stipulations:

(1) No diving in the shallow end of the swimming pool and in other areas marked "No Diving."

(2) No rough play in or around the swimming pool.

(3) No running on the deck.

c. Other rules. Management may adopt and post such other rules as it deems necessary to provide for user safety and the proper operation of the facility.

d. "No Lifeguard" signs. Where lifeguards are not provided whenever the pool is open, a sign shall be posted at each entry to a swimming pool or a wading pool.

(1) The sign(s) at a swimming pool shall state that lifeguards are not on duty and children under the age of 12 must be accompanied by an adult.

(2) The sign(s) at a wading pool shall state that lifeguards are not on duty and children must be accompanied by an adult.

e. Water slide rules. Rules and restrictions for the use of a water slide shall be posted near the slide. The rules shall address the following as applicable:

(1) Use limits.

(2) Attire.

(3) Riding restrictions.

(4) Water depth at exit.

(5) Special rules to accommodate unique aspects of the attraction.

(6) Special warnings about the relative degree of difficulty.

f. Operational records. The operator of a swimming pool shall have the swimming pool operational records for the previous 12 months at the facility and shall make these records available when requested by a swimming pool inspector. These records shall contain a day-by-day account of swimming pool operation, including:

(1) ORP and pH readings, results of pH, free chlorine or total bromine residual, cyanuric acid, total alkalinity, combined chlorine, and calcium hardness tests, and any other chemical test results.

(2) Results of microbiological analyses.

(3) Reports of complaints, accidents, injuries, and illness.

(4) Dates and quantities of chemical additions, including resupply of chemical feed systems.

(5) Dates when filters were backwashed or cleaned or when a filter cartridge was changed.

(6) Monthly ground fault circuit interrupter test results.

(7) Dates of review of material safety data sheets.

(8) If applicable, dates and results of tests of each SVRS installed at a facility.

g. Submission of records. An inspection agency may require a facility operator to submit to the inspection agency on a monthly basis a copy of the records of the ORP and pH readings, chemical test results and microbiological analyses. The inspection agency shall notify the facility management of this requirement in writing at least 15 days before the reports are to be submitted for the first time. The facility management shall submit the required reports to the inspection agency within 10 days after the end of each month of operation.

h. Certificates. Copies of certified operator certificates and copies of lifeguard, first-aid, basic water rescue, and CPR certificates for the facility staff shall be kept at the facility.

i. Operations manual. A permanent manual for the operation of the swimming pool shall be kept at the facility. The manual shall include instructions for routine operations at the swimming pool including, but not necessarily limited to:

(1) Water testing procedures, including the required frequency of testing.

(2) Maintaining the chemical supply for the chemical feed systems.

(3) Filter backwash or cleaning.

(4) Vacuuming and cleaning the swimming pool.

(5) Superchlorination.

(6) Controller sensor maintenance, where applicable.

j. *Schematic drawing.* A schematic drawing of the pool recirculation system shall be posted in the swimming pool filter room or shall be in the operations manual. Clear labeling of the swimming pool piping with flow direction and water status (unfiltered, treated, backwash) may be substituted for the schematic drawing.

k. *Material safety data sheets.* Copies of material safety data sheets (MSDS) of the chemicals used at the swimming pool shall be kept at the facility in a location known and readily accessible to facility staff with chemical-handling responsibilities. Each member of the facility staff with chemical-handling responsibilities shall review the MSDS at least annually. The facility management shall retain records of the MSDS reviews at the facility and shall make the records available upon request by a swimming pool inspector.

l. *Emergency plan.* The facility management shall develop a written emergency plan. The plan shall include, but may not be limited to, actions to be taken in cases of drowning, serious illness or injury, chemical-handling accidents, weather emergencies, and other serious incidents. The emergency plan shall be reviewed with the facility staff at least once a year, and the dates of review or training shall be recorded in the pool records. The written emergency plan shall be kept at the facility and shall be available to a swimming pool inspector upon request.

m. *Lifeguard staffing plan.* The lifeguard/program staffing plan for the facility shall be available to the swimming pool inspector at the facility. The plan shall include staffing assignments for all programs conducted at the pool.

n. *Residential swimming pools used for commercial purposes.* A residential swimming pool that is used for commercial purposes shall be subject to the following requirements:

(1) The owner of a residential swimming pool that is used for commercial purposes shall register the swimming pool with the department in accordance with 641—15.9(135I), except that no registration fee is required.

(2) The recirculation system of the swimming pool shall be operating whenever the swimming pool is used for commercial purposes.

(3) The owner or the owner's representative shall test the swimming pool water for the free chlorine or the total bromine residual prior to and after each commercial use of the swimming pool. The owner or the owner's representative shall test the swimming pool water for pH and cyanuric acid (if applicable) at least once in each day that the swimming pool is used for commercial purposes. The test results shall be recorded. The records shall be made available to a swimming pool inspector upon request.

(4) The owner or the owner's representative shall test the swimming pool water for total alkalinity and calcium hardness at least once in each month that the swimming pool is used for commercial purposes. The test results shall be recorded. The records shall be made available to a swimming pool inspector upon request.

(5) During commercial use of a residential swimming pool, the chlorine or bromine residual shall meet the requirements of 15.4(2)*"a."* The pH shall meet the requirements of 15.4(2)*"b."* If an alternative disinfectant is used, the residual shall be maintained as recommended by the manufacturer of the product. The operational range specified by the manufacturer for an alternative disinfectant shall be written in the pool records.

(6) The swimming pool shall be inspected at least annually by the local inspection agency. The inspection shall be limited to a review of the records and a survey of the swimming pool for sanitation and obvious safety hazards.

15.4(7) *Reports.* Swimming pool and spa operators shall report to the local inspection agency, within one business day of occurrence, all deaths; near drowning incidents; head, neck, and spinal cord injuries; and any injury which renders a person unconscious or requires immediate medical attention.

[**ARC 7839B**, IAB 6/3/09, effective 7/8/09]

641—15.5(135I) Construction and reconstruction. A swimming pool constructed or reconstructed after May 4, 2005, shall comply with the following standards. Nothing in these rules is intended to exempt swimming pools and associated structures from any applicable federal, state or local laws, rules, or ordinances. Applicable requirements may include, but are not limited to, the handicapped access and energy requirements of the state building code, the fire and life safety requirements of the state fire marshal, the rules of the department of workforce development, and the rules of the department of natural resources.

15.5(1) *Construction permit.*

a. Permit required. No swimming pool shall be constructed or reconstructed without the owner or a designated representative of the owner first receiving a permit from the department. Construction shall be completed within 24 months from the date the construction permit is issued unless an extension is granted in writing by the department.

b. Permit application. The owner of a proposed or existing facility or a designated representative of the owner shall apply for a construction permit on forms provided by the department. The application shall be submitted to the department at least 15 days prior to the start of construction of a new swimming pool or the reconstruction of an existing swimming pool.

c. Plan submission and fee. Three sets of plans and specifications shall be submitted with the application. A nonrefundable plan review fee for each swimming pool, leisure river, water slide, wave pool, wading pool, spray pad, zero-depth swimming pool, and multisection water recreation pool shall be remitted with the application as required in 15.12(3).

d. Notification of completion. The owner of a newly constructed or reconstructed swimming pool, or the owner's designated representative, shall notify the department in writing at least 15 business days prior to opening the swimming pool.

15.5(2) *Plans and specifications.*

a. Plan certification. Plans and specifications shall be sealed and certified in accordance with the rules of the engineering and land surveying examining board or the architectural examining board by an engineer or architect licensed to practice in Iowa. This requirement may be waived by the department if the project is the addition or replacement of a chemical feed system, including a disinfection system, or a simple replacement of a filter or pump or both.

If the requirement for engineering plans is waived, the owner of the facility assumes full responsibility for ensuring that the reconstruction complies with these rules and with any other applicable federal, state and local laws, rules and ordinances.

b. Content of plans. Plans and specifications submitted shall contain sufficient information to demonstrate to the department that the proposed swimming pool will meet the requirements of this chapter. The plans and specifications shall include, but may not be limited to:

(1) The name and address of the owner and the name, address, and telephone number of the architect or engineer responsible for the plans and specifications. If a swimming pool contractor applies for a construction permit, the name, address and telephone number of the swimming pool contractor shall be included.

(2) The location of the project by street address or other legal description.

(3) A site plan showing the pool in relation to buildings, streets, water and sewer service, gas service, and electrical service.

(4) Detailed scale drawings of the swimming pool and its appurtenances, including a plan view and cross sections at a scale of 3/32 inch per ft or larger. The location of inlets, overflow system components, main drains, the deck and deck drainage, the location and size of pool piping, the swimming pool ladders, stairs and deck equipment, including diving stands and boards, and fencing shall be shown.

(5) A drawing(s) showing the location, plan, and elevation of filters, pumps, chemical feeders, ventilation devices, heaters, and surge tanks; and additional drawings or schematics showing operating levels, backflow preventers, valves, piping, flow meters, pressure gauges, thermometers, the make-up water connection, and the drainage system for the disposal of filter backwash water.

(6) Plan and elevation drawings of bathhouse facilities including dressing rooms; lockers; showers, toilets and other plumbing fixtures; water supply; drain and vent systems; gas service; water heating equipment; electrical fixtures; and ventilation systems, if provided.

(7) Complete technical specifications for the construction of the swimming pool, for the swimming pool equipment and for the swimming pool appurtenances.

c. *Deviation from plans.* No deviation from the plans and specifications or conditions of approval shall be made without prior approval of the department.

15.5(3) *General design.*

a. Construction of fill and drain wading pools is prohibited.

b. Materials. Swimming pools shall be constructed of materials which are inert, stable, nontoxic, watertight, and durable.

c. Structural loading.

(1) Swimming pools shall be designed and constructed to withstand the anticipated structural loading. If maintenance of the structural integrity of the swimming pool requires specific operations or limits of operation, these shall be specified in the permanent operations manual required in 15.5(3)*"f."*

(2) Except for aboveground swimming pools, a hydrostatic relief valve or a suitable underdrain system shall be provided.

d. Water supply. The water supplied to a swimming pool shall be from a water supply meeting the requirements of the department of natural resources for potable water.

(1) Water supplied to a swimming pool shall be discharged to the pool system through an air gap, or a reduced-pressure principle backflow device complying with AWWA C-511-97, "Reduced-Pressure Principle Backflow-Prevention Assembly."

(2) Each hose bib at a facility shall be equipped with an atmospheric vacuum breaker or a hose connection backflow preventer.

e. No part of a swimming pool recirculation system may be directly connected to a sanitary sewer. An air break or an air gap shall be provided.

f. Operations manual. The owner shall require that a permanent manual for the operation of the facility be provided. The manual shall include, but may not be limited to:

(1) Instructions for routine operations at the swimming pool including, but not necessarily limited to:

1. Filter backwash or cleaning.
2. Maintaining the chemical supply for the chemical feed systems.
3. Vacuuming and cleaning the swimming pool.
4. Swimming pool water testing procedures, including the frequency of testing.
5. Superchlorination.
6. Controller sensor maintenance and calibration, including the recommended frequency of maintenance.

(2) For each centrifugal pump, a pump performance curve plotted on an 8½″ × 11″ or larger sheet.

(3) For each chemical feeder, the maximum rated output listed in weight per time or volume per time units.

(4) Basic operating and maintenance instructions for swimming pool equipment that requires cleaning, adjustment, lubrication, or parts replacement, with recommended maintenance frequencies or the parameters that would indicate a need for maintenance.

g. A schematic drawing of the pool recirculation system shall be posted in the swimming pool filter room or shall be in the operations manual. Clear labeling of the swimming pool piping with flow direction and water status (unfiltered, treated, backwash) may be substituted for the schematic drawing.

h. A permanent file containing the operations and maintenance manuals for the equipment installed at the swimming pool shall be established. The file shall include a source for parts or maintenance for the equipment at the swimming pool. The file may be located in a location other than the facility, but it shall be readily available to the facility management and maintenance staff.

15.5(4) *Decks.*

a. Deck width. A swimming pool shall be surrounded by a deck. The deck shall be at least 6 ft wide for a Class A swimming pool, and 4 ft wide for a Class B swimming pool, and shall extend at least 4 ft beyond the diving stands, lifeguard chairs, swimming pool slides, or any other deck equipment.

b. Materials. Decks shall be constructed of stable, nontoxic, durable, and impervious materials and shall be provided with a slip-resistant surface.

c. Deck coverings. Porous, nonfibrous deck coverings may be used, subject to department approval, provided that:

(1) The covering allows drainage so that the covering and the deck underneath it do not remain wet or retain moisture.

(2) The covering is inert and will not support bacterial growth.

(3) The covering provides a slip-resistant surface.

(4) The covering is durable and cleanable.

d. Deck drainage. The deck of a swimming pool shall not drain to the pool or to the pool recirculation system except as provided in 15.5(15)*"c"* and 15.5(16)*"b."* For deck-level swimming pools ("rim flow" or "rollout" gutter), a maximum of 5 ft of deck may slope to the gutter.

e. Deck slope. The deck slope shall be at least 1/8 inch/ft and no more than 1/2 inch/ft to drain. The deck shall be designed and constructed so that there is no standing water on the deck during normal operation of the facility.

f. Surface runoff. For outdoor swimming pools, the drainage for areas outside the facility and for nondeck areas within the facility shall be designed and constructed to keep the drainage water off the deck and out of the swimming pool.

g. Carpeting. The installation of a floor covering of synthetic material may be used only in separate sunbathing, patio, or refreshment areas, except as permitted by 15.5(4)*"c."*

h. Hose bibs. At least one hose bib shall be provided for flushing the deck.

i. Rinse showers. If users are permitted free access between the deck and an adjacent sand play area without having to pass through a bathhouse, a rinse shower area shall be installed between the deck and the sand play area. Fences, barriers and other structures shall be installed so that users must pass through the rinse shower area when going from the sand play area to the deck.

(1) Tempered water shall be provided for the rinse shower(s).

(2) The rinse shower area shall have sufficient drainage so that there is no standing water.

(3) Foot surfaces in the rinse shower area shall be impervious and slip-resistant.

15.5(5) *Recirculation.*

a. Combined recirculation. Except for wading pools, two or more swimming pools may share the same recirculation system. A wading pool shall have a recirculation system separate from any other wading pool or swimming pool.

(1) The recirculation flow rate for each swimming pool shall be calculated in accordance with 15.5(5)*"b."* The recirculation flow rate for the system shall be at least the arithmetic sum of the recirculation flow rates of the swimming pools.

(2) The flow to each pool shall be adjustable. A flow meter shall be provided for each pool.

b. Recirculation flow rate. The recirculation flow rate shall provide for the treatment of one pool volume within:

(1) Four hours for a swimming pool with a volume of 30,000 gal or less.

(2) Six hours for a swimming pool with a volume of more than 30,000 gal.

(3) Two hours for a wave pool.

(4) Four hours for a zero-depth pool.

(5) One hour for a wading pool.

(6) One hour for a water slide plunge pool.

(7) Four hours for a leisure river.

(8) Thirty minutes for a spray pad with its own filter system.

(9) For swimming pools with skimmers, the recirculation flow rate shall be at least 30 gpm per skimmer or the recirculation flow rate defined above, whichever is greater.

The recirculation flow rate for pools not specified in 15.5(5)*"b"*(1) to (9) shall be determined by the department.

c. Recirculation pump. The recirculation pump(s) shall be listed by NSF or by another listing agency approved by the department as complying with the requirements of Standard 50 and shall comply with the following requirements:

(1) The pump(s) shall supply the recirculation flow rate required by 15.5(5)*"b"* at a TDH of at least that given in "1," "2," or "3" below, unless a lower TDH is shown by the designer to be appropriate. A valve for regulating the rate of flow shall be provided in the recirculation pump discharge piping.

1. 40 feet for vacuum filters; or
2. 60 feet for pressure sand filters; or
3. 70 feet for pressure diatomaceous earth filters or cartridge filters.

(2) For sand filter systems, the pump and filter system shall be designed so that each filter can be backwashed at a rate of at least 15 gpm/ft^2 of filter area.

(3) If a pump is located at an elevation higher than the pool water surface, it shall be self-priming or the piping shall be arranged to prevent the loss of pump prime when the pump is stopped.

(4) Where a vacuum filter is used, a vacuum limit control shall be provided on the pump suction line. The vacuum limit switch shall be set for a maximum vacuum of 18 in Hg.

(5) A compound vacuum-pressure gauge shall be installed on the pump suction line as close to the pump as practical. A vacuum gauge may be used for pumps with suction lift. A pressure gauge shall be installed on the pump discharge line as close to the pump as practical. Gauges shall be of such a size and located so that they may be easily read by the facility staff.

(6) On pressure filter systems, a hair and lint strainer shall be installed on the suction side of each recirculation pump. The hair and lint strainer basket shall be readily accessible for cleaning, changing, or inspection. A spare strainer basket shall be provided, except where the strainer basket has a volume of 15 gallons or more. This requirement may be waived for systems using vertical turbine pumps or pumps designed for solids handling.

d. Swimming pool water heaters.

(1) A heating coil, pipe or steam hose shall not be installed in a swimming pool.

(2) Gas-fired pool water heaters shall comply with the requirements of ANSI/AGA Z21.56-2001, ANSI/AGA Z21.56a-2004, and ANSI/AGA Z21.26b-2004. The data plate of the heater shall bear the AGA mark.

(3) Electric pool water heaters shall comply with the requirements of UL 1261 and shall bear the UL mark.

(4) A swimming pool water heater with an input of greater than 400,000 BTU/hour (117 kilowatts) shall have a water heating vessel constructed in accordance with ASME Boiler Code, Section 8. The data plate of the heater shall bear the ASME mark.

(5) A thermometer shall be installed in the piping to measure the temperature of the water returning to the pool. The thermometer shall be located so that it may be easily read by the facility staff.

(6) Combustion air shall be provided for fuel-burning water heaters as required by the state plumbing code, 641—Chapter 25, Iowa Administrative Code, or as required by local ordinance.

(7) Fuel-burning water heaters shall be vented as required by the state plumbing code, 641—Chapter 25, Iowa Administrative Code, or as required by local ordinance.

(8) Each fuel-burning water heater shall be equipped with a pressure relief valve sized for the energy capacity of the water heater.

e. Flow meters.

(1) Each swimming pool recirculation system shall be provided with a permanently installed flow meter to measure the recirculation flow rate.

(2) In a multiple pool system, a flow meter shall be provided for each pool.

(3) A flow meter shall be accurate within 5 percent of the actual flow rate between ± 20 percent of the recirculation flow rate specified in 15.5(5)*"b"* or the nominal recirculation flow rate specified by the designer.

(4) A flow meter shall be installed on a straight length of pipe with sufficient clearance from valves, elbows or other sources of turbulence to attain the accuracy required by 15.5(5)*"e"*(3). The flow meter shall be installed so that it may be easily read by facility staff, or a remote readout of the flow rate shall be installed where it may be easily read by the facility staff. The designer may be required to provide documentation that the installation meets the requirements of subparagraph (3).

f. *Vacuum cleaning system.*

(1) A swimming pool vacuum cleaning system capable of reaching all parts of the pool bottom shall be provided.

(2) A vacuum system may be provided which utilizes the attachment of a vacuum hose to the suction piping through a skimmer.

(3) Automatic vacuum systems may be used provided they are capable of removing debris from all parts of the swimming pool bottom.

15.5(6) *Filtration.* A filter shall be listed by NSF or by another listing agency approved by the department as complying with the requirements of Standard 50 and shall comply with the following requirements:

a. Pressure gauges. Each pressure filter shall have a pressure gauge on the inlet side. Gauges shall be of such a size and located so that they may be read easily by the facility staff. A differential pressure gauge that gives the difference between the inlet and outlet pressure of the filter may be used in place of a pressure gauge.

b. Air relief valve. An air relief valve shall be provided for each pressure filter.

c. Backwash water visible. Backwash water from a pressure filter shall discharge through an observable free fall, or a sight glass shall be installed in the backwash discharge line.

d. Indirect discharge required. Backwash water shall be discharged indirectly to a sanitary sewer or another point of discharge approved by the department of natural resources.

e. Rapid sand filter.

(1) The filtration rate shall not exceed 3 gpm/ft^2 of filter area.

(2) The backwash rate shall be at least 15 gpm/ft^2 of filter area.

f. High-rate sand filter.

(1) The filtration rate shall not exceed 15 gpm/ft^2 of filter area.

(2) The backwash rate shall be at least 15 gpm/ft^2 of filter area.

(3) If more than one filter tank is served by a pump, the designer shall demonstrate that the backwash flow rate to each filter tank meets the requirements of subparagraph (2) above, or an isolation valve shall be installed at each filter tank to permit each filter to be backwashed individually.

g. Vacuum sand filter.

(1) The filtration rate shall not exceed 15 gpm/ft^2 of filter area.

(2) The backwash rate shall be at least 15 gpm/ft^2 of filter area.

(3) An equalization screen shall be provided to evenly distribute the filter influent over the surface of the filter sand.

(4) Each filter system shall have an automatic air-purging cycle.

h. Sand filter media shall comply with the filter manufacturer's specifications.

i. Diatomaceous earth filter.

(1) The filtration rate shall not exceed 1.5 gpm/ft^2 of effective filter area except that a maximum filtration rate of 2.0 gpm/ft^2 may be allowed where continuous body feed is provided.

(2) Diatomaceous earth filter systems shall have piping to allow recycling of the filter effluent during precoat.

(3) Waste diatomaceous earth shall be discharged to a sanitary sewer or other point of discharge approved by the department of natural resources. The discharge may be subject to the requirements of the local wastewater utility.

j. Cartridge filter.

(1) The filtration rate shall not exceed 0.38 gpm/ft^2 of filter area.

(2) A duplicate set of cartridges shall be provided.

k. Other filter systems may be used if approved by the department.

15.5(7) *Piping.*

a. Piping standards. Swimming pool piping shall conform to applicable nationally recognized standards and shall be specified for use within the limitations of the manufacturer's specifications. Swimming pool piping shall comply with the applicable requirements of NSF/ANSI Standard 61, "Drinking Water System Components—Health Effects." Plastic swimming pool pipe shall comply with the requirements of NSF/ANSI Standard 14, "Plastic Piping Components and Related Materials," for potable water pipe.

b. Pipe sizing. Swimming pool recirculation piping shall be sized so water velocities do not exceed 6 ft/sec for suction flow and 10 ft/sec for pressure flow. Gravity piping shall be sized in accordance with recognized engineering principles.

c. Overflow system piping. The piping for an overflow perimeter gutter system shall be designed to convey at least 125 percent of the recirculation flow rate. The piping for a skimmer system shall be designed to convey at least 100 percent of the recirculation flow rate.

d. Main drain piping. If the main drains are connected to the recirculation system, the main drains and main drain piping shall be designed to convey at least 100 percent of the recirculation flow rate.

e. Play feature circulation. Where there are attractions, such as water slides, fountains and play features, that circulate water to the swimming pool and through the main drain and overflow systems, the main drain and overflow systems and the associated piping shall be designed to accommodate the combined flow of the recirculation system and the attractions within the requirements of paragraph *"b"* above and the applicable requirements of 15.5(9) and 15.5(10).

15.5(8) *Inlets.*

a. Inlets required. Wall inlets or floor inlets, or both, shall be provided for a swimming pool. The inlets shall be adequate in design, number, location, and spacing to ensure effective distribution of treated water and the maintenance of a uniform disinfectant residual throughout the swimming pool. The designer may be required to provide documentation of adequate distribution. The department may require dye testing of a pool.

b. Wall inlet spacing. Where wall inlets are used, they shall be no more than 20 ft apart around the perimeter of the area with an inlet within 5 ft of each corner of the swimming pool.

(1) There shall be at least one inlet at each stairway or ramp leading into a swimming pool.

(2) Except for wading pools, wall inlets shall be located at least 6 inches below the design water surface.

(3) Wall inlets in pools with skimmers shall be directional flow-type inlets.

(4) Each inlet shall have a directional flow inlet fitting with an opening of 1-inch diameter or less, or a fixed fitting with openings ½ inch wide or less.

c. Floor inlets. Floor inlets shall be provided for the areas of a zero-depth swimming pool or wave pool where the water is less than 2 ft deep and may be used throughout a swimming pool in lieu of or in combination with wall inlets. Floor inlets shall be no more than 20 ft apart in the area where they are used. There shall be floor inlets within 15 ft of each wall of the swimming pool in the area where they are used. Floor inlets shall be flush with the pool floor.

15.5(9) *Overflow system.*

a. Skimmers. Recessed automatic surface skimmers shall be listed by NSF or by another listing agency approved by the department as complying with the requirements of Standard 50 except that an equalizer is not required for a skimmer installed in a swimming pool equipped with an automatic water level maintenance device.

(1) Skimmers may be used for swimming pools which are no more than 30 ft wide.

(2) A swimming pool shall have at least one skimmer for each 500 ft^2 of surface area or fraction thereof.

(3) Each skimmer shall be designed for a flow-through rate of at least 30 gpm or 3.8 gpm per lineal inch of weir, whichever is greater. The combined flow capacity of the skimmers in a swimming pool shall not be less than the total recirculation rate.

(4) Each skimmer shall have a weir that adjusts automatically to variations in water level of at least 4 inches.

(5) Each skimmer shall be equipped with a device to control flow through the skimmer.

(6) If a swimming pool is not equipped with an automatic water level maintenance device, each skimmer that is a suction outlet shall have an operational equalizer. The equalizer opening in the swimming pool shall be covered with a fitting listed by a listing agency approved by the department as meeting the requirements of the ASME standard.

(7) A skimmer pool shall have an approved handhold around the perimeter of the pool. The handhold shall be 9 inches or less above the minimum skimmer operation level.

b. Perimeter overflow gutters.

(1) A perimeter overflow gutter system is required for a swimming pool greater than 30 ft in width, except for a wave pool or a wading pool.

(2) The overflow weir shall extend completely around the swimming pool, except at stairs, ramps, or water slide flumes.

(3) The gutter shall be designed to provide a handhold and to prevent entrapment.

(4) Drop boxes, converters, return piping, or flumes used to convey water from the gutter shall be designed to convey 125 percent of the recirculation flow rate. The flow capacity of the gutter and the associated plumbing shall be sufficient to prevent backflow of skimmed water into the swimming pool.

(5) Gutter overflow systems shall be designed with an effective surge capacity within the gutter system and surge tank of not less than 1 gal/ft^2 of swimming pool surface area. In-pool surge may be permitted for prefabricated gutter systems, subject to the approval of the department.

c. Alternative overflow systems. Overflow systems not meeting all of the requirements in 15.5(9)*"a"* or 15.5(9)*"b"* may be used if the designer can provide documentation that the alternative overflow system will skim the pool water surface at least as effectively as a skimmer system.

15.5(10) *Main drain system.*

a. Main drains. Each swimming pool shall have a convenient means of draining the water from the pool for winterization and service.

b. Main drains for recirculation. If the main drain system is connected to the recirculation system, there shall be two or more main drains or a single main drain that is unblockable.

(1) Two main drains shall be at least 3 ft apart on center. If three or more main drains are installed, the distance between the drains farthest apart shall be at least 3 ft on center.

(2) Each main drain and its associated piping in a swimming pool shall be designed for the same flow rate. Multiple drains shall be plumbed in parallel, and the piping system shall be designed to equalize flow among the main drains.

(3) If one or two main drains are installed, each main drain cover/grate, sump and the associated piping shall be designed for at least 100 percent of the recirculation flow rate specified by 15.5(5)*"b."* If three or more main drains are installed, the combined flow rating of the cover/grates, the sumps and the associated piping shall be at least 200 percent of the recirculation flow rate. If water for water slides, fountains and play features is circulated through the main drain and overflow systems, the main drains shall be designed for the combined feature and recirculation flow.

(4) Manufactured main drain sumps shall be listed by a listing agency acceptable to the department for compliance with the ASME standard. Field fabricated sumps shall be designed in accordance with the ASME standard and shall be certified by an engineer licensed in Iowa.

(5) There shall be a control valve to adjust the flow between the main drain and the overflow system.

(6) Main drain covers. Each main drain shall be covered with a cover/grate that complies with the ASME standard.

1. The flow rating for each cover/grate shall comply with 15.5(10)*"b"*(3).

2. The mark of a listing agency acceptable to the department shall be permanently marked on the top surface of each manufactured cover/grate.

3. Field fabricated cover/grates shall be certified for compliance to the ASME standard by a professional engineer licensed in Iowa. A certificate of compliance shall be provided to the swimming pool owner and to the department.

4. The main drain cover/grate shall be designed to be securely fastened to the pool so that the cover/grate is not removable without tools.

c. *Feature outlets.* Where fully submerged outlets for play or decorative features or water slides are in the swimming pool, the outlets shall be designed in accordance with 15.5(10)*"b."*

15.5(11) *Disinfection.*

a. Each swimming pool recirculation system approved for construction after May 4, 2005, shall be equipped with an automatic controller for maintenance of the disinfectant level in the swimming pool water. The control output of the controller to the disinfectant feed system shall be based on the continuous measurement of the ORP of the water in the swimming pool recirculation system.

b. No disinfection system designed to use di-chlor or tri-chlor shall be installed for an indoor swimming pool after May 4, 2005.

c. Disinfection system capacity. A continuous feed disinfectant system shall be provided. The disinfectant feed system shall have the capacity to deliver at least 10 mg/L chlorine or bromine equivalent based on the recirculation flow rate required in 15.5(5)*"b"* for an outdoor swimming pool and 4 mg/L chlorine or bromine equivalent based on the recirculation flow rate required in 15.5(5)*"b"* for an indoor swimming pool.

d. Feeder listing. A disinfectant feeder (except chlorine gas feed equipment) shall be listed by NSF or by another listing agency approved by the department as complying with the requirements of Standard 50.

e. Chemical feed stop. The disinfectant system shall be installed so that chemical feed is automatically and positively stopped when the recirculation flow is interrupted.

f. Gas chlorinators. Gas chlorinator facilities shall comply with applicable federal, state and local laws, rules and ordinances and the requirements below.

(1) The chlorine supply and gas feeding equipment shall be housed in a separate room or building.

1. No entrance or openable window to the chlorine room shall be to the inside of a building used other than for the storage of chlorine.

2. The chlorine room shall be provided with an exhaust system which takes its suction not more than 8 inches from the floor and discharges out of doors in a direction to minimize the exposure of swimming pool patrons to chlorine gas. The exhaust system shall be capable of producing 15 air changes per hour in the chlorine room.

3. An automatic chlorine leak detector and alarm system shall be provided in the chlorine room. The alarm system shall provide visual and audible alarm signals outside the chlorine room.

4. An air intake shall be provided near the ceiling of the chlorine room. The air intake and the exhaust system outlet shall be at least 4 ft apart.

5. The room shall have a window at least 12 inches square. The window glass shall be shatterproof.

6. The door of the chlorine enclosure shall open outward. The inside of the door shall be provided with panic hardware.

7. The chlorine room shall have adequate lighting.

8. Electrical switches for the exhaust system and for the lighting shall be outside the chlorine room and adjacent to the door, or in an adjoining room.

9. An anchoring system shall be provided so that full and empty chlorine cylinders can be individually secured.

10. Scales shall be provided for weighing the cylinders that are in use.

(2) A chlorine enclosure that is 30 inches deep or less and 72 inches wide or less and that is installed out of doors shall comply with the above requirements except:

1. An automatic chlorine leak detector is not required.

2. The enclosure shall have a window of at least 48 in^2.

3. The light and exhaust fan may be activated by opening the door rather than by a separate switch.

(3) The chlorinator shall be designed to prevent the backflow of water into the chlorine cylinder.

g. Solution feed. Where a metering pump is used to feed a solution of disinfectant, the disinfectant solution container shall have a capacity of at least one day's supply at the rate specified in 15.5(11)*"c,"* except that when the system is designed to feed directly from a 55-gal shipping container, a larger solution container is not required.

NOTE: Secondary containment must be provided when a tank larger than 55 gallons is installed for the storage of sodium hypochlorite.

h. Erosion disinfectant feeders. The storage capacity of an erosion feeder shall be at least one day's supply of disinfectant at the rate specified in 15.5(11)*"c."*

i. Test equipment. Test equipment complying with the following requirements shall be provided.

(1) The test equipment shall provide for the direct measurement of free chlorine and combined chlorine from 0 to 10 ppm in increments of 0.2 ppm or less over the full range, or total bromine from 0 to 20 ppm in increments of 0.5 ppm over the full range.

(2) The test equipment shall provide for the measurement of swimming pool water pH from 7.0 to 8.0 with at least five increments in that range.

(3) The test equipment shall provide for the measurement of total alkalinity and calcium hardness with increments of 10 ppm or less.

(4) The test equipment shall provide for the measurement of cyanuric acid from 30 to 100 ppm. This requirement may be waived for a facility that does not use cyanuric acid or a stabilized chlorine disinfectant.

15.5(12) *pH control.*

a. *pH controller required.* Each swimming pool recirculation system approved for construction after May 4, 2005, shall be equipped with a controller that senses the pH of the swimming pool water, and that automatically controls the operation of a metering pump for the addition of a pH control chemical or the operation of a carbon dioxide (CO_2) gas feed system.

b. *pH chemical feed required.* Each swimming pool shall have a metering pump for the addition of a pH control chemical to the pool recirculation system, or a carbon dioxide (CO_2) gas feed system.

c. *Metering pump listing.* A metering pump shall be listed by NSF or by another listing agency approved by the department as meeting the requirements of Standard 50.

d. *CO2 cylinder anchors.* Where carbon dioxide (CO_2) is used as a method of pH control, an anchoring system shall be provided to individually secure full and empty CO_2 cylinders.

e. *Chemical feed stop.* The pH control system shall be installed so that chemical feed is automatically and positively stopped when the recirculation flow is interrupted.

15.5(13) *Safety.*

a. Diving areas.

(1) Diving boards are permitted only if the diving area dimensions conform to the minimum requirements shown in Figure 3, Tables 4 and 5. Alternative diving well configurations may be used, subject to the approval of the department, but the boundaries of the diving well shall be outside the boundaries prescribed in these rules. The distances specified in Tables 4 and 5 shall be measured from the top center of the leading edge of the diving board. The reference water level shall be the midpoint of the skimmer opening for a skimmer pool or a stainless steel gutter system with surge weirs. The reference water level for a gutter pool shall be the top of the gutter weir.

(2) Where diving boards are specified that have been advertised or promoted to be "competition" diving boards, the diving area shall comply with the standards of the National Collegiate Athletic Association (NCAA) or the National Federation of State High School Associations (NFSHSA).

Figure 3

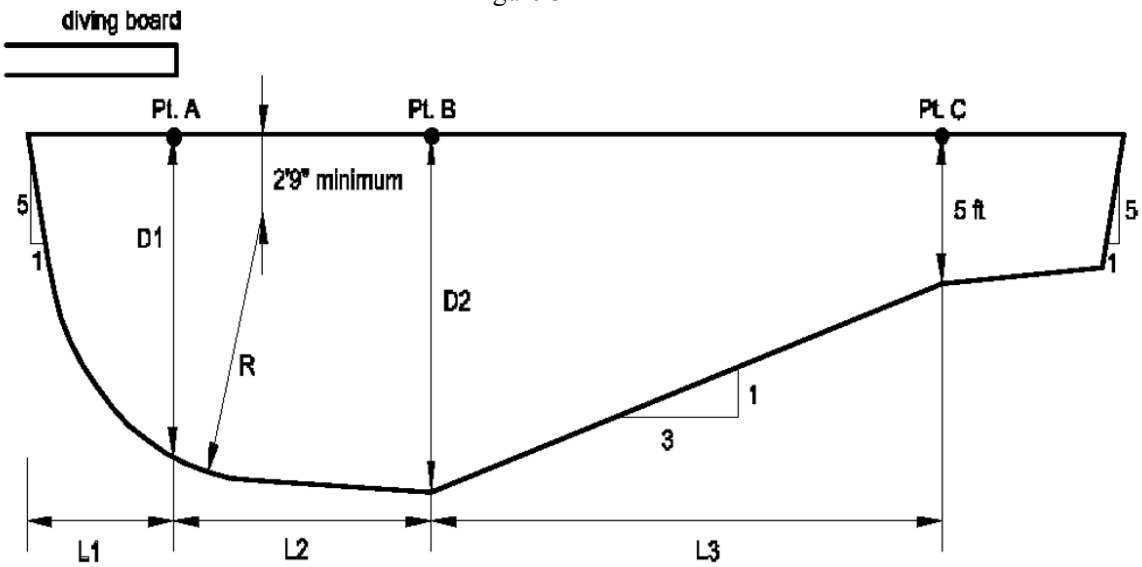

R minimum = Pool depth minus Vertical wall depth from the water line minus 3 inches.

Table 4

		Minimum Dimensions					Minimum Width of Pool		
Diving Board Height Above Water	Maximum Board Length	D1	D2	L1	L2	L3	Pt A	Pt B	Pt C
Deck level to 2/3 meter	10 ft	7 ft	8.5 ft	2.5 ft	8 ft	10.5 ft	16 ft	18 ft	18 ft
Greater than 2/3 meter to 3/4 meter	12 ft	7.5 ft	9 ft	3 ft	9 ft	12 ft	18 ft	20 ft	20 ft
Greater than 3/4 meter to 1 meter	16 ft	8.5 ft	10 ft	4 ft	10 ft	15 ft	20 ft	22 ft	22 ft
Greater than 1 meter to 3 meters	16 ft	11 ft	12 ft	6 ft	10.5 ft	21 ft	22 ft	24 ft	24 ft

Table 5

Diving Board Height Above Water	To Pool Side	To 1-Meter Board	To 3-Meter Board
Deck level to 1 meter	10 ft	8 ft	10 ft
Greater than 1 meter	11 ft	10 ft	10 ft

(3) There shall be a completely unobstructed clear distance of 13 ft above the diving board measured from the center of the front end of the board. This area shall extend at least 8 ft behind, 8 ft to each side, and 16 ft beyond the end of the diving board.

(4) Diving boards and platforms over 3 meters high are prohibited except where approved by the department.

(5) Diving boards and platforms shall have slip-resistant surfaces.

(6) Diving board supports, ladders, and guardrails.

1. Supports, platforms, and steps for diving boards shall be of substantial construction and of sufficient structural strength to safely carry the maximum anticipated loads.

2. Ladders, steps, supports, handrails and guardrails shall be of corrosion-resistant materials or shall be provided with a corrosion-resistant coating. They shall be designed to have no exposed sharp edges. Ladder steps shall have slip-resistant surfaces.

3. Handrails shall be provided at steps and ladders leading to diving boards and diving platforms. Guardrails shall be provided for diving boards and platforms which are more than 1 meter above the water. Guardrails for diving boards and platforms shall be at least 36 inches high and shall have at least one horizontal mid-bar and shall extend to the edge of the water.

b. Starting blocks and starting block installation shall meet the requirements of the competition governing body (National Collegiate Athletic Association, USA Swimming, or National Federation of State High School Associations).

c. Stairs, ladders, and recessed steps.

(1) Ladders or recessed steps shall be provided in the deep portion of a swimming pool and in the shallow portion if the vertical distance from the bottom of the swimming pool to the deck is more than 2 ft. Stairs or ramps may be used instead of ladders or recessed steps at the shallow end of the swimming pool.

(2) If a swimming pool is over 30 ft wide, recessed steps, ladders, ramps, or stairs shall be installed on each side. If a stairway centered on the shallow end wall of the swimming pool is within 30 ft of each side of the swimming pool, that end of the swimming pool shall be considered in compliance with this subrule.

(3) The foot contact surfaces of stairs, ramps, ladder rungs, and recessed steps shall be slip-resistant.

(4) Ladders.

1. Ladders shall have a handrail on each side which extends from below the water surface to the top surface of the deck.

2. Ladders, treads, or supports shall be of a color contrasting with the swimming pool walls; however, stainless steel ladders may be used with stainless steel wall pools.

3. A ladder shall have a tread width of at least 16 inches and a uniform rise of 12 inches or less.

4. The distance between the swimming pool wall and the vertical rail of a ladder shall be no greater than 6 inches and no less than 3 inches. The lower end of each ladder rail shall be securely covered with a smooth nonmetallic cap. The lower end of each ladder rail shall be within 1 inch of the swimming pool wall.

Figure 4

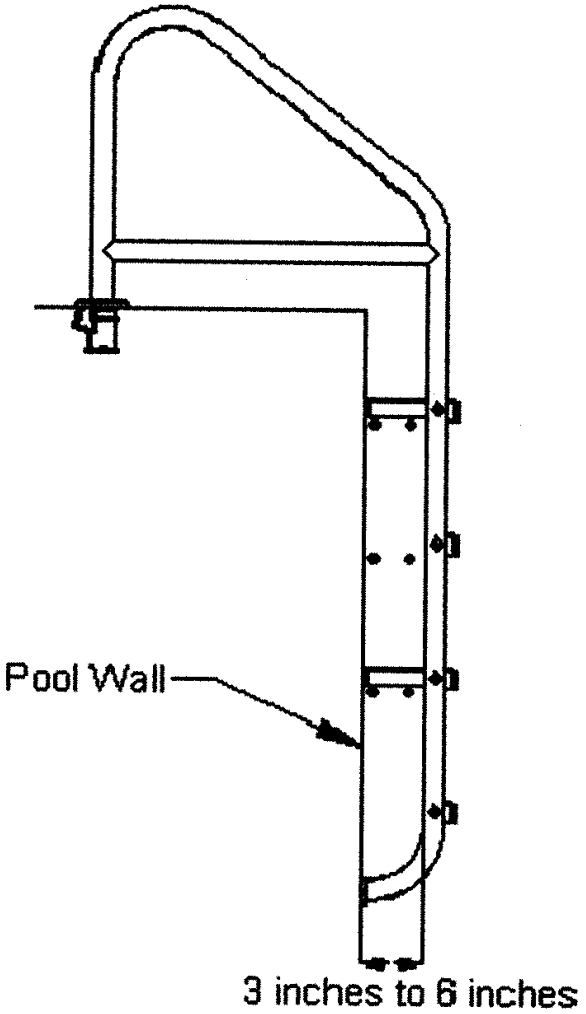

(5) Recessed steps.

1. Recessed steps shall have a tread depth of at least 5 inches, a tread width of at least 12 inches, and a uniform rise of no more than 12 inches.

2. Each set of recessed steps shall be equipped with a securely anchored deck-level grab rail on each side.

3. Recessed steps shall drain to the pool.

(6) Stairs.

1. Stairs shall have a uniform tread depth of at least 12 inches and a uniform rise of no more than 10 inches. The area of each tread shall be at least 240 in^2.

2. Stairs shall be provided with at least one handrail for each 12 ft in width. Handrails shall be between 34 inches and 38 inches high, measured vertically from the line defined by the front edge of the steps.

3. A stripe at least 1 inch wide of a color contrasting with the step surface and with the swimming pool floor shall be marked at the top front edge of each tread. The stripe shall be slip-resistant.

(7) Handrails and grab rails.

1. Ladders, handrails, and grab rails shall be designed to be securely anchored so that tools are required for their removal.

2. Ladders, handrails, and grab rails shall be constructed of corrosion-resistant materials or provided with corrosion-resistant coatings. They shall have no exposed sharp edges.

d. Floor slope. The bottom of the swimming pool shall slope toward the main drain(s). The slope of the swimming pool bottom where the water is less than 5 ft deep shall not exceed 1 ft vertical in 12 ft horizontal.

(1) Subject to the approval of the department, a swimming pool may be designed to have the change in slope (from 1:12 or less to a steeper slope) at a point where the water depth is less than 5 ft. The marking requirements of 15.5(13)*"f"*(3) and 15.5(13)*"f"*(4) shall apply and, if possible, depth markers which are clearly visible to persons in the pool shall be provided.

(2) For a wave pool, steeper slopes may be approved by the department if they are required for the proper function of the wave pool.

e. Walls.

(1) Walls in the deep section of a swimming pool shall be vertical to a water depth of at least 2.8 ft. If a transition radius is provided, it shall comply with Figure 3.

Figure 5

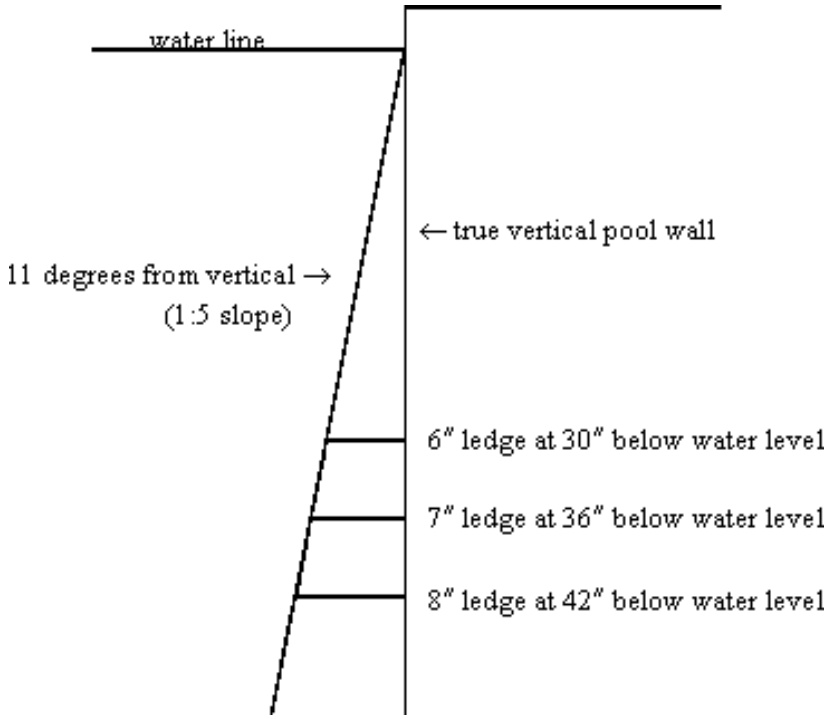

(2) The term "vertical" is interpreted to permit slopes not greater than 1 ft horizontal for each 5 ft of depth of side wall (11° from vertical).

(3) Ledges, when provided, shall fall within an 11° line from vertical, starting at the water surface (Figure 5). A ledge shall be no less than 4 inches wide and no more than 8 inches wide. A ledge shall have a slip-resistant surface.

f. Surface finish and markings.

(1) The swimming pool floor shall have a slip-resistant finish.

(2) The bottom and sides of the swimming pool shall be white or a light color. This does not prohibit painting or marking racing lines or turn targets.

(3) Where the slope of a swimming pool bottom in a shallow area changes from 1:12 or less to a slope greater than 1:12, or at the 5-ft depth area, the pool bottom and sides shall be marked with a stripe at least 4 inches wide in a color contrasting with the pool bottom and sides. The stripe shall be on the shallow side of the slope change or 5-ft depth area within 6 inches of the slope change or 5-ft depth area. Depending on the pool configuration, more than one stripe may be required.

(4) A float line with floats no more than 5 ft apart shall be installed on the shallow side of the stripe required in 15.5(13)*"f"*(3) within 12 inches of the stripe.

(5) The landing area for a swimming pool slide or a water slide which does not terminate in a separate plunge pool shall be delineated by a float line or as approved by the department.

(6) Depth markers.

1. Depth markers shall be painted or otherwise marked on the deck within 3 ft of the edge of a swimming pool. The depth of a wave pool shall also be marked on the side walls of the wave pool above the maximum static water level where the static water depth is 3 ft or more and on the deep-end wall of the wave pool.

2. Depth markers shall be located 25 ft apart or less, center to center, around the full perimeter of a swimming pool.

EXCEPTIONS: Depth markers are not required at the zero-depth end of a wading pool, wave pool, or a zero-depth swimming pool. Depth markers are not required on the deck of a plunge pool on the flume discharge end or on the exit end if stairs are used for exit.

3. The maximum depth of a swimming pool shall be marked on both sides of a swimming pool at the main drain.

4. The water depth of a swimming pool shall be marked at both ends of a float line required by 15.5(13)*"f"*(4).

5. In shallow water, the depth shall be marked at 1-ft depth intervals starting at one of the points specified in "3" and "4" above, if the 1-ft depth interval is less than 25 ft. The zero depth shall be used as the starting point for a zero-depth swimming pool.

6. In deep water, the words "Deep Water" may be used in place of numerals except as required in "3" above.

7. "No Diving" or equivalent wording or graphics shall be marked on the swimming pool deck within 3 ft of the edge of the swimming pool where the water is shallow and at other pool areas determined by management. The markers shall be 25 ft apart or less, center to center, around the perimeter of the area. This marking is not required at the zero-depth end of a wave pool or of a zero-depth swimming pool. "No Diving" or equivalent wording or graphics shall be marked on the deck of a leisure river in the areas where users will be permitted. The "No Diving" markers shall be within 3 ft of the edge of the leisure river at intervals not to exceed 25 ft on center.

8. Letter, number and graphic markers shall be slip-resistant, of a contrasting color from the deck and at least 4 inches in height.

9. In lieu of the requirements of "1" through "8" above, the maximum depth of a wading pool may be posted in lettering a minimum of 3 inches high at each entrance to the wading pool area and at least at one conspicuous location inside the wading pool enclosure. "No Diving" markers are not required at a wading pool.

10. The depth of a leisure river shall be posted at the entrance(s) to the leisure river in characters at least 3 inches high. The depth of the leisure river shall be marked on the side wall of the leisure river above the static water level at intervals not to exceed 50 ft on center. The depth of the leisure river shall be marked on the deck in the areas where users will be permitted. The depth markers shall be within 3 ft of the edge of the leisure river at intervals not to exceed 25 ft on center.

g. Lifeguard chairs. One elevated lifeguard chair or station shall be provided for a swimming pool with a water surface area of 2000 to 4000 ft^2 inclusive; two chairs shall be provided if the area is 4001 to 6000 ft^2; three chairs shall be provided if the area is 6001 ft^2 or more. A swimming pool is not required to have more than three lifeguard chairs or stations. This requirement does not apply to wave pools, leisure rivers or wading pools.

h. Emergency equipment and facilities.

(1) If a swimming pool facility employs lifeguards, whether required by rule or not, the lifeguards shall be provided with the minimum equipment required by their training including, but not necessarily limited to, rescue tubes and personal CPR masks.

(2) A minimum of one unit of lifesaving equipment shall be provided for each 1500 ft^2 of water surface area or fraction thereof. The area of a swimming pool where the water is 2 ft deep or less may be subtracted from the total area for this requirement. A swimming pool is not required to have more than ten units of lifesaving equipment.

(3) A unit of lifesaving equipment consists of at least one of the following:

1. A U.S. Coast Guard-recognized ring buoy fitted with a ¼-inch diameter line with a length at least one-half the width of the pool, but no more than 60 ft; or

2. A life pole with a "shepherd's crook," having blunted ends with a minimum length of 8 ft; or

3. A rescue buoy which is made of a hard, buoyant plastic and is provided with molded handgrips along each side, a shoulder strap, and a towing rope between 4 and 6 ft long; or

4. A rescue tube made of a soft, strong foam material 3 inches by 6 inches by 40 inches with a molded strap providing a ring at one end and a hook at the other. Attached to the ring end shall be a 6-ft-long towline with a shoulder strap; or

5. Any other piece of rescue equipment approved by the department.

Rescue equipment identified in 15.5(13)*"h"*(3)"3" and 15.5(13)*"h"*(3)"4" above shall be used only at swimming pools where lifeguards are employed.

(4) Whenever lifeguard chairs are provided, each chair shall be equipped with at least one unit of lifesaving equipment.

(5) A standard spine board with straps and head immobilizer shall be provided at each swimming pool where lifeguards are required by rule.

i. Pool enclosures.

(1) Except for a fill and drain wading pool, a circulated wading pool that is drained when not in use, or a spray pad, a swimming pool shall be enclosed by a fence, wall, building, or combination thereof not less than 4 ft high. The enclosure shall be constructed of durable materials.

(2) A fence, wall, or other means of enclosure shall have no openings that would allow the passage of a 4-inch sphere, and shall not be easily climbable by toddlers. The distance between the ground and the top of the lowest horizontal support accessible from outside the facility, or between the two lowest horizontal supports accessible from outside the facility, shall be at least 45 inches. A horizontal support is accessible if it is on the exterior of the fence relative to the swimming pool, or if the space between the vertical members of a fence is greater than 1¾ inches.

(3) Gates and doors shall be installed in the enclosure for general access, maintenance and emergency access. At least one 36-inch-wide gate or door shall be installed for emergency access. When closed, gates and doors shall comply with the requirements of 15.5(13)*"i"*(1) and (2). Gates and doors shall be lockable. Except where lifeguard or structured program supervision is provided whenever the swimming pool is open, gates and doors shall be self-closing and self-latching.

(4) If a wading pool is within 50 ft of a swimming pool, the wading pool shall have a barrier at least 36 inches high separating it from the swimming pool. A barrier installed after May 4, 2005, shall have no openings that would allow the passage of a 4-inch sphere and shall not be easily climbable by toddlers. The barrier shall have at least one 36-inch-wide gate or door. Gates and doors shall be lockable. Except where lifeguard supervision is provided, gates and doors shall be self-closing and self-latching.

The department may approve alternate management of the area between the wading pool and swimming pool at facilities where lifeguards are provided whenever the pools are open. The alternate management plan shall be in writing and shall be at the facility when the pools are open.

(5) An indoor swimming pool shall be enclosed by a barrier at least 3 ft high if there are sleeping rooms, hallways, apartments, condominiums, or permanent recreation areas which are used by children and which open directly into the swimming pool area. No opening in the barrier shall permit the passage of a 4-inch sphere. The barrier shall not be easily climbable by toddlers. There shall be at least one 36-inch-wide gate or door through the barrier. Gates and doors shall be lockable. Except where lifeguard supervision is provided whenever the pool is open, gates and doors shall be self-closing and self-latching.

j. Electrical. Construction or reconstruction shall meet the requirements in Section 680 of the National Electrical Code, 70-05, as published by the National Fire Protection Association, Batterymarch Park, Quincy, MA 02269, and the following requirements:

(1) Each electrical outlet in the deck, shower and dressing rooms and the pool water treatment equipment areas shall be equipped with a properly installed ground fault circuit interrupter (GFCI) at the outlet or at the breaker serving the outlet. Electrical outlets energized through an ORP/pH controller are

not required to have a separate GFCI if the controller is equipped with a GFCI or is energized through a GFCI breaker.

(2) An underwater light circuit shall be equipped with a GFCI unless the underwater light(s) operates at 15 volts or less.

k. Lighting. Artificial lighting shall be provided at indoor swimming pools and at outdoor swimming pools which are to be used after sunset in accordance with the following:

(1) Underwater lighting of at least 60 lamp lumens/ft^2 or 0.5 watts/ft^2 of water surface area, located to provide illumination of the entire swimming pool bottom, and area lighting of at least 10 lumens/ft^2 or 0.6 watts/ft^2 of deck area.

(2) If underwater lights are not provided, overhead lighting of at least 30 lumens/ft^2 or 2.0 watts/ft^2 of swimming pool water surface area shall be provided.

l. Swimming pool slides. Swimming pool slides shall meet the requirements of the January 1, 2004, product standard of the United States Consumer Product Safety Commission (CFR Title 16, Part 1207). Swimming pool slides shall be installed in accordance with the manufacturer's recommendations.

15.5(14) *Wading pools.* Wading pools shall comply with the applicable provisions of 15.5(1) to 15.5(13), except as modified below.

a. A wading pool shall have at least 4 ft of deck.

b. Overflow system.

(1) Intermittent fixed weir overflow structures, including gutters, overflow fixtures, and drains at zero depth may be used. They shall have a hydraulic capacity of at least 125 percent of the recirculation flow rate. The designer shall be responsible for demonstrating that the overflow system will provide adequate skimming.

(2) If skimmers are used, there shall be at least one skimmer for every 500 ft^2 of water surface area or fraction thereof.

1. The recirculation flow rate shall be at least 3.8 gpm per lineal inch of skimmer weir or as required in 15.5(5)*"b,"* whichever is greater.

2. The skimmer(s) suction line may be connected to the main drain line in lieu of an equalizer.

3. A skimmer(s) may be used in combination with overflow drains in a zero-depth wading pool.

c. Inlet system. Inlets shall be designed to uniformly distribute treated water throughout the wading pool. Wall and floor inlets or other means may be used, alone or in combination. The designer shall be respon*s*ible for demonstrating that the inlet system will provide adequate distribution of the treated water.

15.5(15) *Wave pools.* Wave pools shall comply with the applicable provisions of 15.5(1) to 15.5(13), except as modified below.

a. Overflow not required. Perimeter overflow gutters and skimmers are not required on the deep-end wall where the wave generation equipment is located.

b. Overflow drain at zero depth. There shall be an overflow drain or weir across the full width of the zero-depth end of the wave pool. Full width is interpreted to allow construction joints at each end of the drain. The combined length of the joints shall be no more than 10 percent of the width of the end of the pool.

The drain shall be covered with a grate designed to prevent entrapment. The grate shall be designed so that it is securely fastened to the pool floor and cannot be removed without a tool or tools.

c. Deck above zero depth. The deck above the overflow drain at the zero-depth end of the pool may slope to the overflow drain for a distance no greater than 15 ft. The deck slope shall be no greater than 1 ft vertical in 12 ft horizontal.

d. Overflow gutter or fittings. There shall be a perimeter overflow gutter or overflow fittings along both sides of the wave pool where the water is 3 ft deep or more.

(1) If a perimeter overflow gutter is used, it shall be designed to prevent entrapment during wave action. Overflow grates shall be securely fastened so they will not be dislodged by wave action.

(2) Overflow fittings need not be continuous, but they shall be spaced no more than 10 ft apart.

e. Overflow capacity. The combined hydraulic capacity of the overflow drain at zero depth and the gutter or overflow outlets shall be at least 125 percent of the recirculation flow rate.

f. *Main drains.* The main drain system shall comply with the requirements of 15.5(10).

g. *Wave generator openings.* Openings or connections between the wave pool and the wave generation equipment shall be designed to prevent entrapment of users.

h. *Side barrier.* There shall be a continuous barrier along the full length of each side of a wave pool. The barrier shall be at least 42 inches high and installed no more than 3 ft from the side of the wave pool.

i. *Emergency switches.* Emergency switches which will stop the wave action shall be provided in at least four locations on the deck of the wave pool. Switch locations shall be marked by signs or contrasting bright colors.

j. *Float line.* A wave pool shall be equipped with a float line with floats spaced no more than 5 ft apart. The float line shall be located at least 6 ft from the deep-end wall. Users shall not be permitted between the float line and the deep-end wall.

15.5(16) *Zero-depth swimming pools.* Zero-depth swimming pools shall comply with the applicable provisions of 15.5(1) to 15.5(13), except as modified below.

a. *Overflow drain at zero depth.* There shall be an overflow drain or weir across the full width of the zero-depth end of the swimming pool. Full width is interpreted to allow construction joints at each end of the drain. The combined length of the joints shall be no more than 10 percent of the width of the end of the pool.

(1) The drain shall be covered with a grate designed to prevent entrapment. The grate shall be designed so that it is not removable without a tool.

(2) The drain and its associated piping shall be designed to convey at least 50 percent of the recirculation flow rate.

b. *Deck above zero depth.* The deck above the overflow drain at the zero-depth end of the pool may slope to the overflow drain for a distance no greater than 15 ft. The deck slope shall be no greater than 1 ft vertical in 12 ft horizontal.

c. *Perimeter overflow gutter.* If a perimeter overflow gutter is provided, the gutter may be interrupted in the area where the water is less than 2 ft deep provided that:

(1) The length of the perimeter overflow gutter and overflow drain shall be at least 60 percent of the total pool perimeter.

(2) The hydraulic capacity of the perimeter overflow gutter system combined with the overflow drain shall be at least 125 percent of the recirculation flow rate.

d. *Skimmers.* Recessed automatic surface skimmers may be used with the overflow drain at zero depth in accordance with 15.5(9)*"a."* The hydraulic capacity of the skimmer/drain system shall be at least 125 percent of the recirculation flow rate.

15.5(17) *Water slides.* Water slides shall comply with the applicable provisions of 15.5(1) to 15.5(13) and the following:

a. *Flume construction.* A water slide flume shall comply with the following:

(1) The flume shall be perpendicular to the plunge or swimming pool wall for at least 10 ft from the flume end.

(2) The flume shall be sloped no more than 1 ft vertical in 10 ft horizontal for at least 10 ft before the end of the flume.

(3) The flume shall terminate between 6 inches below and 2 inches above the design water level in the plunge pool or swimming pool.

(4) There shall be at least 5 ft between the side of the plunge pool or swimming pool and the side of the flume. Adjacent flumes shall be at least 10 ft apart on center.

(5) The inside surface of a flume shall be smooth and continuous.

(6) The flume shall be designed to ensure that users cannot be thrown out of the flume and to minimize user collisions with the sides of the flume.

(7) The flume shall have no sharp edges within reach of a user while the user is in the proper riding position.

(8) The flume path shall be designed to prevent users from becoming airborne while in the ride.

b. Water slide landing areas. The landing area for a water slide flume shall comply with the following:

(1) The water depth shall be at least 3 ft and no more than 4 ft at the end of the flume and for at least 15 ft beyond the end of the flume.

(2) The landing area floor may slope up to a minimum of 2 ft water depth subject to (1) above. The slope shall be no greater than 1 ft vertical in 12 ft horizontal.

(3) There shall be at least 20 ft between the end of the flume and any barrier or steps.

(4) If the water slide flume ends in a swimming pool, the landing area shall be divided from the rest of the swimming pool by a float line or as approved by the department.

c. Speed slides. A speed slide shall provide for the safe deceleration of the user. A run-out system or a special plunge pool entry system shall control the body position of the user relative to the slide to provide for a safe exit from the ride.

d. Decks. The deck around a water slide plunge pool shall be at least 4 ft wide, except on the side where the flume enters the pool. A walkway which is at least 4 ft wide and meets the requirements of a deck shall be provided between the plunge pool and the slide steps.

e. Alternate overflow systems. Intermittent fixed weir overflow structures may be used for a separate plunge pool if:

(1) Floor inlets are provided according to the requirements of 15.5(8)*"c."*

(2) The hydraulic capacity of the combined overflow structures and the appurtenant piping is at least 125 percent of the recirculation flow rate. The department may require more hydraulic capacity based on the specific design of the plunge pool system.

f. Pump reservoir. If a pump reservoir or surge tank is provided, it shall have a capacity of at least one minute of the combined recirculation and flume flow. Openings between the plunge pool and the pump reservoir or surge tank shall be designed and constructed in accordance with 15.5(10)*"a"* and *"b."*

g. Swimming pool water level. If the water slide flume ends in a swimming pool, the water level shall not be lowered more than 1 inch when the flume pump(s) is operating.

h. Suction outlets. If a fully submerged suction outlet is in a plunge pool or in a swimming pool, it shall be located away from normal water slide user traffic areas. The suction outlet system shall be designed in accordance with 15.5(10)*"b."*

i. Outlet covers. Rescinded IAB 6/3/09, effective 7/8/09.

j. Water slide support structure. The support structure for a water slide and for any access stairs or ramps shall be designed and constructed to withstand the anticipated structural loading, both static and dynamic, including wind forces.

k. Stairs. A stairway providing access to the top of a water slide shall be at least 2 ft wide. Stair surfaces shall be slip-resistant and easily cleanable. The stairway shall comply with the applicable requirements of state and local building codes and Occupational Safety and Health Administration requirements.

l. Alternate water slide designs. Water slides differing substantially from the standards in this subrule may be approved if the designer provides sufficient information to demonstrate to the department that the slide and its landing area can be operated safely.

15.5(18) *Multisection water recreation pools.* A multisection water recreation pool shall comply with the applicable provisions of 15.5(1) to 15.5(13) and the following:

a. Recirculation flow rate. The minimum recirculation flow rate for a multisection water recreation pool shall be determined by computing the recirculation flow rate for each section of the pool in accordance with 15.5(5)*"b"* and adding the flow rates together.

b. Water distribution. The treated water distribution system shall be designed to return treated water to the sections of the pool in proportion to the flow rates determined in *"a"* above.

c. Float lines. Each section of a multisection water recreation pool shall be separated from the other sections by a float line meeting the requirements of 15.5(13)*"f"*(4).

15.5(19) *Spray pads.* A spray pad shall comply with the applicable provisions of 15.5(1) through 15.5(13) and the following:

a. The surface of a spray pad shall be impervious and durable. Padding specifically designed for spray pads may be used with play features. The padding shall be water resistant or shall permit full drainage without retaining water in its structure. Walking surfaces shall be slip-resistant.

b. The spray pad surface shall slope to drain at least 1/8 inch per ft, but no more than 1/2 inch per ft. Deck or other areas outside the spray pad shall not drain into the spray pad.

c. A spray pad shall be exempt from fencing requirements (15.5(13)*"i"*); "No Lifeguard" sign requirements (15.4(6)*"d"*); safety equipment requirements (15.4(4)*"f"*); and depth marking requirements (15.4(4)*"j"*). Unless the spray pad is supervised by facility staff, a sign shall be posted near the spray pad that addresses:

(1) No running on or around the spray pad.

(2) No rough play.

(3) No facility supervision. Parents are responsible for supervising their children.

Facility management may adopt and post other rules deemed necessary for user safety and the proper operation of the spray pad.

d. Spray pad drains shall be gravity outlets. At least two drains shall be provided, or a single drain that is unblockable shall be provided.

(1) The drain system and associated piping shall be designed for 125 percent of the flow into the spray pad (play feature and recirculation, as applicable).

(2) Each drain cover/grate shall be flush with the spray pad surface and shall have no opening wider than ½ inch.

(3) Each drain cover/grate shall be designed to be securely fastened to the spray pad so that the drain cover/grate is not removable without tools.

(4) Drain cover/grates that are exposed to foot traffic shall:

1. Have a slip-resistant surface; and

2. Support a 300-pound concentrated load when tested in accordance with the ASME standard, Section 3.3. Structural strength shall be verified by documentation of test results from a testing agency approved by the department or by certification by an engineer licensed in Iowa; and

3. If the drain cover is exposed to sunlight, be resistant to ultraviolet light (UV) in accordance with the ASME standard, Section 3.2.2. UV resistance shall be verified by documentation of test results from a testing agency approved by the department or by certification by an engineer licensed in Iowa.

e. Spray pads with independent treatment systems.

(1) The minimum volume of water for a spray pad shall be two minutes of the flow of the play features and the recirculation system combined.

(2) The water storage tank shall have a volume of at least 125 percent of the volume specified in (1). The tank shall be accessible for cleaning and inspection.

(3) The recirculation (treatment) system and the play feature pump and piping system shall be separate.

(4) The recirculation system inlet(s) and outlet(s) within the water storage tank shall be designed to ensure a uniform disinfectant concentration and pH level throughout the water volume of the spray pad.

(5) The play feature pump system shall be designed so that it will not operate if the recirculation system is not operating.

(6) There shall be a readily accessible sample tap in the equipment area that allows sampling of the water in the play feature piping.

f. Spray pads using water from an adjacent swimming pool or wading pool.

(1) If there is a suction outlet in the swimming pool or wading pool for the play feature pump(s), the outlet shall be designed as a main drain as specified in 15.5(10). Water velocity through the outlet cover shall be 1½ ft per sec or less.

(2) If the adjacent pool has a volume of 10,000 gallons or less, or if the spray pad water is circulated directly from the swimming pool surge tank, the spray pad pump system shall be equipped for automatic supplemental disinfection in accordance with 15.5(11), except that the disinfection capacity shall be at least one-half of the capacity specified in 15.5(11)*"c"*; with filtration in accordance with 15.5(6); or both.

g. Play features and sprays shall be designed and installed so that they do not create a safety hazard.

(1) Surface sprays shall be flush with the spray pad surface. Spray openings shall have a diameter of ½ inch or less. Noncircular spray openings shall have a width of ½ inch or less.

(2) Aboveground features shall not present a tripping hazard. Features shall have no sharp edges or points and no rough surfaces. Aboveground features shall be constructed of corrosion-resistant materials or provided with a corrosion-resistant coating. Accessible spray openings shall have a diameter of ½ inch or less. Noncircular accessible spray openings shall have a width of ½ inch or less.

15.5(20) *Leisure rivers.* A leisure river shall comply with the applicable requirements of 15.5(1) through 15.5(13) and the following:

a. The leisure river propulsion system and recirculation system shall be separate.

b. Intermittent fixed weir structures may be used for the overflow system. At least two separate fixed weir structures shall be used. The hydraulic capacity of the overflow system using fixed weir structures shall be at least 125 percent of the recirculation flow rate. Fixed weir structures shall be designed to prevent entrapment of leisure river users.

c. A deck as specified in 15.5(4) is not required in areas where users are not permitted. A leisure river and the area on the inside and outside perimeter of the leisure river shall be designed to ensure that lifeguard staff and emergency personnel can access any part of the leisure river quickly and to provide a sufficient hard surface area for emergency functions.

d. The depth of a leisure river shall be posted conspicuously at the entrance(s) to the leisure river in characters at least 3 inches high. The depth of the leisure river shall be marked on the side wall of the leisure river above the static water level at intervals not to exceed 50 ft on center. The depth of the leisure river shall be marked on the deck in the areas where users are permitted. The depth markers shall be within 3 ft of the edge of the leisure river at intervals not to exceed 25 ft on center.

e. "No Diving" characters or graphics shall be marked every 25 ft on center on the deck in deck areas where users are permitted.

f. At least one user egress point shall be provided for each 500 ft of leisure river length (measured at the centerline) or fraction thereof.

g. Outlets for the leisure river propulsion system shall be designed in accordance with 15.5(10)*"b."*

15.5(21) *Showers, dressing rooms, and sanitary facilities.*

a. *Facilities required.* Bather preparation facilities shall be provided at each swimming pool facility except where the swimming pool facility is intended to serve living units such as a hotel, motel, apartment complex, condominium association, dormitory, subdivision, mobile home park, or resident institution.

b. *Swimming pool patron load.* If a bathhouse is provided, the patron load for determining the minimum sanitary fixtures (Table 6) is:

(1) One individual per 15 ft^2 of water surface in shallow areas.

(2) One individual per 20 ft^2 of water surface in deep areas with the exclusion of 300 ft^2 of water surface for each diving board.

(3) For each swimming pool slide, 200 ft^2 shall be excluded, and for each water slide which terminates in the swimming pool, 300 ft^2 shall be excluded in determining the patron load.

c. *Bathhouses.*

(1) A bathhouse shall be designed and constructed to meet the requirements of the local building ordinance. If no local ordinance is in effect, the bathhouse shall be designed to meet the requirements of the state of Iowa building code, 661—Chapter 16, Iowa Administrative Code.

(2) Bathhouse floors shall have a slip-resistant finish and shall slope at least 1/8 inch/ft to drain. Except as provided in 15.5(19)*"c"*(3), floor coverings shall comply with the requirements of 15.5(4)*"c."*

(3) Olefin, or other approved carpeting, may be permitted in locker room or dressing room areas provided:

1. There is an adequate drip area between the carpeting and the shower room, toilet facilities, swimming pool, or other areas where water can accumulate.

2. Drip areas shall be constructed of materials as described in 15.5(4)*"b"* and 15.5(4)*"c."*

(4) Bathhouse fixtures shall be provided in accordance with Table 6.

Table 6
Fixtures Required

	Male				Female		
Patron Load	Showers	Toilets	Urinals	Lavatories	Showers	Toilets	Lavatories
1 - 100	1	1	1	1	1	1	1
101 - 200	2	1	2	1	2	3	1
201 - 300	3	1	3	1	3	4	1
301 - 400	4	2	3	2	4	5	2
401 - 500	5	3	3	2	5	6	2
501 - 1000	6	3	4	2	6	7	2

(5) All indoor swimming pool areas, bathhouses, dressing rooms, shower rooms, and toilets shall be ventilated by natural or mechanical means to control condensation and odors.

d. Showers and lavatories.

(1) Showers shall be supplied with water at a temperature of at least 90°F and no more than 110°F and at a rate of no more than 3 gpm per shower head.

(2) Soap dispensers or bar soap trays shall be provided at each lavatory and in the showers. Glass soap dispensers are prohibited.

e. Hose bibs. At least one hose bib shall be installed within the bathhouse.

f. Storage-type hot water heaters.

(1) Gas-fired storage-type hot water heaters shall comply with the requirements of ANSI/AGA Z21.10.1-2001, or with the requirements of ANSI/AGA Z21.10.3-2001. The heater shall bear the mark of the AGA.

(2) Electric storage-type hot water heaters shall comply with the requirements of ANSI/UL 174-1996. The heater shall bear the mark of UL.

(3) Combustion air shall be provided for fuel-burning water heaters as required by the state plumbing code, 641—Chapter 25, Iowa Administrative Code, or as required by local ordinance.

(4) Fuel-burning water heaters shall be vented as required by the state plumbing code, 641—Chapter 25, Iowa Administrative Code, or as required by local ordinance.

[**ARC 7839B**, IAB 6/3/09, effective 7/8/09]

ADMINISTRATION

641—15.6(135I) Enforcement.

15.6(1) The department may inspect swimming pools and spas regulated by these rules and enforce these rules. A city, county or district board of health may inspect swimming pools and spas regulated by these rules and enforce these rules in accordance with agreements executed with the department pursuant to the authority of Iowa Code chapters 28E and 135I.

15.6(2) The inspection agency shall take the following steps when enforcement of these rules is necessary.

a. Owner notification. As soon as possible after the violations are noted, the inspection agency shall provide written notification to the owner of the facility that:

(1) Cites each section of the Iowa Code or Iowa Administrative Code violated.

(2) Specifies the manner in which the owner or operator failed to comply.

(3) Specifies the steps required for correcting the violation.

(4) Requests a corrective action plan, including a time schedule for completion of the plan.

(5) Sets a reasonable time limit, not to exceed 30 days from the receipt of the notice, within which the owner of the facility must respond.

b. Corrective action plan review. The inspection agency shall review the corrective action plan and approve it or require that it be modified.

c. Failure to comply. When the owner of a swimming pool or spa fails to comply with conditions of the written notice, the inspection agency may take enforcement action in accordance with Iowa Code chapters 137 and 135I, or in accordance with local ordinances.

d. Adverse actions and the appeal process. If the department determines that the provisions of Iowa Code chapter 135I and these rules have been or are being violated, the department may withhold or revoke the registration of a swimming pool or spa, or the department or the local board of health may order that a swimming pool or spa be closed until corrective action has been taken. If the swimming pool or spa is operated without being registered, or in violation of the order of the department, the department or local inspection agency may request that the county attorney or the attorney general make an application in the name of the state to the district court of the county in which the violations have occurred for an order to enjoin the violations. This remedy is in addition to any other legal remedy available to the department.

(1) A local inspection agency may request that the department withhold or revoke the registration of a swimming pool or spa, or issue an order to close a swimming pool or spa. The request shall be in writing and shall list the violations of Iowa Code chapter 135I and these rules that have occurred or are occurring when the request is made. The local inspection agency shall provide a full accounting of the actions taken by the local inspection agency to enforce Iowa Code chapter 135I and these rules.

(2) Notice of the decision to withhold or revoke the registration for a swimming pool or spa, or an order to close a swimming pool or spa shall be delivered by restricted certified mail, return receipt requested, or by personal service. The notice shall inform the owner of the right to appeal the decision and the appeal procedures. The local inspection agency and the county attorney in the county where the swimming pool or spa is located shall be notified in writing of the decision or order.

(3) An appeal of a decision to withhold or revoke a registration or of an order to close shall be submitted by certified mail, return receipt requested, within 30 days of receipt of the department's notice. The appeal shall be sent to the Iowa Department of Public Health, Division of Environmental Health, Lucas State Office Building, 321 East 12th Street, Des Moines, Iowa 50319-0075. If such a request is made within the 30-day time period, the decision or order shall be deemed to be suspended. Prior to or at the hearing, the department may rescind the decision or order upon satisfaction that the reason for the decision or order has been or will be removed. After the hearing, or upon default of the applicant or alleged violator, the administrative law judge shall affirm, modify or set aside the decision or order. If no appeal is submitted within 30 days, the decision or order shall become the department's final agency action.

(4) Upon receipt of an appeal that meets contested case status, the appeal shall be transmitted to the department of inspections and appeals within 5 working days of receipt pursuant to the rules adopted by that department regarding the transmission of contested cases. The information upon which the revocation or withholding is based shall be provided to the department of inspections and appeals.

(5) The hearing shall be conducted in accordance with 481—Chapter 10.

(6) When the administrative law judge makes a proposed decision and order, it shall be served by restricted certified mail, return receipt requested, or delivered by personal service. The proposed decision and order then becomes the department's final agency action without further proceedings 10 days after it is received by the aggrieved party unless an appeal to the director is taken as provided in subparagraph 15.6(2)*"d"*(7).

(7) Any appeal to the director of the department for review of the proposed decision and order of the administrative law judge shall be filed in writing and mailed to the director by certified mail, return receipt requested, or delivered by personal service within 10 days after the receipt of the administrative law judge's proposed decision and order by the aggrieved party. A copy of the appeal shall also be mailed to the administrative law judge. Any request for appeal shall state the reason for appeal.

(8) Upon receipt of an appeal request, the administrative law judge shall prepare the record of the hearing for submission to the director. The record shall include the following:

1. All pleadings, motions and rules.
2. All evidence received or considered and all other submissions by recording or transcript.
3. A statement of all matters officially noticed.

4. All questions and offers of proof, objections, and rulings thereon.
5. All proposed findings and exceptions.
6. The proposed findings and order of the administrative law judge.

(9) The decision and order of the director becomes the department's final agency action upon receipt by the aggrieved party and shall be delivered by restricted certified mail, return receipt requested.

(10) It is not necessary for the owner to file an application for a rehearing to exhaust administrative remedies when appealing to the director or the district court as provided in Iowa Code section 17A.19. The aggrieved party to the final agency action of the department that has exhausted all administrative remedies may petition for judicial review of that action pursuant to Iowa Code chapter 17A.

(11) Any petition for judicial review of a decision and order shall be filed in the district court within 30 days after the decision and order becomes final. A copy of the notice of appeal shall be sent by certified mail, return receipt requested, or by personal service to the Iowa Department of Public Health, Division of Environmental Health, Lucas State Office Building, 321 East 12th Street, Des Moines, Iowa 50319-0075.

(12) The party who appeals a final agency action to the district court shall pay the cost of the preparation of a transcript of the contested case hearing for the district court.

641—15.7(135I) Variances. A variance to these rules may be granted only by the department. A variance can be granted only if sufficient information is provided to substantiate the need for and propriety of the action.

15.7(1) Requests for variances shall be in writing and shall be sent to the local inspection agency for comment. The local inspection agency shall send the request for variance to the department within 15 business days of its receipt.

15.7(2) The granting or denial of a variance will take into consideration, but not be limited to, the following criteria:

a. Substantially equal protection of health and safety shall be provided by a means other than that prescribed in the particular rule, or

b. The degree of violation of the rule is sufficiently small so as not to pose a significant risk of injury to any individual, and the remedies necessary to alleviate this minor violation would incur substantial and unreasonable expense on the part of the person seeking a variance.

15.7(3) Decisions shall be issued in writing by the department and shall include the reasons for denial or granting of the variance. Copies of decisions shall be kept at the department, and a copy shall be sent to the contracting board of health.

15.7(4) The applicant for a variance that is denied may request a review of the denial by the director of the department. The request shall be submitted in writing within 30 days of the applicant's receipt of the department's denial of a variance request. The request for a review shall be addressed to the Iowa Department of Public Health, Office of the Director, Lucas State Office Building, 321 East 12th Street, Des Moines, Iowa 50319-0075. The decision of the director shall be considered the department's final agency action.

15.7(5) The applicant may petition for judicial review of the final agency action pursuant to Iowa Code chapter 17A.

641—15.8(135I) Penalties. A person violating a provision of this chapter shall be guilty of a simple misdemeanor pursuant to the authority of Iowa Code section 135I.5. Each day upon which a violation occurs constitutes a separate violation.

641—15.9(135I) Registration.

15.9(1) *Swimming pool and spa registration.* No swimming pool or spa shall be operated in the state without being registered with the department. The owner of a swimming pool or spa or the owner's designated representative shall register the swimming pool or spa before the swimming pool or spa is first used and shall renew the registration annually on or before April 30. The initial registration and

registration renewal shall be submitted on forms supplied by the department. The registration for a swimming pool or spa is valid from May 1 through the following April 30.

15.9(2) *Change in ownership.* Within 30 days of the change in ownership of a swimming pool or spa, the new owner shall furnish the department with the following information:

a. Name and registration number of the swimming pool or spa.

b. Name, address, and telephone number of new owner.

c. Date the change in ownership took place.

d. A nonrefundable fee of $20 per swimming pool or spa.

15.9(3) *Withholding registration.* The department may withhold or revoke the registration of a swimming pool or spa pursuant to 15.6(2)*"d"* if an owner or the owner's designated representative has violated a provision of Iowa Code chapter 135I or a rule in this chapter.

641—15.10(135I) Training courses.

15.10(1) A training course designed to fulfill the requirements of 641—15.11(135I) shall be reviewed by the department.

15.10(2) At least 15 days prior to the course date, the course director shall submit at a minimum the following to the department:

a. A course outline with a list of instructors and guest speakers and their qualifications.

b. Date or dates the course is to be held.

c. Place the course is to be held.

d. Number of hours of instruction.

e. Course agenda.

15.10(3) The department shall approve or disapprove the course of instruction in writing within 10 business days of receipt of the information required in 15.10(2).

15.10(4) Within 30 business days after the conclusion of the course of instruction, the course director shall furnish the department with the name and address of each person who successfully completed the course.

641—15.11(135I) Swimming pool/spa operator qualifications.

15.11(1) A person designated as a certified operator of a facility for compliance with 15.4(6)*"a"* and 15.51(5)*"a"* shall have successfully completed a CPO® certification course, an AFO certification course, a PPSO certification course, an LAFT certification course, or another course of instruction approved by the department. A copy of a current, valid CPO®, AFO, PPSO, or LAFT certificate for the certified operator shall be maintained in the pool or spa records.

15.11(2) A certified operator with a CPO® certificate, a PPSO certificate, or an LAFT certificate shall attend at least ten hours of continuing education between the original certification date and the first renewal of the certificate, and shall attend at least ten additional hours of continuing education before each subsequent renewal of the certificate. A certified operator with an AFO certificate shall attend at least six hours of continuing education between the original certification date and the first renewal of the certificate, and shall attend at least six additional hours of continuing education before each subsequent renewal of the certificate. The department shall determine the continuing education requirements for a certified operator training course that is approved after May 4, 2005. Proof of continuing education shall be kept with certification records at the facility.

641—15.12(135I) Fees.

15.12(1) *Registration fees.* For each swimming pool or spa, the registration fee is $35. Registration fees are delinquent if not received by the department by April 30 or the first business day thereafter. The owner shall pay a $25 penalty for each month or fraction thereof that the fee is late for each swimming pool or spa that is required to be registered.

15.12(2) *Registration change fees.* For each swimming pool or spa, the fee for a change of ownership, change of facility name, or other change in registration is $20.

15.12(3) *Inspection fees.* The inspection agency shall bill the owner of a facility upon completion of an inspection. Inspection fees are due upon receipt of a notice of payment due.

When the swimming pool is located within the jurisdiction of a local inspection agency, the local inspection agency may establish fees needed to defray the costs of inspection and enforcement under this chapter. Inspection fees billed by a local inspection agency shall be paid to the local inspection agency or its designee.

a. Inspection fee schedule.

Table 7

Swimming Pools and Spas

Pool Type	Inspection Fee
Swimming pool or leisure river, surface area less than 1500 ft^2	$170
Swimming pool or leisure river, surface area 1500 ft^2 or greater	$270
Wave pool	$270
Water slide and plunge pool	$270
Spa	$170
Wading pool less than or equal to 500 ft^2	$50
Wading pool greater than 500 ft^2	$90
Residential swimming pool used for commercial purposes	$50

Table 8

Water Slides

	Inspection Fee
Each additional water slide into a plunge pool	$75
Water slide into a swimming pool	$175
Each additional water slide into a swimming pool	$75

b. Multipool facilities. If more than one pool (swimming pool, water slide, wave pool, wading pool, or spa) is located within a fenced compound or a building, the inspection fee for the pools in the fenced compound or building shall be reduced by 10 percent. This reduction does not apply to the fees specified in Table 8.

c. Special inspection fee. When an inspection agency determines that a special inspection is required, i.e., a follow-up inspection or an inspection generated by complaints, the inspection agency may charge a special inspection fee which shall be based on the actual cost of providing the inspection.

d. Penalty. Unpaid inspection fees will be considered delinquent 45 days after the date of the bill. A penalty of $30 per month or fraction thereof that the payment is delinquent will be assessed to the owner for each pool inspected.

15.12(4) *Plan review fees.*

a. New construction. A plan review fee as specified in Tables 9, 10 and 11 shall be submitted with a construction permit application for each body of water in a proposed facility. If two or more pools share a common recirculation system as specified in 15.5(5)*"a,"* the plan review fee shall be 25 percent less than the total plan review fee required by Tables 9, 10 and 11.

Table 9
Swimming Pools, Wading Pools and Wave Pools

Swimming Pool Area (ft^2)	Plan Review Fee
less than 500	$165
500 to 999	$275
1000 to 1999	$385
2000 to 3999	$550*
4000 and greater	$825*

*This may include one water slide.

Table 10
Water Slides

Description	Plan Review Fee
Water slide and dedicated plunge pool	$550
Each additional water slide into a plunge pool or swimming pool	$165

Table 11
Spas

Spa Volume (gal)	Plan Review Fee
less than 500	$165
500 to 999	$275
1000 +	$385

b. Reconstruction. The plan review fee for reconstruction is $250 for each swimming pool, spa or bathhouse altered in the reconstruction.

c. Penalty for construction without a permit. Whenever any work for which a permit is required has been started before a permit is issued, the plan review fee shall be 150 percent of the fee specified in 15.12(3)*"a"* or *"b."* The department may require that construction not done in accordance with the rules be corrected before a facility is used.

EXCEPTION: After receiving a construction permit application, the department may authorize preliminary construction on a project to start before issuance of a permit. The authorization shall be in writing to the owner or the owner's authorized representative.

15.12(5) *Training fees.* The course sponsor for a training course designed to fulfill the requirements of 641—15.11(135I) shall pay to the department a fee of $20 for each person who successfully completes the course. The fee is due within 30 business days of the completion of the course.

641—15.13(135I) 28E agreements. A city, county or district board of health may apply to the department for authority to inspect swimming pools and spas and enforce these rules.

15.13(1) Application and review process. Applications shall be made to the Iowa Department of Public Health, Swimming Pool Program, Lucas State Office Building, 321 East 12th Street, Des Moines, Iowa 50319-0075.

15.13(2) Each application shall include, at a minimum:

a. A commitment that inspectors will meet the educational requirements of 641—15.11(135I). A person who is a registered sanitarian (R.S.) or a registered environmental health specialist (R.E.H.S.) with the National Environmental Health Association shall be considered to have met the educational requirements of subrule 15.11(2).

b. A statement of the ability of the board of health to provide inspections of all swimming pools and spas within the contracted area.

c. A statement of the ability of the board of health to follow enforcement procedures contained in subrule 15.6(2).

15.13(3) If the department approves the application, the 28E agreement shall be perpetual, subject to the conditions set forth by both parties. The agreement shall include the terms and conditions required by Iowa Code chapter 28E and any additional terms agreed to by the parties.

641—15.14(135I) Application denial or partial denial—appeal.

15.14(1) Denial or partial denial of an application shall be done in accordance with the requirements of Iowa Code section 17A.12. Notice to the applicant of denial or partial denial shall be served by restricted certified mail, return receipt requested, or by personal service.

15.14(2) Any request for appeal concerning denial or partial denial shall be submitted by the aggrieved party, in writing, to the department by certified mail, return receipt requested, within 30 days of the receipt of the department's notice. The address is Iowa Department of Public Health, Swimming Pool Program, Lucas State Office Building, 321 East 12th Street, Des Moines, Iowa 50319-0075. Prior to or at the hearing, the department may rescind the denial or partial denial. If no request for appeal is received within the 30-day time period, the department's notice of denial or partial denial shall become the department's final agency action.

15.14(3) Upon receipt of an appeal that meets contested case status, the appeal shall be forwarded within five working days to the department of inspections and appeals, pursuant to the rules adopted by that agency regarding the transmission of contested cases. The information upon which the adverse action is based and any additional information which may be provided by the aggrieved party shall also be provided to the department of inspections and appeals.

641—15.15 to **15.50** Reserved.

SPAS

641—15.51(135I) Spa operations. A spa shall be operated in a safe, sanitary manner and shall meet the following operational standards.

15.51(1) *Filtration and recirculation.*

a. Filters. A spa shall have a filtration system in good working condition which provides water clarity in compliance with the water quality standards of subrule 15.51(2).

(1) Each filter cartridge shall be replaced with a new, unused, or cleaned and disinfected filter cartridge in accordance with the manufacturer's recommendations for pressure rise at the inlet of the filter, but at least once a month. If a functioning pressure gauge is not present at the filter inlet, the filter cartridge(s) shall be replaced whenever the spa is drained and at least every two weeks. Filter cartridge replacements shall be recorded in the spa records.

(2) Each sand filter serving a spa shall be opened at least annually and the sand media examined for grease buildup, channeling and other deficiencies. The sand shall be cleaned and disinfected before the filter is put back into service. The annual inspection shall be recorded in the spa records.

(3) Each diatomaceous earth filter serving a spa shall be dismantled, and the filter socks and the interior of the filter shall be cleaned and disinfected at least annually. The annual cleaning shall be recorded in the spa records.

(4) The recirculation system shall have an operating pressure gauge located in front of the filter if it is a pressure filter system. A vacuum filter system shall have a vacuum gauge located between the filter and the pump.

b. The recirculation system for a spa shall treat one spa volume of water in 30 minutes or less.

c. Continuous operation required. Pumps, filters, disinfectant feeders, flow indicators, gauges, and all related components of the spa water recirculation system shall be operated continuously whenever the spa contains water, except for cleaning or servicing.

d. Inlets. The recirculation system shall have inlets adequate in design, number, location, and spacing to ensure effective distribution of treated water and maintenance of uniform disinfectant residual throughout the spa.

e. Skimmers. A spa shall have at least one skimmer.

(1) Each skimmer shall have a self-adjusting weir in place and operational.

(2) Each skimmer shall have an easily removable basket or screen upstream from any valve.

f. Wastewater. Wastewater and backwash water from a spa shall be discharged through an air break or an air gap.

g. Water supply. The water supplied to a spa shall be from a water supply meeting the requirements of the department of natural resources for potable water.

(1) Water supplied to a spa shall be discharged to the spa system through an air gap or a reduced-pressure principle backflow device meeting AWWA C-511-97, "Reduced-Pressure Principle Backflow-Prevention Assembly."

(2) Each hose bib at a facility shall be equipped with an atmospheric vacuum breaker or a hose connection backflow preventer.

h. Spa water heaters.

(1) Electric water heaters shall bear the seal of UL.

(2) Gas-fired water heaters shall bear the seal of the AGA and shall be equipped with a pressure relief valve.

(3) Fuel-burning water heaters shall be vented to the outside, in accordance with the Iowa state plumbing code.

(4) Each indoor swimming pool equipment room with fuel-burning water heating equipment shall have one or more openings to the outside of the room for the provision of combustion air.

15.51(2) *Water quality and testing.*

a. Disinfection.

(1) Spa water shall have a free chlorine residual of at least 2.0 ppm and no greater than 8.0 ppm, or a total bromine residual of at least 4.0 ppm and no greater than 18 ppm when the spa is open for use, except as given in Table 12.

(2) A spa shall be closed if the free chlorine is measured to be less than 1.0 ppm or the total bromine is measured to be less than 2.0 ppm.

(3) The spa shall be closed if a free chlorine measurement exceeds 8.0 ppm or if the total bromine measurement exceeds 18 ppm, except as given in Table 12.

(4) If an ORP controller with a readout meeting the requirements of 15.51(2)*"f"*(4) is installed on the spa system, the spa water shall have an ORP of at least 700 mV, but no greater than 880 mV, except as given in Table 12. The spa shall be closed if the ORP is less than 650 mV or greater than 880 mV.

(5) The spa shall be closed if the cyanuric acid concentration in the spa water exceeds 80 ppm. The spa may be reopened when the cyanuric acid concentration is 40 ppm or less.

(6) No cyanuric acid shall be added to an indoor spa after May 4, 2005, except through an existing chemical feed system designed to deliver di-chlor or tri-chlor. No cyanuric acid in any form shall be added to an indoor spa after June 30, 2008.

Table 12

Preferred Operating Range			Acceptable Operating Range		
ORP (mV)	Free Cl (ppm)	Total Br (ppm)	ORP (mV)	Free Cl (ppm)	Total Br (ppm)
700-880	2.0-8.0	4.0-18.0	700-880	1.0-1.8	2.0-3.5
			650-700#	2.0-8.0	4.0-18.0
			650-700†	8.2-10.0	18.5-22.0

If these conditions occur on any 3 consecutive days or on any 5 days within a 7-day period, and the conditions reoccur after the spa is drained and cleaned, the facility management shall evaluate water parameters including, but not limited to, cyanuric acid, pH, combined chlorine, and phosphates (ortho- and total); and other conditions at the spa. The facility management shall modify parameters

and conditions as practical to bring the ORP to a minimum of 700 mV. The evaluation shall be completed within 30 days after the low ORP condition is known to the facility management. A written report of the evaluation shall be kept with the spa records.

† If these conditions occur on any 2 consecutive days or on any 4 days within a 7-day period, the facility management shall drain and clean the spa and notify the inspection agency. If the conditions reoccur after the spa is drained and cleaned, the facility management shall cause the conditions at the spa specified in the previous footnote and the function of the ORP equipment to be investigated by a professional pool service company. A written report detailing source water parameters, spa water parameters, spa design (including information about the installed mechanical and chemical equipment), other conditions affecting the disinfectant concentration and the ORP, and the actions taken to increase ORP relative to the disinfectant residual shall be submitted to the local inspection agency within 30 days after the low ORP condition is known to the facility management.

b. *pH level.* The pH of spa water shall be 7.2 to 7.8.

c. *Water clarity.* A spa shall be closed if the grate openings on drain fittings at or near the bottom of the spa are not clearly visible when the agitation system is off.

d. *Bacteria detection.*

(1) If coliform or *Pseudomonas aeruginosa* bacteria are detected in a sample taken in accordance with 15.51(2)*"e"*(8), the spa shall be drained, cleaned, and disinfected. The spa may reopen, and a check sample shall be taken when the spa water meets the requirements of paragraphs *"a," "b"* and *"c"* above. If coliform or *Pseudomonas aeruginosa* bacteria are detected in the check sample, the spa shall be closed. The spa shall be drained, physically cleaned, and disinfected. The filter(s) shall be cleaned and disinfected.

1. For cartridge filters, the cartridge shall be replaced with a new, unused cartridge or a cleaned, disinfected cartridge; the filter housing shall be physically cleaned, then disinfected.

2. For sand and DE filters, the filter shall be opened and the media and components cleaned and disinfected.

The spa may reopen when no coliform or *Pseudomonas aeruginosa* bacteria are detected in a spa water sample taken when the spa water meets the requirements of paragraphs *"a," "b"* and *"c"* above.

(2) The facility management shall notify the local inspection agency of the positive bacteriological result within one business day after the facility management has become aware of the result.

e. *Test frequency.* The results of the tests required below shall be recorded in the spa records.

(1) The disinfectant residual in the spa water shall be tested or the ORP of the spa water shall be checked each day before the spa is opened for use and at intervals not to exceed two hours thereafter until the spa closing time. For a spa at a condominium complex, an apartment building or a homeowners association with 25 or fewer living units, the disinfectant level in the spa water shall be tested or the ORP of the spa water shall be checked at least twice each day the spa is available for use.

If the spa is equipped with an automatic controller with a readout or local printout of ORP complying with the requirements of 15.51(2)*"f"*(4), the operator may make visual readings of ORP in lieu of manual testing, but the spa water shall be tested manually for disinfectant residual at least twice per day. Both ORP and disinfectant residual shall be recorded when manual testing is done. The operator shall specify in the spa records which results are from the manual tests.

(2) The pH of the spa water shall be tested each day before the spa is opened for use and at intervals not to exceed two hours thereafter until the spa closing time. For a spa at a condominium complex, an apartment building or a homeowners association with 25 or fewer living units, the pH of the spa water shall be tested at least twice each day the spa is available for use.

If the spa is equipped with an automatic controller with a readout or local printout of pH complying with the requirements of 15.51(2)*"f"*(5), the operator may make visual readings of pH in lieu of manual testing, but the spa water shall be tested manually for pH at least twice per day. The operator shall specify in the spa records which results are from the manual tests.

(3) The spa water temperature shall be measured whenever a manual test of the spa water is performed.

(4) If a chlorine compound is used for disinfection, the spa water shall be tested for combined chlorine at least once a day.

(5) If cyanuric acid or a stabilized chlorine is used in a spa, the spa water shall be tested for cyanuric acid at least once a day.

(6) The spa water shall be tested for total alkalinity each time the spa is refilled and at least once in each week that the spa is open for use.

(7) The spa water shall be tested for calcium hardness each time the spa is refilled.

(8) At least once in each month that a spa is open for use, a sample of the spa water shall be submitted to a laboratory certified by the department of natural resources for the determination of coliform bacteria in drinking water. The sample shall be analyzed for total coliform and *Pseudomonas aeruginosa*.

f. Test equipment.

(1) Each facility shall have functional water testing equipment for free chlorine and combined chlorine, or total bromine; pH; total alkalinity; calcium hardness; and cyanuric acid (if cyanuric acid or a stabilized chlorine is used at the facility).

(2) The test equipment shall provide for the direct measurement of free chlorine and combined chlorine from 0 to 10 ppm in increments of 0.2 ppm or less over the full range, or total bromine from 0 to 20 ppm in increments of 0.5 ppm or less over the full range.

(3) The test equipment shall provide for the measurement of spa water pH from 7.0 to 8.0 with at least five increments in that range.

(4) A controller readout used in lieu of manual disinfectant residual testing shall be a numerical analog or digital display (indicator lights are not acceptable) with an ORP scale with a range of at least 600 to 900 mV with increments of 20 mV or less.

(5) A controller readout used in lieu of manual pH testing shall be a numerical analog or digital display (indicator lights are not acceptable) with a range at least as required in 15.51(2)*"f"*(3) with increments of 0.2 or less over the full range.

g. Operator availability. A person knowledgeable in testing water and in operating the water treatment equipment shall be available whenever a spa is open for use.

15.51(3) *Disinfection systems and cleaning.*

a. Disinfectant system.

(1) Equipment for continuous feed of a chlorine or bromine compound to the spa water shall be provided and shall be operational. The equipment shall be adjustable in at least five increments over its feed capacity. Where applicable, the chemical feeder shall be listed by NSF or another listing agency approved by the department for compliance with Standard 50.

(2) The disinfectant equipment shall be capable of providing at least 10 ppm of chlorine or bromine to the spa water based on the recirculation flow rate.

(3) Equipment and piping used to apply any chemicals to the water shall be of such size, design, and material that they may be cleaned. All material used for such equipment and piping shall be resistant to the action of chemicals to be used.

(4) The use of chlorine gas is prohibited.

b. Cleaning and superchlorination.

(1) A spa shall be clean.

(2) A spa containing 500 gal of water or less shall be drained, cleaned and refilled a minimum of once a week. A spa containing over 500 gal to 2000 gal of water shall be drained, cleaned and refilled a minimum of one time every two weeks. A spa with a water volume greater than 2000 gal shall be drained, cleaned and refilled a minimum of one time every three weeks.

The department may permit a longer period between refills for spas over 2000 gal upon evaluation of the use of the spa. Such permission shall be in writing, and a copy shall be available to an inspector upon request.

(3) The inspection agency may require that a spa be drained, cleaned, and superchlorinated prior to further usage.

15.51(4) *Safety.*

a. Chemical safety.

(1) No disinfectant chemical, pH control chemical, algaecide, shock treatment chemical, or any other chemical that is toxic or irritating to humans shall be added to a spa over the top when the spa is occupied. If chemicals are added to the spa over the top, the spa shall not be occupied for a period of

at least 30 minutes. The operator shall test the spa water as appropriate before allowing use of the spa. The chemical addition and the test results shall be recorded in the spa records.

(2) Spa chemicals shall be stored and handled in accordance with the manufacturer's recommendations.

(3) Material safety data sheets (MSDS) for the chemicals used in the spa shall be at the facility in a location known and readily accessible to the facility staff.

(4) Chemical containers shall be clearly labeled.

(5) A chemical hazard warning sign shall be placed at the entrance of a room where chemicals are used or stored or where bulk containers are located.

b. Stairs, ladders, recessed steps, and ramps.

(1) When the top rim of a spa is more than 24 inches above the surrounding floor area, stairs or a ramp shall be provided to the top of the spa.

(2) Stairs, ladders, ladder rungs, and ramps shall be slip-resistant.

(3) Where stairs and ramps are provided, they shall be equipped with a handrail.

(4) Ladders and handrails shall be constructed of corrosion-resistant materials or provided with corrosion-resistant coatings. They shall have no exposed sharp edges.

(5) Ladders, handrails and grabrails shall be securely anchored.

c. Water temperature. Water temperature in the spa shall not exceed 104°F. The spa shall be closed if the water temperature exceeds 104°F.

(1) A thermometer shall be available to measure temperatures in the range of 80° to 120°F.

(2) Water temperature controls shall be accessible only to the spa operator.

d. Emergency telephone. Each facility where lifeguards are not provided shall have a designated emergency telephone or equivalent communication system that can be operated without coins. The communication system shall be available to users of the spa whenever the spa is open. If the emergency communication system is not located within the spa enclosure, management shall post a sign(s) indicating the location of the emergency telephone. Instructions for emergency use of the telephone shall be posted near the telephone.

e. Water level. Water level shall be maintained at the skimming level.

f. Fully submerged outlets. Each fully submerged outlet shall be designed to prevent user entrapment. A spa shall be closed if the cover/grate of a fully submerged outlet is missing or broken.

(1) For a spa constructed prior to May 13, 1998, each pump that draws water directly from a fully submerged outlet shall be connected to two or more outlets or a single outlet with an area of at least 144 in^2.

(2) Each fully submerged outlet shall have a cover/grate that has been tested for compliance with the requirements of the ASME standard by a testing agency approved by the department or that is certified for compliance by an engineer licensed in Iowa.

1. The cover/grate for an outlet system with a single fully submerged outlet shall have a flow rating of at least 100 percent of the maximum system flow rate. The combined flow rating for the cover/grates for an outlet system with more than one fully submerged outlet shall be at least 200 percent of the maximum system flow rate.

The maximum system flow rate is the design flow rate for the pump(s) directly connected to the outlet(s) in an outlet system. In the absence of better information, the maximum system flow rate is the capacity of the pump(s) at 50 feet TDH, based on the manufacturer's published pump curves.

2. Fully submerged outlet cover/grates shall not be removable without the use of tools.

3. Purchase records and product information that demonstrate compliance shall be maintained by the facility for at least five years from the time the cover/grate is purchased. If a field fabricated cover/grate is certified for compliance to the ASME standard by an engineer licensed in Iowa, a copy of the certification letter shall be kept at the facility for at least five years from the certification date.

(3) A spa with a single fully submerged outlet that is not unblockable and that is directly connected to a pump shall be closed if the outlet does not have a cover/grate that complies with the ASME standard.

If a spa has two or more fully submerged outlets on a single surface that are all less than 3 ft apart on center, are not unblockable, and are directly connected to a pump, the spa is considered to have a single fully submerged outlet.

(4) A spa with a single fully submerged outlet that is not unblockable and that is directly connected to a pump shall be closed if the outlet system is not equipped with a safety vacuum release system that is listed for compliance with ASME/ANSI A112.19.17-2002, "Manufactured Safety Vacuum Release Systems (SVRS) for Residential and Commercial Swimming Pool, Spa, Hot Tub, and Wading Pool Suction Systems," by a listing agency approved by the department; or another vacuum release system approved by the department.

1. Purchase records and product information that demonstrate compliance shall be maintained by the facility for at least five years from the time the SVRS is purchased or another approved system is installed.

2. An SVRS shall be installed in accordance with the manufacturer's instructions.

3. An SVRS shall be tested for proper function at the frequency recommended by the manufacturer, but at least once in each month the spa is operated. The date and result of each test shall be recorded.

(5) In lieu of compliance with subparagraphs (2), (3) and (4) above, a fully submerged outlet in a spa may be disabled with the approval of the department, except that an equalizer in a skimmer may be plugged without department approval. The management of the spa shall submit to the department information including, but not necessarily limited to:

1. The area and volume of the spa;

2. Detailed information about the inlet system, including the location of the inlets and the type of inlet fitting;

3. The number of skimmers and pipe sizes;

4. Pump information and flow rates for the outlet system; and

5. Filter type, number of filters, the size of the filter(s), and whether multiple filters are backwashed together or separately.

If the department approves the application to disable the outlet, the outlet valve shall be closed and the valve secured by removing the handle, by locking the handle closed, or by another method approved by the department. The outlet may be physically disconnected from the pump system at the option of the facility management.

g. Spa walls and floor shall be smooth and easily cleanable.

h. Decks.

(1) The deck shall have a slip-resistant surface.

(2) The deck shall be clean and free of debris.

(3) A hose bib shall be provided for flushing or cleaning of the deck.

(4) Glass objects, other than eyeglasses and safety glass doors and partitions, shall not be permitted on the deck.

i. There shall be no underwater or overhead projections or obstructions which would endanger user safety or interfere with proper spa operation.

j. Electrical.

(1) Each electrical outlet in the deck, shower room, and pool water treatment equipment areas shall be equipped with a properly installed ground fault circuit interrupter (GFCI) at the outlet or at the breaker serving the outlet. Electrical outlets energized through an ORP/pH controller are not required to have a separate GFCI if the controller is equipped with a GFCI or is energized through a GFCI breaker. Ground fault circuit interrupter receptacles and breakers shall be tested at least once in each month the spa is operating. Test dates and results shall be recorded in the spa records.

(2) There shall be no outlets located on, or within 5 ft of, the inside wall of a spa.

(3) An air switch within reach of persons in the spa and its connecting tube shall be constructed of materials that do not conduct electricity.

(4) Lighting.

1. Artificial lighting shall be provided at all spas which are to be used at night or which do not have adequate natural lighting so all portions of the spa, including the bottom and main drain, may be readily seen.

2. Underwater lights and fixtures shall be designed for their intended use. When the underwater lights operate at more than 15 volts, the underwater light circuit shall be equipped with a GFCI. When underwater lights need to be repaired, the electricity shall be shut off until repairs are completed.

3. No electrical wiring shall extend over an outdoor spa.

k. Fencing.

(1) A spa shall be enclosed by a fence, wall, building, or combination thereof not less than 4 ft high. The spa enclosure shall be constructed of durable materials. A spa may be in the same room or enclosure as another spa or a swimming pool.

(2) A fence, wall, or other means of enclosure shall have no openings that would allow the passage of a 4-inch sphere, and shall not be easily climbable by toddlers. The distance between the ground and the top of the lowest horizontal support accessible from outside the facility, or between the two lowest horizontal supports accessible from outside the facility, shall be at least 45 inches. A horizontal support is considered accessible if it is on the exterior of the fence relative to the spa, or if the gap between the vertical members of the fence is greater than 1¾ inches.

(3) At least one gate or door with an opening of at least 36 inches in width shall be provided for emergency purposes. When closed, gates and doors shall comply with the requirements of (2) above. Gates and doors shall be lockable. Except where lifeguard supervision is provided whenever the spa is open, gates and doors shall be self-closing and self-latching.

(4) If there are sleeping rooms, apartments, condominiums, or permanent recreation areas which are used by children and which open directly into the spa area, the spa shall be enclosed by a barrier at least 3 ft high. No opening in the barrier shall permit the passage of a 4-inch sphere. The barrier shall not be easily climbable by toddlers. There shall be at least one 36-inch-wide gate or door through the barrier. Gates and doors shall be lockable. Except where lifeguard supervision is provided whenever the spa is open, gates and doors provided shall be self-closing and self-latching.

l. Agitation system control. The agitation system control shall be installed out of the reach of persons in the spa. The "on" cycle for the agitation system shall be no more than ten minutes.

15.51(5) *Management, notification, and records.*

a. *Certified operator required.* Each spa facility shall employ a certified operator. One certified operator may be responsible for a maximum of three facilities.

b. *Spa rules sign.* A "Spa Rules" sign shall be posted near the spa. The sign shall include the following stipulations:

(1) Persons with a medical condition, including pregnancy, should not use the spa without first consulting with a physician.

(2) Anyone having a contagious disease shall not use the spa.

(3) Persons shall not use the spa immediately following exercise or while under the influence of alcohol, narcotics, or other drugs.

(4) Persons shall not use the spa alone or without supervision.

(5) Children shall be accompanied by an adult.

(6) Persons shall not use the spa longer than ten minutes.

(7) No one shall dive or jump into the spa.

(8) The maximum patron load of the spa. (The maximum patron load of a spa is one individual per 2 lineal ft of inner edge of seat or bench.)

c. *Spa depth.* The maximum depth of a spa shall be posted at a conspicuous location near the spa in numerals or letters at least 3 inches high.

d. *Glass prohibited.* Glass objects other than eyeglasses, safety glass doors, and partitions shall not be permitted in a spa enclosure.

e. *Operational records.* The operator of a spa shall have the spa operational records for the previous 12 months at the facility and shall make these records available when requested by a swimming pool/spa inspector. These records shall contain a day-by-day account of spa operation, including:

(1) ORP and pH readings, results of pH, free chlorine or total bromine residual, cyanuric acid (if used), combined chlorine, total alkalinity, and calcium hardness tests, and any other chemical test results.

(2) Results of microbiological analyses.

(3) Water temperature measurements.

(4) Reports of complaints, accidents, injuries, or illnesses.

(5) Dates and quantities of chemical additions, including resupply of chemical feed systems.

(6) Dates when filters were backwashed or cleaned or a filter cartridge(s) was changed.

(7) Draining and cleaning of spa.

(8) Dates when ground fault circuit interrupter receptacles or circuit breakers were tested.

(9) Dates of review of material safety data sheets.

(10) If applicable, dates and results of tests of each SVRS installed at a facility.

f. *Submission of records.* An inspection agency may require facility management to submit copies of readings of ORP and pH, chemical test results and microbiological analyses to the inspection agency on a monthly basis. The inspection agency shall notify the facility management of this requirement in writing at least 15 days before the reports are to be submitted for the first time. The facility management shall submit the required reports to the inspection agency within 10 days after the end of each month of operation.

g. *Operations manual.* A permanent manual for operation of a spa shall be at the facility. The manual shall include instructions for routine operations at the spa including, but not necessarily limited to:

(1) Maintaining the chemical supply for the chemical feed systems.

(2) Filter backwash or cleaning.

(3) Water testing procedures, including the required frequency of testing.

(4) Procedures for draining, cleaning and refilling the spa, including chemical adjustments and controller adjustments.

(5) Controller sensor maintenance, where applicable.

(6) Superchlorination.

h. *Schematic drawing.* A schematic drawing of the spa recirculation system shall be posted in the swimming pool filter room or shall be in the operations manual. Clear labeling of the spa piping with flow direction and water status (unfiltered, treated, backwash) may be substituted for the schematic drawing.

i. *Material safety data sheets.* Copies of material safety data sheets (MSDS) for the chemicals used at the spa shall be kept at the facility in a location known and readily accessible to facility staff with chemical-handling responsibilities. Each member of the facility staff with chemical-handling responsibilities shall review the MSDS at least annually. The facility management shall retain records of the MSDS reviews at the facility and shall make the records available upon request by a swimming pool inspector.

j. *Emergency plans.* A written emergency plan shall be provided. The plan shall include, but may not be limited to, actions to be taken in cases of drowning, hyperthermia, serious illness or injury, chemical-handling accidents, weather emergencies, and other serious incidents. The emergency plan shall be reviewed with the facility staff at least once a year, and the dates of review or training shall be recorded. The written emergency plan shall be kept at the facility and shall be available to a swimming pool inspector upon request.

k. *Temporary spas.*

(1) A person offering temporary spas for rent shall be a certified operator.

(2) Records of temporary spas shall be maintained for one year which identify the location of all installations.

(3) Written operational instructions shall be provided to individuals operating or leasing a spa. The instructions shall be consistent with this chapter and provide guidance in the following areas:

1. Acceptable sources of water supply and procedure for cross-connection control—15.51(1)*"g."*

2. Methods for routine cleaning and superchlorination—15.51(3)*"b."*

3. Procedures for maintaining prescribed levels of disinfectant residual, pH, total alkalinity, clarity, and microbiological quality, and using the test kit—15.51(2)*"a"* to 15.51(2)*"f."*

4. Procedures for maintaining temperature and operation of temperature controls—15.51(4)*"c."*

5. Warning to prevent electrical hazards—15.51(4)*"j."*

6. Procedures for operation of filters, including backwashing—15.51(1)*"a."*

7. A warning to the renter that the renter should prevent unauthorized or accidental access to a spa when it contains water.

15.51(6) *Reports.* Spa operators shall report to the local inspection agency, within one working day of occurrence, all deaths; near drowning incidents; head, neck, and spinal cord injuries; and any injury which renders a person unconscious or requires immediate medical attention.

[**ARC 7839B**, IAB 6/3/09, effective 7/8/09]

641—15.52(135I) Construction and reconstruction. A spa constructed or reconstructed after May 4, 2005, shall comply with the following standards. Nothing in these rules is intended to exempt spas and associated structures from any applicable federal, state or local laws, rules or ordinances. Applicable requirements include, but are not limited to, the handicapped access and energy requirements of the state building code, the fire and life safety requirements of the state fire marshal, the rules of the department of workforce development, and the rules of the department of natural resources.

15.52(1) *Construction permits.*

a. Permit required. No spa shall be constructed or reconstructed without the owner or a designated representative of the owner first receiving a permit from the department. Construction shall be completed within 24 months from the date the construction permit is issued unless a written extension is granted by the department.

b. Permit application. The owner of a proposed or existing spa or a designated representative of the owner shall apply for a construction permit on forms provided by the department. The application shall be submitted to the department at least 15 days prior to construction of a new spa or the reconstruction of a spa.

c. Plan submission. Three sets of plans and specifications shall be submitted with the application. A nonrefundable plan review fee shall be remitted with the application for each spa as required in 15.12(4).

d. Notification of completion. The owner of a newly constructed or reconstructed facility or the owner's designated representative shall notify the department in writing at least 15 business days prior to opening the spa.

15.52(2) *Plans and specifications.*

a. Plan certification. Plans and specifications shall be sealed and certified in accordance with the rules of the engineering and land surveying examining board or the architectural examining board by an engineer or architect licensed to practice in Iowa.

(1) This requirement may be waived by the department if the project is the addition or replacement of a chemical feed system, including a disinfection system, or a simple replacement of a filter or pump or both.

(2) If the requirement for engineering plans is waived, the owner of the spa assumes full responsibility for ensuring that the construction or reconstruction complies with these rules and with any other applicable federal, state and local laws, rules, and ordinances.

b. Content of plans. Plans and specifications shall contain sufficient information to demonstrate to the department that the proposed spa will meet the requirements of this chapter. The information shall include, but may not be limited to:

(1) The name and address of the owner and the name, address, and telephone number of the architect or engineer responsible for the plans and specifications. If a contractor applies for a construction permit, the name, address and telephone number of the contractor shall be included.

(2) The location of the project by street address or other legal description.

(3) A site plan showing the spa in relation to buildings, streets, any swimming pool within the same general area, water and sewer service, gas service, and electrical service.

(4) Detailed scale drawings of the spa and its appurtenances, including a plan view and cross sections at a scale of ¼ inch per foot or larger. The location of inlets, overflow system components,

main drains, deck and deck drainage, the location and size of spa piping, and the spa steps and handrails shall be shown.

(5) A drawing(s) showing the location, plan, and elevation of filters, pumps, chemical feeders, ventilation devices, and heaters, and additional drawings or schematics showing operating levels, backflow preventers, valves, piping, flow meters, pressure gauges, thermometers, the make-up water connection, and the drainage system for the disposal of filter backwash water.

(6) Plan and elevation drawings of bathhouse facilities including dressing rooms; lockers; showers, toilets and other plumbing fixtures; water supply and drain and vent systems; gas service; water heating equipment; electrical fixtures; and ventilation systems, if provided.

(7) Complete technical specifications for the construction of the spa, for the spa equipment and for the spa appurtenances.

c. *Deviation from plans.* No deviation from the plans and specifications or conditions of approval shall be made without prior approval of the department.

15.52(3) *General design.*

a. Materials. A spa shall be constructed of materials which are inert, stable, nontoxic, watertight, and durable.

b. Water depth. The maximum water depth for a general use spa shall not exceed 4 ft measured from the overflow level of the spa. The maximum depth of any seat or sitting bench shall not exceed 2 ft measured from the overflow level. A special-use spa may be deeper than 4 ft with written approval from the department.

c. Structural loading. A spa shall be designed and constructed to withstand anticipated structural loading for both full and empty conditions.

d. Distance from a swimming pool. A spa may be immediately adjacent to a swimming pool, or a minimum of 4 ft from a Class B swimming pool or 6 ft from a Class A swimming pool. The distance shall be measured from the outside edge of a ladder support or handrail on the deck, a lifeguard stand, a swimming pool slide, or a similar obstruction.

e. Water supply. The water supplied to a spa shall be from a source meeting the requirements of the department of natural resources for potable water.

(1) Water supplied to a spa shall be discharged to the spa system through an air gap or a reduced-pressure principle backflow device complying with the requirements of AWWA C-511-97, "Reduced-Pressure Principle Backflow-Prevention Assembly."

(2) Each hose bib at a facility shall be equipped with an atmospheric vacuum breaker or a hose connection backflow preventer.

f. Sewer separation required. No part of a spa recirculation system may be directly connected to a sanitary sewer. An air break or an air gap shall be provided.

g. Operations manual. The owner shall require that a permanent manual for operation of a spa be provided. The manual shall include, but may not be limited to:

(1) Instructions for routine operations at the spa including, but not necessarily limited to:

1. Filter backwash or cleaning.
2. Maintaining the chemical supply for the chemical feed systems.
3. Vacuuming and cleaning the spa.
4. Spa water testing procedures, including the frequency of testing.
5. Superchlorination.
6. Controller sensor maintenance and calibration, including the recommended frequency of maintenance.

(2) For each centrifugal pump, a pump performance curve plotted on an 8½″ × 11″ or larger sheet.

(3) For each chemical feeder, the maximum rated output listed in weight per time or volume per time units.

(4) Basic operating and maintenance instructions for spa equipment that requires cleaning, adjustment, lubrication, or parts replacement, with recommended maintenance frequencies or the parameters that would indicate a need for maintenance.

h. A schematic drawing of the spa recirculation system shall be posted in the spa filter room or shall be included in the operations manual. Clear labeling of the spa piping with flow direction and water status (unfiltered, treated, backwash) may be substituted for the schematic drawing.

i. A permanent file containing the operations and maintenance manuals for the equipment installed at the spa shall be established. The file shall include a source for parts or maintenance for the equipment at the spa. The file may be located in a location other than the facility, but the file shall be readily available to the facility management and maintenance staff.

15.52(4) *Decks.* A spa shall have a deck around at least 50 percent of the spa perimeter. The deck shall be at least 4 ft wide.

a. Deck materials. The deck shall be constructed of stable, nontoxic, and durable materials.

b. Deck drainage. The deck shall drain away from the spa at a slope of at least 1/8 inch/ft, but no more than 1/2 inch/ft to deck drains or to the surrounding ground surface. The deck shall be constructed to eliminate standing water.

c. Deck surface. The deck shall be provided with a slip-resistant, durable, and cleanable surface.

d. Deck covering. A deck covering may be used provided that:

(1) The covering allows drainage so that the covering and the deck do not remain wet or retain moisture.

(2) The covering is inert and will not support bacterial growth.

(3) The covering provides a slip-resistant surface.

(4) The covering is durable and cleanable.

e. Steps or ramp required. When the top rim of a spa is more than 24 inches above the surrounding floor area, stairs or a ramp shall be provided to the top of the spa. Stairs or a ramp shall be designed in accordance with the state building code or the building code adopted by the jurisdiction in which the spa is located.

15.52(5) *Recirculation.*

a. Separate recirculation required. A spa shall have a recirculation system separate from another spa or any swimming pool.

b. Recirculation flow rate. The recirculation system shall be capable of processing one spa volume of water within 30 minutes. For spas with skimmers, the recirculation flow rate shall be at least 3.8 gpm per lineal inch of skimmer weir or the flow rate required above, whichever is greater.

c. Recirculation pump. The recirculation pump(s) shall be listed by NSF or by another listing agency approved by the department as complying with the requirements of Standard 50 and shall comply with the following requirements:

(1) The pump(s) shall supply the recirculation flow rate required by 15.52(5)*"b"* at a TDH of at least that given in "1," "2" or "3" below, unless a lower TDH is shown by the designer to be hydraulically appropriate. A valve for regulating the rate of flow shall be provided in the recirculation pump discharge piping.

1. 40 feet for vacuum filters; or
2. 60 feet for pressure sand filters; or
3. 70 feet for pressure diatomaceous earth filters or cartridge filters.

(2) A separate pump or pumps shall be provided for the spa agitation system.

(3) For sand filter systems, the pump and filter system shall be designed so that each filter can be backwashed at a rate of at least 15 gpm/ft^2 of filter area.

(4) If a pump is located at an elevation higher than the spa water surface, it shall be self-priming or the piping shall be arranged to prevent the loss of pump prime when the pump is stopped.

(5) Where a vacuum filter is used, a vacuum limit control shall be provided on the pump suction line. The vacuum limit switch shall be set for a maximum vacuum of 18 in Hg.

(6) A compound vacuum-pressure gauge shall be installed on the pump suction line as close to the pump as practical. A vacuum gauge may be used for pumps with suction lift. A pressure gauge shall be installed on the pump discharge line as close to the pump as practical. Gauges shall be of such a size and located so that they may be easily read by the operator.

(7) On pressure filter systems, a hair and lint strainer shall be installed on the suction side of the recirculation pump. The hair and lint strainer basket shall be readily accessible for cleaning, changing, or inspection. A spare strainer basket shall be provided. This requirement may be waived for systems using vertical turbine pumps or pumps designed for solids handling.

d. *Spa water heater.*

(1) A heating coil, pipe or steam hose shall not be installed in a spa.

(2) Gas-fired spa water heaters shall comply with the requirements of ANSI/AGA Z21.56-2001, ANSI/AGA Z21.56a-2004, and ANSI/AGA Z21.26b-2004. The data plate of the heater shall bear the AGA mark.

(3) Electric spa water heaters shall comply with the requirements of UL 1261 and shall bear the UL mark.

(4) A spa water heater with an input of greater than 400,000 BTU/hour (117 kilowatts) shall have a water heating vessel constructed in accordance with ASME Boiler Code, Section 8. The data plate of the heater shall bear the ASME mark.

(5) A thermometer shall be installed in the piping to measure the temperature of the water returning to the spa. The thermometer shall be located so that it may be read easily by an operator.

(6) Combustion air shall be provided for fuel-burning water heaters as required by the state plumbing code, 641—Chapter 25, Iowa Administrative Code, or as required by local ordinance.

(7) Fuel-burning water heaters shall be vented as required by the state plumbing code, 641—Chapter 25, Iowa Administrative Code, or as required by local ordinance.

(8) Fuel-burning water heaters shall be equipped with a pressure relief valve sized for the energy capacity of the heater.

e. *Flow meters.*

(1) Each spa recirculation system shall be provided with a permanently installed flow meter to measure the recirculation flow rate.

(2) A flow meter shall be accurate within 5 percent of the actual flow rate between ±20 percent of the recirculation flow rate specified in 15.52(5)*"b"* or the nominal recirculation flow rate specified by the designer.

(3) A flow meter shall be installed on a straight length of pipe with sufficient clearance from valves, elbows or other sources of turbulence to attain the accuracy required by 15.52(5)*"e"*(2). The flow meter shall be installed so that it may be easily read by the facility staff, or a remote readout of the flow rate shall be installed where it may be easily read by the staff. The designer may be required to provide documentation that the installation meets the requirements of subparagraph (2).

15.52(6) *Filtration.* A filter shall be listed by NSF or by another listing agency approved by the department as complying with the requirements of Standard 50 and shall comply with the following requirements:

a. Pressure gauges. Each pressure filter shall have a pressure gauge on the inlet side. Gauges shall be of such a size and located so that they may be read easily by the operator. A differential pressure gauge which gives the difference in pressure between the inlet and outlet of the filter may be used in place of a pressure gauge.

b. Air relief valves. An air relief valve shall be provided for each pressure filter.

c. Backwash water visible. Backwash water from a pressure filter shall discharge through an observable free fall, or a sight glass shall be installed in the backwash discharge line.

d. Backwash water discharge. Backwash water shall be discharged indirectly to a sanitary sewer or another point of discharge approved by the department of natural resources.

e. Rapid sand filter.

(1) The filtration rate shall not exceed 3 gpm/ft^2 of filter area.

(2) The backwash rate shall be at least 15 gpm/ft^2 of filter area.

f. High-rate sand filter.

(1) The filtration rate shall not exceed 15 gpm/ft^2 of filter area.

(2) The backwash rate shall be at least 15 gpm/ft^2 of filter area.

(3) If more than one filter tank is served by a pump, the designer shall demonstrate that backwash flow rate to each filter tank meets the requirements of subparagraph (2), or an isolation valve shall be installed at each filter tank to permit each filter to be backwashed individually.

g. Vacuum sand filter.

(1) The filtration rate shall not exceed 15 gpm/ft^2 of filter area.

(2) The backwash rate shall be at least 15 gpm/ft^2 of filter area.

(3) An equalization screen shall be provided to evenly distribute the filter influent over the surface of the filter sand.

(4) Each filter system shall have an automatic air-purging cycle.

h. Sand filter media shall comply with the filter manufacturer's specifications.

i. Diatomaceous earth filters.

(1) The filtration rate shall not be greater than 1.5 gpm/ft^2 of effective filter area except that a maximum filtration rate of 2.0 gpm/ft^2 may be allowed where continuous body feed is provided.

(2) Diatomaceous earth filter systems shall have piping to allow recycling of the filter effluent during precoat.

(3) Waste diatomaceous earth shall be discharged to a sanitary sewer or other point of discharge approved by the department of natural resources. The discharge may be subject to the requirements of the local waste water utility.

j. Cartridge filters.

(1) The filtration rate shall not exceed 0.38 gpm/ft^2.

(2) A duplicate set of cartridges shall be provided.

k. Other filter systems may be used if approved by the department.

15.52(7) *Piping.*

a. *Piping standards.* Spa piping shall conform to applicable nationally recognized standards and shall be specified for use within the limitations of the manufacturer's specifications. Spa piping shall comply with the applicable requirements of NSF/ANSI Standard 61, "Drinking Water System Components—Health Effects." Plastic pipe shall comply with the requirements of NSF/ANSI Standard 14, "Plastic Piping Components and Related Materials," for potable water pipe.

b. *Pipe sizing.* Spa recirculation piping shall be sized so that water velocities do not exceed 6 ft/sec for suction flow and 10 ft/sec for pressure flow.

c. *Skimmer pipe capacity.* The piping for the skimmer system shall be designed to convey 100 percent of the recirculation flow rate.

d. *Main drain pipe capacity.* The main drain piping shall be designed to convey 100 percent of the recirculation flow rate. If the spa agitation system uses the same suction piping as the recirculation system, the piping shall be designed for the combined flow within the requirements of paragraph *"b"* above.

e. *Separate piping required.* The piping from the spa agitation system pump to the spa shall be separate from the recirculation system piping.

15.52(8) *Inlets.*

a. Wall inlets shall be provided for a spa.

b. The inlets shall be adequate in design, number, location, and spacing to ensure effective distribution of treated water and the maintenance of a uniform disinfectant residual throughout the spa. At least two recirculation inlets shall be provided.

(1) Inlets shall be located at least 6 inches below the design water surface.

(2) Inlets shall be directional flow-type inlets. Each inlet shall have a fitting with an opening of 1 inch diameter or less.

c. Each agitation system opening shall have a fitting with an opening of 1 inch diameter or less.

15.52(9) *Skimmers.* A recessed automatic surface skimmer shall be listed by NSF or by another listing agency approved by the department as complying with the requirements of Standard 50, except that an equalizer is not required for a skimmer installed in a spa equipped with an automatic water level maintenance device.

a. Skimmers required. A spa shall have at least one skimmer for each 100 ft^2 of surface area or fraction thereof.

b. Flow-through skimmers. Each skimmer shall be designed for a flow-through rate of at least 3.8 gpm per lineal inch of weir. The combined capacity of all skimmers in a spa shall not be less than the total recirculation rate.

c. Skimmer weirs. Skimmers shall have weirs that adjust automatically to variations in water level of at least 4 inches.

d. Flow control. Skimmers shall be equipped with a device to control flow through the skimmer.

e. Equalizers. If a spa is not equipped with an automatic water level maintenance device, each skimmer shall have an operational equalizer. The equalizer opening in the spa shall be covered with a fitting listed by a listing agency approved by the department as meeting the requirements of the ASME standard.

f. The skimmer(s) shall not be connected to the agitation system.

15.52(10) *Main drain system.* Each spa shall have a convenient means of draining the water from the spa for service. Spa main drains may be on the sidewall of a spa near the spa bottom.

a. Suction outlets. If a spa pump is directly connected to a main drain or another fully submerged outlet, the pump shall be connected to two or more fully submerged outlets or to a single fully submerged outlet that is unblockable. The recirculation system and the agitation system may use the same fully submerged outlet(s).

(1) Two fully submerged outlets that are directly connected to one or more pumps in the same outlet system shall be at least 3 ft apart on center or on different spa surfaces. If three or more fully submerged outlets that are all directly connected to one or more pumps in the same outlet system are installed, the distance between the outlets farthest apart shall be at least 3 ft on center or the outlets shall be installed on different spa surfaces.

(2) If there is only one fully submerged outlet in an outlet system, the flow rating of the outlet cover/grate, sump and the associated piping shall be at least 100 percent of the maximum system flow rate. If two or more fully submerged outlets are installed in an outlet system, the combined flow rating of the cover/grates, the sumps and the associated piping shall be at least 200 percent of the maximum system flow rate. Multiple outlets in an outlet system shall be plumbed in parallel.

The maximum system flow rate for the recirculation system is the flow rate specified in 15.52(5)*"b"* or the design flow rate, whichever is greater. The maximum system flow rate for the agitation system is the specified design flow rate. If a flow rate is not specified, the maximum system flow rate shall be the flow capacity of the pump(s) at 50 feet TDH, based on the manufacturer's published pump curves.

b. Control valve. If a main drain is connected to the recirculation system, there shall be a control valve to adjust the flow between the main drain and the overflow system.

c. Main drain covers. Each main drain or other fully submerged outlet shall be covered with a cover/grate that is listed as complying with the requirements of the ASME standard by a listing agency approved by the department. A listed cover/grate shall be used in accordance with its listing.

(1) The flow rating for the cover/grate(s) shall comply with 15.52(10)*"a"*(2).

(2) The mark of a listing agency acceptable to the department shall be permanently marked on the top surface of each manufactured cover/grate.

(3) Field fabricated cover/grates shall be certified for compliance to the ASME standard by a professional engineer licensed in Iowa. A certificate of compliance shall be provided to the spa owner and to the department.

(4) The fully submerged outlet cover/grate shall be designed to be securely fastened to the spa so that the cover/grate is not removable without tools.

d. For outlet systems with manufactured sumps, the sumps shall be listed by a listing agency acceptable to the department for compliance with the ASME standard. Field fabricated sumps shall be designed in accordance with the ASME standard and shall be certified by an engineer licensed in Iowa.

15.52(11) *Disinfection and pH control.*

a. Controller required. A spa recirculation system shall be equipped with an automatic controller for maintenance of the disinfectant level and pH in the spa water. The control output of the controller to

the chemical feed systems shall be based on the continuous measurement of the ORP and the pH of the water in the spa recirculation system.

b. No disinfection system designed to use di-chlor or tri-chlor shall be installed for an indoor spa after May 4, 2005.

c. Disinfection system. A continuous feed disinfectant system shall be provided. The disinfectant feed system shall have the capacity to supply at least 10 mg/L chlorine or bromine based on the recirculation flow rate required in 15.52(5)*"b."*

d. Disinfection feeder listing. A disinfectant feeder shall be listed by NSF or by another listing agency approved by the department as complying with the requirements of Standard 50.

e. Gas chlorine shall not be used as a disinfectant for a spa.

f. Solution feed. Where a metering pump is used to feed a solution of disinfectant, the disinfectant solution container shall have a capacity of at least one day's supply at the rate specified in 15.52(11)*"c."*

g. Erosion chlorine feeders. The storage capacity of an erosion feeder shall be at least one day's supply of disinfectant at the rate specified in 15.52(11)*"c."*

h. pH chemical system. Each spa shall have a metering pump for the addition of a pH control chemical to the spa recirculation system, or a carbon dioxide (CO_2) gas feed system. A metering pump shall be listed by NSF or another listing agency approved by the department as complying with the requirements of Standard 50.

i. Chemical feed stop. The chemical feed systems shall be designed so that chemical feed is automatically and positively stopped when the recirculation flow is interrupted.

j. Test equipment. Test equipment complying with the following requirements shall be provided.

(1) The test equipment shall provide for the direct measurement of free chlorine and combined chlorine from 0 to 10 ppm in increments of 0.2 ppm or less over the full range, or total bromine from 0 to 20 ppm in increments of 0.5 ppm over the full range.

(2) The test equipment shall provide for the measurement of spa water pH from 7.0 to 8.0 with at least five increments in that range.

(3) The test equipment shall provide for the measurement of total alkalinity and calcium hardness with increments of 10 ppm or less.

(4) The test equipment shall provide for the measurement of cyanuric acid from 30 to 100 ppm. This requirement may be waived for a facility that does not use cyanuric acid or a stabilized chlorine disinfectant.

15.52(12) *Safety.*

a. *Spa entry.* A spa shall have at least one stairway, ramp, ladder, or set of recessed steps designating a point of entry and exit for every 50 ft of perimeter or fraction thereof.

(1) Stair steps leading into a spa shall be at least 12 inches wide, the tread depth shall be no less than 10 inches, and the riser height shall be no more than 12 inches. If a bench or seat is used as a part of the stair, the first riser height from the bottom of the spa to the seat or bench shall be no more than 14 inches. Except for the first riser, the riser height shall be uniform.

1. Stair steps shall be provided with a slip-resistant surface.

2. The stair steps shall be provided with two handrails or grab rails, one on each side of the steps.

(2) Ladders.

1. Ladders shall be provided with a handrail which extends from below the water surface to the top surface of the deck on each side of the ladder.

2. Ladders shall be of a color contrasting with the spa walls.

(3) Recessed steps.

1. Recessed steps shall have a tread depth of at least 5 inches, a tread width of at least 12 inches, and a uniform rise of no more than 12 inches.

2. Recessed steps shall be provided with a handrail or with deck-level grab rails on each side of the recessed steps.

3. Recessed steps shall drain to the spa.

(4) Handrails and grab rails.

1. Ladders, handrails, and grab rails shall be designed to be securely anchored and so that tools are required for their removal.

2. Ladders, handrails, and grab rails shall be of corrosion-resistant materials, or provided with corrosion-resistant coatings. They shall have no exposed sharp edges.

b. Agitation system control. The agitation system start control shall be installed out of the reach of persons in the spa. The "on" cycle for the agitation system shall be no more than ten minutes.

c. Electrical. New construction or reconstruction shall comply with the requirements of the National Electrical Code, 70-2005, as published by the National Fire Protection Association, Batterymarch Park, Quincy, MA 02269.

d. Lighting. Artificial lighting shall be provided at indoor spas and at outdoor spas which are to be used after sunset, in accordance with the following:

(1) Underwater lighting of at least 60 lamp lumens/ft^2 or 0.5 watts/ft^2 of water surface area and area lighting of at least 10 lumens/ft^2 or 0.6 watts/ft^2 of deck area.

(2) If underwater lights are not provided, overhead lighting of at least 30 lumens/ft^2 or 2.0 watts/ft^2 of spa water surface area shall be provided.

e. Spa enclosure.

(1) A spa shall be enclosed by a fence, wall, building, or combination thereof not less than 4 ft high. The spa enclosure shall be constructed of durable materials. A spa may be in the same room or enclosure as another spa or a swimming pool.

(2) A fence, wall, or other means of enclosure shall have no openings that would allow the passage of a 4-inch sphere, and shall not be easily climbable by toddlers. The distance between the ground and the top of the lowest horizontal support accessible from the outside of the facility, or between the two lowest horizontal supports accessible from outside the facility, shall be at least 45 inches. A horizontal support is considered accessible if it is on the exterior of the fence relative to the spa, or if the gap between the vertical members of the fence is greater than 1¾ inches.

(3) At least one gate or door with an opening of at least 36 inches in width shall be provided for emergency purposes. When closed, gates and doors shall comply with the requirements of (2) above. Gates and doors shall be lockable. Except where lifeguard or structured program supervision is provided whenever the spa is open, gates and doors shall be self-closing and self-latching.

(4) For indoor spas, if there are sleeping rooms, apartments, condominiums, or permanent recreation areas used by children which open directly into the spa area, the spa shall be enclosed by a barrier at least 3 ft high. No opening in the barrier shall permit the passage of a 4-inch sphere. There shall be at least one 36-inch-wide gate or door through the barrier. Gates and doors shall be lockable. Except where lifeguard supervision is provided whenever the spa is open, gates or doors shall be self-closing and self-latching.

[**ARC 7839B**, IAB 6/3/09, effective 7/8/09]

These rules are intended to implement Iowa Code chapter 135I.

[Filed prior to 7/1/52]

[Filed emergency 7/11/86 after Notice 6/4/86—published 7/30/86, effective 7/11/86]

[Filed emergency 5/15/87 after Notice 3/25/87—published 6/3/87, effective 5/15/87]

[Filed emergency 7/10/87—published 7/29/87, effective 7/10/87]

[Filed 1/12/90, Notices 11/1/89◊—published 2/7/90, effective 3/14/90]

[Filed 1/15/93, Notice 10/14/92—published 2/3/93, effective 3/10/93]

[Filed emergency 3/10/93—published 3/31/93, effective 3/10/93]

[Filed emergency 7/16/93—published 8/4/93, effective 7/16/93]

[Filed 3/18/98, Notice 1/28/98—published 4/8/98, effective 5/13/98]

[Filed 9/17/99, Notice 6/16/99—published 10/6/99, effective 11/10/99]

[Filed 3/11/05, Notice 2/2/05—published 3/30/05, effective 5/4/05]

[Filed 1/10/08, Notice 11/21/07—published 1/30/08, effective 3/5/08]

[Filed ARC 7839B (Notice ARC 7675B, IAB 4/8/09), IAB 6/3/09, effective 7/8/09]

◊ Two or more ARCs

[Prior to 7/29/87, Health Department[470] Ch 16]

CHAPTER 16
GARBAGE AND REFUSE

[Prior to 7/29/87, Health Department[470] Ch 16]

Rescinded IAB 1/30/08, effective 3/5/08

CHAPTER 17
SANITATION OF HABITABLE BUILDINGS

[Prior to 7/29/87, Health Department[470] Ch 17]

Rescinded IAB 1/30/08, effective 3/5/08

CHAPTER 18
TOURIST CAMPS, TRAILER CAMPS, CABIN CAMPS, CONSTRUCTION CAMPS AND SIMILAR ESTABLISHMENTS AND AREAS

[Prior to 7/29/87, Health Department[470] Ch 18]

Rescinded IAB 1/30/08, effective 3/5/08

CHAPTER 19
MASS GATHERINGS

[Prior to 7/29/87, Health Department[470]]

Rescinded IAB 1/30/08, effective 3/5/08

CHAPTER 20
COMMUNITY WATER FLUORIDATION GRANT PROGRAM

641—20.1(135) Purpose. The purpose of the Iowa community water fluoridation grant program is to provide grants to fluoride-deficient public water supplies to assist them in implementing water fluoridation.

The dental health bureau, division of family and community health of the Iowa department of public health, will administer federal Preventive Health and Health Services block grant funds to reimburse eligible local government agencies and nonprofit public water systems for costs involved in implementing water fluoridation.

641—20.2(135) Definitions.

"Cost" means costs related to the implementation of community water fluoridation including, but not necessarily limited to, purchase of equipment for introducing fluoride into the water supply, safety equipment, fluoride analytical equipment, estimated fluoride chemicals for the first year's operation, and installation of equipment, including all necessary plumbing and electrical connections.

"Department" means the Iowa department of public health.

"Director" means the director of the Iowa department of public health.

"Eligible applicant" means an incorporated city which operates a fluoride-deficient public water system or a fluoride-deficient public water supply which is federally tax-exempt and incorporated under the Iowa nonprofit corporation Act. Public water systems (operated by incorporated cities or otherwise as above) which currently fluoridate may apply for grant funds for equipment replacement.

"Fluoride-deficient" refers to a public water system that contains less than 0.7 milligrams of fluoride ion per liter of water.

"Plans" means plans, specifications and schedules prepared for submission to the department of natural resources to obtain a construction permit.

641—20.3(135) Applications. Applications shall be submitted on forms provided by the department. Applications shall be sent to the Dental Health Bureau, Division of Family and Community Health, Iowa Department of Public Health, Lucas State Office Building, 321 East 12th Street, Des Moines, Iowa 50319-0075.

Each application shall contain at least the following information:

20.3(1) A description of the water system including sources of water, treatment processes, existing chemical additions, and structures housing existing facilities and equipment.

20.3(2) The number of persons served by the water system.

20.3(3) A copy of the governing body's authorization to implement community water fluoridation.

20.3(4) The most recent mineral analysis of the raw and treated water.

641—20.4(135) Review and rating of applications. The department shall review each application to determine that the applicant is eligible and that the application is complete. The priority of eligible applicants will be established by the department based on the following criteria in order of importance:

20.4(1) Number of people served by the water system. In cases with equal or nearly equal population, priority will be given to the water system serving the higher number of children.

20.4(2) Technical difficulty and cost of implementing fluoridation.

20.4(3) Amount of fluoride deficiency, i.e., the difference between the optimum fluoride concentration as established by the department and the fluoride concentration in the water produced by the water system.

20.4(4) Date of authorization of fluoridation by the water system governing body.

20.4(5) Applicants for funding of equipment replacement shall be lower in priority than applicants initiating community water fluoridation. The department shall evaluate these applicants based on the immediacy of the need for replacement, the population served by the water system, and the cost of the replacement equipment.

641—20.5(135) Project contracts. The department shall execute a contract with each grantee for the amount awarded. The grantee shall not install, construct or purchase any equipment, chemical or service except preliminary consultation services under the terms of 20.6(1)*"b"* before the execution of a contract with the department.

20.5(1) The grantee shall agree to arrange for the installation of a fluoridation system, to procure fluoride chemical and to operate and monitor the equipment within the requirements of the department for a period of five years from the date fluoridation operation is started.

a. The grantee shall analyze water samples for fluoride content as required by the rules of the department of natural resources and shall report the results of the analyses to the department monthly.

b. The grantee shall submit at least one split sample per month to a laboratory certified by the department of natural resources for the analysis of fluoride in drinking water. The results of this analysis shall be reported to the department at least monthly. If a water system operated by a grantee serves fewer than 500 persons, the frequency of sample submission shall be at least one per calendar quarter.

c. The grantee shall notify the department within 5 business days if the operation of the fluoridation equipment is interrupted for more than 14 consecutive days. The notification shall include the reason for the interruption and its anticipated duration.

20.5(2) The department shall agree to reimburse the grantee for the cost of the fluoridation system.

641—20.6(135) Implementation procedures. Applicants whose projects are selected for funding shall be notified by the department in writing.

20.6(1) Plans.

a. The department shall prepare plans for the grantee and submit them to the department of natural resources, or

b. The grantee may have plans prepared by a private consultant. In addition to the cost specified in 20.2(135), the department will reimburse the estimated travel, lodging and meals expense that would have been incurred if the department prepared the plans, and the department of natural resources plan review fee.

c. If the plans are prepared by a private consultant, they shall be submitted to the department for review before submission to the department of natural resources. The department shall comment on the plans within ten business days of their receipt. The department shall determine the eligibility of each proposed service or piece of equipment for reimbursement. If the department determines that modified plans could provide for a safe, operable fluoridation system at a lower cost, the department may require that modified plans be submitted to bidders under 20.6(2)*"a"* as an alternate. The department will reimburse the grantee for the lowest cost bid which meets the requirements of the plans or modified plans.

20.6(2) Within 60 days after a construction permit for the fluoridation system is issued by the department of natural resources, the grantee shall initiate procurement of the required equipment, services and chemicals.

a. The grantee shall procure the major components of the fluoridation system, including any chemical feed device, any scale or tank, any control device, analytical equipment, and any apparatus or piece of equipment costing more than $300 by a competitive bid process.

(1) Each firm which bids on a project shall provide in writing to the grantee the brand name and model number of each major component of the fluoridation system and shall include product literature to demonstrate that the component will meet the project specifications.

(2) Bids shall be confidential until they are examined at an open meeting of the governing body of the grantee.

(3) The department shall review the product literature submitted for each project bid before the grantee awards the project. The department shall judge the compliance of each major component with the project specifications and may require that a modified bid be submitted. If a firm has submitted an apparent low bid, it shall be allowed a reasonable time to submit a modified bid before the project is awarded.

(4) A grantee may, with the written permission of the department, award the project to other than the low bidder. The department will reimburse the grantee for the amount of the low bid.

b. Installation services and the procurement of fluoride chemical may be negotiated with any firm, bearing in mind that Iowa Code section 19B.7 requires the promotion of equal opportunity in all state contracts and services and the prohibition of discriminatory and unfair practices within any program receiving or benefiting from state financial assistance in whole and in part. Negotiated agreements are subject to the review of the department. The department shall judge the reasonableness of the negotiated costs with respect to similar projects and may require additional negotiations or competitive bids before an agreement is implemented.

641—20.7(135) Reimbursement. After the fluoridation equipment is placed in operation, the grantee shall claim reimbursement from the department on forms provided by the department. The grantee shall enter the total expenditures for reimbursable items and services as established by the grant contract. The grantee shall submit copies of invoices for costs incurred in implementing the project.

641—20.8(135) Termination. If a grantee fails to comply with the provisions of the grant contract within a five-year period from the date of the receipt of the signed contract by the grantee, the department may act to recover the amount of the grant award from the grantee.

641—20.9(135) Appeals. Applicants whose applications were not funded have the right to appeal the decision.

An applicant whose proposal has been filed according to rules governing the grant process and who is aggrieved by the awards made pursuant to these rules may request a hearing based upon a showing that the rules governing the grant selection process have not been applied properly. The appeal must be filed with the director within one month of the notification of grant awards.

Appeals must be in writing and must clearly state how the department erred in following the rules of the grant process. The appeal must describe the remedy sought.

These rules are intended to implement Iowa Code section 135.11 and the fluoridation program of the federal Preventive Health and Health Services Block Grant. [Part A, Title XIX, PHS Act]

[Filed 9/18/87, Notice 7/29/87—published 10/7/87, effective 11/11/87]

[Filed 5/10/91, Notice 3/20/91—published 5/29/91, effective 7/3/91]

CHAPTER 21
CENTRAL REGISTRY FOR BRAIN AND SPINAL CORD INJURIES

641—21.1(135) Purpose. This chapter describes the central registry for brain and spinal cord injuries.

641—21.2(135) Definitions. For the purpose of these rules, the following definitions shall apply:

"Acute injury" means an injury for which a person has been continuously hospitalized since recognition of that injury.

"Agency" means Iowa department of public health.

"Brain injury" means any clinically evident brain damage resulting from trauma or anoxia which temporarily or permanently impairs a person's physical or cognitive functions.

"Hospital" means hospital as defined by the department of inspections and appeals in Iowa Code section 135B.1.

"Physical agent" means mechanical energy transmitted from a living or nonliving vector to humans.

"Reportable case" means a person who is admitted or transferred to a hospital with a diagnosis of acute traumatic brain or spinal cord injury or a person who is pronounced dead in the emergency department of a hospital with an acute traumatic brain or spinal cord injury.

"Spinal cord injury" means any acute, traumatic lesion of the neural elements in the spinal canal, resulting in any degree of sensory deficit, motor deficit, or bladder/bowel dysfunction.

641—21.3(135) Reportable injuries. The brain and spinal cord injuries listed below are required to be reported to the Iowa Department of Public Health, Division of Health Protection, Lucas State Office Building, Des Moines, Iowa 50319-0075, as part of a statewide population-based registry.

21.3(1) Reportable cases of brain injuries are those that are identified by the following codes from the International Classification of Diseases, 9th Revision, Clinical Modification:

a. 348.1 (resulting from physical agents)
b. 800.00–800.99—Fracture of vault of skull.
c. 801.00–801.99—Fracture of base of skull.
d. 803.00–803.99—Other and unqualified skull fractures.
e. 804.00–804.99—Multiple fractures involving skull or face with other bones.
f. 850.00–850.99—Concussion.
g. 851.00–851.99—Cerebral laceration and contusion.
h. 852.00–852.59—Subarachnoid, subdural, and extradural hemorrhage, following injury.
i. 853.00–853.19—Other and unspecified intracranial hemorrhage following injury.
j. 854.00–854.19—Intracranial injury of other and unspecified nature.
k. 994.1—Drowning and other nonfatal submersion.
l. 994.7—Asphyxiation and strangulation.

21.3(2) Reportable cases of spinal cord injuries are those that are identified by the following codes from the International Classification of Diseases, 9th Revision, Clinical Modification:

a. 806.00–806.9—Fracture of vertebral column with spinal cord injury.
b. 952.00–952.9—Spinal cord injury without evidence of spinal bone injury.

641—21.4(135) Who reports and under what circumstances. Hospitals treating, transferring, or having pronounced dead any person determined to have sustained a reportable case of traumatic brain or spinal cord injury are required to submit information as identified by the agency.

641—21.5(135) Method and frequency of reporting.

21.5(1) Hospitals shall report, electronically or on a paper form prescribed or approved by the agency, the required information for any reportable case of traumatic brain or spinal cord injury within 45 days after the end of the quarter during which the patient was discharged, transferred to another acute care hospital, or pronounced dead in the emergency department.

21.5(2) Reports that are submitted electronically shall meet the data quality, format, and timeliness standards prescribed by the agency which are described in the manual, available from the agency, for completing the brain and spinal cord injury registry reporting form.

641—21.6(135) Confidentiality.

21.6(1) The agency shall maintain the confidentiality of all submitted registry reports of traumatic brain and spinal cord injuries and shall not release reports, or any information which can be associated with a particular individual, unless the release is in compliance with the provisions of subrule 21.6(2).

21.6(2) A registry report of a traumatic brain or spinal cord injury that is submitted to the agency that can be associated with a particular individual shall be released as follows:

a. To the particular individual upon receipt of a written request signed by the particular individual and suitable identification presented in person to an employee designated by the agency.

b. If the particular individual is a minor, to a parent or attorney of the particular individual upon receipt of a written request signed by a parent or attorney of the individual and of a certified copy of the birth certificate and suitable identification presented to an employee designated by the agency.

c. If the particular individual has a court-appointed guardian or if the particular individual is deceased, to the court-appointed guardian or to the executor or administrator of the particular individual's estate upon receipt of a written request signed by the court-appointed guardian, executor, or administrator, and of a certified copy of the order or decree which appoints the guardian, executor, or administrator, and of suitable identification presented to an employee designated by the agency.

d. To an attorney or other person who is designated by the particular individual upon receipt of a written request signed by the particular individual and suitable identification presented to an employee designated by the agency.

e. To an authorized representative of a study or research project that shall be reviewed by a scientific advisory panel and approved by the director of public health. The director of the agency shall appoint a scientific advisory panel of no less than three scientists or public health staff to review research proposals for which the release of information that identifies an individual who is reported to have a traumatic brain or spinal cord injury is required.

f. The release of information for research that identifies individuals with traumatic brain or spinal cord injuries shall be subject to the terms and conditions set by the agency. Such study or research project keeps the identifying information confidential and privileged. A formal memorandum of agreement signed by an authorized representative of the agency and the director of the research project shall include provisions that the data provided by the agency shall not be copied for retention, resold, or otherwise provided to another person or organization and will be returned to the agency upon completion of the study.

g. The agency may transmit transcripts or copies of reported cases to state or national traumatic brain and spinal cord injury registries when the reports relate to residents of other states or countries. The agreement shall require that the transcripts or records be used for statistical purposes only and that the identity of reported cases shall not be released.

641—21.7(135) Quality assurance. For the purpose of ensuring the completeness and quality of submitted data, each hospital may allow the agency inspection of parts of patient's medical reports as necessary to verify or clarify these data by signing an agreement. The agency's authorized representative may enter the facility, obtain the information, and report it in the appropriate form. Prior to inspecting the records, this agency shall work with the hospital to determine a time and date agreeable to both parties.

These rules are intended to implement Iowa Code section 135.22 as amended by 1994 Iowa Acts, House File 2145.

[Filed 8/28/87, Notice 6/17/87—published 9/23/87, effective 11/1/87][1]

[Filed 1/10/90, Notice 10/4/89—published 2/7/90, effective 3/14/90]

[Filed 9/23/94, Notice 8/3/94—published 10/12/94, effective 11/16/94]

[1] See Human Services[441] Ch 39

CHAPTER 23
PLUMBING AND MECHANICAL SYSTEMS BOARD—LICENSEE PRACTICE

641—23.1(105) Definitions. For purposes of these rules, the following definitions shall apply:

"Board" means the plumbing and mechanical systems board as established pursuant to Iowa Code section 105.3.

"Contractor" means a person or entity that provides plumbing, mechanical, HVAC-refrigeration, or hydronic systems services on a contractual basis and who is paid a predetermined amount under that contract for rendering those services.

"Helper" means a person who performs general manual labor activities and who provides assistance to an apprentice, journeyperson, or master, while under the supervision of a journeyperson or master.

"Journeyperson" means an individual who possesses a valid and current journey level license issued by the board.

"Lapsed license" means a license that expired prior to June 30, 2017, and was not renewed within 60 days following its expiration date, or a license that expired on or after June 30, 2017, and was not renewed by the following August 31.

"Licensee" means a person holding a license issued by the board, including an apprentice, journeyperson, or master license in the plumbing, mechanical, HVAC-refrigeration, sheet metal, or hydronics trades; a combined license; a special, restricted sublicense; or a medical gas certificate.

"Master" means an individual who possesses a valid and current master level license issued by the board.

"Master of record" means an individual possessing an active master license under Iowa Code chapter 105 who shall be responsible for the proper designing, installing, and repairing of plumbing, mechanical, HVAC-refrigeration, sheet metal, or hydronic systems and who is actively in charge of the plumbing, mechanical, HVAC-refrigeration, sheet metal, or hydronic work of a contractor.

This rule is intended to implement Iowa Code sections 105.10, 105.14, 105.16, 105.18, 105.19 and 105.20.

[**ARC 1218C**, IAB 12/11/13, effective 5/1/14]

641—23.2(105) Duties of all licensees, specialty licensees, and certificate holders.

23.2(1) While conducting business or performing work covered under Iowa Code chapter 105, each licensee must keep a copy of the licensee's board-issued, wallet-sized licensing identification card issued under Iowa Code section 105.12(2) on the licensee's person or in an easily retrievable area at the work site.

23.2(2) Each licensee must maintain a residential or business address on record with the board. In the event the licensee's residential or business address changes, the licensee shall so notify the board.

23.2(3) Each licensee shall apply for and obtain all applicable permits prior to performing any work covered under Iowa Code chapter 105 as may be required by any law, ordinance, or regulation of this state, or a political subdivision therein.

23.2(4) A licensee shall present upon request a copy of the licensee's board-issued, wallet-sized license identification card issued under Iowa Code section 105.12(2).

23.2(5) A licensee possessing a lapsed license may not operate as a contractor or work in the plumbing, mechanical, HVAC-refrigeration, sheet metal, or hydronic disciplines or work as a medical gas system installer or work in a specialty license discipline until the license is reinstated and renewed.

23.2(6) Each licensee shall perform all Iowa Code chapter 105-covered work in conformity with the applicable professional code.

23.2(7) A licensee shall not perform any Iowa Code chapter 105-covered work for which the licensee does not possess the requisite license.

23.2(8) A licensee shall conform to the minimum standard of acceptable and prevailing practice and shall exercise the degree of workmanlike care which is ordinarily exercised by the average licensee in the applicable trade acting in the same or similar circumstances.

23.2(9) A licensee who utilizes the services of an unlicensed person as a helper shall be responsible for the work performed by the helper and shall ensure that such work conforms to the minimum standard of acceptable and prevailing practice.

This rule is intended to implement Iowa Code sections 105.10, 105.14, 105.16, 105.18 and 105.19.
[**ARC 1218C**, IAB 12/11/13, effective 5/1/14]

641—23.3(105) Contractor license. A contractor licensed under Iowa Code chapter 105 shall adhere to the following requirements, the violation of which may give rise to disciplinary action:

23.3(1) *Master license requirement.* A contractor shall not engage in the business of designing, installing, or repairing plumbing, mechanical, HVAC-refrigeration, or hydronic systems unless at all times the contractor holds or employs at least one person holding an active master license issued by the board for each discipline in which the contractor conducts business. Without prior board approval, a contractor shall not knowingly utilize a master licensee to meet this requirement if the master licensee is simultaneously associated with another contractor in that discipline.

a. Notwithstanding subrule 23.3(1), in the event a licensed master of record's employment with the contractor is terminated, or the master of record otherwise discontinues the master of record's relationship with the contractor, or the master of record's master license is lapsed, suspended, revoked, expired, or otherwise invalidated, the contractor may continue to provide plumbing, mechanical, HVAC-refrigeration, or hydronic systems services for a period of up to six months without identifying a new master of record.

b. To utilize the six-month grace period set forth in paragraph 23.3(1)*"a,"* a contractor must notify the board of the contractor's loss of the master of record within 30 days from the date the master of record is no longer associated with the contractor, absent exigent circumstances.

23.3(2) *Display of license.* A person holding a contractor license shall keep the current license certificate publicly displayed in the primary place in which the person practices.

23.3(3) *Surety bond.* A person or entity holding a contractor license must maintain during the licensing period a surety bond issued by an entity licensed to do business in Iowa in a minimum amount of $5,000. If a person operates the contractor business as a sole proprietorship, the person must personally obtain and maintain the surety bond. If a person operates the contractor business as an employee or owner of a legal entity, the legal entity must obtain and maintain the surety bond, and the surety bond must cover all plumbing or mechanical work performed by the legal entity. The surety bond required under this subrule must contain a provision that requires the issuing entity to provide the board ten days' written notice before the surety bond can be canceled.

23.3(4) *Public liability insurance.* A person or entity holding a contractor license must maintain during the licensing period public liability insurance issued by an entity licensed to do business in Iowa in a minimum amount of $500,000. If a person operates the contractor business as a sole proprietorship, the person must personally obtain and maintain the public liability insurance. If a person operates the contractor business as an employee or owner of a legal entity, the legal entity must obtain and maintain the public liability insurance, and the public liability insurance must cover all plumbing and mechanical work performed by the legal entity. The public liability insurance required under this subrule must contain a provision that requires the issuing entity to provide the board ten days' written notice before the public liability insurance can be canceled.

23.3(5) *Contractor registration with the labor commissioner.* Through June 30, 2017, a contractor must maintain registration as a contractor with the labor commissioner pursuant to Iowa Code chapter 91C. Effective July 1, 2017, a contractor must maintain such registration by providing the board with the necessary information.

23.3(6) *Permanent place of business.* A contractor must maintain a permanent place of business, the address of which must be provided to the board. If a contractor changes the permanent place of business, the contractor must provide the board the new address within 30 days of the change.

23.3(7) *Licensure requirement.* A contractor shall not knowingly allow an employee to perform work covered under Iowa Code chapter 105 without the applicable license.

23.3(8) *Supervision.* A contractor shall not knowingly allow an apprentice employed by the contractor to perform work covered under Iowa Code chapter 105 without supervision of the apprentice by a master or journeyperson who is also employed by the contractor and who is licensed in the discipline in which the apprentice is performing such work.

This rule is intended to implement Iowa Code sections 105.10, 105.14, 105.16, 105.18, 105.19 and 105.22.

[**ARC 1218C**, IAB 12/11/13, effective 5/1/14]

641—23.4(105) Master license. A master licensed under Iowa Code chapter 105 shall adhere to the following requirements, the violation of which may give rise to disciplinary action:

23.4(1) *Contractor relationship.* A master may only be a master of record for one contractor in any particular discipline at any one time, except that a contractor or a master may seek prior board approval to serve as the master of record for more than one contractor in a particular discipline. An individual who possesses master licenses in multiple disciplines may be a master of record for multiple contractors so long as the individual is only a master of record for one contractor in any particular discipline at one time.

23.4(2) *Contractor.* A master shall not knowingly perform work covered under Iowa Code chapter 105 for an unlicensed contractor.

23.4(3) *Supervision.* A master who superintends the design, installation, or repair of plumbing, mechanical, HVAC-refrigeration, or hydronic systems shall be available to supervise journeypersons or apprentices as needed and may only provide such supervision in the discipline or disciplines in which the master is licensed. A master shall not knowingly supervise unlicensed persons who perform work covered under Iowa Code chapter 105 for which a board-issued license is required.

23.4(4) *Master of record.* A master who serves as a master of record for a contractor and who disassociates from the contractor must notify the board and the contractor of the disassociation, if notice was not previously provided, within 30 days from the date of disassociation, absent exigent circumstances.

This rule is intended to implement Iowa Code section 105.22.

[**ARC 1218C**, IAB 12/11/13, effective 5/1/14]

641—23.5(105) Journeyperson license. A journeyperson licensed under Iowa Code chapter 105 shall adhere to the following requirements, the violation of which may give rise to disciplinary action:

23.5(1) *Working under supervision.* A journeyperson must work under the supervision of a master licensed in the discipline of the work being performed in the design, installation, and repair of plumbing, mechanical, HVAC-refrigeration, or hydronic systems.

23.5(2) *Contractor.* A journeyperson shall not knowingly perform work covered under Iowa Code chapter 105 for an unlicensed contractor.

23.5(3) *Supervision.* A journeyperson who superintends one or more apprentices may only provide such supervision in the discipline(s) in which the journeyperson is licensed and only while performing work for the same contractor licensed under Iowa Code chapter 105. A journeyperson shall not knowingly supervise unlicensed persons who perform work covered under Iowa Code chapter 105 for which a board-issued license is required.

This rule is intended to implement Iowa Code sections 105.10, 105.14, 105.16, 105.18 and 105.19.

[**ARC 1218C**, IAB 12/11/13, effective 5/1/14]

641—23.6(105) Apprentice license. An apprentice licensed under Iowa Code chapter 105 shall adhere to the following requirements, the violation of which may give rise to disciplinary action:

23.6(1) *Working under supervision.* An apprentice may only perform work covered under Iowa Code chapter 105 under the supervision of a master or journeyperson.

23.6(2) *Contractor.* An apprentice shall not knowingly perform work covered under Iowa Code chapter 105 for an unlicensed contractor.

This rule is intended to implement Iowa Code section 105.22.

[**ARC 1218C**, IAB 12/11/13, effective 5/1/14]

641—23.7(105) Specialty licenses and certifications.

23.7(1) *Medical gas certification.*

a. A person who possesses a medical gas certification and who performs medical gas brazing must maintain the person's brazing continuity.

b. A person who possesses a medical gas certification must maintain the person's valid certification issued from the National Inspection Testing Certification (NITC) Corporation or an equivalent authority approved by the board.

23.7(2) *Hearth systems specialty license.*

a. A person who possesses a hearth systems specialty license must maintain the person's valid certification issued from the National Fireplace Institute or equivalent authority approved by the board.

b. A hearth systems specialty license allows a licensee to perform work in the installation of gas burning and solid fuel appliances that offer a decorative view of the flames, from the connector pipe to the shutoff valve located within three feet of the appliance. A hearth systems specialty license further allows for work in the venting systems associated with a hearth appliance, log lighters, gas log sets, fireplace inserts, and freestanding stoves. A hearth systems specialty license does not allow a licensee to install a shutoff valve or perform any other mechanical or HVAC-refrigeration work.

c. A person possessing a hearth systems specialty license shall not perform Iowa Code chapter 105-covered work beyond the limited scope of the person's specialty license, and shall not perform work within the limited scope of the person's specialty license unless the person can conform to the minimum standard of acceptable and prevailing practice of a licensee performing such work.

23.7(3) *Service technician HVAC specialty license.*

a. A licensee who holds a service technician HVAC specialty license by demonstrating the licensee possesses a valid certification from North American Technical Excellence, Inc. or an equivalent authority approved by the board must maintain valid certification from North American Technical Excellence, Inc. or an equivalent authority approved by the board.

b. A service technician HVAC specialty license allows a licensee to perform work from the appliance shutoff valve to the appliance and any part and component of the appliance, including the disconnection and reconnection of the existing appliance to the gas piping and the installation of a shutoff valve no more than three feet from the appliance. A service technician HVAC specialty license does not allow a licensee to perform any other mechanical or HVAC-refrigeration work.

c. A person possessing a service technician HVAC specialty license shall not perform Iowa Code chapter 105-covered work beyond the limited scope of the person's specialty license, and shall not perform work within the limited scope of the person's specialty license unless the person can conform to the minimum standard of acceptable and prevailing practice of a licensee performing such work.

23.7(4) *Disconnect/reconnect plumbing technician specialty license.*

a. A disconnect/reconnect plumbing technician specialty license allows a licensee to perform work from the appliance shutoff valve or the fixture shutoff valve to the appliance or fixture and any part or component of the appliance or fixture, including the disconnection and reconnection of the existing appliance or fixture to the water or sewer piping and the installation of a shutoff valve no more than three feet from the appliance or fixture. A disconnect/reconnect plumbing technician specialty license does not allow a licensee to perform any other plumbing work.

b. A person possessing a disconnect/reconnect plumbing technician specialty license shall not perform Iowa Code chapter 105-covered work beyond the limited scope of the person's specialty license, and shall not perform work within the limited scope of the person's specialty license unless the person can conform to the minimum standard of acceptable and prevailing practice of a licensee performing such work.

23.7(5) *Private school or college routine maintenance specialty license.*

a. A private school or college routine maintenance specialty license allows a licensee to perform routine maintenance within the scope of the licensee's employment with a private school or college. For purposes of this subrule, "routine maintenance" shall mean the maintenance, repair, or replacement of existing fixtures or parts of plumbing, mechanical, HVAC-refrigeration, sheet metal, or hydronic systems in which no changes in original design are made. Fixtures or parts do not include smoke and fire dampers

or water, gas, or steam piping permanent repairs except for traps and strainers. Routine maintenance shall include emergency repairs. Routine maintenance does not include the replacement of furnaces, boilers, cooling appliances, or water heaters more than 100 gallons in size.

b. A person possessing a private school or college routine maintenance specialty license shall not perform Iowa Code chapter 105-covered work beyond the limited scope of the person's specialty license, and shall not perform work within the limited scope of the person's specialty license unless the person can conform to the minimum standard of acceptable and prevailing practice of a licensee performing such work.

This rule is intended to implement Iowa Code section 105.22.

[**ARC 1218C**, IAB 12/11/13, effective 5/1/14]

641—23.8(105) Inactive license.

23.8(1) A person possessing an inactive license under 641—subrule 29.2(6) shall not perform any plumbing, mechanical, HVAC-refrigeration, sheet metal, or hydronic work for which licensure is required so long as the person's license is held in inactive status.

23.8(2) A person possessing an active journeyperson/inactive master license under 641—subrule 29.2(5) shall not perform any plumbing, mechanical, HVAC-refrigeration, or hydronic work for which a master license is required so long as the person's master license is held in inactive status.

This rule is intended to implement Iowa Code sections 105.20 and 105.22.

[**ARC 1218C**, IAB 12/11/13, effective 5/1/14]

[Filed ARC 1218C (Notice ARC 0937C, IAB 8/7/13), IAB 12/11/13, effective 5/1/14]

CHAPTER 24
PRIVATE WELL TESTING, RECONSTRUCTION, AND PLUGGING—GRANTS TO COUNTIES

[Prior to 3/29/06, see 567—Ch 47]

641—24.1(135) Applicability. These rules apply to administration of the grants to counties program by the department in accordance with Iowa Code sections 135.11(29) and 455E.11, subsection 2, paragraph *"b,"* subparagraph (3), subdivision (b), for the purpose of testing private water wells, reconstructing private water wells, and the proper plugging of abandoned private water wells (including cisterns that present a contamination risk to groundwater), within the jurisdiction of each county board of health.

641—24.2(135) Definitions.

"Abandoned private water well" means a private water well which is no longer in use or which is in such a state of disrepair that continued use for the purpose of accessing groundwater is unsafe or impractical.

"Administrative authority" means the county board of health or the county board of health's designee.

"Administrative expenses" means salary, transportation and other associated costs for conducting the private well testing, reconstruction, and plugging program.

"Certified laboratory" means a laboratory certified by the Iowa department of natural resources in accordance with 567 IAC 83.1(3)*"a."*

"Cistern" means an artificial reservoir or tank constructed underground in which rainwater or private well water is stored.

"County board of health" means the board of health of a county as established in accordance with Iowa Code chapter 137.

"Department" means the Iowa department of public health.

"Plugging" means the closure of an abandoned well with plugging materials by procedures which will permanently seal the well from contamination by surface drainage and permanently seal off the well from contamination into an aquifer. "Well plugging" includes the proper application of filling and sealing materials.

"Private water well" means any excavation that is drilled, cored, driven, dug, bored, augered, jetted, washed or otherwise constructed for the purpose of supplying water for human consumption which has fewer than 15 service connections and regularly serves fewer than 25 individuals daily at least 60 days out of the year and agricultural use wells.

"Reconstruction" means modification of the original construction of a well. "Reconstruction" includes, but is not limited to, deepening the well, installing a liner, installing or replacing a screen with one of a different diameter or length, installing a pitless adapter, extending the casing, or hydrofracturing a well. Replacing a screen with one of identical diameter and length or replacing a pitless adapter is considered repair, not reconstruction.

"Total funds available" means the sum of the pesticide/fertilizer taxes allocated within Iowa Code section 455E.11(2)*"b"* (agricultural management account), within a specific state fiscal year, plus any carryover funds remaining from the previous fiscal year, which are returned to the section 455E.11(2)*"b"* (agricultural management account) grants to counties fund.

641—24.3(135) Eligibility. Grant applications must be submitted by a county board of health. Only counties which have adopted standards for private water supply and private sewage disposal facilities (on-site wastewater treatment systems) at least as stringent as and consistent with 567 IAC 49 and 567 IAC 69 and demonstrate an effort to enforce such standards will be eligible to receive grant funds. A county is eligible to submit only one application, either as an individual applicant or as a member of a multicounty application.

641—24.4(135) Goal and objectives.

24.4(1) The goal of the program is to protect groundwater quality by providing assistance in testing all private water supply wells and to use the test information to improve the quality of water in these supplies; to assist in reconstructing eligible private wells; and to assist in plugging all abandoned private water wells (including cisterns that present a contamination risk to groundwater).

24.4(2) During each fiscal year, the amount granted each eligible applicant shall be the total funds available as defined in Iowa Code section 455E.11 divided by the number of eligible counties applying.

24.4(3) Specific program objectives for each county.

a. The specific objectives of the well testing program are:

(1) To provide for regular and periodic testing of private water supply wells using proper sampling, handling and analytical techniques.

(2) To provide for timely responses and corrective action in instances of contamination of private water supply wells.

(3) To establish a reliable and accurate database of information on the location and construction of private water supply wells and water quality of private water supply wells.

b. The specific objectives of the well reconstruction program are:

(1) To identify all private wells eligible for reconstruction cost assistance and to administer private well reconstruction programs.

(2) To ensure the proper reconstruction of all eligible private wells.

(3) To provide cost-sharing grants to owners to assist in the costs of properly reconstructing private wells.

c. The specific objectives of the abandoned private water well plugging program are:

(1) To identify all abandoned private water wells and administer abandoned private water well plugging programs.

(2) To develop abandoned private water well plugging plans in accordance with administrative rules relating to the priority order and the proper plugging of abandoned wells (including cisterns that present a contamination risk to groundwater).

(3) To ensure the proper plugging of all abandoned private water wells (including cisterns that present a contamination risk to groundwater).

(4) To provide cost-sharing grants to owners to assist in the costs of properly plugging abandoned private water wells (including cisterns that present a contamination risk to groundwater).

641—24.5(135) Eligible grant costs. The following are annual eligible costs for which the department will reimburse participating counties:

24.5(1) Up to $500 for private water well-related training expenses, including registration, mileage, and per diem for employees attending department-approved trainings. Training approval is granted to water well-related training sponsored by the department, Iowa Water Well Association, Iowa department of natural resources, and the Iowa Ground Water Association. Other trainings must receive approval of the department prior to submitting a voucher for expenses.

24.5(2) Up to $250 for equipment expenses related to the grants to counties program. Eligible equipment includes, but is not limited to, Global Positioning System (GPS) units, private water well data software, inspection equipment, cameras, and sampling equipment.

24.5(3) Up to $250 for advertising and promotional expenses to educate county residents about the availability of funds for private water well testing, abandoned well plugging, and private water well reconstruction.

24.5(4) $75 will be paid for each private water well test conducted under the program, including $45 for administrative expenses. At a minimum, well sampling shall include analyses for total nitrate (including nitrite) and total coliform bacteria.

24.5(5) $475 will be paid for each abandoned private water well plugging conducted in accordance with 567 IAC 39, including $75 for administrative expenses. Private water well plugging must be conducted by a certified individual as defined in 567 IAC 82 or by the well owner under direct supervision by the county.

24.5(6) $375 will be paid for each cistern plugging but only for those cisterns deemed by the administrative authority to impact groundwater, including $75 for administrative expenses. Cistern plugging must be conducted by a certified individual as defined in 567 IAC 82 or by the well owner under direct supervision by the county.

24.5(7) Up to $600 in reconstruction costs plus 33 percent of actual reconstruction costs for administrative purposes will be paid for each private water well reconstruction. Grant funds may be used to conduct reconstruction intended to preclude contamination due to surface water intrusion by coliform or other infectious bacteria. Examples include repairs of casing, well caps, or pitless adapters, and elimination of well pits.

641—24.6(135) Ineligible grant costs. Grant funds shall not be used for the following:

24.6(1) Conducting environmental health programs other than those related to the private well testing, reconstruction, and plugging program.

24.6(2) Conducting activities outlined in rule 24.5(135) prior to or after the grant period specified.

24.6(3) Analytical services performed by other than a certified laboratory.

24.6(4) Sampling and analytical costs for testing public water supply wells.

24.6(5) Cost of laboratory analytical equipment.

24.6(6) Sampling and analytical costs for testing of wells other than private water supply wells.

24.6(7) Sampling and analytical costs for testing of parameters which have not had either a maximum contaminant level or an Environmental Protection Agency (EPA) health advisory level established.

24.6(8) Reconstructing a well which does not meet separation distances as established in 567 IAC 49. Grant moneys cannot be used for reconstruction of a well which, in the judgment of the administrative authority, will remain a hazard to groundwater quality.

641—24.7(135) Performance requirements. The following minimum standards must be met by all grantees:

24.7(1) *Sample collection.* Private water supply well samples are to be collected using proper sample collection and handling techniques as specified by the department. Samples shall be collected by a qualified staff person pursuant to 24.7(3) who is employed by or under contract with the local board of health.

24.7(2) *Background information.* For each well tested, reconstructed, or plugged, all appropriate information must be verified by a qualified staff person pursuant to 24.7(3) who is employed by or under contract with the local board of health and must be entered into the private well tracking system (PWTS) managed by the Iowa department of natural resources. Information shall include at a minimum:

a. The name and address of the private water well owner or abandoned private water well owner.

b. Private water well or abandoned private water well location to the quarter, quarter, quarter section or latitude and longitude coordinates.

c. Records of dates for reconstructing private water wells or plugging abandoned private water wells (including cisterns).

d. The name and the license number of the water well contractor conducting the private water well reconstruction or the abandoned private water well plugging.

24.7(3) *Qualified staff.* Staff performing services under this agreement shall complete a minimum of 12 hours of continuing education every year as approved by the Iowa Environmental Health Association Environmental Health Registry Program.

24.7(4) *Laboratory analyses.* All analyses must be performed by a laboratory certified by the department of natural resources in accordance with 567 IAC 83.1(3)*"a"* and shall conform with the following:

a. The total coliform bacteria analyses must be performed using an EPA-approved reference method suitable for producing accurate results considering the conditions of the water being tested.

b. Copies of test results must be retained by the grantee and be provided to the owner and user and to the board of health of the county in which the well is located. Copies of the test results will be provided to the department upon request.

24.7(5) *Follow-up.* The grantee will be responsible for follow-up and response to requests from the well owner or well user for assistance relative to well test results, the well testing program, and satisfactory well construction and location.

24.7(6) *Adopted standards.* All counties participating in the program must have adopted standards for private water supplies and private sewage disposal facilities which are at least as stringent as and consistent with the standards adopted by the commission in 567 IAC 49 for nonpublic water wells and 567 IAC 69 for on-site wastewater treatment and disposal systems.

24.7(7) *Quarterly reports.* All counties participating in the program shall submit quarterly reports to claim expenses incurred under this program on a claim voucher provided by the department.

24.7(8) *Workplan.* A detailed workplan including, but not limited to, the following:

a. The names and qualifications of personnel responsible for carrying out the program.

b. The name and address of the certified laboratory(ies) which will be providing analytical services.

c. A description of any proposed environmental health and public information programs related to the private well testing, abandoned well plugging, or private well reconstruction programs.

d. Methods to be used by the applicant for selecting private water wells for testing, abandoned private water wells for plugging, or private water wells for reconstruction.

e. The duties to be performed by any subcontractor for any part of the grant.

f. A description of the follow-up activities to be performed by staff in responding to test results.

g. A record-keeping and reporting policy.

h. Methods of notifying participating well owners.

641—24.8(135) Contents of grant application. The application shall include:

24.8(1) The name, address, and telephone number of the chairperson of the county board of health. For applications representing more than one county, the applicant is the chairperson of the county board of health of the lead county responsible for administering the grant.

24.8(2) The name of each county represented in the grant application.

24.8(3) Upon request from the department, a copy of the adopted standards outlined in subrule 24.7(6) for each county represented in the application.

24.8(4) For multicounty applications, signed Iowa Code chapter 28E agreements between each participating county and the applicant.

24.8(5) If applicable, an identification of any subcontractor who will participate in the private water well testing, abandoned private water well plugging program, or private water well reconstruction program, including mailing address and telephone number.

641—24.9(135) Grant application submission.

24.9(1) *Application form.* Participating counties shall complete an application form provided by the department.

24.9(2) *Submission.* The department will notify each county board of health at least 60 days prior to the grant application due date. Completed applications must be received by the Iowa Department of Public Health, Division of Environmental Health, 321 E. 12th Street, Des Moines, Iowa 50319, by the close of business on the application due date. Applications not received by the application due date will be considered ineligible to receive funding during the appropriate fiscal year.

641—24.10(135) Multicounty grant applications. Two or more counties may join together to apply for a grant. However, for the purposes of multicounty grant programs, the department will accept only one application from the counties involved. The application shall identify the lead county responsible for administering the grant. For multicounty programs, the department will make one grant to the lead county and not to each individual participating county. However, each county represented in the grant application will receive an equal distribution of dollars.

641—24.11(135) Grant period. Grants will be awarded to successful applicants on an annual basis concurrent with the state fiscal year beginning on July 1 and ending on June 30 of the following calendar year.

641—24.12(135) Record keeping and retention. A grantee shall retain all records and supporting documents related to the administration of the grant for a period of three years. Representatives of the state auditor's office and the department or the department's designee shall have access to all files, accounts and documents pertaining to the grant.

641—24.13(135) Grant amendments. Grant agreements which have been approved may be amended, if funds are available, to increase or decrease the program scope or to increase or decrease the program costs.

641—24.14(135) Termination or forfeiture of grant funds.

24.14(1) The grant will be forfeited if the grant was obtained by fraud or misrepresentation regardless of whether grant moneys have already been given to the grantee. Any grant moneys received or spent shall be repaid to the department.

24.14(2) If the department determines that activities agreed upon in the grant agreement have not been satisfactorily completed, forfeiture of a portion of or the entire grant may result.

24.14(3) The continuation or renewal of a grant shall be contingent upon the county's acceptable performance in carrying out its responsibilities described in the workplan and in meeting the grant program goals and objectives. All grants will be issued for not more than a period of one year concurrent with a state fiscal year. Applicants must reapply to continue or renew any grant within the specified grant application acceptance period. The department may deny awarding of a grant extension or withdraw a grant if it is determined that the county has not carried out the grant responsibilities.

24.14(4) An applicant may appeal the denial of a properly submitted grant application. Appeals shall be governed by rule 641 IAC 176.8(135,17A).

These rules are intended to implement Iowa Code sections 455E.11 and 135.11(29).

[Filed 3/9/06, Notice 2/1/06—published 3/29/06, effective 7/1/06]

CHAPTER 25
STATE PLUMBING CODE
[Prior to 7/29/87, see Health Department[470] Ch 25]

641—25.1(105) Adoption. Section 101 and Chapters 2 to 17 of the Uniform Plumbing Code, 2012 Edition, as published by the International Association of Plumbing and Mechanical Officials, 4755 E. Philadelphia Street, Ontario, California 91761-2816, are hereby adopted by reference with amendments as the state plumbing code authorized by Iowa Code section 105.4 as amended by 2013 Iowa Acts, Senate File 427, section 5. Portions of this chapter reproduce excerpts from the 2012 International Plumbing Code, International Code Council, Inc., Washington, D.C. Such excerpts are reproduced with permission, all rights reserved.
[**ARC 8860B**, IAB 6/16/10, effective 7/21/10; **ARC 1089C**, IAB 10/16/13, effective 11/20/13]

641—25.2(105) Applicability. The provisions of this code are applicable to the plumbing in buildings or on premises in Iowa.
[**ARC 8860B**, IAB 6/16/10, effective 7/21/10]

641—25.3(105) Fuel gas piping. Fuel gas piping shall comply with the requirements of Chapter 12 of the Uniform Plumbing Code, 2012 Edition, unless the provisions conflict with 661—Chapter 226, Liquefied Petroleum Gas, Iowa Administrative Code. Where Chapter 12 conflicts with 661—Chapter 226, the provisions of 661—Chapter 226 shall be followed.
[**ARC 8860B**, IAB 6/16/10, effective 7/21/10; **ARC 1089C**, IAB 10/16/13, effective 11/20/13]

641—25.4(105) Amendments to Uniform Plumbing Code. The Uniform Plumbing Code (UPC), as adopted by reference in rule 641—25.1(105), shall be amended as follows:

25.4(1) The following amendment shall apply to UPC Chapter 1:

Subsection 101.11.5 Moved Buildings. Modify the subsection by deleting "except as provided for in Section 103.5.8.2" from the last sentence in the subsection.

25.4(2) The following amendment shall apply to UPC Chapter 3:

Subsection 301.4.1 Permit Application. Delete the subsection.

25.4(3) The following amendments shall apply to UPC Chapter 4:

a. Subsection 421.1 General. Modify the subsection by deleting "Table 1401.1 of this code" and inserting the following in lieu thereof: "Chapter 11 of the 2012 International Building Code."

b. Section 422.1 Fixture Count. Modify the section by deleting the first paragraph and inserting the following in lieu thereof: "Plumbing fixtures shall be provided in each building, for the type of building occupancy, and in the minimum number shown in Table 422.1. The design occupant load and occupancy classification shall be determined in accordance with Section 1004 of the 2012 International Building Code. Required public facilities shall be designated by a legible sign for each sex. Signs shall be readily visible and located near the entrance to each toilet facility."

c. Subsection 422.1.1 Family or Assisted-Use Toilet and Bathing Facilities. Modify the subsection by adding the following sentence to the end of the subsection: "Required family or assisted-use fixtures are permitted to be included in the number of required fixtures for either the male or female occupants in assembly and mercantile occupancies."

d. Table 422.1 Minimum Plumbing Facilities. Delete the table and insert the following table in lieu thereof:

TABLE 422.1 MINIMUM NUMBER OF REQUIRED PLUMBING FIXTURES[a]
(Reprinted, with permission,* from the 2012 International Plumbing Code, IPC Table 403.1)

NO.	CLASSIFICATION	OCCUPANCY	DESCRIPTION	WATER CLOSETS (Urinals, see Sections 411.0 and 412.0)		LAVATORIES		BATHTUBS/ SHOWERS	DRINKING FOUNTAIN[e, f] (See Section 415.0)	OTHER
				MALE	FEMALE	MALE	FEMALE			
1	Assembly	A-1[d]	Theaters and other buildings for the performing arts and motion pictures	1 per 125	1 per 65	1 per 200		—	1 per 500	1 service sink
		A-2[d]	Nightclubs, bars, taverns, dance halls and buildings for similar purposes	1 per 40	1 per 40	1 per 75		—	1 per 500	1 service sink
			Restaurants, banquet halls and food courts	1 per 75	1 per 75	1 per 200		—	1 per 500	1 service sink
		A-3[d]	Auditoriums without permanent seating, art galleries, exhibition halls, museums, lecture halls, libraries, arcades and gymnasiums	1 per 125	1 per 65	1 per 200		—	1 per 500	1 service sink
			Passenger terminals and transportation facilities	1 per 500	1 per 500	1 per 750		—	1 per 1,000	1 service sink
			Places of worship and other religious services	1 per 150	1 per 75	1 per 200		—	1 per 1,000	1 service sink
		A-4	Coliseums, arenas, skating rinks, pools and tennis courts for indoor sporting events and activities	1 per 75 for the first 1,500 and 1 per 120 for the remainder exceeding 1,500	1 per 40 for the first 1,520 and 1 per 60 for the remainder exceeding 1,520	1 per 200	1 per 150	—	1 per 1,000	1 service sink

TABLE 422.1 MINIMUM NUMBER OF REQUIRED PLUMBING FIXTURES[a]
(Reprinted, with permission,* from the 2012 International Plumbing Code, IPC Table 403.1)

NO.	CLASSIFICATION	OCCUPANCY	DESCRIPTION	WATER CLOSETS (Urinals, see Sections 411.0 and 412.0)		LAVATORIES		BATHTUBS/ SHOWERS	DRINKING FOUNTAIN[e, f] (See Section 415.0)	OTHER
				MALE	FEMALE	MALE	FEMALE			
1	Assembly (cont'd)	A-5	Stadiums, amusement parks, bleachers and grandstands for outdoor sporting events and activities	1 per 75 for the first 1,500 and 1 per 120 for the remainder exceeding 1,500	1 per 40 for the first 1,520 and 1 per 60 for the remainder exceeding 1,520	1 per 200	1 per 150	—	1 per 1,000	1 service sink
2	Business	B	Buildings for the transaction of business, professional services, other services involving merchandise, office buildings, banks, light industrial and similar uses	1 per 25 for the first 50 and 1 per 50 for the remainder exceeding 50		1 per 40 for the first 80 and 1 per 80 for the remainder exceeding 80		—	1 per 100	1 service sink[g]
3	Educational	E	Educational facilities	1 per 50		1 per 50		—	1 per 100	1 service sink
4	Factory and Industrial	F-1 and F-2	Structures in which occupants are engaged in work fabricating, assembly or processing of products or materials	1 per 100		1 per 100		(See Section 416)	1 per 400	1 service sink
5	Institutional	I-1	Residential care	1 per 10		1 per 10		1 per 8	1 per 100	1 service sink
		I-2	Hospitals, ambulatory nursing home recipient	1 per room[c]		1 per room[c]		1 per 15	1 per 100	1 service sink per floor
			Employees, other than residential care[b]	1 per 25		1 per 35		—	1 per 100	—
			Visitors, other than residential care	1 per 75		1 per 100		—	1 per 500	—

TABLE 422.1 MINIMUM NUMBER OF REQUIRED PLUMBING FIXTURES[a]
(Reprinted, with permission,* from the 2012 International Plumbing Code, IPC Table 403.1)

NO.	CLASSIFICATION	OCCUPANCY	DESCRIPTION	WATER CLOSETS (Urinals, see Sections 411.0 and 412.0)		LAVATORIES		BATHTUBS/ SHOWERS	DRINKING FOUNTAIN[e, f] (See Section 415.0)	OTHER
				MALE	FEMALE	MALE	FEMALE			
5	Institutional (cont'd)	I-3	Prisons[b]	1 per cell		1 per cell		1 per 15	1 per 100	1 service sink
			Reformatories, detention centers, and correctional centers[b]	1 per 15		1 per 15		1 per 15	1 per 100	1 service sink
			Employees[b]	1 per 25		1 per 35		—	1 per 100	—
		I-4	Adult day care and child care	1 per 15		1 per 15		1	1 per 100	1 service sink
6	Mercantile	M	Retail stores, service stations, shops, salesrooms, markets and shopping centers	1 per 500		1 per 750		—	1 per 1,000	1 service sink[g]
7	Residential	R-1	Hotels, motels, boarding houses (transient)	1 per sleeping unit		1 per sleeping unit		1 per sleeping unit	—	1 service sink
		R-2	Dormitories, fraternities, sororities and boarding houses (not transient)	1 per 10		1 per 10		1 per 8	1 per 100	1 service sink
		R-2	Apartment house	1 per dwelling unit		1 per dwelling unit		1 per dwelling unit	—	1 kitchen sink per dwelling unit; 1 automatic clothes washer connection per 20 dwelling units

TABLE 422.1 MINIMUM NUMBER OF REQUIRED PLUMBING FIXTURES[a]
(Reprinted, with permission,* from the 2012 International Plumbing Code, IPC Table 403.1)

NO.	CLASSIFICATION	OCCUPANCY	DESCRIPTION	WATER CLOSETS (Urinals, see Sections 411.0 and 412.0)		LAVATORIES		BATHTUBS/ SHOWERS	DRINKING FOUNTAIN[e, f] (See Section 415.0)	OTHER
				MALE	FEMALE	MALE	FEMALE			
7	Residential (cont'd)	R-3	One- and two-family dwellings	1 per dwelling unit		1 per dwelling unit		1 per dwelling unit	—	1 kitchen sink per dwelling unit; 1 automatic clothes washer connection per dwelling unit
		R-3	Congregate living facilities with 16 or fewer persons	1 per 10		1 per 10		1 per 8	1 per 100	1 service sink
		R-4	Congregate living facilities with 16 or fewer persons	1 per 10		1 per 10		1 per 8	1 per 100	1 service sink
8	Storage	S-1 and S-2	Structures for the storage of goods, warehouses, storehouses and freight depots. Low and Moderate Hazard.	1 per 100		1 per 100		See Section 416	1 per 1,000	1 service sink

[a] The fixtures shown are based on one fixture being the minimum required for the number of persons indicated or any fraction of the number of persons indicated. The number of occupants shall be determined by the International Building Code.

[b] Toilet facilities for employees shall be separate from facilities for inmates or care recipients.

[c] A single-occupant toilet room with one water closet and one lavatory serving not more than two adjacent patient sleeping units shall be permitted where such room is provided with direct access from each patient sleeping unit and with provisions for privacy.

[d] The occupant load for seasonal outdoor seating and entertainment areas shall be included when determining the minimum number of facilities required.

[e] The minimum number of required drinking fountains shall comply with Table 403.1 and Chapter 11 of the International Building Code.

[f] Drinking fountains are not required for an occupant load of 15 or fewer.

[g] For business and mercantile occupancies with an occupant load of 15 or fewer, service sinks shall not be required.

*Reprinted from the 2012 International Plumbing Code (with modifications) with permission of the International Code Council. All rights reserved.

e. Insert the following text at the end of Chapter 4, reprinted with permission from the 2012 International Plumbing Code:

"422.6 Pay Facilities. Where pay facilities are installed, such facilities shall be in excess of the required minimum facilities. Required facilities shall be free of charge. (Reprinted from IPC 403.3.5)

"422.7 Substitution for Water Closets. In each bathroom or toilet room, urinals shall not be substituted for more than 67 percent of the required water closets in assembly and educational occupancies. Urinals shall not be substituted for more than 50 percent of the required water closets in all other occupancies. (Reprinted from IPC 419.2)"

25.4(4) The following amendment shall apply to UPC Chapter 5:

Sections 503.0 through 503.2 Inspection. Delete the sections.

25.4(5) The following amendment shall apply to UPC Chapter 7:

Section 710.1 Backflow Protection. Modify the section by adding the following sentences to the end of the section: "The requirement for the installation of a backwater valve shall apply only when determined necessary by the authority having jurisdiction based on local conditions. When a valve is required by the authority having jurisdiction, it shall be a manually operated gate valve or fullway ball valve. An automatic backwater valve may also be installed but is not required."

25.4(6) The following amendment shall apply to UPC Chapter 8:

Section 804.7 Domestic Dishwashing Machine. Modify the section by deleting the section and inserting the following language in lieu thereof: "No domestic dishwashing machine shall be directly connected to a drainage system or food waste disposer without the use of an approved dishwasher air gap fitting on the discharge side of the dishwashing machine, or by looping the discharge line of the dishwasher as high as possible near the flood level of the kitchen sink where the waste disposer is connected. Listed air gap fittings shall be installed with the flood level (FL) marking at or above the flood level of the sink or drainboard, whichever is higher."

25.4(7) The following amendment shall apply to UPC Chapter 9:

Section 906.7 Frost or Snow Closure. Modify the section by deleting "two (2) inches (50.8 mm)" in the first sentence and inserting "three (3) inches (76.2 mm)" in lieu thereof.

25.4(8) The following amendment shall apply to UPC Chapter 10:

Table 1002.2 Horizontal Lengths of Trap Arms. Delete the table and insert the following table in lieu thereof:

TABLE 1002.2
Horizontal Lengths of Trap Arms
(Except for Water Closets and Similar Features)[1,2]

Trap Arm Diameter (inches)	Distance Trap to Vent Minimum (inches)	Length Maximum (feet)
1¼	2½	5
1½	3	6
2	4	8
3	6	12
4	8	12
Exceeding 4	2 × Diameter	12

For SI units: 1 inch = 25.4 mm

Notes:

[1]Maintain ¼ inch per foot slope (20.8 mm/m).

[2]The developed length between the trap of a water closet or similar fixture (measured from the top of the closet flange to the inner edge of the vent) and its vent shall not exceed 6 feet (1829 mm).

25.4(9) The following amendments shall apply to UPC Chapter 12:

a. Sections 1203.0 through 1203.4 Inspection. Delete the sections.

b. Sections 1204.0 through 1204.3 Certificate of Inspection. Delete the sections.

c. Sections 1205.0 through 1205.2 Authority to Render Gas Service. Delete the sections.

d. Sections 1207.0 and 1207.1 Temporary Use of Gas. Delete the sections.

25.4(10) The following amendments shall apply to UPC Chapter 13:

a. Sections 1311.0 through 1311.4 Plan Review. Delete the sections.

b. Section 1326.3 Advance Notice. Delete the section.

c. Section 1326.4 Responsibility. Delete the section.

d. Section 1326.5 Testing. Delete the section.

e. Section 1326.6 Retesting. Modify the section by deleting "the Authority Having Jurisdiction finds that" and "or inspection" from the first sentence.

f. Section 1327.4 Report Items. Modify the section by deleting "Authority Having Jurisdiction" and inserting "responsible facility authority" in lieu thereof.

25.4(11) The following amendment shall apply to UPC Chapter 15:

Sections 1506.0 through 1506.4 Required Inspection. Delete the sections.

25.4(12) The following amendments shall apply to UPC Chapter 16:

a. Section 1601.3 Permit. Delete the section.

b. Section 1601.6 Operation and Maintenance Manual. Modify the section by deleting "required to have a permit in accordance with Section 1601.3" from the first sentence.

c. Section 1603.2 Permit. Delete the section.

d. Subsection 1603.11.2.1 Visual System Inspection. Modify the subsection by deleting "by the Authority Having Jurisdiction and other authorities having jurisdiction" from the first sentence.

e. Subsection 1603.11.2.2 Cross-Connection Test. Modify the subsection by deleting "by the applicant in the presence of the Authority Having Jurisdiction and other authorities having jurisdiction" from the first sentence.

f. Subsection 1603.11.2.3 Discovery of Cross-Connection. Modify the subsection by deleting "in the presence of the Authority Having Jurisdiction."

g. Section 1604.2 Plumbing Plan Submission. Delete the section.

h. Section 1604.5 Initial Cross-Connection Test. Modify the section by deleting "by the applicant in the presence of the Authority Having Jurisdiction and other authorities having jurisdiction," and by deleting the final sentence ("The test shall be ruled successful by the Authority Having Jurisdiction before final approval is granted.").

i. Subsection 1604.12.2.1 Visual System Inspection. Modify the subsection by deleting "by the Authority Having Jurisdiction and other authorities having jurisdiction."

j. Subsection 1604.12.2.2 Cross-Connection Test. Modify the subsection by deleting "in the presence of the Authority Having Jurisdiction and other authorities having jurisdiction."

k. Subsection 1604.12.2.3 Discovery of Cross-Connection. Modify the subsection by deleting "in the presence of the Authority Having Jurisdiction."

25.4(13) The following amendments shall apply to UPC Chapter 17:

a. Section 1702.2 Plumbing Plan Submission. Delete the section.

b. Section 1702.5 Initial Cross-Connection Test. Modify the section by deleting the second and third sentences ("Before the building is occupied or the system is activated, the installer shall perform the initial cross-connection test in the presence of the Authority Having Jurisdiction and other authorities having jurisdiction. The test shall be ruled successful by the Authority Having Jurisdiction before final approval is granted.").

c. Subsection 1702.11.2.1 Visual System Inspection. Modify the subsection by deleting "by the Authority Having Jurisdiction and other authorities having jurisdiction."

d. Subsection 1702.11.2.2 Cross-Connection Test. Modify the subsection by deleting "by the applicant in the presence of the Authority Having Jurisdiction and other authorities having jurisdiction."

e. Subsection 1702.11.2.3 Discovery of Cross-Connection. Modify the subsection by deleting "in the presence of the Authority Having Jurisdiction."

[**ARC 8860B**, IAB 6/16/10, effective 7/21/10; **ARC 1089C**, IAB 10/16/13, effective 11/20/13]

641—25.5(105) Backflow prevention with containment. Cities with populations of 15,000 or greater as determined by the 1990 census or any subsequent regular or special census shall have a backflow prevention program with containment. The minimum requirements for a program are given in subrules 25.5(1) through 25.5(5). These requirements are in addition to the applicable requirements of Section 603 of the Uniform Plumbing Code, 2012 Edition.

25.5(1) *Definitions.* The following definitions are added to those in Chapter 2 and Section 603 of the Uniform Plumbing Code, 2012 Edition, or are modified from those definitions for the purposes of rule 641—25.5(105) only.

a. *Administrative authority.* The administrative authority for this rule is the city council and its designees or, with respect to private water utilities, the Iowa utilities board.

b. *Approved backflow prevention assembly for containment.* Approved backflow prevention assembly for containment means a backflow prevention assembly which is approved by the University of Southern California Foundation for Cross-Connection Control and Hydraulic Research. The approval listing shall include the limitations of use based on the degree of hazard. The backflow prevention assembly shall also be listed by the International Association of Plumbing and Mechanical Officials (IAPMO) or by the American Society of Sanitary Engineering (ASSE) as having met the requirements of one of the standards listed below.

Standard	Product Covered
ANSI¤/ASSE* 1013-2009	Reduced Pressure Principle Backflow Preventers
ANSI¤/ASSE* 1015-2009	Double Check Backflow Prevention Assembly
ANSI¤/ASSE* 1047-2009	Reduced Pressure Detector Backflow Preventer
ANSI¤/ASSE* 1048-2009	Double Check Detector Assembly Backflow Preventer
ANSI¤/AWWA† C510-07	Double Check Valve Backflow Prevention Assembly
ANSI¤/AWWA† C511-07	Reduced-Pressure Principle Backflow Prevention Assembly

¤American National Standards Institute, 1819 L Street NW, Washington, DC 20036
*American Society of Sanitary Engineering, 901 Canterbury Road, Suite A, Westlake, OH 44145
†American Water Works Association, 6666 West Quincy Avenue, Denver, CO 80235

c. *Approved backflow prevention assembly for containment in a fire protection system.* Approved backflow prevention assembly for containment in a fire protection system means a backflow prevention assembly to be used in a fire protection system which meets the requirements of Factory Mutual Research Corporation (FM) and Underwriters Laboratory (UL) in addition to the requirements of 25.5(1)*"b."*

d. *Containment.* Containment is a method of backflow prevention which requires a backflow prevention assembly on certain water services. Containment requires that the backflow prevention assembly be installed on the water service as close to the public water supply main as is practical.

e. *Customer.* Customer means the owner, operator or occupant of a building or property which has a water service from a public water system, or the owner or operator of a private water system which has a water service from a public water system.

f. *Degree of hazard.* Degree of hazard means the rating of a cross connection or a water service which indicates if it has the potential to cause contamination (high hazard) or pollution (low hazard).

g. *Water service.* Depending on the context, water service is the physical connection between a public water system and a customer's building, property or private water system, or the act of providing potable water from a public water system to a customer.

25.5(2) *Proposed water service.*

a. No person shall install, or cause to have installed, a water service to a building, property or private water system before the administrative authority has evaluated the proposed water service for degree of hazard.

b. The administrative authority shall require the submission of plans, specifications and other information deemed necessary for a building, property or private water system to which a water service is proposed. The administrative authority shall review the information submitted to determine if cross connections will exist and the degree of hazard.

c. The owner of a building, property or private water system shall install, or cause to have installed, an approved backflow prevention assembly for containment as directed by the administrative authority before water service is initiated.

d. Reconstruction of an existing water service shall be treated as a proposed water service for the purposes of rule 641—25.5(135).

25.5(3) *Existing water services.*

a. Each customer shall survey the activities and processes which receive water from the water service and shall report to the administrative authority if cross connections exist and the degree of hazard.

b. The administrative authority may inspect the plumbing of any building, property and private water system which has a water service to determine if cross connections exist and the degree of hazard.

c. If, based on information provided through 25.5(3)*"a"* and *"b,"* the administrative authority determines that a water service may contaminate the public water supply, the administrative authority shall require that the customer install the appropriate backflow prevention assembly for containment.

d. If a customer refuses to install a backflow prevention assembly for containment when it is required by the administrative authority, the administrative authority may order that water service to the customer be discontinued until an appropriate backflow prevention assembly is installed.

25.5(4) *Backflow prevention assemblies for containment.*

a. Backflow prevention assemblies for containment shall be installed immediately following the water meter or as close to that location as deemed practical by the administrative authority.

b. A water service determined to present a high hazard shall be protected by an air gap or an approved reduced-pressure principle backflow prevention assembly.

c. A water service determined to present a low hazard shall be protected by an approved double check valve assembly or as in 25.5(4)*"b."*

d. A water service to a fire protection system shall be protected from backflow in accordance with the recommendations of American Water Works Association Manual M14. Where backflow prevention is required for a fire protection system, an approved backflow prevention assembly for containment in a fire protection system shall be used.

25.5(5) *Backflow incidents.*

a. The customer shall immediately notify the agency providing water service when the customer becomes aware that backflow has occurred in the building, property or private water system receiving water service.

b. The administrative authority may order that a water service be temporarily shut off when a backflow occurs in a customer's building, property or private water system.

[**ARC 8860B**, IAB 6/16/10, effective 7/21/10; **ARC 1089C**, IAB 10/16/13, effective 11/20/13]

These rules are intended to implement Iowa Code chapter 105 as amended by 2013 Iowa Acts, Senate File 427.

[Filed 12/3/81, Notice 9/2/81—published 12/23/81, effective 1/27/82]
[Filed 2/24/84, Notice 10/26/83—published 3/14/84, effective 4/18/84]
[Filed emergency 7/11/86 after Notice 4/23/86—published 7/30/86, effective 7/11/86]
[Filed emergency 7/10/87—published 7/29/87, effective 7/10/87]
[Filed 1/17/89, Notice 11/16/88—published 2/8/89, effective 3/15/89]
[Filed 7/17/92, Notice 1/22/92—published 8/5/92, effective 9/9/92]
[Filed 5/13/96, Notice 3/13/96—published 6/5/96, effective 7/10/96]
[Filed 9/14/01, Notice 8/8/01—published 10/3/01, effective 11/19/01]
[Filed ARC 8860B (Notice ARC 8703B, IAB 4/21/10), IAB 6/16/10, effective 7/21/10]
[Filed ARC 1089C (Notice ARC 0811C, IAB 6/26/13), IAB 10/16/13, effective 11/20/13]

CHAPTER 26
BACKFLOW PREVENTION ASSEMBLY TESTER REGISTRATION

641—26.1(135K) Applicability. This chapter applies to all persons who test or repair backflow prevention assemblies in Iowa.

641—26.2(135K) Definitions.

"ABPA" means the American Backflow Prevention Association, P.O. Box 3051, Bryan, Texas 77805-3051.

"Administrative authority" means an individual, board, department, or agency employed by a city, county or other political subdivision of the state and authorized by local ordinance to administer and enforce the provisions of the plumbing code.

"Approved continuing education course" means a department-approved course that is designed to supplement or refresh the knowledge of a registered tester and to meet the requirements of subparagraph 26.5(2)*"a"*(2).

"Approved training course" means a department-approved course that is designed to train individuals to test and repair backflow prevention assemblies.

"ASSE" means the American Society of Sanitary Engineering, 901 Canterbury Road, Suite A, Westlake, Ohio 44145.

"AWWA" means the American Water Works Association, 6666 West Quincy Avenue, Denver, Colorado 80235.

"Backflow prevention assembly" for the purposes of this chapter means a device or means to prevent backflow into a potable water system for which a method of testing the device in-line has been published by the Foundation of Cross-Connection Control and Hydraulic Research at the University of Southern California.

NOTE: The following assemblies are included under this definition. This is not intended to be an exclusive list. If new devices and test methods are introduced that meet the definition, they are included under the rules.

Backflow Prevention Assembly	Product Standards
Double Check Valve Assembly	ASSE 1015-2009, AWWA C510-07
Double Check Detector Assembly	ASSE 1048-2009
Pressure Vacuum Breaker	ASSE 1020-2004
Reduced Pressure Principle Backflow Preventer	ASSE 1013-2009, AWWA 511-07
Reduced Pressure Detector Assembly	ASSE 1047-2009
Spill Resistant Pressure Vacuum Breaker	ASSE 1056-2001

"Certified" as used in these rules means certified as a backflow prevention assembly tester under the requirements of ABPA or another third-party certification agency.

"Department" means the Iowa department of public health.

"Proctor" means an individual designated by a third-party certification agency to conduct certification examinations of backflow prevention assembly testers.

"Registered backflow prevention assembly tester" or *"registered tester"* means a person who has successfully completed an approved training course, or who is certified, and who has registered with the department in accordance with 641—26.5(135K).

"Third-party certification agency" means the ABPA or another agency approved by the department to certify the knowledge and skills of backflow prevention assembly testers.

[**ARC 8981B**, IAB 8/11/10, effective 9/15/10]

641—26.3(135K) Registration required. No person shall test or repair a backflow prevention assembly unless the person is a registered backflow prevention assembly tester.

641—26.4(135K) Backflow prevention assembly tester training.

26.4(1) *Tester training.*

a. A person or organization that plans to conduct or sponsor a backflow prevention assembly tester training course in Iowa shall apply to the department for approval of the course at least 15 days before the first time the course is held. If a training course was approved before September 15, 2010, the person or organization responsible for the content of the course shall resubmit the information required by 26.4(1)*"c."* The application shall include:

(1) Sponsoring organization name and Web site URL (if any), contact person, mailing address, E-mail address and telephone number.

(2) Course dates and times, if a course has been scheduled.

(3) Course location, including street address, if a course has been scheduled.

(4) Course outline, including the approximate time allotted to each training segment.

(5) A list of reference materials, texts and audio-visual materials used in the course.

(6) A copy of the written examination for the course and a written description of the elements and standards of proficiency for the practical examination.

(7) The name(s) and qualifications of the instructor(s).

(8) A list of the backflow prevention assemblies available for classwork and the number of test stations available for the students.

(9) The maximum class size.

(10) A $200 nonrefundable fee.

b. The department shall review the application and respond to the applicant within 10 business days after the department receives the application.

c. For a course approved after September 15, 2010, the person or organization responsible for the course content shall submit to the department the information required in paragraph 26.4(1)*"a"* within 30 calendar days of the fifth anniversary of the initial approval by the department and within 30 calendar days of the anniversary date of each fifth year thereafter. For training courses approved prior to September 15, 2010, the person or organization responsible for the content of the course shall submit to the department the information required in paragraph 26.4(1)*"a"* within 30 calendar days of October 1, 2011, and within 30 calendar days of October 1 of each fifth year thereafter.

d. The course sponsor shall notify the department at least 15 days before an approved training course is started. The notification shall include:

(1) Sponsoring organization name and Web site URL (if any), contact person, mailing address, E-mail address, and telephone number.

(2) Course dates and times.

(3) Course location, including street address.

(4) A $50 nonrefundable fee.

e. A training course shall be at least 32 instructional hours and shall cover at least the following subjects:

(1) Backflow definitions, causes and examples.

(2) Description of backflow prevention assemblies, their proper application and installation, and their operational characteristics.

(3) Description and operational characteristics of test equipment.

(4) Techniques for testing backflow prevention assemblies.

(5) Troubleshooting of backflow prevention assemblies.

(6) Record keeping and the responsibilities of regulatory agencies and the registered tester.

The course shall conclude with a written examination of at least 100 questions and a practical examination of testing techniques on all types of testable backflow prevention assemblies. The time for testing shall be in addition to the required instructional hours. To have successfully completed the course, the student must achieve a passing mark of at least 70 percent on the written examination and demonstrate proficiency in testing and troubleshooting procedures.

ABPA or other approved third-party certification agency testing may be substituted for the course test.

f. The lead course instructor shall:

(1) Have successfully completed an approved training course, document the successful completion of a course that meets the requirements of an approved training course, or be certified.

(2) Have at least three years of experience in cross connection control.

g. Backflow prevention assembly testing instruction laboratory.

(1) The testing laboratory for a training course shall be equipped with examples of each of the backflow prevention assemblies from at least three different manufacturers. If fewer than three manufacturers make a type of backflow prevention assembly, at least one example of that type of backflow prevention assembly shall be provided. At least one double check valve assembly and one reduced pressure principle assembly larger than two inches shall be provided.

(2) The testing laboratory shall provide at least one test station per three students.

26.4(2) *Continuing education training.*

a. A person or organization that plans to conduct or sponsor a continuing education course for registered testers in Iowa shall apply to the department for approval of the course at least 15 days before the course is scheduled to begin. The application shall include:

(1) Sponsoring organization name and Web site URL (if any), contact person, mailing address, E-mail address, and telephone number.

(2) Course date and time.

(3) Course location, including street address.

(4) Course outline, including the approximate time allotted to each training segment.

(5) A list of reference materials, texts and audio-visual materials used in the course.

(6) A list of backflow prevention assemblies that will be used for the course (if applicable).

(7) The name(s) and qualifications of the instructor(s).

(8) A $50 nonrefundable fee.

b. The department shall review the application and respond to the applicant within ten business days after the department receives the application.

c. A continuing education course shall be on cross connection control theory and practice; backflow prevention devices and methods; backflow prevention assembly installation, testing, troubleshooting and repair; codes and rules affecting cross connection control; safety issues related to installation and testing of backflow prevention assemblies; or related subjects approved by the department.

26.4(3) *Third-party certification agencies.*

a. An agency that wishes to be a third-party certification agency in Iowa shall submit to the department a request for approval in writing on agency letterhead, signed by an authorized representative of the agency. The request shall include at least the following information:

(1) Agency name and Web site URL (if any), contact person, mailing address, E-mail address, and telephone number.

(2) A description of the written examination and whether it is open- or closed-book and information about the arrangements for administration of the examination.

(3) A copy of the testing procedures that are the basis for the practical examination.

(4) A description of the procedures for the practical examination and the criteria for evaluating the performance on the practical examination.

(5) Proctor qualifications and training.

(6) Procedures and criteria for renewing the certification. The renewal of certification shall be done at least every five years and shall include knowledge and skills testing.

(7) A history of the development and implementation of the program, as applicable.

(8) A list of other jurisdictions where the certification is allowed and regulatory contacts in those jurisdictions.

(9) A nonrefundable fee of $200.

b. A third-party certification agency shall not certify an individual who was trained by the agency. An individual proctor shall not certify individuals who have taken a course at which the proctor was an instructor.

c. A third-party certification agency approved before September 15, 2010, shall submit to the department the information required in paragraph 26.4(3)*"a"* on or within 30 calendar days before October 1, 2011, and on or within 30 calendar days before October 1 of each fifth year thereafter. A third-party certification agency approved after September 15, 2010, shall submit to the department the information in paragraph 26.4(3)*"a"* on or within 30 calendar days before the fifth anniversary of the initial approval by the department and on or within 30 calendar days before the anniversary date of every fifth year thereafter.

[**ARC 8981B**, IAB 8/11/10, effective 9/15/10]

641—26.5(135K) Registration.

26.5(1) *Initial registration.*

a. A person who has successfully completed an approved training course may register with the department within the 12 months after the date of course completion. A person who is certified may register with the department. The applicant must submit:

(1) A completed application form (form provided by the department).

(2) Documentation of successful completion of an approved training course or documentation that the person is certified.

(3) A nonrefundable fee in accordance with Table 1.

The registration shall expire as shown in Table 1.

Table 1

Registration Fees

Registration Month	Even Year		Odd Year	
	Fee	Registration Expiration	Fee	Registration Expiration
January - February	$66	October 31 + one year	$30	October 31
March - April	$60	October 31 + one year	$24	October 31
May - June	$54	October 31 + one year	$18	October 31
July - August	$48	October 31 + one year	$84	October 31 + two years
September - October	$42	October 31 + one year	$78	October 31 + two years
November - December	$36	October 31	$72	October 31 + one year

b. A person who has completed a course of training in another state may be registered in Iowa. The person shall submit:

(1) A completed Iowa application form (form provided by the department).

(2) Documentation that:

1. The person has successfully completed a training course that meets the hour and subject requirements for an approved training course (if the person completed the training course more than 12 months before the date of the application, the person shall document that the person has attended an average of at least 2.5 hours of continuing education training per year since completing the course), or

2. The person is certified, or

3. The person is registered as a backflow prevention assembly tester in a jurisdiction that has similar or greater requirements for training and continuing education than does the state of Iowa.

(3) A nonrefundable fee in accordance with Table 1.

The registration shall expire as shown in Table 1.

26.5(2) *Renewal registration.*

a. Except as provided in subrule 26.5(1), each registered tester shall renew the registration between July 1 and October 1 of each odd-numbered year. The registered tester shall submit:

(1) A completed registration renewal application form (form provided by the department).

(2) Documentation that the registered tester has completed at least five hours of training in approved continuing education courses after October 31 of the previous odd-numbered year or documentation that

the registered tester is certified. Registered testers with an initial registration date of January 1 or later in an odd-numbered year are not required to obtain continuing education prior to renewal in that year.

(3) A nonrefundable fee of $72.

(4) Registration renewal applications received after October 1 shall include a $10 penalty per month or fraction thereof that the application is received after October 1 to a maximum of a $50 penalty.

b. Before a renewal may be issued for a registration that has lapsed for more than 24 months, the person applying for renewal of the registration shall document that one of the following conditions is true:

(1) The person has successfully completed an approved training course within the 12 months before applying for registration renewal, or

(2) The person is certified, or

(3) The person is registered as a backflow prevention assembly tester in a jurisdiction that has similar or greater requirements for training and continuing education than does the state of Iowa.

[**ARC 8981B**, IAB 8/11/10, effective 9/15/10]

641—26.6(135K) Standards of conduct.

26.6(1) A registered tester shall comply with these rules and with the ordinances, rules and policies of the administrative authority in each jurisdiction in which the registered tester tests or repairs a backflow prevention assembly.

26.6(2) A registered tester shall maintain a record for each backflow prevention assembly tested for at least five years after the date on which the assembly was tested. Where required by ordinance, the registered tester shall submit to the administrative authority a completed test report on a form approved by the administrative authority. The record may be reviewed during normal business hours by an authorized representative of the department or by an authorized representative of the administrative authority of the jurisdiction in which the assembly is located. The assembly record shall include at least:

a. The name, address and telephone number of the assembly owner.

b. The location of the facility in which the assembly is located.

c. The location of the assembly within the facility.

d. The type, brand, model, size, and serial number of the assembly.

e. The date and time of the test.

f. Results of the test.

g. Any assembly repairs or maintenance.

641—26.7(135K) Penalty. A person who violates a provision of this chapter shall be guilty of a simple misdemeanor pursuant to the authority of Iowa Code section 135K.5.

641—26.8(135K) Denial, suspension or revocation. This rule pertains to denial, suspension or revocation of registration; denial or revocation of training course approval; and denial or revocation of approval as a third-party certification agency.

26.8(1) The department may deny an application for registration or renewal, may suspend or revoke a registration, or may order a registered tester not to test or repair backflow prevention assemblies when the department finds that the applicant or registered tester has committed any of the following acts:

a. Negligence or incompetence in the testing of a backflow prevention assembly, including failure to report improper application or installation of a backflow prevention assembly to the facility owner and the administrative authority.

b. Knowingly submitting a false report of a test of a backflow prevention assembly to the owner of the facility, the local administrative authority, or the department.

c. Fraud in obtaining registration or renewal including, but not limited to:

(1) Intentionally submitting false information on an application for registration or renewal;

(2) Submitting a false or forged certificate or other record of training or certification.

d. Falsification of the assembly records required by subrule 26.6(2).

e. Failure to comply with these rules and with the ordinances of an administrative authority in whose jurisdiction the registered tester tests a backflow prevention assembly.

f. Failure to pay a required registration, renewal or late fee.

g. Habitual intoxication or addiction to drugs.

h. Violating a statute of this state, another state, or the United States, without regard to its designation as either a felony or misdemeanor, which relates to backflow prevention assembly testing, including but not limited to crimes involving dishonesty, fraud, theft, controlled substances, substance abuse, assault, sexual abuse, sexual misconduct, or homicide. A copy of the record of conviction or plea of guilty is conclusive evidence of the violation.

i. Having the authorization to test backflow prevention assemblies suspended or revoked or having other disciplinary action taken by a licensing or certifying authority of another state, territory or country. A copy of the record or order of suspension, revocation or disciplinary action is conclusive evidence.

j. Knowingly making misleading, deceptive, untrue, or fraudulent representations regarding the testing of backflow prevention assemblies, or engaging in unethical conduct or practice harmful or detrimental to the public. Proof of actual injury need not be established. Acts which may constitute unethical conduct include, but are not be limited to:

(1) Verbally or physically abusing a client or coworker.

(2) Improper sexual contact with or making suggestive, lewd, lascivious, or improper remarks or advances to a client or coworker.

26.8(2) The department may deny or revoke the approval for a training course or a continuing education course when it finds:

a. The lead instructor for a training course is not qualified in accordance with paragraph 26.4(1)*"f."*

b. The training course did not comply with paragraph 26.4(1)*"e."*

c. That the training course testing laboratory did not comply with paragraph 26.4(1)*"g."*

d. The organization or person applying for approval of a training or continuing education course intentionally submitted false information to the department in support of such approval.

e. The organization or person conducting or sponsoring training has falsified training or continuing education records, including issuance of a certificate or other record of training to a person who did not successfully complete a training course or who did not attend continuing education training.

f. The organization or person responsible for a training or continuing education course has permitted physical or verbal abuse or sexual harassment of a student or instructor. Sexual harassment includes sexual advances, sexual solicitation, requests for sexual favors, and other verbal or physical conduct of a sexual nature.

g. The organization or person responsible for training courses and continuing education courses consistently fails to notify the department of such courses in a timely fashion as required by 26.4(1)*"d"* and 26.4(2)*"a"* or fails to pay the required fee.

26.8(3) The department may deny or revoke the approval for a third-party certification agency when it finds:

a. The application for approval contains material misinformation regarding the conduct and standards of the certification program or its acceptance in other jurisdictions.

b. Failure to adhere to the standards and procedures stated in the application for approval in the process of certifying or renewing the certification of testers.

c. Violations of paragraph 26.4(3)*"b."*

26.8(4) Complaints. Complaints regarding a registered tester, an approved training course or a third-party certification agency shall be made in writing and sent to the department at Iowa Department of Public Health, Division of Environmental Health, 321 East 12th Street, Des Moines, Iowa 50319-0075. The complainant shall provide:

a. The name of the registered tester, the person or organization sponsoring an approved course, or the third-party certification agency, as applicable; and

b. The specific details of the action(s) by the registered tester that did not comply with the rules; or

c. The specific way(s) that an approved course did not comply with the rules, including the date(s) and location(s) of the alleged violation(s); or

d. The specific way(s) that a third-party certification agency or its representative failed to comply with the rules, including date(s) and location(s) of the alleged failure to comply.

26.8(5) Appeals.

a. Notice of denial, suspension or revocation of registration; denial or revocation of course approval; or denial or revocation of third-party certification agency approval shall be sent to the affected individual or organization by restricted certified mail, return receipt requested, or by personal service. The affected individual or organization shall have a right to appeal the denial, suspension or revocation.

b. An appeal of a denial, suspension or revocation shall be submitted by certified mail, return receipt requested, within 30 days of receipt of the department's notice. The appeal shall be sent to Iowa Department of Public Health, Division of Environmental Health, Lucas State Office Building, 321 East 12th Street, Des Moines, Iowa 50319-0075. If such a request is made within the 30-day time period, the notice of denial, suspension or revocation shall be deemed to be suspended. Prior to or at the hearing, the department may rescind the notice upon satisfaction that the reason for the denial, suspension or revocation has been or will be removed. After the hearing, or upon default of the applicant or alleged violator, the administrative law judge shall affirm, modify or set aside the denial, suspension or revocation. If no appeal is submitted within 30 days, the denial, suspension or revocation shall become the department's final agency action.

c. Upon receipt of an appeal that meets contested case status, the appeal shall be transmitted to the department of inspections and appeals within five working days of receipt pursuant to the rules adopted by that agency regarding the transmission of contested cases. The information upon which the denial, suspension or revocation is based shall be provided to the department of inspections and appeals.

d. The hearing shall be conducted in accordance with 481—Chapter 10.

e. When the administrative law judge makes a proposed decision and order, it shall be served by restricted certified mail, return receipt requested, or delivered by personal service. The proposed decision and order then becomes the department's final agency action without further proceedings ten days after it is received by the aggrieved party unless an appeal to the director is taken as provided in paragraph 26.8(5)*"f."*

f. Any appeal to the director of the department for review of the proposed decision and order of the administrative law judge shall be filed in writing and mailed to the director by certified mail, return receipt requested, or delivered by personal service within ten days after the receipt of the administrative law judge's proposed decision and order by the aggrieved party. A copy of the appeal shall also be mailed to the administrative law judge. Any request for appeal shall state the reason for appeal.

g. Upon receipt of an appeal request, the administrative law judge shall prepare the record of the hearing for submission to the director. The record shall include the following:

(1) All pleadings, motions and rules.

(2) All evidence received or considered and all other submissions by recording or transcript.

(3) A statement of all matters officially noticed.

(4) All questions and offers of proof, objections, and rulings thereon.

(5) All proposed findings and exceptions.

(6) The proposed findings and order of the administrative law judge.

h. The decision and order of the director becomes the department's final agency action upon receipt by the aggrieved party and shall be delivered by restricted certified mail, return receipt requested.

i. It is not necessary to file an application for a rehearing to exhaust administrative remedies when appealing to the director or the district court as provided in Iowa Code section 17A.19. The aggrieved party to the final agency action of the department who has exhausted all administrative remedies may petition for judicial review of that action pursuant to Iowa Code chapter 17A.

j. Any petition for judicial review of a decision and order shall be filed in the district court within 30 days after the decision and order becomes final. A copy of the notice of appeal shall be sent by

certified mail, return receipt requested, or by personal service to the department at Iowa Department of Public Health, Division of Environmental Health, 321 East 12th Street, Des Moines, Iowa 50319-0075.

k. The party who appeals a final agency action to the district court shall pay the cost of the preparation of a transcript of the contested case hearing for the district court.

[**ARC 8981B**, IAB 8/11/10, effective 9/15/10]

These rules are intended to implement Iowa Code chapter 135K.

[Filed 1/15/93, Notice 11/11/92—published 2/3/93, effective 3/10/93]

[Filed 3/14/03, Notice 2/5/03—published 4/2/03, effective 5/7/03]

[Filed ARC 8981B (Notice ARC 8761B, IAB 5/19/10), IAB 8/11/10, effective 9/15/10]

CHAPTER 27
PLUMBING AND MECHANICAL SYSTEMS BOARD—ADMINISTRATIVE AND REGULATORY AUTHORITY

641—27.1(17A,105) Definitions. For purposes of this chapter, the following definitions apply:

"Board" means the plumbing and mechanical systems board.

"Board office" means the office of the administrative staff.

"Department" means the department of public health.

"Disciplinary proceeding" means any proceeding under the authority of the board pursuant to which licensee discipline may be imposed.

"License" means a license to operate as a contractor or work in the plumbing, mechanical, HVAC-refrigeration, sheet metal, or hydronic disciplines or work as a certified medical gas system installer or work in the specialty license disciplines developed by the board.

"Licensee" means a person or entity licensed to operate as a contractor or work in the plumbing, mechanical, HVAC-refrigeration, sheet metal, or hydronic disciplines or work as a certified medical gas system installer or work in the specialty license disciplines developed by the board.

[**ARC 8528B**, IAB 2/24/10, effective 1/26/10; **ARC 1219C**, IAB 12/11/13, effective 1/15/14]

641—27.2(17A,105) Purpose of board. The purpose of the board is to administer and enforce the provisions of Iowa Code chapters 17A and 105 with regard to the licensing and regulation of plumbers, mechanical professionals, and contractors. The mission of the board is to protect the public health, safety and welfare by licensing qualified individuals who provide services to consumers and by fair and consistent enforcement of the statutes and regulations of the licensure board. Responsibilities include, but are not limited to:

27.2(1) Licensing of qualified applicants to operate as a contractor or work in the plumbing, mechanical, HVAC-refrigeration, sheet metal, or hydronic disciplines or work as a certified medical gas system installer or work in the specialty license disciplines developed by the board by examination, renewal, endorsement, and reciprocity.

27.2(2) Developing and administering a program of continuing education to ensure the continued competency of individuals licensed by the board.

27.2(3) Imposing discipline on licensees as provided by statute or rule.

[**ARC 8528B**, IAB 2/24/10, effective 1/26/10; **ARC 1219C**, IAB 12/11/13, effective 1/15/14]

641—27.3(17A,105) Organization of board and proceedings.

27.3(1) The board shall be composed of 11 members appointed by the governor. The board members identified in subrule 27.3(2), paragraphs *"c"* to *"i,"* are subject to confirmation by the senate.

27.3(2) The members of the board shall include:

a. The director of public health or the director's designee;

b. The commissioner of public safety or the commissioner's designee;

c. One plumbing inspector;

d. One mechanical inspector;

e. One contractor who works primarily in rural areas;

f. One individual licensed as a journeyperson plumber pursuant to the provisions of Iowa Code chapter 105 or, for the initial membership of the board, an individual eligible for such licensure;

g. One individual working as a plumbing contractor and licensed as a master plumber pursuant to the provisions of Iowa Code chapter 105 or, for the initial membership of the board, an individual eligible for such licensure;

h. Two individuals licensed as journeyperson mechanical professionals pursuant to the provisions of Iowa Code chapter 105 or, for the initial membership of the board, two individuals eligible for such licensure; and

i. Two individuals licensed as master mechanical professionals pursuant to the provisions of Iowa Code chapter 105 or, for the initial membership of the board, two individuals eligible for such licensure. One of these individuals shall be a mechanical systems contractor.

27.3(3) The board shall elect a chairperson, vice chairperson, and secretary from its membership at the first meeting after April 30 of each year.

27.3(4) The board shall hold at least four meetings annually.

27.3(5) A majority of the members of the board shall constitute a quorum.

27.3(6) Board meetings shall be governed in accordance with Iowa Code chapter 21, and the board's proceedings shall be conducted in accordance with Robert's Rules of Order, Revised.

27.3(7) The department shall furnish the board with the necessary facilities and employees to perform the duties required by this chapter but shall be reimbursed for all costs incurred from funds appropriated to the board and subsequent fees from licensing activities.

27.3(8) The board has the authority to:

a. Develop and implement a program of continuing education to ensure the continued competency of individuals licensed by the board.

b. Establish fees.

c. Establish committees of the board, the members of which shall be appointed by the board chairperson and shall not constitute a quorum of the board. The board chairperson shall appoint committee chairpersons.

d. Hold a closed session if the board votes to do so in a public roll-call vote with an affirmative vote of at least two-thirds if the total board is present or a unanimous vote if fewer are present. The board will recognize the appropriate statute allowing for a closed session when voting to go into closed session. The board shall keep minutes of all discussion, persons present, and action occurring at a closed session and shall tape-record the proceedings. The records shall be stored securely in the board office and shall not be made available for public inspection.

e. Investigate alleged violations of statutes or rules that relate to operation as a contractor; work in the plumbing, mechanical, HVAC-refrigeration, sheet metal, or hydronic disciplines; work as a certified medical gas system installer; or work in the specialty license disciplines developed by the board upon receipt of a complaint or upon the board's own initiation. The investigation will be based on information or evidence received by the board.

f. Initiate and impose licensee discipline.

g. Monitor licensees that are restricted by a board order.

h. Perform any other functions authorized by a provision of law.

[**ARC 8528B**, IAB 2/24/10, effective 1/26/10; **ARC 1219C**, IAB 12/11/13, effective 1/15/14]

641—27.4(17A,105) Official communications.

27.4(1) All official communications, including submissions and requests, may be addressed to the Plumbing and Mechanical Systems Board, Lucas State Office Building, 321 E. 12th Street, Des Moines, Iowa 50319-0075.

27.4(2) Notice of change of address. Each licensee and licensed entity shall notify the board of a change of the current mailing address within 30 days after the occurrence.

27.4(3) Notice of change of name. Each licensee shall notify the board in writing of a change of name within 30 days after the occurrence.

[**ARC 8528B**, IAB 2/24/10, effective 1/26/10]

641—27.5(17A,105) Office hours. The board office is open for public business from 8 a.m. to 4:30 p.m., Monday to Friday of each week, except holidays.

641—27.6(21) Public meetings. Members of the public may be present during board meetings unless the board votes to hold a closed session. Dates and location of board meetings may be obtained through the Iowa department of public health's Web site (http://www.idph.state.ia.us) or directly from the board office.

27.6(1) At every regularly scheduled board meeting, time will be designated for public comment. During the public comment period, any person may speak for up to two minutes. Any additional time allowances will be at the discretion of the chairperson or acting chairperson.

27.6(2) Persons who have not asked to address the board during the public comment period may raise their hands to be recognized by the chairperson. Acknowledgment and an opportunity to speak will be at the discretion of the chairperson.

27.6(3) The person presiding at a meeting of the board may exclude a person from an open meeting for behavior that obstructs the meeting.

27.6(4) Cameras and recording devices may be used at open meetings, provided the cameras or recording devices do not obstruct the meeting. If the user of a camera or recording device obstructs the meeting by the use of such device, the person presiding at the meeting may request the user to discontinue use of the camera or device.

[**ARC 8528B**, IAB 2/24/10, effective 1/26/10]

These rules are intended to implement Iowa Code chapters 17A and 105.

[Filed 10/17/08, Notice 9/10/08—published 11/5/08, effective 12/10/08]

[Filed Emergency After Notice ARC 8528B (Notice ARC 8360B, IAB 12/2/09), IAB 2/24/10, effective 1/26/10]

[Filed ARC 1219C (Notice ARC 0936C, IAB 8/7/13), IAB 12/11/13, effective 1/15/14]

CHAPTER 28
PLUMBING AND MECHANICAL SYSTEMS BOARD—LICENSURE FEES

641—28.1(105) Fees. All fees are nonrefundable.

28.1(1) Fees for three-year initial licenses are as follows:

a. An apprentice license as defined in 641—subrule 29.2(1) is $50.

b. A journey license as defined in 641—subrule 29.2(2) is $180.

c. A master license as defined in 641—subrule 29.2(3) is $240.

d. A medical gas pipe certificate as defined in 641—29.3(105) is $75.

e. An inactive license as defined in 641—subrules 29.2(5) and 29.2(6) is $50.

f. A contractor license as defined in 641—subrule 29.2(4) is $250.

g. A special restricted license as defined in 641—subrules 29.2(8), 29.2(9), 29.2(10), and 29.2(11) is $50.

h. Fees for all initial licenses issued for a period of less than three years shall be prorated using a one-sixth deduction for each six-month period.

28.1(2) Fees for three-year reciprocal licenses are as follows:

a. An apprentice license as defined in 641—subrule 29.2(1) is $50.

b. A journey license as defined in 641—subrule 29.2(2) is $180.

c. A master license as defined in 641—subrule 29.2(3) is $240.

d. Fees for all reciprocal licenses issued for a period of less than three years shall be prorated using a one-sixth deduction for each six-month period.

28.1(3) Fees for renewal of licenses are as follows:

a. An apprentice license as defined in 641—subrule 29.2(1) is $50.

b. A journey license as defined in 641—subrule 29.2(2) is $180.

c. A master license as defined in 641—subrule 29.2(3) is $240.

d. A medical gas pipe certificate as defined in 641—29.3(105) is $75.

e. An inactive license as defined in 641—subrules 29.2(5) and 29.2(6) is $50.

f. A contractor license as defined in 641—subrule 29.2(4) is $250.

g. A special restricted license as defined in 641—subrules 29.2(8), 29.2(9), 29.2(10), and 29.2(11) is $50.

h. Through June 29, 2017, fees for all licenses renewed for a period of less than three years shall be prorated using a one-sixth deduction for each six-month period.

28.1(4) The examination application fee is $35.

28.1(5) A late fee for failure to renew before expiration is determined as follows:

a. Prior to July 1, 2017, a licensee who allows a license to lapse for 30 days or less may reinstate and renew the license with payment of the appropriate renewal fee and without payment of a late fee. Beginning July 1, 2017, a licensee who does not timely renew but renews a license on or before the following July 31 may reinstate and renew the license upon payment of the appropriate renewal fee and without payment of a late fee.

b. Prior to July 1, 2017, a licensee who allows a license to lapse for more than 30 days but less than 60 days may reinstate and renew the license without examination upon payment of a $60 late fee and the appropriate renewal of license fee. Beginning July 1, 2017, a licensee who does not timely renew but renews a license between the following August 1 and August 31 may reinstate and renew the license without examination upon payment of a $60 late fee and the appropriate renewal of license fee.

c. Prior to July 1, 2017, a licensee who allows a license to lapse for more than 60 days but not more than 365 days may reinstate and renew the license without examination upon payment of a $100 late fee and the appropriate renewal of license fee. Beginning July 1, 2017, a licensee who does not timely renew but renews a license after the following August 31 and on or before the following June 30 may reinstate and renew the license without examination upon payment of a $100 late fee and the appropriate renewal of license fee.

28.1(6) The duplicate or reissued license certificate or wallet card fee is $20.

28.1(7) The fee for written verification of licensee status is $20.

28.1(8) The returned check fee is $25.

28.1(9) The disciplinary hearing fee is a maximum of $75.

28.1(10) The paper application fee is $25 plus the appropriate license fee.

28.1(11) Combined license.

a. For purposes of this subrule, "combined license" shall mean more than one active master, contractor, or journeyperson license in one or multiple disciplines held by the same individual.

b. A license fee for a combined license shall be the sum total of each of the separate license fees as set forth in subrules 28.1(1) through 28.1(3) reduced by 30 percent.

c. In order to be eligible for the combined license fee reduction, all individual licenses must be purchased in a single transaction.

28.1(12) The fee for converting an HVAC-refrigeration or hydronics license to a mechanical license is $50. This fee shall not apply at the time of reissue.

[Editorial change: IAC Supplement 2/25/09; **ARC 8529B**, IAB 2/24/10, effective 1/26/10; **ARC 9603B**, IAB 7/13/11, effective 6/21/11; **ARC 9847B**, IAB 11/16/11, effective 12/21/11; **ARC 0341C**, IAB 10/3/12, effective 11/7/12; **ARC 1299C**, IAB 2/5/14, effective 3/12/14]

641—28.2(105) Annual review of fee schedule. Within 60 days following the end of each fiscal year, the board shall submit a report to the general assembly that includes a balance sheet projection extending no less than three years. If the revenue projection exceeds the expense projections by more than 10 percent, the board shall adjust the fee schedules so that projected revenues are no more than 10 percent higher than projected expenses. Revised fees shall be implemented no later than January 1, 2013, and January 1 of each subsequent year.

[**ARC 9603B**, IAB 7/13/11, effective 6/21/11; **ARC 9847B**, IAB 11/16/11, effective 12/21/11]

These rules are intended to implement Iowa Code section 105.9 as amended by 2013 Iowa Acts, Senate File 427.

[Filed emergency 12/23/08 after Notice 11/5/08—published 1/14/09, effective 1/1/09]
[Editorial change: IAC Supplement 2/25/09]
[Filed Emergency After Notice ARC 8529B (Notice ARC 8361B, IAB 12/2/09), IAB 2/24/10, effective 1/26/10]
[Filed Emergency ARC 9603B, IAB 7/13/11, effective 6/21/11]
[Filed ARC 9847B (Notice ARC 9610B, IAB 7/13/11), IAB 11/16/11, effective 12/21/11]
[Filed ARC 0341C (Notice ARC 0042C, IAB 3/21/12), IAB 10/3/12, effective 11/7/12]
[Filed ARC 1299C (Notice ARC 1128C, IAB 10/16/13), IAB 2/5/14, effective 3/12/14]

CHAPTER 29
PLUMBING AND MECHANICAL SYSTEMS BOARD— APPLICATION, LICENSURE, AND EXAMINATION

641—29.1(105) Definitions. For purposes of these rules, the following definitions shall apply:

"Applicable" means having relevance; appropriate.

"Apprentice" means any person, other than a helper, journeyperson, or master, who, as a principal occupation, is engaged in working as an employee of a plumbing, mechanical, HVAC-refrigeration, sheet metal, or hydronic systems contractor under the supervision of either a master or a journeyperson and is progressing toward completion of an apprenticeship training program registered by the Office of Apprenticeship of the United States Department of Labor while learning and assisting in the design, installation, and repair of plumbing, HVAC, refrigeration, sheet metal, or hydronic systems, as applicable.

"Board" means the plumbing and mechanical systems board.

"Corresponding" means the same discipline.

"Department" means the Iowa department of public health.

"Disconnect/reconnect plumbing technician specialty license" means a sublicense under a plumbing license to perform work from the appliance shutoff valve or fixture shutoff valve to the appliance or fixture and any part or component of the appliance or fixture, including the disconnection and reconnection of the existing appliance or fixture to the water or sewer piping and the installation of a shutoff valve no more than 3 feet from the appliance or fixture.

"Emergency repairs" means the repair of water pipes to prevent imminent damage to property.

"Hearth systems specialty license" means a sublicense under an HVAC-refrigeration or mechanical license to perform work in the installation of gas burning and solid fuel appliances that offer a decorative view of the flames, from the connector pipe to the shutoff valve located within 3 feet of the appliance. This sublicense is further allowed to perform work in the venting systems, log lighters, gas log sets, fireplace inserts, and freestanding stoves.

"HVAC" means heating, ventilation, air conditioning, ducted systems, or any type of refrigeration used for food processing or preservation. "HVAC" includes all natural, propane, liquid propane, or other gas lines associated with any component of an HVAC system.

"Hydronic" means a heating or cooling system that transfers heating or cooling by circulating fluid through a closed system, including boilers, pressure vessels, refrigerated equipment in connection with chilled water systems, all steam piping, hot or chilled water piping together with all control devices and accessories, installed as part of, or in connection with, any heating or cooling system or appliance whose primary purpose is to provide comfort using a liquid, water, or steam as the heating or cooling media. "Hydronic" includes all low-pressure and high-pressure systems and all natural, propane, liquid propane, or other gas lines associated with any component of a hydronic system. For the purposes of this definition, "primary purpose is to provide comfort" means a system or appliance in which at least 51 percent of the capacity generated by its operation, on an annual average, is dedicated to comfort heating or cooling.

"Inactive license" means a license that is available for a plumbing, mechanical, HVAC-refrigeration, sheet metal, or hydronic professional who is not actively engaged in running a business or working in the business in the corresponding discipline at that license level.

"Journeyperson" means any person, other than a master, who, as a principal occupation, is engaged as an employee of, or otherwise working under the direction of, a master in the design, installation, and repair of plumbing, mechanical, HVAC-refrigeration, sheet metal, or hydronic systems, as applicable.

"Licensee" means a person or entity licensed to operate as a contractor or work in the plumbing, mechanical, HVAC-refrigeration, sheet metal, or hydronic disciplines or work as a certified medical gas system installer or work in the specialty license disciplines developed by the board.

"Master" means any person who works in the planning or superintending of the design, installation, or repair of plumbing, mechanical, HVAC, refrigeration, or hydronic systems and is otherwise lawfully

qualified to conduct the business of plumbing, mechanical, HVAC, refrigeration, or hydronic systems, and who is familiar with the laws and rules governing the same.

"Mechanical systems" means HVAC, refrigeration, sheet metal, and hydronic systems.

"Medical gas system installer" means any person who installs or repairs medical gas piping, components, and vacuum systems, including brazers, who has been issued a valid certification from the National Inspection Testing Certification (NITC) Corporation, or an equivalent authority approved by the board.

"Plumbing" means all potable water building supply and distribution pipes, all plumbing fixtures and traps, all drainage and vent pipes, and all building drains and building sewers, storm sewers, and storm drains, including their respective joints and connections, devices, receptors, and appurtenances within the property lines of the premises, and including the connection to sanitary sewer, storm sewer, and domestic water mains. "Plumbing" includes potable water piping, potable water treating or using equipment, medical gas piping systems, fuel gas piping, water heaters and vents, including all natural, propane, liquid propane, or other gas lines associated with any component of a plumbing system.

"Refrigeration" means any system of refrigeration regardless of the level of power, if such refrigeration is intended to be used for the purpose of food processing and product preservation and is also intended to be used for comfort systems. "Refrigeration" includes all natural, propane, liquid propane, or other gas lines associated with any component of refrigeration.

"Routine maintenance" means the maintenance, repair, or replacement of existing fixtures or parts of plumbing, mechanical, HVAC, refrigeration, sheet metal, or hydronic systems in which no changes in original design are made. Fixtures or parts do not include smoke and fire dampers or water, gas or steam piping permanent repairs except for traps or strainers. Routine maintenance shall include emergency repairs. "Routine maintenance" does not include the replacement of furnaces, boilers, cooling appliances, or water heaters more than 100 gallons in size.

"Service technician HVAC specialty license" means a sublicense under an HVAC-refrigeration or mechanical license to perform work from the appliance shutoff valve to the appliance and any part and component of the appliance, including the disconnection and reconnection of the existing appliance to the gas piping and the installation of a shutoff valve no more than 3 feet away from the appliance.

"Sheet metal" means heating, ventilation, air conditioning, pollution control, fume hood systems and related ducted systems or installation of equipment associated with any component of a sheet metal system. "Sheet metal" excludes refrigeration and electrical lines and all natural gas, propane, liquid propane, or other gas lines associated with any component of a sheet metal system.

"Surety bond" means a performance bond written by an entity licensed to do business in this state which guarantees that a contractor will fully perform the contract and which guarantees against breach of that contract.

[**ARC 8530B**, IAB 2/24/10, effective 1/26/10; **ARC 9604B**, IAB 7/13/11, effective 6/21/11; **ARC 9849B**, IAB 11/16/11, effective 12/21/11; **ARC 1220C**, IAB 12/11/13, effective 5/1/14]

641—29.2(105) Available licenses and general requirements. Effective January 1, 2011, all licenses issued by the board will be for a three-year period, except where a shorter or longer period is required or allowed by statute. Subject to the general requirements set forth herein and the minimum qualifications for licensure set forth in rule 641—29.4(105), the following licenses are available:

29.2(1) *Apprentice license.* An applicant for an apprentice license shall:

a. File an application and pay application fees in accordance with 641—29.5(105).

b. Be enrolled in an applicable apprentice program which is registered with the United States Department of Labor Office of Apprenticeship.

c. Certify that the applicant will work under the supervision of a licensed journeyperson or master in the applicable discipline by providing the department with the United States Department of Labor Office of Apprenticeship identification number and sponsor identification number.

29.2(2) *Journeyperson license.*

a. An applicant for a journeyperson license shall:

(1) File an application and pay application fees in accordance with rule 641—29.5(105).

(2) Pass the state journeyperson licensing examination in the applicable discipline. An individual who has passed both the journeyperson HVAC-refrigeration examination and the journeyperson hydronic examination separately shall be qualified to be issued a journeyperson mechanical license without having to pass the journeyperson mechanical examination.

(3) Provide the board with evidence that the applicant has completed at least four years of practical experience as an apprentice. Commencing January 1, 2010, the four years of practical experience required by this paragraph must be an apprenticeship training program registered by the United States Department of Labor Office of Apprenticeship. Documentation must be submitted on a form provided by the board.

b. Notwithstanding the journeyperson licensure requirements set forth in paragraph 29.2(2)*"a,"* an applicant who possesses a master level license and who seeks a journeyperson license in the same discipline shall file an application and pay application fees in accordance with rule 641—29.5(105).

29.2(3) *Master license.* An applicant for a master license shall:

a. File an application and pay application fees in accordance with rule 641—29.5(105).

b. Pass the state master licensing examination for the applicable discipline. An individual who has passed both the master HVAC-refrigeration examination and the master hydronic examination separately shall be qualified to be issued a master mechanical license without having to pass the master mechanical examination.

c. Provide the board with evidence that the applicant:

(1) Has previously been licensed as a master in the applicable discipline; or

(2) Has previously been licensed as a journeyperson in the applicable discipline and has at least two years of journeyperson experience in the applicable discipline.

29.2(4) *Contractor license.* An applicant for a contractor license shall:

a. File an application and pay application fees in accordance with rule 641—29.5(105).

(1) Through June 30, 2017, the application shall include the applicant's state contractor registration number.

(2) Effective July 1, 2017, the application shall include proof of workers' compensation insurance coverage, proof of unemployment insurance compliance and, for out-of-state contractors, a bond as described in Iowa Code chapter 91C.

(3) Effective July 1, 2017, contractor licensure under Iowa Code chapter 105 as amended by 2013 Iowa Acts, Senate File 427, shall constitute registration as a contractor under Iowa Code chapter 91C.

b. Provide the board with evidence that the applicant maintains a permanent place of business.

c. Provide the board with evidence of a public liability insurance policy issued by an entity licensed to do business in this state with a minimum coverage amount of $500,000 and:

(1) If the applicant operates the contractor business as a sole proprietorship, provide the board with evidence that the applicant personally obtained the policy, or

(2) If the applicant operates the contractor business as an employee or owner of a legal entity, provide the board with evidence that the insurance policy is obtained by the entity and that the insurance covers all plumbing or mechanical work performed by the entity.

d. Provide a certificate to the board that the public liability insurance policy required under paragraph 29.2(4)*" c"* and the surety bond required under paragraph 29.2(4)*" d"* shall not be canceled without the entity first giving 10 days' written notice to the board.

e. Provide a certificate to the board that the public liability insurance policy required under paragraph 29.2(4)*"c"* and the surety bond required under paragraph 29.2(4)*"d"* shall not be canceled without the entity first giving 10 days' written notice to the board.

f. Provide the board with evidence that the applicant holds an active master license or employs at least one person who holds an active master license issued under Iowa Code chapter 105 for each discipline in which the applicant performs chapter 105-covered work.

29.2(5) *Active journeyperson license/inactive master license combination.* An applicant for an active journeyperson license and an inactive master license in the same discipline shall:

a. File an application and pay application fees for both an active journeyperson license and an inactive master license in accordance with rule 641—29.5(105).

b. Provide the board with evidence that the applicant meets the requirements for master licensure under subrule 29.2(3).

c. Provide evidence that the applicant is not performing plumbing, mechanical, HVAC-refrigeration, or hydronic work for which a master license is required.

d. Acknowledge awareness that the applicant is unable to perform any plumbing, mechanical, HVAC-refrigeration, or hydronic work for which a master license is required so long as the applicant's master license is held in inactive status.

29.2(6) *Inactive license.* An applicant for an inactive license that does not fall within subrule 29.2(5) shall:

a. File an application and pay application fees in accordance with rule 641—29.5(105).

b. Provide the board with evidence that the applicant meets the requirements for licensure under rule 641—29.2(105) at the applicable licensure level.

c. Provide the board with evidence that the applicant is not actively engaged working in the plumbing, mechanical, HVAC-refrigeration, sheet metal, or hydronic disciplines for which licensure is required.

d. Acknowledge awareness that the applicant is unable to perform any plumbing, mechanical, HVAC-refrigeration, sheet metal, or hydronic work for which licensure is required so long as the applicant's license is held in inactive status.

29.2(7) *Service technician HVAC specialty license.* An applicant for a service technician HVAC specialty license shall:

a. File an application and pay application fees in accordance with rule 641—29.5(105).

b. Provide the board with evidence that:

(1) The applicant possesses a valid certification from North American Technician Excellence, Inc. or an equivalent authority approved by the board, or

(2) The applicant completed a Service Technician Associate degree or equivalent educational or similar training approved by the board.

29.2(8) *Disconnect/reconnect plumbing technician specialty license.* An applicant for a disconnect/reconnect plumbing technician specialty license shall:

a. File an application and pay application fees in accordance with rule 641—29.5(105).

b. Provide the board with evidence that:

(1) The applicant is receiving or has previously received industry training to perform work covered under this specialty license, or

(2) The applicant completed a Service Technician Associate degree or equivalent educational or similar training approved by the board.

29.2(9) *Private school or college routine maintenance specialty license.* An applicant for a private school or college routine maintenance specialty license shall:

a. File an application and pay application fees in accordance with rule 641—29.5(105).

b. Provide the board with evidence that the applicant is currently employed by a private school or college.

c. Provide the board with evidence that the applicant is performing routine maintenance within the scope of employment with the private school or college.

29.2(10) *Hearth systems specialty license.* An applicant for a hearth systems specialty license shall:

a. File an application and pay application fees in accordance with rule 641—29.5(105).

b. Provide the board with evidence that the applicant possesses a valid certification issued by the National Fireplace Institute or equivalent authority approved by the board.

[**ARC 8530B**, IAB 2/24/10, effective 1/26/10; **ARC 9604B**, IAB 7/13/11, effective 6/21/11; **ARC 9849B**, IAB 11/16/11, effective 12/21/11; **ARC 1220C**, IAB 12/11/13, effective 5/1/14]

641—29.3(105) Medical gas piping certification. The following certification is required for a person who performs work as a medical gas system installer. An applicant for a medical gas certificate shall:

29.3(1) File an application and pay applicable fees.

29.3(2) Possess valid certification from the National Inspection Testing Certification (NITC) Corporation, or an equivalent authority approved by the board. Documentation must be submitted on a form provided by the board.
[**ARC 8530B**, IAB 2/24/10, effective 1/26/10]

641—29.4(105) Minimum qualifications for licensure. The following minimum requirements shall apply to all licenses issued after July 1, 2008.

29.4(1) An applicant for any type of license must be at least 18 years old.

29.4(2) Effective January 1, 2010, all apprentice applicants must have completed a high school education or attained GED equivalent.
[**ARC 8530B**, IAB 2/24/10, effective 1/26/10; **ARC 1220C**, IAB 12/11/13, effective 5/1/14; see Delay note at end of chapter]

641—29.5(105) General requirements for application for licensure. The following criteria shall apply to application for licensure.

29.5(1) On-line or paper application.

a. An applicant shall complete a board-approved application either on-line or on a paper application according to instructions contained in the application.

b. Applications can be completed on-line or on a paper application. Paper applications are available to download at http://www.idph.state.ia.us/eh/plumbing.asp or from the board office by writing to: Plumbing and Mechanical Systems Board, Iowa Department of Public Health, 312 E. 12th Street, 5th Floor, Des Moines, Iowa 50319-0075, or by calling 1-866-280-1521.

29.5(2) Fees. In order to be processed, each application must be accompanied by the appropriate fees as determined by the board. All fees are nonrefundable.

a. On-line application fees shall be paid by credit card only.

b. A paper application shall be accompanied by the appropriate fees payable by check or money order to the Iowa Plumbing and Mechanical Systems Board.

29.5(3) If the applicant is notified that the application is incomplete, the applicant must contact the board office within 90 days. The board may be contacted at: Plumbing and Mechanical Systems Board, Iowa Department of Public Health, 312 E. 12th Street, 5th Floor, Des Moines, Iowa 50319, or by calling 1-866-280-1521.

29.5(4) No application will be considered by the board without the appropriate verifiable documentation. An applicant must submit the following verifiable documentation:

a. A passing score for a discipline-appropriate examination provided by the testing vendor under contract with the board, when testing is required for a license.

b. Verification that the applicant has met the minimum requirements as defined in 641—29.4(105) and the established employment experience criteria for each type of license.

c. Documentation of criminal convictions related to the practice of the profession, which shall include a full explanation from the applicant. No application shall be considered complete unless and until the licensee responds to board requests for additional information regarding applicant criminal convictions.

29.5(5) Complete applications shall be filed with the plumbing and mechanical systems board. Incomplete applications shall be considered invalid and after 90 days shall be destroyed.
[**ARC 8530B**, IAB 2/24/10, effective 1/26/10; **ARC 1220C**, IAB 12/11/13, effective 5/1/14]

641—29.6(105) Examination.

29.6(1) An applicant for licensure as a plumbing or mechanical system professional that requires a state licensing examination must successfully pass the licensing examination for the discipline.

a. The examination will be administered by the board-approved vendor.

b. The board shall approve the specific examination to be used for each license type.

c. Rescinded IAB 2/24/10, effective 1/26/10.

29.6(2) Examination requirements.

a. The examination will be written and proctored by a testing agency selected by the board.

b. The examination will be offered periodically during the year. The time and location will rotate between multiple sites in the state of Iowa, as determined by the department, with approval of the board.

c. The examination will not be subject to review by applicants. The testing vendor shall, upon request from an applicant, provide information about the sections that the applicant failed, but shall not provide an applicant access to actual examination questions or answers. Any fees associated with the review process will be assessed by and payable to the testing vendor. The applicant is responsible for paying all associated examination fees.

d. A score of 75 percent or better will be considered passing.

29.6(3) Examination application requirements.

a. An applicant shall complete and submit a board-approved examination application either on-line or on a paper application a minimum of 15 business days prior to taking an examination. An applicant shall complete the application form according to instructions contained in the application.

b. Examination applications can be completed on-line or on a paper application. Paper applications are available to download at http://www.idph.state.ia.us/eh/plumbing.asp or from the board office by writing to: Plumbing and Mechanical Systems Board, Iowa Department of Public Health, 312 E. 12th Street, 5th Floor, Des Moines, Iowa 50319-0075, or by calling 1-866-280-1521.

c. Fees. In order to be processed, each application must be accompanied by the appropriate fees as determined by the board. All fees are nonrefundable.

(1) On-line examination application fees shall be paid by credit card only.

(2) A paper examination application shall be accompanied by the appropriate fees payable by check or money order to the Iowa Plumbing and Mechanical Systems Board.

d. No application will be considered by the board without the appropriate verifiable documentation.

e. The applicant will be notified and issued an examination entrance letter upon approval of the examination application.

f. If the applicant is notified that the application is incomplete, the applicant must contact the board office within 90 days. The board may be contacted at: Plumbing and Mechanical Systems Board, Iowa Department of Public Health, 312 E. 12th Street, 5th Floor, Des Moines, Iowa 50319, or by calling 1-866-280-1521.

g. Incomplete applications shall be considered invalid and after 90 days shall be destroyed.

h. Examination fees shall be payable directly to the board-approved testing vendor.

(1) All transactions shall be the responsibility of the applicant and testing vendor.

(2) The board shall not be held responsible for refunds from the testing vendor.

i. An applicant shall present current photo identification in order to sit for the examination.

j. An applicant for licensure by examination who does not pass the examination within one year from the original application date will be required to submit a new application.

k. A master examination applicant shall not receive permission to sit for a master examination unless the applicant establishes that the applicant:

(1) Has previously been licensed as a master in the applicable discipline; or

(2) Has previously been licensed as a journeyperson in the applicable discipline and has at least two years of journeyperson experience in the applicable discipline.

l. A journeyperson examination applicant may apply to sit for the examination up to 6 months prior to completion of the 48 months of required apprentice credit, which shall include the granting of advanced standing or credit for previously acquired experience, training, or skills.

29.6(4) Expiration of passing examination score. An applicant who successfully passes an examination must apply for licensure in the applicable discipline at the applicable discipline level within two years of notification that the applicant successfully passed the examination. A passing examination score shall expire if the applicant fails to apply for licensure within the two-year period as set forth herein, and the applicant shall be required to successfully retake said examination to become licensed in the applicable discipline at the applicable discipline level.

[**ARC 8530B**, IAB 2/24/10, effective 1/26/10; **ARC 9604B**, IAB 7/13/11, effective 6/21/11; **ARC 9849B**, IAB 11/16/11, effective 12/21/11; **ARC 1220C**, IAB 12/11/13, effective 5/1/14]

641—29.7(105) License renewal.

29.7(1) The period of licensure to operate as a contractor or work as a master, journeyperson or apprentice in the plumbing, mechanical, HVAC-refrigeration, sheet metal, or hydronic disciplines or work as a certified medical gas system installer or work in the specialty license disciplines developed by the board shall be for a period of three years, except as allowed or required in circumstances described in this subrule.

a. All licenses issued or renewed on or after July 1, 2014, shall expire on June 30 every three years, beginning with June 30, 2017.

b. All licenses that currently possess an expiration date prior to June 30, 2014, shall be granted a one-time extension of the expiration date to June 30, 2014, at no additional charge and with no additional continuing education requirements. The licensees holding the licenses described in this rule shall pay a full renewal fee upon renewal and shall be issued a license with an expiration date of June 30, 2017.

c. Licensees with a renewal date that falls from July 1, 2014, through June 29, 2017, shall have the license renewal fee prorated using a one-sixth deduction for each six-month period following July 1, 2014. Applicable late renewal fees shall apply during this period. Licenses renewed through June 29, 2017, shall be issued with an expiration date of June 30, 2017.

d. Fees for new licenses issued after the July 1 beginning of each three-year renewal cycle shall be prorated using a one-sixth deduction for each six-month period of the renewal cycle.

e. A licensee whose license expires between June 30, 2014, and July 1, 2017, may voluntarily renew the license early so the license may have an expiration date of June 30, 2017. This voluntary early renewal may happen at any time on or after July 1, 2014. Notwithstanding any shortened compliance period, licensees who renew their licenses between June 30, 2014, and July 1, 2017, shall meet all of the continuing education requirements that would otherwise be required at both the July 1, 2017, renewal and the prior renewal.

29.7(2) Renewal notification.

a. Through December 31, 2016, the board shall send a renewal notice by regular mail to each licensee at the address on record at least 60 days prior to the expiration of the license. After December 31, 2016, the board shall cease this practice.

b. The licensee is responsible for renewing the license prior to its expiration.

c. Failure of the licensee to receive the notice does not relieve the licensee of the responsibility for renewing the license.

29.7(3) Specific renewal requirements.

a. A licensee seeking renewal shall:

(1) Meet the continuing education requirements as set forth in rule 641—30.2(105). A licensee whose license was reactivated during the current renewal compliance period may use continuing education credit earned during the compliance period for the first renewal following reactivation; and

(2) Submit the completed renewal application and renewal fee before the license expiration date.

b. Failure to renew a license within two months after the expiration of the license shall not invalidate the license, but a reasonable penalty may be assessed as set forth in 641—subrule 28.1(5), in addition to the license renewal fee, to allow reinstatement of the license.

(1) Prior to July 1, 2017, a licensee who allows a license to lapse for 30 days or less may reinstate and renew the license without examination upon payment of the appropriate renewal of license fee as defined in 641—subrule 28.1(3). Beginning July 1, 2017, a licensee who does not timely renew but renews the license on or before the following July 31 may reinstate and renew the license without examination upon payment of the appropriate renewal of license fee as defined in 641—subrule 28.1(3).

(2) Prior to July 1, 2017, a licensee who allows a license to lapse for more than 30 days but less than 60 days may reinstate and renew the license without examination upon payment of a $60 late fee and the appropriate renewal of license fee as defined in 641—subrule 28.1(3). Beginning July 1, 2017, a licensee who does not timely renew but renews a license between the following August 1 and August 31 may reinstate and renew the license without examination upon payment of a $60 late fee and the appropriate renewal of license fee as defined in 641—subrule 28.1(3).

c. Prior to July 1, 2017, a licensee who allows a license to lapse for more than 60 days but not more than 365 days may reinstate and renew the license without examination upon payment of a $100 late fee and the appropriate renewal of license fee as defined in 641—subrule 28.1(3). Beginning July 1, 2017, a licensee who does not timely renew but renews a license after the following August 31 and on or before the following June 30 may reinstate and renew the license without examination upon payment of a $100 late fee and the appropriate renewal of license fee as defined in 641—subrule 28.1(3).

d. A licensee who allows a license to lapse for more than one year may reinstate and renew the license by either of the following means:

(1) Retaking and successfully passing the applicable licensing examination and paying the appropriate renewal fee as defined in 641—subrule 28.1(3), or

(2) Retaking and successfully completing all continuing education requirements as set forth in rule 641—30.2(105) and paying the appropriate renewal fee as defined in 641—subrule 28.1(3).

e. A licensee who reinstates and renews a lapsed license under paragraph 29.7(3)*"d"* shall not be entitled to a prorated, reduced renewal fee.

[**ARC 8530B**, IAB 2/24/10, effective 1/26/10; **ARC 9604B**, IAB 7/13/11, effective 6/21/11; **ARC 9849B**, IAB 11/16/11, effective 12/21/11; **ARC 0340C**, IAB 10/3/12, effective 11/7/12; **ARC 1220C**, IAB 12/11/13, effective 5/1/14]

641—29.8(105) License reissue. Each reissued license shall be for the same level of license held by the licensee at the time of renewal. Beginning July 1, 2014, upon renewal, licenses shall be reissued as follows:

29.8(1) An individual who holds a refrigeration license shall be reissued an HVAC-refrigeration license; an individual who holds an HVAC license shall be reissued an HVAC-refrigeration license.

29.8(2) An individual who holds an HVAC license and a hydronic license shall be reissued a mechanical license.

29.8(3) An individual who holds a refrigeration license and a hydronic license shall be reissued a mechanical license.

29.8(4) An individual who holds a refrigeration license or an HVAC license and has passed the board-designated hydronics test prior to June 30, 2014, shall be reissued a mechanical license.

29.8(5) An individual who holds only a hydronics license shall be reissued a hydronics license.

[**ARC 8783B**, IAB 6/2/10, effective 5/10/10; **ARC 1220C**, IAB 12/11/13, effective 5/1/14]

641—29.9(105) Waiver from examination for military service. The written examination requirements and prior experience requirements set forth in Iowa Code sections 105.18(2)*"b"*(1) and 105.18(2)*"c"* shall be waived for a journeyperson license or master license if the applicant meets all of the following requirements:

29.9(1) Is an active or retired member of the United States military.

29.9(2) Provides documentation that the applicant was deployed on active duty during any portion of the time period of July 1, 2008, through December 31, 2009.

29.9(3) Provides documentation that shows the applicant has previously passed an examination which the board deems substantially similar to the examination for a journeyperson license or a master license, as applicable, issued by the board, or provides documentation that shows the applicant has previously been licensed by a state or local government jurisdiction in the same trade and trade level.

[**ARC 9604B**, IAB 7/13/11, effective 6/21/11; **ARC 9849B**, IAB 11/16/11, effective 12/21/11]

These rules are intended to implement Iowa Code sections 105.2, 105.5, 105.9, 105.18, 105.19, 105.20, 105.22 and 272C.3 and 2013 Iowa Acts, Senate File 427.

[Filed emergency 12/23/08 after Notice 11/5/08—published 1/14/09, effective 1/1/09]

[Filed Emergency After Notice ARC 8530B (Notice ARC 8362B, IAB 12/2/09), IAB 2/24/10, effective 1/26/10]

[Filed Emergency ARC 8783B, IAB 6/2/10, effective 5/10/10]

[Filed Emergency ARC 9604B, IAB 7/13/11, effective 6/21/11]

[Filed ARC 9849B (Notice ARC 9612B, IAB 7/13/11), IAB 11/16/11, effective 12/21/11]

[Filed ARC 0340C (Notice ARC 0043C, IAB 3/21/12), IAB 10/3/12, effective 11/7/12]

[Filed ARC 1220C (Notice ARC 0934C, IAB 8/7/13), IAB 12/11/13, effective 5/1/14][1]

[1] May 1, 2014, effective date of ARC 1220C, Item 12 [rescission of 29.4(3)], delayed until the adjournment of the 2014 General Assembly by the Administrative Rules Review Committee at its meeting held January 10, 2014.

CHAPTER 30
CONTINUING EDUCATION FOR PLUMBING AND MECHANICAL SYSTEMS PROFESSIONALS

641—30.1(105) Definitions. For the purpose of these rules, the following definitions shall apply:

"Approved program/activity" means a continuing education program/activity meeting the standard set forth in these rules.

"Board" means the plumbing and mechanical systems board as established pursuant to Iowa Code section 105.3.

"Compliance review" means the selection by the board of licensees for verification of satisfactory completion of continuing education requirements during a specified continuing education compliance period.

"Continuing education" means planned, organized learning acts acquired during licensure designed to maintain, improve, or expand a licensee's knowledge and skills relevant to the enhancement of practice, education, or theory development to improve the safety and welfare of the public.

"Continuing education compliance period" means the period between renewals during which a licensee must obtain the requisite amount of continuing education in order to renew the licensee's license.

"Hour of continuing education" means at least 50 minutes spent in one sitting by a licensee in actual attendance at and in completion of an approved continuing education activity.

"Iowa mechanical code" means the most current version of the International Mechanical Code, as adopted and amended by the board.

"Iowa plumbing code" means the most current version of the Uniform Plumbing Code, as adopted and amended by the board.

"License" means a license to work in a specific discipline covered under Iowa Code chapter 105.

"Licensee" means any person licensed to work in a specific discipline covered under Iowa Code chapter 105.

[**ARC 8270B**, IAB 11/4/09, effective 10/16/09; **ARC 8475B**, IAB 1/13/10, effective 2/17/10; **ARC 1221C**, IAB 12/11/13, effective 1/15/14]

641—30.2(105) Continuing education requirements.

30.2(1) The continuing education compliance period shall begin on the license issue date and end on the license expiration date.

30.2(2) The following continuing education requirements shall apply only to each licensee's first renewal on or after July 1, 2014. For all renewals thereafter, the requirements of subrule 30.2(3) shall apply:

a. All inactive and active master and journey licensees shall be required to complete a minimum of 8 hours of board-approved continuing education, of which 4 hours shall be in the practice discipline in which the licensee holds a license. A minimum of 2 hours of the 8 hours shall be in the content area of the applicable Iowa plumbing or mechanical codes, and 2 hours of the 8 hours shall be in the content area of the Iowa Occupational Safety and Health Act.

b. All inactive and active master and journey licensees holding licenses in multiple mechanical code disciplines (i.e., HVAC, hydronics, or refrigeration) with the same license expiration date shall obtain a minimum of 14 hours of board-approved continuing education, of which 8 hours shall be in any of the practice disciplines in which the licensee holds a license. A minimum of 2 hours of the 14 hours shall be in the content area of the applicable Iowa mechanical code, and 4 hours of the 14 hours shall be in the content area of the Iowa Occupational Safety and Health Act. All inactive and active master and journey licensees holding a plumbing discipline license and at least one mechanical code discipline license (i.e., HVAC, hydronics, or refrigeration) with the same expiration date shall obtain a minimum of 16 hours of board-approved continuing education, of which 8 hours shall be in any of the practice disciplines in which the licensee holds a license. A minimum of 2 hours of the 16 hours shall be in the content area of the Iowa plumbing code, 2 hours of the 16 hours shall be in the content area of the Iowa mechanical code, and 4 hours of the 16 hours shall be in the content area of the Iowa Occupational Safety and Health Act.

c. An individual possessing one special, restricted license issued pursuant to Iowa Code section 105.18(3) shall be required to complete the same number and type of continuing education hours as set forth in paragraph 30.2(2)*"a."* For purposes of paragraph 30.2(2)*"c,"* the prescribed practice discipline for each special, restricted license shall be the discipline under which the special license is a sublicense.

d. An individual possessing two or more special, restricted licenses issued pursuant to Iowa Code section 105.18(3) shall be required to complete the same number and type of continuing education hours as set forth in paragraph 30.2(2)*"b."* For purposes of paragraph 30.2(2)*"d,"* the prescribed practice discipline for each special, restricted license shall be the discipline under which the special license is a sublicense.

30.2(3) During each continuing education compliance period, each active or inactive master and journeyperson licensee must obtain the following amounts of continuing education:

a. *Safety education.* Each licensee holding a single license shall complete two hours, and each licensee holding multiple licenses shall complete four hours, of continuing education in the content area of the Iowa Occupational Safety and Health Act.

b. *Code education.*

(1) Each licensee holding one or more licenses or sublicenses in a mechanical discipline shall complete two hours of continuing education in the content area of the Iowa mechanical code.

(2) Each licensee holding a plumbing license or sublicense shall complete two hours of continuing education in the content area of the Iowa plumbing code.

c. *Discipline education.*

(1) A licensee holding a single plumbing license or sublicense, or a single license or sublicense in a mechanical discipline, shall complete four hours of continuing education in the discipline in which the licensee holds a license.

(2) A licensee holding multiple licenses or sublicenses shall complete eight hours of continuing education in the relevant disciplines.

d. *Private school or college maintenance specialty license.* For the purposes of this subrule, a private school or college routine maintenance specialty license shall be considered to be a sublicense of whatever discipline(s) in which the licensee actually practices.

30.2(4) Up to one-half of board-approved continuing education required by subrule 30.2(2) each continuing education compliance period may be obtained through completion of computer-based continuing education programs/activities approved by the board.

30.2(5) It is the responsibility of each licensee to finance the cost of continuing education.

30.2(6) A licensee who is a presenter of a board-approved continuing education program may receive credit once per continuing education compliance period for the presentation of the program. The licensee may receive the same number of hours granted the attendees.

[**ARC 8270B**, IAB 11/4/09, effective 10/16/09; **ARC 8475B**, IAB 1/13/10, effective 2/17/10; **ARC 9605B**, IAB 7/13/11, effective 6/21/11; **ARC 9850B**, IAB 11/16/11, effective 12/21/11; **ARC 1221C**, IAB 12/11/13, effective 1/15/14]

641—30.3(105) Continuing education programs/activities.

30.3(1) *Standards for continuing education programs/activities.* A program/activity is appropriate for continuing education credit if the program/activity meets all of the following criteria:

a. Is board-approved;

b. Constitutes an organized program of learning that contributes directly to the professional competency of the licensee;

c. Pertains to subject matters that integrally relate to the practice of the discipline;

d. Is conducted by individuals who have obtained board approval as required under subrule 30.4(1). This criterion shall not be required for computer-based continuing education programs/activities conducted pursuant to subrule 30.2(3);

e. Fulfills stated program goals, objectives, or both; and

f. Covers product knowledge, methods, and systems of one or more of the following:

(1) The theory and technique for a specific discipline;

(2) The current Iowa plumbing code, Iowa mechanical code, or both;

(3) The standards comprising the current Iowa Occupational Safety and Health Act.

30.3(2) *Board approval.* Board approval for specific programs/activities under paragraph 30.3(1)*"a"* shall be valid for three years.

30.3(3) *Procedure and standards for board approval of continuing education programs/activities.*

a. For non-computer-based continuing education programs/activities, an individual or entity seeking board approval shall:

(1) File an application in the form prescribed by the board without alteration at least 60 days prior to the first scheduled course date;

(2) Attach a copy of the course or activity outline or syllabus which, at a minimum, specifically identifies the course content and a breakdown of the student contact hours; and

(3) Attach a schedule of courses, if known, which indicates the course's or activity's proposed scheduled locations, dates, and times.

b. For computer-based continuing education programs/activities, an individual or entity seeking board approval shall:

(1) File an application in the form prescribed by the board without alteration;

(2) Attach a copy of the course or activity outline or syllabus which, at a minimum, specifically identifies the course content and a breakdown of the student contact hours;

(3) Attach a schedule of courses, if known, which indicates the course's or activity's proposed scheduled locations, dates, and times;

(4) Provide a brief summary of the training product;

(5) Provide a copy of the CD-ROM, DVD, visual aids, or other materials included with the course or activity; and

(6) Provide the names, contact information, and qualifications or résumés of the training designers.

30.3(4) *Board member attendance.* With board approval, board members may attend any board-approved continuing education program/activity for purposes of determining whether the continuing education program/activity complies with these rules. In the event a board member attends a board-approved continuing education program/activity with the purpose of determining whether the continuing education program/activity complies with these rules, the board member may not receive any continuing education credit for those hours in attendance.

[**ARC 8270B**, IAB 11/4/09, effective 10/16/09; **ARC 8475B**, IAB 1/13/10, effective 2/17/10; **ARC 9605B**, IAB 7/13/11, effective 6/21/11; **ARC 9850B**, IAB 11/16/11, effective 12/21/11]

641—30.4(105) Course instructor(s).

30.4(1) *Procedure and standards for board approval of instructors.* An individual seeking board approval to instruct continuing education programs/activities shall:

a. File an application in the form prescribed by the board without alteration;

b. Attach copies of documents, licensures, degrees, and other materials demonstrating compliance with the requirements for the type of continuing education program/activity as set forth below.

(1) If seeking approval to instruct in the content area of the Iowa Occupational Safety and Health Act, an individual must either possess and maintain a current Occupational Safety and Health Act 500, 501, 502, or 503 card or completion certificate, or both, or possess a current train-the-trainer or instructor card or other certification or safety-related degree or diploma issued by the American Heart Association, American Red Cross, National Safety Council, Board of Certified Safety Professionals, or board-approved equivalent.

(2) If seeking approval to instruct in the content area of the Iowa plumbing code or Iowa mechanical code, or both, an individual must:

1. Possess a current license issued by the board at the journey or master level in the applicable discipline under that code,

2. Possess a current license as a professional engineer under Iowa Code chapter 542B,

3. Present evidence of having taught at least eight contact hours in the applicable code within the last three years,

4. Possess a current inspector or plans examiner certificate issued by a code body in the discipline, or

5. Demonstrate equivalent specialized education or training.

(3) If seeking approval to instruct in the content area of a practice discipline, an individual must:

1. Possess a current license issued by the board at the journey or master level in the applicable discipline,

2. Possess a current license as a professional engineer under Iowa Code chapter 542B,

3. Provide evidence of employment as a product representative with manufacturer training,

4. Present evidence of having taught at least eight contact hours in the applicable discipline within the last year, or

5. Demonstrate equivalent specialized education or training.

30.4(2) *Board approval.* Board approval for an instructor under subrule 30.4(1) shall be valid for three years.

[**ARC 8270B**, IAB 11/4/09, effective 10/16/09; **ARC 8475B**, IAB 1/13/10, effective 2/17/10; **ARC 9605B**, IAB 7/13/11, effective 6/21/11; **ARC 9850B**, IAB 11/16/11, effective 12/21/11]

641—30.5(105) Compliance review of continuing education requirements. The board may conduct a review of a licensee's license renewal application to determine compliance with continuing education requirements.

30.5(1) Upon board request, the licensee must submit to the board an individual certificate of completion issued to the licensee or evidence of successful completion of the course from the course sponsor or course instructor. These documents must contain the course title, date(s), contact hours, sponsor's name, and licensee's name. In some instances, licensees will be requested to provide to the board additional information including, but not limited to, program content, objectives, presenters, location, and schedule. An inclusive brochure may meet this requirement.

30.5(2) Upon board request, a licensee must submit all information set forth in subrule 30.5(1) within 30 calendar days following the board's request. The board may grant extensions on an individual basis.

30.5(3) If the submitted materials are incomplete or unsatisfactory and the board determines that the deficiency was the result of good-faith conduct on the part of the licensee, the licensee may be given the opportunity to submit make-up credit to cover the deficit found through the audit. A licensee must complete the continuing education hours and submit documentation establishing completion of the required make-up continuing education hours to the board within 120 calendar days from the date of the board's finding of good-faith conduct.

30.5(4) A licensee's failure to provide the board with an accurate mailing address shall not be an excuse for noncompliance with any requirement set forth in this rule.

[**ARC 8270B**, IAB 11/4/09, effective 10/16/09; **ARC 8475B**, IAB 1/13/10, effective 2/17/10; **ARC 1221C**, IAB 12/11/13, effective 1/15/14]

641—30.6(105) Continuing education exemptions.

30.6(1) *Automatic exemptions.* A licensee shall be exempt from the continuing education requirement during the continuing education compliance period when that person:

a. Served honorably on active duty in the military service; or

b. Resided in another state or district having continuing education requirements for the discipline and met all requirements of that state or district for practice therein; or

c. Was a government employee working in the licensee's specialty and assigned to duty outside the United States; or

d. Was absent from the state but engaged in active practice under circumstances which are approved by the board; or

e. Obtained a journeyperson license by examination provided that the licensee maintains the same renewal date as the licensee's apprentice license. This automatic exemption shall only apply to the licensee's first renewal of the journeyperson license.

30.6(2) *Permissive exemptions.* The board may, in cases involving exceptional hardship or extenuating circumstances, grant an exemption from some or all of the continuing education requirements.

a. A licensee seeking a permissive exemption shall apply to the board, in such form as the board may prescribe.

b. A licensee seeking a permissive exemption shall be required to provide all such documentary evidence as the board may request to establish the exceptional hardship or extenuating circumstances.

c. In the event of a claimed physical or mental disability or illness, the board may request information from a licensed health care professional who can attest to the existence of any such disability or illness.

d. A licensee who applies for a permissive exemption shall be notified in writing of the board's decision.

e. In granting an exemption, the board may impose any such additional conditions on the exemption including, but not limited to, the requirement that the licensee make up a portion of the continuing education requirements.

f. In lieu of granting a full or partial exemption, the board may grant the licensee an extension of time in which to complete the continuing education requirements.

g. The granting of an exemption shall not prohibit a licensee from seeking, or the board from granting, an exemption in a subsequent biennial continuing education compliance period(s).

h. Permissive exemptions shall only be granted in the most exceptional and extraordinary of circumstances.

[**ARC 8270B**, IAB 11/4/09, effective 10/16/09; **ARC 8475B**, IAB 1/13/10, effective 2/17/10; **ARC 9605B**, IAB 7/13/11, effective 6/21/11; **ARC 9850B**, IAB 11/16/11, effective 12/21/11]

641—30.7(105) Continuing education extensions. The board may, in individual cases involving hardship or extenuating circumstances, grant an extension of time within which to fulfill the minimum continuing education requirements.

30.7(1) Hardship or extenuating circumstances include documented circumstances beyond the control of the licensee which prevent attendance at required activities.

30.7(2) All requests for extension must be made prior to the license expiration date.

[**ARC 8270B**, IAB 11/4/09, effective 10/16/09; **ARC 8475B**, IAB 1/13/10, effective 2/17/10]

641—30.8(105) Continuing education reporting requirements.

30.8(1) *Non-computer-based continuing education programs/activities.* For non-computer-based continuing education programs/activities, at the conclusion of each continuing education course, the course instructor shall:

a. Inform each attending licensee that a survey of the course and instructor may be completed and submitted by the licensee to the board through either a board-approved written evaluation form or an Internet-based form.

b. Provide a certificate of completion to each licensee who attends the course. The certificate of completion shall include the following information:

(1) The licensee's full name and board-issued license number;

(2) The course name or title;

(3) The board-approved course identification number;

(4) The date of the course;

(5) The number of program contact hours;

(6) The instructor's full name and board-approved identification number; and

(7) The instructor's signature.

c. Submit to the board a typed or electronic course completion roster within 30 days following the completion of the course. The course completion roster shall contain the following information:

(1) The full name and board-issued license number of each attending licensee;

(2) The course name or title;

(3) The board-approved course identification number;

(4) The date of the course;
(5) The location of the course;
(6) The number of program contact hours;
(7) The instructor's full name and board-approved identification number; and
(8) The instructor's signature.

30.8(2) *Computer-based continuing education programs/activities.* For computer-based continuing education programs/activities under subrule 30.2(3), at the conclusion of each computer-based continuing education course, the person authorized to monitor and verify attendance/course completion shall:

a. Provide a certificate of completion to each licensee who completes the course. The certificate of completion shall include the following information:
(1) The licensee's full name and board-issued license number;
(2) The course name or title;
(3) The board-approved course identification number;
(4) The date the course was completed; and
(5) The number of program contact hours.

b. Submit to the board a typed or electronic course completion roster within 30 days following a licensee's completion of a computer-based continuing education course. The course completion roster shall contain the following information:
(1) The full name and board-issued license number of each attending licensee;
(2) The course name or title;
(3) The board-approved course identification number;
(4) The date of the course;
(5) The location of the course; and
(6) The number of program contact hours.

[**ARC 8270B**, IAB 11/4/09, effective 10/16/09; **ARC 8475B**, IAB 1/13/10, effective 2/17/10]

These rules are intended to implement Iowa Code chapters 105 and 272C and 2013 Iowa Acts, Senate File 427.

[Filed Emergency ARC 8270B, IAB 11/4/09, effective 10/16/09]
[Filed ARC 8475B (Notice ARC 8268B, IAB 11/4/09), IAB 1/13/10, effective 2/17/10]
[Filed Emergency ARC 9605B, IAB 7/13/11, effective 6/21/11]
[Filed ARC 9850B (Notice ARC 9613B, IAB 7/13/11), IAB 11/16/11, effective 12/21/11]
[Filed ARC 1221C (Notice ARC 0933C, IAB 8/7/13), IAB 12/11/13, effective 1/15/14]

CHAPTER 31
PLUMBING AND MECHANICAL SYSTEMS BOARD—WAIVERS OR VARIANCES FROM ADMINISTRATIVE RULES

641—31.1(17A,105,272C) Definitions. For purposes of this chapter:

"Board" means the Iowa plumbing and mechanical systems board.

"Waiver or variance" means action by the board which suspends in whole or in part the requirements or provisions of a rule as applied to an identified person on the basis of the particular circumstances of that person. For simplicity, the term "waiver" shall include both a waiver and a variance.

[**ARC 8359B**, IAB 12/2/09, effective 1/6/10]

641—31.2(17A,105,272C) Scope of chapter. This chapter outlines generally applicable standards and a uniform process for the granting of individual waivers from rules adopted by the board in situations where no other more specifically applicable law provides for waivers. To the extent another more specific provision of law governs the issuance of a waiver from a particular rule, the more specific provision shall supersede this chapter with respect to any waiver from that rule.

[**ARC 8359B**, IAB 12/2/09, effective 1/6/10]

641—31.3(17A,105,272C) Applicability of chapter. The board may only grant a waiver from a rule if the board has jurisdiction over the rule and the requested waiver is consistent with applicable statutes, constitutional provisions, or other provisions of law. The board may not waive requirements created or duties imposed by statute.

[**ARC 8359B**, IAB 12/2/09, effective 1/6/10]

641—31.4(17A,105,272C) Criteria for waiver or variance. In response to a petition completed pursuant to rule 641—31.6(17A,105,272C), the board may in its sole discretion issue an order waiving in whole or in part the requirements of a rule if the board finds, based on clear and convincing evidence, all of the following:

1. The application of the rule would impose an undue hardship on the person for whom the waiver is requested;
2. The waiver from the requirements of the rule in the specific case would not prejudice the substantial legal rights of any person;
3. The provisions of the rule subject to the petition for a waiver are not specifically mandated by statute or another provision of law; and
4. Substantially equal protection of public health, safety, and welfare will be afforded by a means other than that prescribed in the particular rule for which the waiver is requested.

[**ARC 8359B**, IAB 12/2/09, effective 1/6/10]

641—31.5(17A,105,272C) Filing of petition. A petition for a waiver must be submitted in writing to the board as follows:

31.5(1) *License application.* If the petition relates to a license application, the petition shall be made in accordance with the filing requirements for the license in question and submitted to the board administrator.

31.5(2) *Contested cases.* If the petition relates to a pending contested case, the petition shall be filed in the contested case proceeding, using the caption of the contested case, and submitted to the board administrator.

31.5(3) *Other.* If the petition does not relate to a license application or a pending contested case, the petition may be submitted to the board's administrator.

[**ARC 8359B**, IAB 12/2/09, effective 1/6/10]

641—31.6(17A,105,272C) Content of petition. A petition for waiver shall include the following information where applicable and known to the requester:

1. The name, address, and telephone number of the person or entity for which a waiver is being requested, and the case number of any related contested case.

2. A description and citation of the specific rule from which a waiver is requested.

3. The specific waiver requested, including the precise scope and duration.

4. The relevant facts that the petitioner believes would justify a waiver under each of the four criteria described in 641—31.4(17A,105,272C). This statement shall include a signed statement from the petitioner attesting to the accuracy of the facts provided in the petition, and a statement of reasons that the petitioner believes will justify a waiver.

5. A history of any prior contacts between the board and the petitioner relating to the regulated activity or license affected by the proposed waiver, including a description of each affected license held by the requester, any notices of violation, contested case hearings, or investigative reports relating to the regulated activity or license within the last five years.

6. Any information known to the requester regarding the board's treatment of similar cases.

7. The name, address, and telephone number of any public agency or political subdivision which also regulates the activity in question, or which might be affected by the granting of a waiver.

8. The name, address, and telephone number of any person or entity that would be adversely affected by the granting of a petition.

9. The name, address, and telephone number of any person with knowledge of the relevant facts relating to the proposed waiver.

10. Signed releases of information authorizing persons with knowledge regarding the request to furnish the board with information relevant to the waiver.

[**ARC 8359B**, IAB 12/2/09, effective 1/6/10]

641—31.7(17A,105,272C) Additional information. Prior to issuing an order granting or denying a waiver, the board may request additional information from the petitioner relative to the petition and surrounding circumstances. If the petition was not filed in a contested case, the board may, on its own motion or at the petitioner's request, schedule a telephonic or in-person meeting between the petitioner and the board's administrator, a committee of the board, or a quorum of the board.

[**ARC 8359B**, IAB 12/2/09, effective 1/6/10]

641—31.8(17A,105,272C) Notice. The board shall acknowledge a petition upon its receipt in the office of the board's administrator. The board shall ensure that notice of the pending petition and a concise summary of its contents have been provided to all persons to whom notice is required by any provision of law within 30 days of the receipt of the petition. In addition, the board may give notice to other persons. To accomplish this notice provision, the board may require the petitioner to serve the notice on all persons to whom notice is required by any provision of law and provide a written statement to the board attesting that notice has been provided.

[**ARC 8359B**, IAB 12/2/09, effective 1/6/10]

641—31.9(17A,105,272C) Hearing procedures. The provisions of Iowa Code sections 17A.10 to 17A.18A regarding contested case hearings shall apply to any petition for a waiver filed within a contested case, and shall otherwise apply to agency proceedings for a waiver only when the board so provides by rule or order or is required to do so by statute.

[**ARC 8359B**, IAB 12/2/09, effective 1/6/10]

641—31.10(17A,105,272C) Ruling. An order granting or denying a waiver shall be in writing and shall contain a reference to the particular person and rule or portion thereof to which the order pertains, a statement of the relevant facts and reasons upon which the action is based, and a description of the precise scope and duration of the waiver if one is issued.

31.10(1) *Board discretion.* The final decision on whether the circumstances justify the granting of a waiver shall be made at the sole discretion of the board, upon consideration of all relevant factors. Each petition for a waiver shall be evaluated by the board based on the unique, individual circumstances set out in the petition.

31.10(2) *Burden of persuasion.* The burden of persuasion rests with the petitioner to demonstrate by clear and convincing evidence that the board should exercise its discretion to grant a waiver from a board rule.

31.10(3) *Narrowly tailored.* A waiver, if granted, shall provide the narrowest exception possible to the provisions of a rule.

31.10(4) *Administrative deadlines.* When the rule from which a waiver is sought establishes administrative deadlines, the board shall balance the special individual circumstances of the petitioner with the overall goal of uniform treatment of all similarly situated persons.

31.10(5) *Conditions.* The board may place any condition on a waiver that the board finds desirable to protect the public health, safety, and welfare.

31.10(6) *Time period of waiver.* A waiver shall not be permanent unless the petitioner can show that a temporary waiver would be impracticable. If a temporary waiver is granted, there is no automatic right to renewal. At the sole discretion of the board, a waiver may be renewed if the board finds that grounds for a waiver continue to exist.

31.10(7) *Time for ruling.* The board shall grant or deny a petition for a waiver as soon as practicable but, in any event, shall do so within 120 days of its receipt, unless the petitioner agrees to a later date. However, if a petition is filed in a contested case, the board shall grant or deny the petition no later than the time at which the final decision in that contested case is issued.

31.10(8) *When deemed denied.* Failure of the board to grant or deny a petition within the required time period shall be deemed a denial of that petition by the board. However, the board shall remain responsible for issuing an order denying a waiver.

31.10(9) *Service of order.* Within seven days of its issuance, any order issued under this chapter shall be transmitted to the petitioner or the person to whom the order pertains, and to any other person entitled to such notice by any provision of law.

[**ARC 8359B**, IAB 12/2/09, effective 1/6/10]

641—31.11(17A,105,272C) Public availability. All orders granting or denying a waiver petition shall be indexed, filed, and available for public inspection as provided in Iowa Code section 17A.3. Petitions for a waiver and orders granting or denying a waiver petition are public records under Iowa Code chapter 22. Some petitions or orders may contain information the board is authorized or required to keep confidential. The board may accordingly redact confidential information from petitions or orders prior to public inspection.

[**ARC 8359B**, IAB 12/2/09, effective 1/6/10]

641—31.12(17A,105,272C) Summary reports. Semiannually, the board shall prepare a summary report identifying the rules for which a waiver has been granted or denied, the number of times a waiver was granted or denied for each rule, a citation to the statutory provisions implemented by these rules, and a general summary of the reasons justifying the board's actions on waiver requests. If practicable, the report shall detail the extent to which the granting of a waiver has affected the general applicability of the rule itself. Copies of this report shall be available for public inspection and shall be provided semiannually to the administrative rules coordinator and the administrative rules review committee.

[**ARC 8359B**, IAB 12/2/09, effective 1/6/10]

641—31.13(17A,105,272C) Cancellation of a waiver. A waiver issued by the board pursuant to this chapter may be withdrawn, canceled, or modified if, after appropriate notice and hearing, the board issues an order finding any of the following:

1. The petitioner or the person who was the subject of the waiver order withheld or misrepresented material facts relevant to the propriety or desirability of the waiver; or
2. The alternative means for ensuring that the public health, safety and welfare will be adequately protected after issuance of the waiver order have been demonstrated to be insufficient; or
3. The subject of the waiver order has failed to comply with all conditions contained in the order.

[**ARC 8359B**, IAB 12/2/09, effective 1/6/10]

641—31.14(17A,105,272C) Violations. Violation of a condition in a waiver order shall be treated as a violation of the particular rule for which the waiver was granted. As a result, the recipient of a waiver under this chapter who violates a condition of the waiver may be subject to the same remedies or penalties as a person who violates the rule at issue.
[**ARC 8359B**, IAB 12/2/09, effective 1/6/10]

641—31.15(17A,105,272C) Defense. After the board issues an order granting a waiver, the order is a defense within its terms and the specific facts indicated therein for the person to whom the order pertains in any proceeding in which the rule in question is sought to be invoked.
[**ARC 8359B**, IAB 12/2/09, effective 1/6/10]

641—31.16(17A,105,272C) Judicial review. Judicial review of a board's decision to grant or deny a waiver petition may be taken in accordance with Iowa Code chapter 17A. Any appeal to district court shall be taken within 30 days from the date of issuance of the decision by the board pursuant to Iowa Code section 17A.19.
[**ARC 8359B**, IAB 12/2/09, effective 1/6/10]

These rules are intended to implement Iowa Code chapters 17A, 105, and 272C.

[Filed ARC 8359B (Notice ARC 8173B, IAB 9/23/09), IAB 12/2/09, effective 1/6/10]

CHAPTER 32
PLUMBING AND MECHANICAL SYSTEMS BOARD—LICENSEE DISCIPLINE

641—32.1(105,272C) Definitions. For purposes of this chapter, the following definitions apply:

"Board" means the plumbing and mechanical systems board as established pursuant to Iowa Code section 105.3.

"Discipline" means any sanction the board may impose upon licensees.

"Lapsed license" means a license that expired prior to June 30, 2017, and was not renewed within 60 days following its expiration date, or a license that expired on or after June 30, 2017, and was not renewed by the following August 31.

"Licensee" means any person licensed to practice pursuant to Iowa Code chapter 105.

[**ARC 8531B**, IAB 2/24/10, effective 1/26/10; **ARC 1222C**, IAB 12/11/13, effective 1/15/14]

641—32.2(105,272C) Grounds for discipline. The board may impose any of the disciplinary sanctions provided in rule 641—32.3(105,272C) when the board determines that the licensee is guilty of any of the following acts or offenses:

32.2(1) Fraud in procuring a license. Fraud in procuring a license includes, but is not limited to, an intentional perversion of the truth in making application for a license to practice in this state, which includes the following:

a. False representations of a material fact, whether by word or by conduct, by false or misleading allegations, or by concealment of that which should have been disclosed when making application for a license in this state, or

b. Attempting to file or filing with the board or the department of public health any false or forged diploma, certificate, affidavit, identification or qualification in making an application for a license in this state.

32.2(2) Professional incompetence. Professional incompetence includes, but is not limited to:

a. A substantial lack of knowledge or ability to discharge professional obligations within the scope of the applicable licensed trade.

b. A substantial deviation from the standards of learning or skill ordinarily possessed and applied by others licensed in the applicable trade in the state of Iowa acting in the same or similar circumstances.

c. A failure to exercise the degree of care which is ordinarily exercised by the average licensee in the applicable trade acting in the same or similar circumstances.

d. Failure to conform to the minimal standard of acceptable and prevailing practice of a licensee in the applicable trade in this state.

e. Inability to practice in the trade with reasonable skill and safety by reason of illness, drunkenness, excessive use of drugs, narcotics, chemicals, or other type of material or as a result of a mental or physical condition.

f. Being adjudged mentally incompetent by a court of competent jurisdiction.

32.2(3) Knowingly making misleading, deceptive, untrue or fraudulent representations in the practice of the profession or engaging in unethical conduct or practice harmful or detrimental to the public. Proof of actual injury need not be established.

32.2(4) Habitual intoxication or addiction to the use of drugs.

32.2(5) Conviction of a felony related to the profession or occupation of the licensee or the conviction of any felony that would affect the licensee's ability to practice within the profession. A copy of the record or conviction or plea of guilty shall be conclusive evidence of such conviction.

32.2(6) Fraud in representations as to skill or ability.

32.2(7) Use of untruthful or improbable statements in advertisements.

32.2(8) Willful or repeated violations of Iowa Code chapter 105 or 272C.

32.2(9) Violation of a board rule.

32.2(10) Nonpayment of a state debt as evidenced by a certificate of noncompliance issued pursuant to Iowa Code chapter 272D and 641—Chapter 194.

32.2(11) Permitting another person to use the licensee's wall certificate, wallet card, or license number for any purpose.

32.2(12) Failure to timely submit the requested materials in response to a compliance review conducted pursuant to 641—30.5(105).

32.2(13) Failure to meet the continuing education requirements for licensure.

32.2(14) Submission of a false report of continuing education.

32.2(15) Failure to pay any outstanding fees or costs owed to the board.

32.2(16) Acceptance of any fee by fraud or misrepresentation.

32.2(17) Negligence by the licensee in the practice of the trade. Negligence by the licensee in the practice of the trade includes a failure to exercise due care, including negligent delegation of duties or supervision of employees or other individuals, whether or not injury results; or any conduct, practice, or conditions which impair the ability to safely and skillfully practice the trade.

32.2(18) Violation of a law, ordinance, or regulation of this state, or a political subdivision therein, another state, or the United States, which relates to the practice of the profession.

32.2(19) Revocation, suspension, or other disciplinary action taken by a licensing authority of this state, another state, territory, or country; or failure by the licensee to report in writing to the board revocation, suspension, or other disciplinary action taken by a licensing authority within 30 days of the final action. A stay by an appellate court shall not negate this requirement; however, if such disciplinary action is overturned or reversed by a court of last resort, the report shall be expunged from the records of the board.

32.2(20) Failure of a licensee or an applicant for licensure in this state to report any voluntary agreements restricting the practice in the trade in another state, district, territory, or country.

32.2(21) Failure to notify the board of a criminal conviction within 30 days of the action, regardless of the jurisdiction where it occurred.

32.2(22) Failure to notify the board within 30 days after the occurrence of any judgment or settlement of professional negligence claim or action.

32.2(23) Engaging in any conduct that subverts or attempts to subvert a board investigation.

32.2(24) Failure to comply with a subpoena issued by the board or otherwise fail to cooperate with an investigation of the board.

32.2(25) Failure to comply with the terms of a board order or the terms of a settlement agreement or consent order.

32.2(26) Failure to report another licensee to the board for any violations listed in these rules, pursuant to Iowa Code section 272C.9.

32.2(27) Knowingly aiding, assisting, procuring, or advising a person to unlawfully practice a trade included in Iowa Code chapter 105.

32.2(28) Failure to report a change in name or address within 30 days after it occurs.

32.2(29) Representing oneself as a licensed tradesperson when one's license has been suspended or revoked or when the license is on inactive status.

32.2(30) Permitting another person to use the licensee's license for any purpose.

32.2(31) Permitting an unlicensed employee or person under the licensee's control to perform activities that require a license.

32.2(32) Failure to apply and obtain a permit prior to performing work, if required by the state or a political subdivision therein.

32.2(33) Failure to pay all inspection fees, if required by the state or a political subdivision therein.

32.2(34) Failure to pay a permit fee, if required by the state or a political subdivision therein.

32.2(35) Practice outside the scope of the license, which shall include, but not be limited to:

a. Practicing as a journeyperson without the supervision of a master.

b. Practicing in a trade for which the licensee does not hold a board-issued license.

c. Contracting for plumbing or mechanical work in the state of Iowa without a board-issued contractor license.

32.2(36) Practicing on a lapsed license.

32.2(37) Practicing as a contractor without valid bonding or insurance, as required by Iowa Code section 105.19 as amended by 2013 Iowa Acts, Senate File 427.
[**ARC 8531B**, IAB 2/24/10, effective 1/26/10; **ARC 1222C**, IAB 12/11/13, effective 1/15/14]

641—32.3(105,272C) Method of discipline. The board has the authority to impose the following disciplinary sanctions:

1. Revocation of license.
2. Suspension of license until further order of the board or for a specific period.
3. Prohibit permanently, until further order of the board or for a specific period, the licensee's engaging in specified procedures, methods, or acts.
4. Probation.
5. Require additional education or training.
6. Require a reexamination.
7. Order a physical or mental evaluation, or order alcohol and drug screening within a time specified by the board.
8. Impose civil penalties not to exceed $5000.
9. Issue a citation and warning.
10. Such other sanctions allowed by law as may be appropriate.

[**ARC 8531B**, IAB 2/24/10, effective 1/26/10]

641—32.4(272C) Discretion of board. The following factors may be considered by the board in determining the nature and severity of the disciplinary sanction to be imposed:

1. The relative serious nature of the violation as it relates to ensuring a high standard of professional care to the citizens of this state;
2. The facts of the particular violation;
3. Any extenuating facts or other countervailing considerations;
4. The number of prior violations or complaints;
5. The seriousness of prior violations or complaints;
6. Whether remedial action has been taken; and
7. Such other factors as may reflect upon the competency, ethical standards, and professional conduct of the licensee.

[**ARC 8531B**, IAB 2/24/10, effective 1/26/10]

641—32.5(105) Civil penalties. The board may impose civil penalties by order against a person who is not licensed by the board based on the unlawful practices specified in Iowa Code section 105.27(1). In addition to the procedures set forth in Iowa Code chapter 105, this chapter shall apply.

32.5(1) *Unlawful practices.* Practices by an unlicensed person which are subject to civil penalties include, but are not limited to:

a. Acts or practices by unlicensed persons which require licensure to install or repair plumbing, mechanical, HVAC, refrigeration, sheet metal, or hydronic systems under Iowa Code chapter 105.

b. Acts or practices by unlicensed persons which require certification to install or repair medical gas piping systems under Iowa Code chapter 105.

c. Engaging in the business of designing, installing, or repairing plumbing, mechanical, HVAC, refrigeration, sheet metal, or hydronic systems without employing a licensed master.

d. Providing plumbing, mechanical, HVAC, refrigeration, sheet metal, or hydronic systems services on a contractual basis.

e. Use or attempted use of a licensee's certificate or wallet card or use or attempted use of an expired, suspended, revoked, or nonexistent certificate.

f. Falsely impersonating a person licensed under Iowa Code chapter 105 as amended by 2013 Iowa Acts, Senate File 427.

g. Providing false or forged evidence of any kind to the board in obtaining or attempting to obtain a license.

h. Other violations of Iowa Code chapter 105.

i. Knowingly aiding or abetting an unlicensed person or establishment in any activity identified in this rule.

32.5(2) *Investigations.* The board is authorized by Iowa Code subsection 17A.13(1) and Iowa Code chapter 105 to conduct such investigations as are needed to determine whether grounds exist to impose civil penalties against a nonlicensee. Complaint and investigatory files concerning nonlicensees are not confidential except as may be provided in Iowa Code chapter 22.

32.5(3) *Subpoenas.* Pursuant to Iowa Code section 17A.13(1) and Iowa Code chapter 105, the board is authorized in connection with an investigation of an unlicensed person to issue subpoenas to compel persons to testify and to compel persons to produce books, papers, records and any other real evidence, whether or not privileged or confidential under law, which the board deems necessary as evidence in connection with the civil penalty proceeding or relevant to the decision of whether to initiate a civil penalty proceeding. Board procedures concerning investigative subpoenas are set forth in rule 641—34.5(105).

32.5(4) *Notice of intent to impose civil penalties.* The notice of the board's intent to issue an order to require compliance with Iowa Code chapter 105 and to impose a civil penalty shall be served upon the nonlicensee by restricted certified mail, return receipt requested, or by personal service in accordance with Iowa Rule of Civil Procedure 1.305. Alternatively, the nonlicensee may accept service personally or through authorized counsel. The notice shall include the following:

a. A statement of the legal authority and jurisdiction under which the proposed civil penalty would be imposed.

b. Reference to the particular sections of the statutes and rules involved.

c. A short, plain statement of the alleged unlawful practices.

d. The dollar amount of the proposed civil penalty and the nature of the intended order to require compliance with Iowa Code chapter 105.

e. Notice of the nonlicensee's right to a hearing and the time frame in which the hearing must be requested.

f. The address to which written request for hearing must be made.

32.5(5) *Requests for hearings.*

a. Nonlicensees must request a hearing within 30 days of the date the notice is received if served through restricted certified mail, or within 30 days of the date of service if service is accepted or made in accordance with Iowa Rule of Civil Procedure 1.305. A request for hearing must be in writing and is deemed made on the date of the nonmetered United States Postal Service postmark or the date of personal service.

b. If a request for hearing is not timely made, or if the nonlicensee waives in writing the right to hearing and agrees to pay the penalty, the board chairperson, the chairperson's designee, or the board executive may issue an order imposing the civil penalty and requiring compliance with Iowa Code chapter 105, as described in the notice. The order may be mailed by regular first-class mail or served in the same manner as the notice of intent to impose a civil penalty.

c. If a request for hearing is timely made, the board shall issue a notice of hearing and conduct a hearing in the same manner as applicable to disciplinary cases against licensees.

d. Subsequent to the issuance of a notice of hearing under this subrule, the settlement agreement provisions of 641—33.23(272C) shall apply.

e. The notice of intent to issue an order and the order are public records available for inspection and copying in accordance with Iowa Code chapter 22. Copies may be published. Hearings shall be open to the public.

32.5(6) *Factors for board consideration.* The board may consider the following when determining the amount of civil penalty to impose, if any:

a. Whether the amount imposed will be a substantial economic deterrent to the violation.

b. The circumstances leading to or resulting in the violation.

c. The severity of the violation and the risk of harm to the public.

d. The economic benefits gained by the violator as a result of noncompliance.

e. The welfare or best interest of the public.

32.5(7) *Enforcement options.* In addition, or as an alternative, to the administrative process described in these rules, the board may seek an injunction in district court, refer the matter for criminal prosecution, or enter into a consent agreement.

32.5(8) *Judicial review.*

a. A person aggrieved by the imposition of a civil penalty under this rule may seek a judicial review in accordance with Iowa Code section 17A.19.

b. The board shall notify the attorney general of the failure to pay a civil penalty within 30 days after entry of an order or within 10 days following final judgment in favor of the board if an order has been stayed pending appeal.

c. The attorney general may commence an action to recover the amount of the penalty, including reasonable attorney fees and costs.

d. An action to enforce an order under this rule may be joined with an action for an injunction pursuant to Iowa Code section 105.27(4).

[**ARC 8531B**, IAB 2/24/10, effective 1/26/10; **ARC 1222C**, IAB 12/11/13, effective 1/15/14]

641—32.6(105,272C) Collection of delinquent civil penalties and discipline-related debts.

32.6(1) The board may participate in the department of administrative services' income offset program.

32.6(2) Definitions. For purposes of this rule, the following definitions apply:

"Debtor" means any person who owes a debt to the board as a result of a proceeding in which notice and opportunity to be heard was afforded.

"Income offset program" means the program established in Iowa Code section 8A.504 through which the department of administrative services coordinates with state agencies to satisfy liabilities owed to those state agencies.

"Notification of offset" means receipt of actual notice by the board from the department of administrative services that the debtor is entitled to a payment that qualifies for offset.

"Preoffset notice" means the notice required by 32.6(5)*"a."*

32.6(3) The board office may provide the department of administrative services a liability file.

a. With respect to each individual debtor, the liability file shall contain the following:

(1) Information relevant to the identification of the debtor, as required by the department of administrative services and including the debtor's name and social security number or federal identification number,

(2) The amount of liability, and

(3) A written statement declaring the debt to have occurred.

b. The board office shall certify the liability file at least semiannually, as required by the department of administrative services.

c. The board office shall update the liability file:

(1) When necessary to reflect new debtors, and

(2) When the status of a debt changes due to payment of the debt, invalidation of the liability, alternate payment arrangements with the debtor, bankruptcy, or other factors.

32.6(4) Due diligence.

a. Before submitting debtor information to the outstanding liability file, the board office shall make a good faith attempt to collect from the debtor. Such attempt shall include at least all of the following:

(1) A telephone call requesting payment.

(2) An initial letter to the debtor's last discernible address requesting payment within 15 days.

(3) A second letter to the debtor's last discernible address requesting payment within 10 days.

b. The board office shall document due diligence and retain such documentation.

32.6(5) Notification of offset. Within 10 calendar days of receiving notification from the department of administrative services that the debtor is entitled to a payment, the board office shall:

a. Send a preoffset notice to the debtor. The preoffset notice shall inform the debtor of the amount the department intends to claim, and shall include all of the following information:

(1) The board's right to the payment in question.

(2) The board's right to recover the payment through the offset procedure.

(3) The basis of the board's case in regard to the debt.

(4) The right of the debtor to request, in accordance with subrule 32.6(6) and within 15 days of the mailing of the preoffset notice, a split of the payment between parties when the payment in question is jointly owned or otherwise owned by two or more persons.

(5) The debtor's right to appeal the offset, in accordance with subrule 32.6(7) and within 15 days of the mailing of the preoffset notice, and the procedure to follow in that appeal.

(6) The board office's contact information, including a telephone number, for the debtor to contact in case of questions.

b. Notify the department of administrative services that the preoffset notice has been sent to the debtor, and supply a copy of the preoffset notice to the department of administrative services.

32.6(6) Request to divide a jointly or commonly owned right to payment.

a. A debtor who receives a preoffset notice may request release of a joint or common owner's share, if the request is received by the board within 15 days of the date the preoffset notice is mailed.

b. In conjunction with such a request, the debtor shall provide to the board the full name and social security number of any joint or common owner.

c. Upon receipt of such a request, the board office shall notify the department of administrative services of the request.

32.6(7) Appeal process.

a. A debtor who receives a preoffset notice may request an appeal of the underlying debt, if such request is made within 15 days of the date the preoffset notice is mailed.

b. Request for appeal must be submitted in writing to the Iowa Plumbing and Mechanical Systems Board, Attn: Offset Appeals, 321 E. 12th Street, Des Moines, Iowa 50319-0075.

c. If a request for appeal is timely made, the board office shall issue a notice of hearing to the debtor, and also serve a copy upon the assistant attorney general for the board.

d. The appeal shall be conducted as a contested case proceeding pursuant to 641—Chapter 33.

e. If a request for appeal is timely made, the board office shall notify the department of administrative services within 45 days of the notification of offset. The board shall hold a payment in abeyance until the final disposition of the contested liability or offset.

32.6(8) Once any offset has been completed, the board office shall notify the debtor of the action taken, and what balance, if any, still remains owing to the board.

[**ARC 1222C**, IAB 12/11/13, effective 1/15/14]

These rules are intended to implement Iowa Code chapters 105 and 272C.

[Filed Emergency After Notice ARC 8531B (Notice ARC 8363B, IAB 12/2/09), IAB 2/24/10, effective 1/26/10]

[Filed ARC 1222C (Notice ARC 0932C, IAB 8/7/13), IAB 12/11/13, effective 1/15/14]

CHAPTER 33
PLUMBING AND MECHANICAL SYSTEMS BOARD—CONTESTED CASES

641—33.1(17A,105,272C) Scope and applicability. This chapter applies to contested case proceedings conducted by the plumbing and mechanical systems board.
[**ARC 9057B**, IAB 9/8/10, effective 10/13/10]

641—33.2(17A,105,272C) Definitions. Except where otherwise specifically defined by law:

"Board" means the plumbing and mechanical systems board as established pursuant to 2009 Iowa Code Supplement section 105.3.

"Contested case" means a proceeding defined by Iowa Code section 17A.2(5) and includes any matter defined as a no factual dispute contested case under Iowa Code section 17A.10A.

"Executive officer" means the executive officer for the plumbing and mechanical systems board.

"Issuance" means the date of mailing of a decision or order, or date of delivery if service is by other means, unless another date is specified by rule or in the order.

"License" means a license, registration, certificate, permit or other form of practice permission required by Iowa Code chapter 105.

"Party" means the state of Iowa, as represented by the assistant attorney general assigned to prosecute the case on behalf of the public interest, the respondent, or an intervenor.

"Presiding officer" means the board, a panel of board members, or a panel of nonboard member specialists as provided in Iowa Code subsections 272C.6(1) and (2) in a disciplinary contested case.
[**ARC 9057B**, IAB 9/8/10, effective 10/13/10]

641—33.3(17A) Time requirements.

33.3(1) Time shall be computed as provided in Iowa Code subsection 4.1(34).

33.3(2) For good cause, the presiding officer may extend or shorten the time to take any action, except as precluded by statute. Except for good cause stated in the record, before extending or shortening the time to take any action, the presiding officer shall afford all parties an opportunity to be heard or to file written arguments.
[**ARC 9057B**, IAB 9/8/10, effective 10/13/10]

641—33.4(17A,272C) Probable cause. In the event the board finds there is probable cause for taking disciplinary action against a licensee, the board shall order a contested case hearing commenced by the filing and service of a statement of charges.
[**ARC 9057B**, IAB 9/8/10, effective 10/13/10]

641—33.5(17A,272C) Informal settlement. The board, board staff or a board committee may attempt to informally settle a disciplinary case before filing a statement of charges and notice of hearing. If the board and the licensee agree to a settlement of the case, a statement of charges shall be filed simultaneously with a consent order. The statement of charges and consent order may be separate documents or may be combined in one document. By electing to sign a consent order, the licensee waives all rights to a hearing and all attendant rights. The consent order shall have the force and effect of a final disciplinary order entered in a contested case and is an open record. Matters not involving licensee discipline which may culminate in a contested case may also be settled through consent order. Procedures governing settlement after notice of hearing is served are described in rule 641—33.23(272C).
[**ARC 9057B**, IAB 9/8/10, effective 10/13/10]

641—33.6(17A) Statement of charges.

33.6(1) *Legal review.* Every statement of charges prepared by the board shall be reviewed by the office of the attorney general before it is filed.

33.6(2) *Delivery.* Delivery of the statement of charges constitutes the commencement of the contested case proceeding. Delivery may be executed by:

a. Personal service as provided in the Iowa Rules of Civil Procedure; or

b. Certified mail, return receipt requested; or

c. Publication as provided in the Iowa Rules of Civil Procedure.

33.6(3) *Contents.* The statement of charges shall contain the following information:

a. A statement by the board showing that there is probable cause to file the statement of charges;

b. A statement of the time, place, and nature of the hearing;

c. A statement of the legal authority and jurisdiction under which the hearing is to be held;

d. A reference to the particular sections of the statutes and rules involved;

e. A short and plain statement of the matters asserted. This statement shall contain sufficient detail to give the respondent fair notice of the allegations so the respondent may adequately respond to the charges, and to give the public notice of the matters at issue;

f. Identification of all parties including the name, address and telephone number of the person who will act as advocate for the board or the state and of parties' counsel where known;

g. Reference to the procedural rules governing conduct of the contested case proceeding;

h. Reference to the procedural rules governing informal settlement;

i. Identification of the presiding officer as the board, a panel of board members, or a panel of nonboard member specialists as provided in Iowa Code subsections 272C.6(1) and (2); and

j. A statement requiring the respondent to submit an answer pursuant to subrule 33.13(2) within 20 days after service of the statement of charges.

[**ARC 9057B**, IAB 9/8/10, effective 10/13/10]

641—33.7(17A) Requests for contested case proceeding. Any person claiming an entitlement to a contested case evidentiary hearing shall file a written request for such a proceeding within the time specified by the particular rules or statutes governing the subject matter or, in the absence of such law, the time specified in the board action in question. The request for a contested case proceeding shall state the name and address of the requester; identify the specific board action which is disputed; describe issues of material fact in dispute; and, where the requester is represented by a lawyer, identify the provisions of law or precedent requiring or authorizing the holding of a contested case proceeding in the particular circumstances involved. If the board grants the request, the board shall issue a notice of hearing. If the board denies the request, the board shall issue a written order specifying the basis for the denial.

[**ARC 9057B**, IAB 9/8/10, effective 10/13/10]

641—33.8(105) Legal representation. Following the filing of a statement of charges, the office of the attorney general shall be responsible for the legal representation of the public interest in all proceedings before the board. The assistant attorney general assigned to prosecute a contested case before the board shall not represent the board in that case but shall represent the public interest. All other parties to a proceeding before the board shall be entitled to have counsel at their own expense.

[**ARC 9057B**, IAB 9/8/10, effective 10/13/10]

641—33.9(17A,105,272C) Presiding officer in a disciplinary contested case. The presiding officer in a disciplinary contested case shall be the board, a panel of not less than three board members who are licensed under Iowa Code chapter 105, or a panel of nonboard member specialists as provided in Iowa Code subsections 272C.6(1) and (2). The board or a panel of board members when acting as presiding officer may request that an administrative law judge perform certain functions as an aid to the board or board panel, such as ruling on prehearing motions, conducting the prehearing conference, ruling on evidentiary objections at hearing, assisting in deliberation, or drafting the written decision for review by the board or board panel. Decisions of the administrative law judge serving in this capacity are subject to the interlocutory appeal provisions of rule 641—33.29(17A).

[**ARC 9057B**, IAB 9/8/10, effective 10/13/10]

641—33.10(17A) Presiding officer in a nondisciplinary contested case.

33.10(1) A nondisciplinary contested case includes license denial proceedings. Any party in a nondisciplinary contested case, including an appeal of a denial of licensure, who wishes to request that the presiding officer assigned to render a proposed decision be an administrative law judge employed

by the department of inspections and appeals must file a written request within 20 days after service of a notice of hearing which identifies or describes the presiding officer as the board.

33.10(2) The board may deny the request only upon a finding that one or more of the following apply:

a. There is a compelling need to expedite issuance of a final decision in order to protect the public health, safety, or welfare.

b. An administrative law judge with the qualifications identified in subrule 33.10(4) is unavailable to hear the case within a reasonable time.

c. The case involves significant policy issues of first impression that are inextricably intertwined with the factual issues presented.

d. The demeanor of the witnesses is not likely to be dispositive in resolving the disputed factual issues.

e. Funds are unavailable to pay the costs of an administrative law judge and an interagency appeal.

f. The request was not timely filed.

g. The request is not consistent with a specified statute.

33.10(3) The board shall issue a written ruling specifying the grounds for its decision within 20 days after a request for an administrative law judge is filed. If the ruling is contingent upon the availability of an administrative law judge with the qualifications identified in subrule 33.10(4), the parties shall be notified at least 10 days prior to hearing if a qualified administrative law judge will not be available.

33.10(4) An administrative law judge assigned to act as presiding officer in a nondisciplinary contested case shall possess a juris doctorate degree.

33.10(5) Except as otherwise provided by a provision or law, all rulings by an administrative law judge acting as presiding officer in a nondisciplinary contested case are subject to appeal to the board. A party must seek any available intra-agency appeal in order to exhaust adequate administrative remedies. Such appeals must be filed within 10 days of the date of the issuance of the challenged ruling but no later than the time for compliance with the order or the date of the hearing, whichever occurs first.

33.10(6) Unless otherwise provided by law, when reviewing a proposed decision of an administrative law judge in a nondisciplinary contested case upon appeal, the board shall possess the powers and shall comply with the provisions of this chapter which apply to presiding officers.

[**ARC 9057B**, IAB 9/8/10, effective 10/13/10]

641—33.11(17A) Disqualification.

33.11(1) A presiding officer or other person shall withdraw from participation in the making of any proposed or final decision in a contested case if that person:

a. Has a personal bias or prejudice concerning a party or a representative of a party;

b. Has personally investigated, prosecuted, or advocated, in connection with that case, the specific controversy underlying that case, another pending factually related contested case, or a pending factually related controversy that may culminate in a contested case involving the same parties (if the licensee elects to appear before the board in the investigative process pursuant to rule 641—34.7(17A), the licensee waives this provision);

c. Is subject to the authority, direction or discretion of any person who has personally investigated, prosecuted or advocated, in connection with that contested case, the specific controversy underlying that contested case, or a pending factually related contested case or controversy involving the same parties;

d. Has acted as counsel to any person who is a private party to that proceeding within the past two years;

e. Has a personal financial interest in the outcome of the case or any other significant personal interest that could be substantially affected by the outcome of the case;

f. Has a spouse or relative within the third degree of relationship who:

(1) Is a party to the case, or an officer, director or trustee of a party;

(2) Is a lawyer in the case;

(3) Is known to have an interest that could be substantially affected by the outcome of the case; or

(4) Is likely to be a material witness in the case; or

g. Has any other legally sufficient cause to withdraw from participation in the decision making in that case.

33.11(2) The term "personally investigated" means taking affirmative steps to interview witnesses directly or to obtain documents or other information directly. The term "personally investigated" does not include:

a. General direction and supervision of assigned investigators;

b. Unsolicited receipt of information which is relayed to assigned investigators;

c. Review of another person's investigative work product in the course of determining whether there is probable cause to initiate a proceeding; or

d. Exposure to factual information while performing other board functions, including fact gathering for purposes other than investigation of the matter which culminates in a contested case.

33.11(3) Factual information relevant to the merits of a contested case received by a person who later serves as presiding officer in that case shall be disclosed if required by Iowa Code section 17A.17(3) and subrule 33.27(9).

33.11(4) By electing to participate in an appearance before the board pursuant to rule 641—34.7(17A), the licensee waives any objection to a board member's participating as a decision maker in a contested case proceeding on the grounds that the board member "personally investigated" the matter under this provision.

33.11(5) In a situation where a presiding officer or other person knows of information which might reasonably be deemed to be a basis for disqualification and decides voluntary withdrawal is unnecessary, that person shall submit the relevant information from the records by affidavit and shall provide for the record a statement of the reasons for the determination that withdrawal is unnecessary.

[**ARC 9057B**, IAB 9/8/10, effective 10/13/10]

641—33.12(17A) Consolidation—severance.

33.12(1) *Consolidation.* The presiding officer may consolidate any or all matters at issue in two or more contested cases where:

a. The matters involve common parties or common questions of fact or law;

b. Consolidation would expedite and simplify consideration of the issues involved; and

c. Consolidation would not adversely affect the rights of any of the parties to those proceedings.

33.12(2) *Severance.* The presiding officer may, for good cause shown, order any contested case proceeding or portions thereof severed.

[**ARC 9057B**, IAB 9/8/10, effective 10/13/10]

641—33.13(17A) Pleadings.

33.13(1) *Pleadings.* Pleadings may be required by rule, by the statement of charges, or by order of the presiding officer.

33.13(2) *Answer.* An answer shall be filed within 20 days of service of the statement of charges.

a. An answer shall:

(1) Identify on whose behalf it is filed;

(2) Set forth the name, address and telephone number of the person filing the answer, the person on whose behalf it is filed, and the attorney, if any, representing that person;

(3) Specifically admit, deny, or otherwise answer all material allegations of the statement of charges; and

(4) Set forth any facts deemed necessary to show an affirmative defense and contain as many additional defenses as the respondent may claim.

b. The presiding officer may refuse to consider any defense not raised in the answer which could have been raised on the basis of facts known when the answer was filed if any party would be prejudiced.

33.13(3) *Amendments.* Any notice of hearing or statement of charges may be amended before a responsive pleading has been filed. Otherwise, a party may amend a pleading only with the consent of the other parties or at the discretion of the presiding officer who may impose terms or grant a continuance.

[**ARC 9057B**, IAB 9/8/10, effective 10/13/10; **ARC 1223C**, IAB 12/11/13, effective 1/15/14]

641—33.14(17A) Service and filing.

33.14(1) *Service—when requested.* Except where otherwise provided by law, every document filed in a contested case proceeding shall be served upon each of the parties of record to the proceeding, including the person designated as prosecutor for the state, simultaneously with its filing. Except for the original statement of charges and an application for rehearing as provided in Iowa Code section 17A.16(2), the party filing a document is responsible for service on all parties.

33.14(2) *Service—how made.* Service upon a party represented by an attorney shall be made upon the attorney unless otherwise ordered. Service is made by delivery or by mailing a copy to the person's last-known address. Service by mail is completed upon mailing, except where otherwise specifically provided by statute, rule, or order.

33.14(3) *Filing—when required.* After the statement of charges, all documents in a contested case proceeding shall be filed with the board. All documents that are required to be served upon a party shall be filed simultaneously with the board.

33.14(4) *Filing—when made.* Except where otherwise provided by law, a document is deemed filed at the time it is delivered to the Plumbing and Mechanical Systems Board, Lucas State Office Building, 321 E. 12th Street, Des Moines, Iowa 50319-0075; delivered to an established courier service for immediate delivery to that office; or mailed by first-class mail or state interoffice mail to that office, so long as there is proof of mailing.

33.14(5) *Proof of mailing.* Proof of mailing includes:

a. A legible United States Postal Service postmark on the envelope, or

b. A certificate of service, or

c. A notarized affidavit, or

d. A certification in substantially the following form:

I certify under penalty of perjury and pursuant to the laws of Iowa that, on (date of mailing), I mailed copies of (describe document) addressed to the Plumbing and Mechanical Systems Board, Lucas State Office Building, 321 E. 12th Street, Des Moines, Iowa 50319-0075, and to the names and addresses of the parties listed below by depositing the same in (a United States Post Office mailbox with correct postage properly affixed or state interoffice mail).

_____ _____

(Date) (Signature)

[**ARC 9057B**, IAB 9/8/10, effective 10/13/10]

641—33.15(17A) Discovery.

33.15(1) Discovery procedures applicable in civil actions are applicable in contested cases. Unless lengthened or shortened by these rules, by order of the presiding officer, or by agreement of the parties, time periods for compliance with discovery shall be as provided in the Iowa Rules of Civil Procedure.

33.15(2) Any motion relating to discovery shall allege that the moving party has previously made a good faith attempt to resolve the discovery issues involved with the opposing party. Motions in regard to discovery shall be ruled upon by the presiding officer. Opposing parties shall be afforded the opportunity to respond within 10 days of the filing of the motion unless the time is shortened as provided in subrule 33.15(1). The presiding officer may rule on the basis of the written motion and any response, or may order argument on the motion.

33.15(3) Evidence obtained in discovery may be used in the contested case proceeding if that evidence would otherwise be admissible in that proceeding.

[**ARC 9057B**, IAB 9/8/10, effective 10/13/10]

641—33.16(17A,272C) Subpoenas in a contested case.

33.16(1) Subpoenas issued in a contested case may compel the attendance of witnesses at deposition or hearing and may compel the production of books, papers, records, or other real evidence. A command to produce evidence or to permit inspection may be joined with a command to appear at deposition or hearing or may be issued separately. Subpoenas shall be issued by the executive officer or designee upon

written request. In the case of a request for a subpoena of mental health records, the request must confirm compliance with the following conditions prior to the issuance of the subpoena:

a. The nature of the issues in the case reasonably justifies the issuance of the requested subpoena;

b. Adequate safeguards have been established to prevent unauthorized disclosure;

c. An express statutory mandate, articulated public policy, or other recognizable public interest favors access; and

d. An attempt was made to notify the patient to secure an authorization from the patient for the release of the records at issue.

33.16(2) A request for a subpoena shall include the following information, as applicable, unless the subpoena is requested in order to compel testimony or documents for rebuttal or impeachment purposes:

a. The name, address, and telephone number of the person requesting the subpoena;

b. The name and address of the person to whom the subpoena shall be directed;

c. The date, time, and location at which the person shall be commanded to attend and give testimony;

d. Whether the testimony is requested in connection with a deposition or hearing;

e. A description of the books, papers, records, or other real evidence requested;

f. The date, time, and location for production, or inspection and copying; and

g. In the case of a subpoena request for mental health records, confirmation that the conditions described in subrule 33.16(1) have been satisfied.

33.16(3) Each subpoena shall contain, as applicable:

a. The caption of the case;

b. The name, address, and telephone number of the person who requested the subpoena;

c. The name and address of the person to whom the subpoena is directed;

d. The date, time, and location at which the person is commanded to appear;

e. Whether testimony is commanded in connection with a deposition or hearing;

f. A description of the books, papers, records, or other real evidence the person is commanded to produce;

g. The date, time, and location for production, or inspection and copying;

h. The time within which a motion to quash or modify the subpoena must be filed;

i. The signature, address, and telephone number of the board executive officer or designee;

j. The date of issuance; and

k. A return of service.

33.16(4) Unless a subpoena is requested in order to compel testimony or documents for rebuttal or impeachment purposes, the executive officer or designee shall mail the subpoena to the requesting party, with a copy to the opposing party. The person who requested the subpoena is responsible for serving the subpoena upon the subject of the subpoena.

33.16(5) Any person who is aggrieved or adversely affected by compliance with the subpoena, or any party to the contested case, who desires to challenge the subpoena must, within 14 days after service of the subpoena, or before the time specified for compliance if such time is less than 14 days, file with the board a motion to quash or modify the subpoena. The motion shall describe the legal reasons why the subpoena should be quashed or modified and may be accompanied by legal briefs or factual affidavits.

33.16(6) Upon receipt of a timely motion to quash or modify a subpoena, the board may request an administrative law judge to hold a hearing and issue a decision, or the board may conduct the hearing and issue a decision. Oral argument may be scheduled at the discretion of the board or the administrative law judge. The administrative law judge or the board may quash or modify the subpoena, deny the motion, or issue an appropriate protective order.

33.16(7) A person who is aggrieved by a ruling of an administrative law judge and who desires to challenge that ruling must appeal the ruling to the board by serving on the board's executive director, either in person or by certified mail, a notice of appeal within ten days after service of the decision of the administrative law judge.

33.16(8) If the person contesting the subpoena is not a party to the contested case, the board's decision is final for purposes of judicial review. If the person contesting the subpoena is a party to

the contested case, the board's decision is not final for purposes of judicial review until there is a final decision in the contested case.
[**ARC 9057B**, IAB 9/8/10, effective 10/13/10]

641—33.17(17A) Motions.

33.17(1) No technical form for motions is required. However, prehearing motions must be in writing, state the grounds for relief, and state the relief sought.

33.17(2) Any party may file a written response to a motion within ten days after the motion is served, unless the time period is extended or shortened by the presiding officer. The presiding officer may consider a failure to respond within the required time period in ruling on the motion.

33.17(3) The presiding officer may schedule oral argument on any motion. If the board requests that an administrative law judge issue a ruling on a prehearing motion, the ruling is subject to interlocutory appeal pursuant to rule 641—33.29(17A).

33.17(4) Motions pertaining to the hearing, except motions for summary judgment, must be filed and served at least five days prior to the date of the hearing unless there is good cause for permitting later action or the time for such action is lengthened or shortened by rule of the board or an order of the presiding officer.

33.17(5) Motions for summary judgment. Motions for summary judgment shall comply with the requirements of Iowa Rule of Civil Procedure 1.981 and shall be subject to disposition according to the requirements of that rule to the extent such requirements are not inconsistent with the provisions of this rule or any other provision of law governing the procedure in contested cases.

a. Motions for summary judgment must be filed and served at least 20 days prior to the scheduled hearing date, or other time period determined by the presiding officer. Any party resisting the motion shall file and serve a resistance within 10 days, unless otherwise ordered by the presiding officer, from the date a copy of the motion was served.

b. The time fixed for hearing or nonoral submission shall be not less than 15 days after the filing of the motion, unless a shorter time is ordered by the presiding officer.

c. A summary judgment order rendered on all issues in a contested case is subject to rehearing pursuant to rule 641—33.32(17A,272C) and appeal pursuant to rule 641—33.30(17A,272C).
[**ARC 9057B**, IAB 9/8/10, effective 10/13/10]

641—33.18(17A) Withdrawals. A party requesting a contested case proceeding may withdraw that request prior to the hearing upon written notice filed with the board and served on all parties. Unless otherwise ordered by the board, a withdrawal shall be with prejudice.
[**ARC 9057B**, IAB 9/8/10, effective 10/13/10]

641—33.19(17A) Intervention.

33.19(1) *Motion.* A motion for leave to intervene in a contested case proceeding shall state the grounds for the proposed intervention, the position and interest of the proposed intervenor, and the possible impact of intervention on the proceeding. A proposed answer or petition in intervention shall be attached to the motion. Any party may file a response within 14 days of service of the motion to intervene unless the time period is extended or shortened by the presiding officer.

33.19(2) *When filed.* Motion for leave to intervene shall be filed as early in the proceeding as possible to avoid adverse impact on existing parties or the conduct of the proceeding. Unless otherwise ordered, a motion for leave to intervene shall be filed before the prehearing conference, if any, or at least 20 days before the date scheduled for hearing. Any later motion must contain a statement of good cause for the failure to file in a timely manner. Unless inequitable or unjust, an intervenor shall be bound by any agreement, arrangement, or other matter previously raised in the case. Requests by untimely intervenors for continuances which would delay the proceeding will ordinarily be denied.

33.19(3) *Grounds for intervention.* The movant shall demonstrate that:

a. Intervention would not unduly prolong the proceedings or otherwise prejudice the rights of existing parties;

b. The movant is likely to be aggrieved or adversely affected by a final order in the proceeding; and

c. The interests of the movant are not adequately represented by existing parties.

33.19(4) *Effect of intervention.* If appropriate, the presiding officer may order consolidation of the petitions and briefs of different parties whose interests are aligned with each other and limit the number of representatives allowed to participate actively in the proceedings. A person granted leave to intervene is a party to the proceeding. The order granting intervention may restrict the issues that may be raised by the intervenor or otherwise condition the intervenor's participation in the proceeding.
[**ARC 9057B**, IAB 9/8/10, effective 10/13/10]

641—33.20(17A) Telephone proceedings. The presiding officer may, on the officer's own motion or as requested by a party, order hearings or argument to be held by telephone conference or other electronic means in which all parties have an opportunity to participate. The presiding officer will determine the location of the parties and witnesses for telephone or other electronic hearings. The convenience of the witnesses or parties, as well as the nature of the case, will be considered when location is chosen. Disciplinary hearings will generally not be held by telephone or electronic means in the absence of consent by all parties, but the presiding officer may permit any witness to testify by telephone. Parties shall disclose at or before the prehearing conference if any witness will be testifying by telephone. Objections, if any, shall be filed with the board and served on all parties at least three business days in advance of hearing.
[**ARC 9057B**, IAB 9/8/10, effective 10/13/10]

641—33.21(17A) Prehearing conferences.

33.21(1) Any party may request a prehearing conference. Prehearing conferences shall be conducted by the executive officer or designee, who may request the assistance of an administrative law judge. A written request for prehearing conference or an order for prehearing conference on the executive officer's own motion shall be filed not less than ten days prior to the hearing date. A prehearing conference shall be scheduled not less than five business days prior to the hearing date. The executive officer shall set a prehearing conference in all licensee disciplinary cases and provide notice of the date and time in the notice of hearing. Written notice of the prehearing conference shall be given by the executive officer to all parties. For good cause the executive officer may permit variances from this rule.

33.21(2) The parties at a prehearing conference shall be prepared to discuss the following subjects, and the executive officer or administrative law judge may issue appropriate orders concerning:

a. The possibility of settlement.

b. The entry of a scheduling order to include deadlines for completion of discovery.

c. Stipulations of law or fact.

d. Stipulations on the admissibility of evidence.

e. Submission of expert or other witness lists. Witness lists may be amended subsequent to the prehearing conference within the time limits established by the executive officer or administrative law judge at the prehearing conference. Any such amendments must be served on all parties. Witnesses not listed on the final witness list may be excluded from testifying unless there was good cause for the failure to include their names.

f. Submission of exhibit lists. Exhibit lists may be amended subsequent to the prehearing conference within the time limits established by the executive director or administrative law judge at the prehearing conference. Other than rebuttal exhibits, exhibits that are not listed on the final exhibit list may be excluded from admission into evidence unless there was good cause for the failure to include them.

g. Stipulations for waiver of any provision of law.

h. Identification of matters which the parties intend to request to be officially noticed.

i. Consideration of any additional matters which will expedite the hearing.

33.21(3) Prehearing conferences may be conducted by telephone unless otherwise ordered.
[**ARC 9057B**, IAB 9/8/10, effective 10/13/10]

641—33.22(17A) Continuances.

33.22(1) Unless otherwise provided, applications for continuance shall be filed with the board at least seven days before the date scheduled for hearing. If the application for continuance is not contested, the executive officer or designee shall issue the appropriate order. If the application for continuance is contested, the matter shall be heard by the board or delegated by the board to an administrative law judge.

33.22(2) A written application for continuance shall:

a. Be made at the earliest possible time and no less than seven days before the hearing except in case of unanticipated emergencies;

b. State the specific reasons for the request for continuance; and

c. Be signed by the requesting party or the party's representative.

33.22(3) An oral application for continuance may be made if the presiding officer waives the requirement for a written motion. However, a party making such an oral application for a continuance must confirm that request by written application within five days after the oral request unless that requirement is waived by the presiding officer.

33.22(4) No application for continuance shall be made or granted without notice to all parties except in an emergency where notice is not feasible. The board may waive notice of such requests for a particular case or an entire class of cases.

33.22(5) The board or administrative law judge may require documentation of any grounds for continuance. In determining whether to grant a continuance, the board or administrative law judge may consider:

a. Prior continuances;

b. The interests of all parties;

c. The public interest;

d. The likelihood of informal settlement;

e. The existence of an emergency;

f. Any objection;

g. Any applicable time requirements;

h. The existence of a conflict in the schedules of counsel, parties, or witnesses;

i. The timeliness of the request; and

j. Other relevant factors.

[**ARC 9057B**, IAB 9/8/10, effective 10/13/10]

641—33.23(272C) Settlement agreements.

33.23(1) Settlement negotiations after the notice of hearing is served may be initiated by the licensee or other respondent, the prosecuting attorney, the board's executive officer, or the board chair or chair's designee.

33.23(2) The board chair or chair's designee shall have authority to negotiate on behalf of the board but shall not have the authority to bind the board to a particular terms of settlement.

33.23(3) The respondent is not obligated to participate in settlement negotiations. The respondent's initiation or consent to settlement negotiations constitutes a waiver of notice and opportunity to be heard during the settlement negotiation pursuant to Iowa Code section 17A.17 and rule 641—33.27(17A). Thereafter, the prosecuting attorney is authorized to discuss informal settlement with the board chair or chair's designee, and the designated board member is not disqualified from participating in the adjudication of the contested case.

33.23(4) Unless designated to negotiate, no member of the board shall be involved in settlement negotiation until a written consent order is submitted to the full board for approval. No informal settlement shall be submitted to the full board unless it is in final written form executed by the respondent. By signing the proposed consent order, the respondent authorizes the prosecuting attorney or executive officer to have ex parte communications with the board related to the terms of the settlement. If the board fails to approve the consent order, it shall be of no force and effect to either party and shall not be admissible at hearing. Upon rejecting a proposed consent order, the board may suggest alternative terms of settlement, which the respondent is free to accept or reject.

33.23(5) If the board and respondent agree to a consent order, the consent order shall constitute the final decision of the board. By electing to resolve a contested case through consent order, the respondent waives all rights to a hearing and attendant rights. A consent order in a licensee disciplinary case shall have the force and effect of a final disciplinary order entered in a contested case and may be published as provided in subrule 33.30(1).
[**ARC 9057B**, IAB 9/8/10, effective 10/13/10]

641—33.24(17A) Hearing procedures. The presiding officer shall be in control of the proceedings and shall have the authority to administer oaths and to admit or exclude testimony or other evidence and shall rule on all motions and objections. The board may request that an administrative law judge assist the board by performing any of these functions.

33.24(1) *Examination of witnesses.* All witnesses shall be sworn or affirmed by the presiding officer or the court reporter, and shall be subject to cross-examination. Board members and the administrative law judge have the right to examine witnesses at any stage of a witness's testimony. The presiding officer may limit questioning in a manner consistent with law.

33.24(2) *Public hearing.* The hearing shall be open to the public unless a licensee or licensee's attorney requests in writing that a licensee disciplinary hearing be closed to the public.

33.24(3) *Record of proceedings.* Oral proceedings shall be recorded either by mechanical or electronic means or by certified shorthand reporters. Oral proceedings or any part thereof shall be transcribed at the request of any party with the expense of the transcription charged to the requesting party. The recording or stenographic notes of oral proceedings or the transcription shall be filed with and maintained by the board for at least five years from the date of decision.

33.24(4) *Order of proceedings.* Before testimony is presented, the record shall show the identities of any board members present, the identity of the administrative law judge, the identities of the primary parties and their representatives, and the fact that all testimony is being recorded. In contested cases initiated by the board, such as licensee discipline, hearings shall generally be conducted in the following order, subject to modification at the discretion of the board:

a. The presiding officer or designee may read a summary of the charges and answers thereto and other responsive pleadings filed by the respondent prior to the hearing.

b. The assistant attorney general representing the state's interest before the board may make a brief opening statement, which may include a summary of charges and the names of any witnesses and documents to support such charges.

c. Each respondent shall be offered the opportunity to make an opening statement, including the names of any witnesses the respondent(s) desires to call in defense. A respondent may elect to make the opening statement just prior to the presentation of evidence by the respondent(s).

d. The presentation of evidence on behalf of the state.

e. The presentation of evidence on behalf of the respondent(s).

f. Rebuttal evidence on behalf of the state, if any.

g. Rebuttal evidence on behalf of the respondent(s), if any.

h. Closing arguments first on behalf of the state, then on behalf of the respondent(s), and then on behalf of the state, if any. The order of proceedings shall be tailored to the nature of the contested case. In license reinstatement hearings, for example, the respondent will generally present evidence first because the respondent is obligated to present evidence in support of the respondent's application for reinstatement pursuant to rule 641—33.40(17A,272C). In license denial hearings, the state will generally first establish the basis for the board's denial of licensure, but thereafter the applicant has the burden of establishing the conditions for licensure pursuant to rule 641—33.36(17A,105,272C).

33.24(5) *Decorum.* The presiding officer shall maintain the decorum of the hearing and may refuse to admit or may expel anyone whose conduct is disorderly.

33.24(6) *Immunity.* The presiding officer shall have authority to grant immunity from disciplinary action to a witness, as provided by Iowa Code section 272C.6(3), but only upon the unanimous vote of all members of the board hearing the case. The official record of the hearing shall include the reasons for granting the immunity.

33.24(7) *Sequestering witnesses*. The presiding officer, on the officer's own motion or upon the request of a party, may sequester witnesses.
[**ARC 9057B**, IAB 9/8/10, effective 10/13/10]

641—33.25(17A) Evidence.

33.25(1) The presiding officer shall rule on the admissibility of evidence and may, where appropriate, take official notice of facts in accordance with all applicable requirements of law.

33.25(2) Stipulation of facts is encouraged. The presiding officer may make a decision based on stipulated facts.

33.25(3) Evidence in the proceeding shall be confined to the issues as to which the parties required notice prior to the hearing unless a party waives the party's right to such notice or the presiding officer determines that good cause justifies expansion of the issues. If the presiding officer decides to admit evidence on issues outside the scope of the notice over the objection of a party who did not have actual notice of those issues, that party, upon timely request, shall receive a continuance sufficient to amend pleadings and to prepare on the additional issue.

33.25(4) The party seeking admission of an exhibit must provide the opposing party with an opportunity to examine the exhibit prior to the ruling on its admissibility. Copies of documents shall be provided to opposing parties. All exhibits admitted into evidence shall be appropriately marked and be made part of the record.

33.25(5) Any party may object to specific evidence or may request limits on the scope of any examination or cross-examination. Such an objection must be timely and shall be accompanied by a brief statement of the grounds upon which it is based. The objection, the ruling on the objection, and the reasons for the ruling shall be noted in the record. The presiding officer may rule on the objection at the time it is made or may reserve a ruling until the written decision.

33.25(6) Whenever evidence is ruled inadmissible, the party offering that evidence may submit an offer of proof on the record. The party making the offer of proof for excluded oral testimony shall briefly summarize the testimony or, with permission of the presiding officer, present the testimony. If the excluded evidence consists of a document or exhibit, it shall be marked as part of an offer of proof and inserted in the record.

33.25(7) Irrelevant, immaterial and unduly repetitious evidence should be excluded. A finding will be based upon the kind of evidence upon which reasonably prudent persons are accustomed to rely for the conduct of their serious affairs, and may be based on hearsay or other types of evidence which may or would be inadmissible in a jury trial.
[**ARC 9057B**, IAB 9/8/10, effective 10/13/10]

641—33.26(17A) Default.

33.26(1) If a party fails to appear or participate in a contested case proceeding after proper service of notice, the presiding officer may, if no adjournment is granted, enter a default decision or proceed with the hearing and render a decision in the absence of the party.

33.26(2) Where appropriate and not contrary to law, any party may move for default against a party who has failed to appear after proper service.

33.26(3) Default decisions or decisions rendered on the merits after a party has failed to appear or participate in a contested case proceeding become final board action unless, within 15 days after the date of notification or mailing of the decision, a motion to vacate is filed and served on all parties or an appeal of a decision on the merits is timely initiated within the time provided by subrule 33.30(2). A motion to vacate must state all facts relied upon by the moving party which establish that good cause existed for that party's failure to appear or participate at the contested case proceeding. Each fact so stated must be substantiated by at least one sworn affidavit of a person with personal knowledge of each such fact, which affidavit(s) must be attached to the motion.

33.26(4) The time for further appeal of a decision for which a timely motion to vacate has been filed is stayed pending a decision on the motion to vacate.

33.26(5) Properly substantiated and timely filed motions to vacate shall be granted only for good cause shown. The burden of proof as to good cause is on the moving party. Adverse parties shall have

ten days to respond to a motion to vacate. Adverse parties shall be allowed to conduct discovery as to the issue of good cause and to present evidence on the issue prior to a decision on the motion, if a request to do so is included in that party's response.

33.26(6) "Good cause" for purposes of this rule shall have the same meaning as "good cause" for setting aside a default judgment under the Iowa Rules of Civil Procedure.

33.26(7) A decision denying a motion to vacate is subject to further appeal within the time limit allowed for further appeal of a decision on the merits in the contested case proceeding. A decision granting a motion to vacate is subject to interlocutory appeal by the adverse party pursuant to rule 641—33.29(17A).

33.26(8) If a motion to vacate is granted and no interlocutory appeal has been taken, the presiding officer shall issue another statement of charges and the contested case shall proceed accordingly.

33.26(9) A default decision may provide either that the default is to be stayed pending a timely motion to vacate or that the default decision is to take effect immediately, subject to a request for stay under rule 641—33.33(17A).

[**ARC 9057B**, IAB 9/8/10, effective 10/13/10]

641—33.27(17A) Ex parte communication.

33.27(1) Prohibited communications. Unless requested for the disposition of ex parte matters specifically authorized by statute, following issuance of the statement of charges, there shall be no communication, directly or indirectly, between the presiding officer and any party or representative of any party or any other person with a direct or indirect interest in such case in connection with any issue of fact or law in the case except upon notice and opportunity for all parties to participate. Nothing in this provision is intended to preclude board members from communicating with other board members or members of the board staff, other than those with a personal interest in, or those engaged in personally investigating as defined in subrule 33.11(2), prosecuting, or advocating in, either the case under consideration or a pending factually related case involving the same parties, as long as those persons do not directly or indirectly communicate to the presiding officer any ex parte communications they have received of a type that the presiding officer would be prohibited from receiving or that furnish, augment, diminish, or modify the evidence in the record.

33.27(2) Prohibitions on ex parte communications commence with the issuance of the statement of charges in a contested case and continue for as long as the case is pending before the board.

33.27(3) Written, oral, or other forms of communication are "ex parte" if made without notice and opportunity for all parties to participate.

33.27(4) To avoid prohibited ex parte communications, notice must be given in a manner reasonably calculated to give all parties a fair opportunity to participate. Notice of written communications shall be provided in compliance with rule 641—33.14(17A) and may be supplemented by telephone, facsimile, electronic mail, or other means of notification. When permitted, oral communications may be initiated through conference telephone call including all parties or their representatives.

33.27(5) Persons who jointly act as a presiding officer in a pending contested case may communicate with each other without notice or opportunity for parties to participate.

33.27(6) The executive officer or other persons may be present during deliberations as long as the executive officer or other person is not disqualified from participating pursuant to rule 641—33.11(17A).

33.27(7) Communications with the presiding officer involving uncontested scheduling or procedural matters do not require notice or opportunity for parties to participate. Parties should notify other parties prior to initiating such contact with the presiding officer when feasible, and shall notify other parties when seeking to continue hearings or other deadlines pursuant to rule 641—33.22(17A).

33.27(8) Disclosure of prohibited communications. A presiding officer who receives a prohibited ex parte communication during the contested case process must initially determine if the effect of the communication is so prejudicial that the presiding officer should be disqualified.

a. If the presiding officer determines that disqualification is warranted, a copy of any prohibited written communication, all written responses to the communication, a written summary stating the substance of any prohibited oral or other communication not available in written form for disclosure, all

responses made, and the identity of each person from whom the presiding officer received a prohibited ex parte communication shall be submitted for inclusion in the record under seal by protective order.

b. If the presiding officer determines that disqualification is not warranted, such documents shall be submitted for inclusion in the record and served on all parties. Any party desiring to rebut the prohibited communication must be allowed the opportunity to do so upon written request filed within ten days after notice of the communication.

33.27(9) Promptly after being assigned to serve as presiding officer at any stage in a contested case proceeding, a presiding officer shall disclose to all parties material factual information received through ex parte communication prior to such assignment, unless the factual information has already been or shortly will be disclosed pursuant to Iowa Code section 17A.13(2) or through discovery. Factual information contained in an investigative report or similar document need not be separately disclosed by the presiding officer as long as such documents have been or will shortly be provided to the parties.

33.27(10) The presiding officer may render a proposed or final decision imposing appropriate sanctions for violations of this rule including default, a decision against the offending party, censure, or suspension or revocation of the privilege to practice before the board. Violation of ex parte communications prohibitions by board personnel shall be reported to the board and the board's executive officer for possible sanctions, including censure, suspension, dismissal, or other disciplinary action.
[**ARC 9057B**, IAB 9/8/10, effective 10/13/10]

641—33.28(17A) Recording costs. Upon request, the board shall provide a copy of the whole or any portion of the record at cost. The cost of preparing a copy of the record or of transcribing the hearing record shall be paid by the requesting party.
[**ARC 9057B**, IAB 9/8/10, effective 10/13/10]

641—33.29(17A) Interlocutory appeals. Upon written request of a party or on its own motion, the board may review an interlocutory order of the executive officer, administrative law judge, or hearing panel. Any request for interlocutory review must be filed within 14 days of issuance of the challenged order, but no later than the time for compliance with the order or the date of the hearing, whichever is first. In determining whether to do so, the board shall consider:

1. The extent to which its granting the interlocutory appeal would expedite final resolution of the case; and

2. The extent to which review of that interlocutory order by the board at the time it reviews the proposed decision of the presiding officer would provide an adequate remedy.
[**ARC 9057B**, IAB 9/8/10, effective 10/13/10]

641—33.30(17A,272C) Decisions.

33.30(1) *Final decisions.* When a quorum of the board presides over the reception of the evidence at the hearing, its decision is a final decision. A majority of the members shall constitute a quorum. Final decisions shall be served on the parties in accordance with subrule 33.14(2). Final decisions of the board, including consent agreements and consent orders, are public documents, are available to the public, and may be disseminated by the board and others as provided in Iowa Code chapter 22.

33.30(2) *Proposed panel decisions.*

a. Panel of specialists. When a panel of three specialists presides over the hearing, the panel shall issue a proposed decision which shall include findings of fact but shall not include conclusions of law or any recommendation for or against the licensee discipline. A proposed decision of a panel of specialists, together with a transcript of the proceedings and the exhibits presented, shall be reviewed by the board within 30 days of the date the proposed decision was issued.

b. Panel of board members. When a panel of three or more board members presides over the hearing, the panel shall issue a proposed decision which shall include proposed findings of fact, conclusions of law, and the order. A proposed panel decision shall be reviewed by the board within 30 days of the date the proposed panel decision was issued. A proposed panel decision becomes a final decision without further proceedings unless appealed in accordance with paragraph 33.30(2)*"c."*

c. Appeal of proposed panel decisions. A proposed panel decision pursuant to paragraph 33.30(2)*"a"* or paragraph 33.30(2)*"b"* may be appealed to the full board by either party by serving on the executive officer, either in person or by certified mail, a notice of appeal within 30 days after service of the proposed decision on the appealing party. The notice of appeal shall specify the party initiating the appeal, the proposed decision or order appealed from, the specific findings or conclusions to which exception is taken and any other exceptions to the decision or order, the relief sought, and the grounds for relief.

(1) Following receipt of a notice of appeal, the board shall enter an order establishing a schedule for submission of briefs and oral argument. The parties shall serve their briefs on the board and shall furnish an additional copy to each party by first-class mail. Briefs shall cite any applicable legal authority and specify relevant portions of the record in that proceeding.

(2) Oral argument shall be heard by the board unless waived by both parties. The time granted each party for oral argument shall be established by the board.

(3) The record on appeal shall be the entire record made before the hearing panel or administrative law judge.

d. Confidentiality. At no time prior to the release of the final decision by the board shall a proposed decision be made public or distributed to any person other than the parties.

e. Requests to present additional evidence. A party may request the taking of additional evidence after the issuance of a proposed decision only by establishing that:

(1) The evidence is material; and

(2) The evidence arose after the completion of the original hearing; or

(3) Good cause exists for failure to present the evidence at the original hearing; and

(4) The party has not waived the right to present additional evidence.

A written request to present additional evidence must be filed with the notice of appeal or by a nonappealing party within 14 days of service of the notice of appeal. The board may remand a case to the hearing panel for further hearing or may itself preside at the taking of additional evidence.

[**ARC 9057B**, IAB 9/8/10, effective 10/13/10]

641—33.31(17A,272C) Client notification. Within 15 days (or such other time period specifically ordered by the board) of the licensee's receipt of the board's final decision, whether entered by consent or following hearing, which suspends or revokes a license or accepts a voluntary surrender of a license to resolve a disciplinary case, the licensee shall notify in writing all current clients of the fact that the license has been suspended, revoked or voluntarily surrendered. Such notice shall advise clients to obtain alternative professional services. Within 30 days of receipt of the board's final order, the licensee shall file with the board copies of the notices sent. Compliance with this requirement shall be a condition for an application for reinstatement.

[**ARC 9057B**, IAB 9/8/10, effective 10/13/10]

641—33.32(17A,272C) Application for rehearing.

33.32(1) *Who may file.* Any party to a contested case proceeding may file an application for rehearing from a final order.

33.32(2) *Content of application.* The application for rehearing shall state on whose behalf it is filed, the specific grounds for rehearing, and the relief sought. In addition, the application shall state whether the applicant desires reconsideration of all or part of the board decision on the existing record and whether, on the basis of grounds enumerated in paragraph 33.30(2)*"e"* and rule 641—33.31(17A,272C), the applicant requests an opportunity to submit additional evidence.

33.32(3) *Filing deadline.* The application shall be filed with the board within 20 days after issuance of the final decision.

33.32(4) *Notice to other parties.* A copy of the application shall be timely mailed by the applicant to all parties of record not joining therein.

33.32(5) *Additional evidence.* A request that additional evidence be considered on rehearing shall be governed by paragraph 33.30(2)*"e."*

33.32(6) *Disposition.* Any application for rehearing shall be deemed denied unless the board grants the application within 20 days after its filing.

33.32(7) *Only remedy.* Application for rehearing is the only procedure by which a party may request that the board reconsider a final board decision.

33.32(8) *Proceedings.* If the board grants an application for rehearing, the board may set the application for oral argument or for hearing if additional evidence will be received. If additional evidence will not be received, the board may issue a ruling without oral argument or hearing. The board may, on the request of a party or on its own motion, order or permit the parties to provide written argument on one or more designated issues. The board may be assisted by an administrative law judge in all proceedings related to an application for rehearing.
[**ARC 9057B**, IAB 9/8/10, effective 10/13/10]

641—33.33(17A) Stays of board actions.

33.33(1) *When available.*

a. Any party to a contested case proceeding may petition the board for a stay of an order issued in that proceeding or for other temporary remedies, pending review by the board. The petition shall be filed with the notice of appeal and shall state the reasons justifying a stay or other temporary remedy. The board may rule on the stay or authorize the administrative law judge to do so.

b. Any party to a contested case proceeding may petition the board for a stay or other temporary remedies, pending judicial review of all or part of that proceeding. The petition shall state the reasons justifying a stay or other temporary remedy.

33.33(2) *When granted.* In determining whether to grant a stay, the presiding officer or board shall consider the factors listed in Iowa Code section 17A.19(5)*"c."*

33.33(3) *Vacation.* A stay may be vacated by the issuing authority upon application of the board or any other party.
[**ARC 9057B**, IAB 9/8/10, effective 10/13/10]

641—33.34(17A) No factual dispute contested cases. If the parties agree that no dispute of material fact exists as to a matter that would be a contested case if such a dispute of fact existed, the parties may present all relevant admissible evidence either by stipulation or otherwise as agreed by the parties, without necessity for the production of evidence at an evidentiary hearing. If such agreement is reached, a jointly submitted schedule detailing the method and timetable for submission of the record, briefs and oral argument should be submitted to the presiding officer for approval as soon as practicable. If the parties cannot agree, any party may file and serve a motion for summary judgment pursuant to the rules governing such motions.
[**ARC 9057B**, IAB 9/8/10, effective 10/13/10]

641—33.35(17A) Emergency adjudicative proceedings.

33.35(1) *Emergency action.* To the extent necessary to prevent or avoid immediate danger to the public health, safety, or welfare, and consistent with the Constitution and other provisions of law, the board may issue a written order in compliance with Iowa Code section 17A.18A to suspend a license in whole or in part, order the cessation of any continuing activity, order affirmative action, or take other action within the jurisdiction of the board by emergency adjudicative order. Before issuing an emergency adjudicative order, the board shall consider factors including, but not limited to, the following:

a. Whether there has been a sufficient factual investigation to ensure that the board is proceeding on the basis of reliable information;

b. Whether the specific circumstances which pose immediate danger to the public health, safety, or welfare have been identified and determined to be continuing;

c. Whether the person required to comply with the emergency adjudicative order may continue to engage in other activities without posing immediate danger to the public health, safety, or welfare;

d. Whether imposition of monitoring requirements or other interim safeguards would be sufficient to protect the public health, safety, or welfare; and

e. Whether the specific action contemplated by the board is necessary to avoid the immediate danger.

33.35(2) *Issuance of order.*

a. An emergency adjudicative order shall contain findings of fact, conclusions of law, and policy reasons to justify the determination of an immediate danger and the board's decision to take immediate action. The order is an open record.

b. The written emergency adjudicative order shall be immediately delivered to the person who is required to comply with the order, by utilizing one or more of the following procedures:

(1) Personal delivery.

(2) Certified mail, return receipt requested, to the last address on file with the board.

(3) Certified mail to the last address on file with the board.

(4) Facsimile, which may be used as the sole method of delivery if the person required to comply with the order has filed a written request that board orders be sent by facsimile and has provided a facsimile number for that purpose.

c. To the degree practicable, the board shall select the procedure for providing written notice that best ensures prompt, reliable delivery.

33.35(3) *Oral notice.* Unless the written emergency adjudicative order is provided by personal delivery on the same day that the order is issued, the board shall make reasonable immediate efforts to contact by telephone the person who is required to comply with the order.

33.35(4) *Completion of proceedings.* After the issuance of an emergency adjudicative order, the board shall proceed as quickly as feasible to complete any proceedings that would be required if the matter did not involve an immediate danger.

a. Issuance of a written emergency adjudicative order shall include notification of the date on which board proceedings are scheduled for hearing.

b. After issuance of an emergency adjudicative order, continuance of further board proceedings to a later date will be granted only in compelling circumstances upon written application unless the person required to comply with the order is the party requesting the continuance.

[**ARC 9057B**, IAB 9/8/10, effective 10/13/10]

641—33.36(17A,105,272C) License denial. If the board denies an application for a license, the board or its staff shall send written notice to the applicant by regular first-class mail identifying the factual and legal basis for denying the application. If the board denies an application to renew an existing license, the provisions of rule 641—33.37(17A,105,272C) shall apply.

33.36(1) An applicant who is aggrieved by the denial of an application for licensure and who desires to contest the denial must request a hearing before the board within 30 calendar days of the date the notice of denial is mailed. A request for hearing must be in writing and is deemed made on the date of the United States Postal Service nonmetered postmark or the date of personal service to the board office. The request for hearing shall specify the factual or legal errors that the applicant contends were made by the board, must identify any factual disputes upon which the applicant desires an evidentiary hearing, and may provide additional written information or documents in support of licensure. If a request for hearing is timely made, the board shall promptly issue a notice of hearing on the grounds asserted by the applicant.

33.36(2) Subject to subrule 33.10(1), the board may act as presiding officer at the contested case hearing, may hold the hearing before a panel of three board members, or may request that an administrative law judge act as the presiding officer and render a proposed decision. A proposed decision by a panel of board members or an administrative law judge is subject to appeal or review by the board pursuant to subrule 33.30(2).

33.36(3) License denial hearings are contested cases open to the public. Evidence supporting the denial of the license may be presented by an assistant attorney general. While each party shall have the burden of establishing the affirmative of matters asserted, the applicant shall have the ultimate burden of persuasion as to the applicant's qualification for licensure.

33.36(4) The presiding officer, after a hearing on the license denial, may grant or deny the application for licensure. If denied, the presiding officer shall state the reasons for denial of the license and may state conditions under which the application for licensure might be granted, if applicable.

33.36(5) The notice of license denial, request for hearing, notice of hearing, record at hearing, and order are open records and available for inspection and copying in accordance with Iowa Code chapter 22. Copies may be provided to the media, collateral organizations, and other persons or entities.

33.36(6) Judicial review of a final order of the board denying licensure may be sought in accordance with the provisions of Iowa Code section 17A.19 which are applicable to judicial review of any agency's final decision in a contested case.

[**ARC 9057B**, IAB 9/8/10, effective 10/13/10]

641—33.37(17A,105,272C) Denial of application to renew license. If the board denies a timely and sufficient application to renew a license, a notice of hearing shall be issued to commence a contested case proceeding.

33.37(1) Hearings on denial of an application to renew a license shall be conducted according to the procedural rules applicable to contested cases. Evidence supporting the denial of the license may be presented by an assistant attorney general. The provisions of subrules 33.36(2) and 33.36(4) to 33.36(6) shall generally apply, although license denial hearings which are in the nature of disciplinary actions will be subject to all laws and rules applicable to such hearings.

33.37(2) Pursuant to Iowa Code section 17A.18(2), an existing license shall not terminate or expire if the licensee has made timely and sufficient application for renewal until the last day for seeking judicial review of the board's final order denying the application, or a later date fixed by order of the board or the reviewing court.

33.37(3) Within the meaning of Iowa Code section 17A.18(2), a timely and sufficient renewal application shall be:

a. Received by the board in paper or electronic form, or postmarked with a nonmetered United States Postal Service postmark on or before the date the license is set to expire or lapse;

b. Signed by the licensee if the application is submitted in paper form or certified as accurate if submitted electronically;

c. Fully completed; and

d. Accompanied with the required fee. The fee shall be deemed unacceptable if, for instance, the amount is incorrect, the fee was not included with the application, the credit card number provided by the applicant is incorrect, the date of expiration of a credit card is omitted or incorrect, the attempted credit card transaction is rejected, or the applicant's check is returned for insufficient funds.

33.37(4) The administrative processing of an application to renew an existing license shall not prevent the board from subsequently commencing a contested case to challenge the licensee's qualifications for continued licensure if grounds exist to do so.

[**ARC 9057B**, IAB 9/8/10, effective 10/13/10]

641—33.38(105,272C) Recovery of hearing fees and expenses. The board may assess the licensee certain fees and expenses relating to a disciplinary hearing only if the board finds that the licensee has violated a statute or rule enforced by the board. Payment shall be made directly to the Plumbing and Mechanical Systems Board.

33.38(1) The board may assess the following costs under this rule:

a. For conducting a disciplinary hearing, an amount not to exceed $75.

b. All applicable costs involved in the transcript of the hearing or other proceedings in the contested case including, but not limited to, the services of the court reporter at the hearing, transcription, duplication, and postage or delivery costs. In the event of an appeal to the full board from a proposed decision, the appealing party shall timely request and pay for the transcript necessary for use in the board appeal process. The board may assess the transcript cost against the licensee pursuant to Iowa Code section 272C.6(6) or against the requesting party pursuant to Iowa Code section 17A.12(7), as the board deems equitable under the circumstances.

c. All normally accepted witness expenses and fees for a hearing or the taking of depositions, as incurred by the state of Iowa. These costs shall include, but not be limited to, the cost of an expert witness and the cost involved in telephone testimony. The costs for lay witnesses shall be guided by Iowa Code section 622.69. The cost for expert witnesses shall be guided by Iowa Code section 622.72. Mileage costs shall not be guided by Iowa Code section 625.2. The provisions of Iowa Code section 622.74 regarding advance payment of witness fees and the consequences of failure to make such payment are applicable with regard to any witness who is subpoenaed by either party to testify at hearing. Additionally, the board may assess travel and lodging expenses for witnesses at a rate not to exceed the rate applicable to state employees on the date the expense is incurred.

d. All normally applicable costs incurred by the state of Iowa involved in depositions including, but not limited to, the service of the court reporter who records the deposition, transcription, duplication, and postage or delivery costs. When a deposition of an expert witness is taken, the deposition cost shall include a reasonable expert witness fee. The expert witness fee shall not exceed the expert's customary hourly or daily rate, and shall include the time spent in travel to and from the deposition but exclude time spent in preparation for the deposition.

33.38(2) When imposed at the board's discretion, hearing fees (not exceeding $75) shall be assessed in the final disciplinary order. Costs and expenses assessed pursuant to this rule shall be calculated and, when possible, entered into the final disciplinary order specifying the amount to be reimbursed and the time period in which the amount assessed must be paid by the licensee.

a. When it is impractical or not possible to include in the disciplinary order the exact amount of the assessment and time period in which to pay in a timely manner, or if the expenditures occur after the disciplinary order is issued, the board, by majority vote of the members present, may assess through separate order the amount to be reimbursed and the time period in which payment is to be made by the licensee.

b. If the assessment and the time period are not included in the disciplinary order, the board shall have until the end of the sixth month after the date the state of Iowa paid the expenditures to assess the licensee for such expenditures. In order for the board to rely on this provision, however, the final disciplinary order must notify the licensee that fees and expenses will be assessed once known.

33.38(3) Any party may object to the fees, costs, or expenses assessed by the board by filing a written objection within 20 days of the issuance of the final disciplinary decision, or within 10 days of any subsequent order establishing the amount of the assessment. A party's failure to timely object shall be deemed a failure to exhaust administrative remedies. Orders which impose fees, costs, or expenses shall notify the licensee of the time frame in which objections must be filed in order to exhaust administrative remedies.

33.38(4) Fees, costs, and expenses assessed by the board pursuant to this rule shall be allocated to the expenditure category in which the disciplinary procedure or hearing was incurred. The fees, costs, and expenses shall be considered repayment of receipts as defined in Iowa Code section 8.2.

33.38(5) The failure to comply with payment of the assessed costs, fees, and expenses within the time specified by the board shall constitute a violation of an order of the board, shall be grounds for discipline, and shall be considered prima facie evidence of a violation of Iowa Code section 272C.3(2)(a). However, no action may be taken against the licensee without the opportunity for hearing as provided in this chapter.

[**ARC 9057B**, IAB 9/8/10, effective 10/13/10]

641—33.39(17A) Judicial review. Judicial review of the board's decision may be sought in accordance with the terms of Iowa Code chapter 17A.

33.39(1) Consistent with Iowa Code section 17A.19(3), if a party does not file a timely application for rehearing, a judicial review petition must be filed with the district court within 30 days after the issuance of the board's final decision. The board's final decision is deemed issued on the date it is mailed or the date of delivery if service is by other means, unless another date is specified in the order.

33.39(2) If a party files a timely application for rehearing, a judicial review petition must be filed with the district court within 30 days after the application for rehearing is denied or deemed denied. An application for rehearing is denied or deemed denied as provided in subrule 33.32(6).
[**ARC 9057B**, IAB 9/8/10, effective 10/13/10]

641—33.40(17A,272C) Reinstatement.

33.40(1) The term "reinstatement," as used in this rule, includes both the reinstatement of a suspended license and the issuance of a new license following the revocation or voluntary surrender of a license.

33.40(2) Any person whose license has been revoked or suspended by the board, or who voluntarily surrendered a license in a disciplinary proceeding, may apply to the board for reinstatement in accordance with the terms of the order of revocation or suspension, or order accepting the voluntary surrender.

33.40(3) Unless otherwise provided by law, if the order of revocation or suspension did not establish terms upon which reinstatement might occur, or if the license was voluntarily surrendered, an initial application for reinstatement may not be made until at least one year has elapsed from the date of the order or the date the board accepted the voluntary surrender of a license.

33.40(4) All proceedings for reinstatement shall be initiated by the respondent, who shall file with the board an application for reinstatement of the respondent's license. Such application shall be docketed in the original case in which the license was revoked, suspended, or relinquished. All proceedings upon the petition for reinstatement, including the matters preliminary and ancillary thereto, shall be subject to the same rules of procedure as other cases before the board.

33.40(5) An application for reinstatement shall allege facts which, if established, will be sufficient to enable the board to determine that the basis of revocation, suspension or voluntary surrender of the respondent's license no longer exists and that it will be in the public interest for the license to be reinstated. Compliance with rule 641—33.31(17A,272C) must also be established. The burden of proof to establish such facts shall be on the respondent.

33.40(6) An order of reinstatement shall be based upon a decision which incorporates findings of fact and conclusions of law and must be based upon the affirmative vote of not fewer than a majority of the board. This order shall be published as provided for in subrule 33.30(1).
[**ARC 9057B**, IAB 9/8/10, effective 10/13/10]

These rules are intended to implement Iowa Code chapters 17A, 105 and 272C.

[Filed ARC 9057B (Notice ARC 8861B, IAB 6/16/10), IAB 9/8/10, effective 10/13/10]
[Filed ARC 1223C (Notice ARC 0931C, IAB 8/7/13), IAB 12/11/13, effective 1/15/14]

CHAPTER 34
PLUMBING AND MECHANICAL SYSTEMS BOARD—COMPLAINTS AND INVESTIGATIONS

641—34.1(272C) Complaints.

34.1(1) A complaint shall be made in writing and shall be mailed or delivered to the Plumbing and Mechanical Systems Board, Lucas State Office Building, 321 E. 12th Street, Des Moines, Iowa 50319-0075. The complaint shall include the name and address of the complainant, the name of the licensee, and a concise statement of the allegations against the licensee. A complaint may also be initiated upon the board's own motion pursuant to evidence received by the board. Timely filing of complaints is required in order to ensure the availability of witnesses and to avoid initiation of an investigation under conditions which may have been significantly altered during the period of delay.

34.1(2) A person shall not be civilly liable as a result of filing a complaint with the board, or for disclosure to the board or its agents or employees, whether or not pursuant to a subpoena of records, documents, testimony or other forms of information which constitute privileged matter concerning a recipient of health care services or some other person, in connection with the duties of the board. However, such immunity from civil liability shall not apply if such act is done with malice.

[**ARC 8532B**, IAB 2/24/10, effective 1/26/10]

641—34.2(272C) Report of malpractice claims or actions or disciplinary actions. Each licensee shall submit a copy of any judgment or settlement in a malpractice claim or any disciplinary action taken by another licensing authority in another state or jurisdiction to the board within 30 days of the date of occurrence.

[**ARC 8532B**, IAB 2/24/10, effective 1/26/10]

641—34.3(272C) Report of acts or omissions. Each licensee with firsthand knowledge of acts or omissions in violation of statute or the board's administrative rules shall report to the board those acts or omissions when committed by another person licensed to practice by the board. The report shall include the name and address of the licensee and the date, time, and place of the incident.

[**ARC 8532B**, IAB 2/24/10, effective 1/26/10]

641—34.4(272C) Investigation of complaints or reports. The chairperson of the board may assign an investigation of a complaint or report to a member of the board or to an investigator. The investigating board member or the investigator may request information from any peer review committee which may be established to assist the board. The investigating board member or investigator may consult an assistant attorney general concerning the investigation or evidence produced from the investigation. A board member who has personally investigated a complaint is disqualified from participating in any contested case proceeding resulting from the investigation.

[**ARC 8532B**, IAB 2/24/10, effective 1/26/10]

641—34.5(17A,272C) Issuance of investigatory subpoenas.

34.5(1) The board executive officer or designee may, upon the written request of a board investigator or on the executive officer's own initiative, subpoena books, papers, records, and other real evidence which are necessary for the board to decide whether to initiate a contested case proceeding. In the case of a subpoena for mental health records, each of the following conditions shall be satisfied prior to the issuance of the subpoena:

a. The nature of the complaint reasonably justifies the issuance of a subpoena;

b. Adequate safeguards have been established to prevent unauthorized disclosure;

c. An express statutory mandate, articulated public policy, or other recognizable public interest favors access; and

d. An attempt was made to notify the patient and to secure an authorization from the patient for release of the records at issue.

34.5(2) A written request for a subpoena or the executive officer's written memorandum in support of the issuance of a subpoena shall contain the following:

a. The name and address of the person to whom the subpoena will be directed;

b. A specific description of the books, papers, records or other real evidence requested;

c. An explanation of why the documents sought to be subpoenaed are necessary for the board to determine whether it should initiate a contested case proceeding; and

d. In the case of a subpoena request for mental health records, confirmation that the conditions described in subrule 34.5(1) have been satisfied.

34.5(3) Each subpoena shall contain:

a. The name and address of the person to whom the subpoena is directed;

b. A description of the books, papers, records or other real evidence requested;

c. The date, time and location for production or inspection and copying;

d. The time within which a motion to quash or modify the subpoena must be filed;

e. The signature, address and telephone number of the board executive officer or designee;

f. The date of issuance;

g. A return of service.

34.5(4) Any person who is aggrieved or adversely affected by compliance with the subpoena and who desires to challenge the subpoena must, within 14 days after service of the subpoena, or before the time specified for compliance if such time is less than 14 days, file with the board a motion to quash or modify the subpoena. The motion shall describe the legal reasons why the subpoena should be quashed or modified and may be accompanied by legal briefs or factual affidavits.

34.5(5) Upon receipt of a timely motion to quash or modify a subpoena, the board may request an administrative law judge to issue a decision, or the board may issue a decision. Oral argument may be scheduled at the discretion of the board or the administrative law judge. The administrative law judge or the board may quash or modify the subpoena, deny the motion, or issue an appropriate protective order.

34.5(6) A person who is aggrieved by a ruling of an administrative law judge and who desires to challenge that ruling must appeal the ruling to the board by serving on the board executive officer, either in person or by certified mail, a notice of appeal within ten days after service of the decision of the administrative law judge.

34.5(7) If the person contesting the subpoena is not the person under investigation, the board's decision is final for purposes of judicial review. If the person contesting the subpoena is the person under investigation, the board's decision is not final for purposes of judicial review until either (1) the person is notified the investigation has been concluded with no formal action, or (2) there is a final decision in the contested case.

[**ARC 8532B**, IAB 2/24/10, effective 1/26/10]

641—34.6(272C) Peer review committees.

34.6(1) A complaint may be assigned to a peer review committee for review, investigation, or report to the board.

34.6(2) The board shall determine which peer review committee will review a case and what complaints or other matters shall be referred to a peer review committee for investigation, review, or report to the board.

34.6(3) Members of the peer review committees shall not be liable for acts, omissions, or decisions made in connection with service on the peer review committee. However, such immunity from civil liability shall not apply if such act is done with malice.

34.6(4) The peer review committees shall observe the requirements of confidentiality imposed by Iowa Code section 272C.6.

[**ARC 8532B**, IAB 2/24/10, effective 1/26/10]

641—34.7(17A) Appearance. The board may request that a licensee appear before a committee of the board to discuss a pending investigation. By electing to participate in the committee appearance, the licensee waives any objection to a board member both participating in the appearance and later participating as a decision maker in a contested case proceeding. By electing to participate in the

committee appearance, the licensee further waives any objection to the board executive officer assisting the board in the contested case proceeding.

[**ARC 8532B**, IAB 2/24/10, effective 1/26/10]

These rules are intended to implement Iowa Code chapters 17A, 105, and 272C.

[Filed Emergency After Notice ARC 8532B (Notice ARC 8364B, IAB 12/2/09), IAB 2/24/10, effective 1/26/10]

CHAPTER 35
PLUMBING AND MECHANICAL SYSTEMS BOARD—LICENSURE OF NONRESIDENT APPLICANT—RECIPROCITY

641—35.1(105) Definition. For purposes of this chapter, the following definition applies:

"Board" means the plumbing and mechanical systems board as established pursuant to Iowa Code section 105.3.

[**ARC 8533B**, IAB 2/24/10, effective 1/26/10]

641—35.2(105) Reciprocity agreements.

35.2(1) The board may enter into reciprocity agreements with other states that have plumbing, mechanical, HVAC-refrigeration, sheet metal, and hydronic licensing requirements similar to those set forth under Iowa law.

35.2(2) The board shall not enter into a reciprocity agreement with another state unless the other state grants the same reciprocity licensing privileges to residents of Iowa who have obtained Iowa plumbing, mechanical, HVAC-refrigeration, sheet metal, or hydronic licenses under Iowa Code chapter 105 as amended by 2013 Iowa Acts, Senate File 427.

[**ARC 8533B**, IAB 2/24/10, effective 1/26/10; **ARC 1224C**, IAB 12/11/13, effective 1/15/14]

641—35.3(105) Application by reciprocity. A nonresident of Iowa seeking a reciprocal license under Iowa Code chapter 105 shall apply on forms provided by the board.

35.3(1) *Registration requirements.* The board may issue a reciprocal license if:

a. The applicant is a nonresident of Iowa;

b. The applicant possesses a valid plumbing, mechanical, HVAC-refrigeration, sheet metal, or hydronic license issued from a state with which the board has entered into a reciprocity agreement;

c. The applicant has paid the appropriate fee or fees required in 641—Chapter 28;

d. The applicant meets the minimum qualifications for licensure in rule 641—29.4(105); and

e. The applicant agrees to comply with all provisions of Iowa law and rules.

35.3(2) *Denial of reciprocal license.* The board may refuse to issue a reciprocal license to an applicant otherwise qualified based upon a suspension, revocation, or other disciplinary action taken against the applicant by a licensing authority in this or another jurisdiction. For purposes of this subrule, a "disciplinary action" includes the voluntary surrender of a license to resolve a pending disciplinary investigation or proceeding.

[**ARC 8533B**, IAB 2/24/10, effective 1/26/10; **ARC 1224C**, IAB 12/11/13, effective 1/15/14]

These rules are intended to implement Iowa Code section 105.21 as amended by 2013 Iowa Acts, Senate File 427.

[Filed Emergency After Notice ARC 8533B (Notice ARC 8365B, IAB 12/2/09), IAB 2/24/10, effective 1/26/10]

[Filed ARC 1224C (Notice ARC 0930C, IAB 8/7/13), IAB 12/11/13, effective 1/15/14]

CHAPTER 36
PLUMBING AND MECHANICAL SYSTEMS BOARD— PETITIONS FOR RULE MAKING

641—36.1(17A) Petition for rule making. Any person or agency may file a petition for rule making with the Iowa Plumbing and Mechanical Systems Board, Lucas State Office Building, 321 E. 12th Street, Des Moines, Iowa 50319-0075. A petition is deemed filed when it is received by the board. The board must provide the petitioner with a file-stamped copy of the petition if the petitioner provides the board an extra copy for this purpose. The petition must be typewritten, or legibly hand-written in ink and must substantially conform to the following form:

THE IOWA PLUMBING AND MECHANICAL SYSTEMS BOARD

Petition by (Name of Petitioner) for the (adoption, amendment, or repeal) of rules relating to (state subject matter).	}	PETITION FOR RULE MAKING

The petition must provide the following information:

1. A statement of the specific rule-making action sought by the petitioner including the text or a summary of the contents of the proposed rule or amendments to a rule and, if it is a petition to amend or repeal a rule, a citation and the relevant language to the particular portion or portions of the rule proposed to be amended or repealed.
2. A citation to any law deemed relevant to the board's authority to take the action urged or to the desirability of that action.
3. A brief summary of petitioner's arguments in support of the action urged in the petition.
4. A brief summary of the data supporting the action urged in the petition.
5. The names and addresses of other persons, or a description of any class of persons, known by petitioner to be affected by or interested in, the proposed action which is the subject of the petition.
6. Any request by petitioner for a meeting provided for by rule 641—36.4(17A).

36.1(1) The petition must be dated and signed by the petitioner or the petitioner's representative. It must also include the name, mailing address, and telephone number of the petitioner and petitioner's representative, and a statement indicating the person to whom communications concerning the petition should be directed.

36.1(2) The board may deny a petition because it does not substantially conform to the required form.

[**ARC 0453C**, IAB 11/14/12, effective 12/19/12]

641—36.2(17A) Briefs. The petitioner may attach a brief to the petition in support of the action urged in the petition. The board may request a brief from the petitioner or from any other person concerning the substance of the petition.

[**ARC 0453C**, IAB 11/14/12, effective 12/19/12]

641—36.3(17A) Inquiries. Inquiries concerning the status of a petition for rule making may be made to Iowa Plumbing and Mechanical Systems Board, Lucas State Office Building, 321 E. 12th Street, Des Moines, Iowa 50319-0075.

[**ARC 0453C**, IAB 11/14/12, effective 12/19/12]

641—36.4(17A) Board consideration.

36.4(1) Within 14 days after the filing of a petition, the board must submit a copy of the petition and any accompanying brief to the administrative rules coordinator and to the administrative rules review committee. Upon request by petitioner in the petition, the board must schedule a brief and informal meeting between the petitioner and the board, a member of the board, or a member of the staff of the board, to discuss the petition. The board may request the petitioner to submit additional information or argument concerning the petition. The board may also solicit comments from any person on the

substance of the petition. Also, comments on the substance of the petition may be submitted to the board by any person.

36.4(2) Within 60 days after the filing of the petition, or within any longer period agreed to by the petitioner, the board must, in writing, deny the petition, and notify petitioner of its action and the specific grounds for the denial, or grant the petition and notify petitioner that it has instituted rule-making proceedings on the subject of the petition. Petitioner shall be deemed notified of the denial or grant of the petition on the date when the board mails or delivers the required notification to petitioner.

36.4(3) Denial of a petition because it does not substantially conform to the required form does not preclude the filing of a new petition on the same subject that seeks to eliminate the grounds for the board's rejection of the petition.

[**ARC 0453C**, IAB 11/14/12, effective 12/19/12]

These rules are intended to implement Iowa Code sections 17A.7 and 105.4.

[Filed Emergency After Notice ARC 8534B (Notice ARC 8366B, IAB 12/2/09), IAB 2/24/10, effective 1/26/10]

[Filed ARC 0453C (Notice ARC 0314C, IAB 9/5/12), IAB 11/14/12, effective 12/19/12]

CHAPTER 37
PHYSICAL PROTECTION OF CATEGORY 1 AND CATEGORY 2 QUANTITIES OF RADIOACTIVE MATERIAL

GENERAL PROVISIONS

641—37.1(136C) Purpose and scope.

37.1(1) This chapter has been established to provide the requirements for the physical protection program for any licensee that possesses an aggregated category 1 or category 2 quantity of radioactive material listed in Appendix A to this chapter. These requirements provide reasonable assurance of the security of category 1 or category 2 quantities of radioactive material by protecting these materials from theft or diversion. Specific requirements for access to material, use of material, transfer of material, and transport of material are included. No provision of this chapter authorizes possession of licensed material.

37.1(2) The divisions in this chapter entitled "Background Investigations and Access Control Program" and "Physical Protection Requirements During Use," including rules 641—37.21(136C) to 641—37.57(136C), apply to any person who, under the regulations in this chapter, possesses or uses at any site an aggregated category 1 or category 2 quantity of radioactive material.

37.1(3) The division in this chapter entitled "Physical Protection in Transit," including rules 641—37.71(136C) to 641—37.81(136C), applies to any person who, under the rules of this chapter:

a. Transports or delivers to a carrier for transport in a single shipment a category 1 or category 2 quantity of radioactive material; or

b. Imports or exports a category 1 or category 2 quantity of radioactive material; the provisions only apply to the domestic portion of the transport.

37.1(4) All references to any Code of Federal Regulations (CFR) in this chapter are those in effect as of July 16, 2014.

[**ARC 1479C**, IAB 6/11/14, effective 7/16/14]

641—37.2 to **37.4** Reserved.

641—37.5(136C) Definitions.

37.5(1) For the purposes of this chapter, these terms have the definitions set forth below.

"Access control" means a system for allowing only approved individuals to have unescorted access to the security zone and for ensuring that all other individuals are subject to escorted access.

"Act" means the Atomic Energy Act of 1954 (68 Stat. 919), as amended through July 16, 2014.

"Agency" means the Iowa department of public health.

"Aggregated" means accessible by the breach of a single physical barrier that would allow access to radioactive material in any form, including any devices that contain the radioactive material, when the total activity equals or exceeds a category 2 quantity of radioactive material.

"Agreement state" means any state with which the Atomic Energy Commission or the U.S. Nuclear Regulatory Commission has entered into an effective agreement under Subsection 274b. of the Act. "Non-agreement state" means any other state.

"Approved individual" means an individual whom the licensee has determined to be trustworthy and reliable for unescorted access in accordance with rules 641—37.21(136C) through 641—37.33(136C) and who has completed the training required by 37.43(3).

"Background investigation" means the investigation conducted by a licensee or applicant to support the determination of trustworthiness and reliability.

"Becquerel (Bq)" means one disintegration per second.

"Byproduct material" means:

1. Any radioactive material, except special nuclear material, yielded in, or made radioactive by, exposure to the radiation incident to the process of producing or using special nuclear material;

2. The tailings or wastes produced by the extraction or concentration of uranium or thorium from ore processed primarily for its source material content, including discrete surface wastes resulting from

uranium or thorium solution extraction processes. Underground ore bodies depleted by these solution extraction operations do not constitute "byproduct material" within this definition;

3. Any discrete source of radium-226 that is produced, extracted, or converted after extraction, before, on, or after August 8, 2005, for use for a commercial, medical, or research activity; or any material that:

- Has been made radioactive by use of a particle accelerator; and
- Is produced, extracted, or converted after extraction, before, on, or after August 8, 2005, for use for a commercial, medical, or research activity; and

4. Any discrete source of naturally occurring radioactive material, other than source material, that:

- The Nuclear Regulatory Commission, in consultation with the Administrator of the Environmental Protection Agency, the Secretary of Energy, the Secretary of Homeland Security, and the head of any other appropriate federal agency, determines would pose a threat similar to the threat posed by a discrete source of radium-226 to the public health and safety or the common defense and security; and
- Before, on, or after August 8, 2005, is extracted or converted after extraction for use in a commercial, medical, or research activity.

"Carrier" means a person engaged in the transportation of passengers or property by land or water as a common, contract, or private carrier, or by civil aircraft.

"Category 1 quantity of radioactive material" means a quantity of radioactive material meeting or exceeding the category 1 threshold in Table 1 of Appendix A to this chapter. This is determined by calculating the ratio of the total activity of each radionuclide to the category 1 threshold for that radionuclide and adding the ratios together. If the sum is equal to or exceeds 1, the quantity would be considered a category 1 quantity. Category 1 quantities of radioactive material do not include the radioactive material contained in any fuel assembly, subassembly, fuel rod, or fuel pellet.

"Category 2 quantity of radioactive material" means a quantity of radioactive material meeting or exceeding the category 2 threshold but less than the category 1 threshold in Table 1 of Appendix A to this chapter. This is determined by calculating the ratio of the total activity of each radionuclide to the category 2 threshold for that radionuclide and adding the ratios together. If the sum is equal to or exceeds 1, the quantity would be considered a category 2 quantity. Category 2 quantities of radioactive material do not include the radioactive material contained in any fuel assembly, subassembly, fuel rod, or fuel pellet.

"Commission" means the U.S. Nuclear Regulatory Commission or its duly authorized representatives.

"Curie" means that amount of radioactive material which disintegrates at the rate of 37 billion atoms per second.

"Diversion" means the unauthorized movement of radioactive material subject to this chapter to a location different from the material's authorized destination inside or outside of the site at which the material is used or stored.

"Escorted access" means accompaniment while in a security zone by an approved individual who maintains continuous direct visual surveillance at all times over an individual who is not approved for unescorted access.

"Fingerprint orders" means the orders issued by the U.S. Nuclear Regulatory Commission or the legally binding requirements issued by agreement states that require fingerprints and criminal history records checks for individuals with unescorted access to category 1 and category 2 quantities of radioactive material or safeguards information-modified handling.

"Government agency" means any executive department, commission, independent establishment, corporation, wholly or partly owned by the United States of America which is an instrumentality of the United States, or any board, bureau, division, service, office, officer, authority, administration, or other establishment in the executive branch of the government.

"License" means a license issued by the agency in accordance with the rules adopted by the agency.

"License-issuing authority" means the licensing agency that issued the license, i.e., the agency, the U.S. Nuclear Regulatory Commission or an agreement state.

"Local law enforcement agency (LLEA)" means a public or private organization that has been approved by a federal, state, or local government to carry firearms and make arrests, and is authorized and has the capability to provide an armed response in the jurisdiction where the licensed category 1 or category 2 quantity of radioactive material is used, stored, or transported.

"Lost or missing licensed material" means licensed material whose location is unknown. Lost or missing licensed material includes material that has been shipped but has not reached its destination and whose location cannot be readily traced in the transportation system.

"Mobile device" means a piece of equipment containing licensed radioactive material that is either mounted on wheels or casters, or otherwise equipped for moving without a need for disassembly or dismounting; or designed to be hand carried. Mobile devices do not include stationary equipment installed in a fixed location.

"Movement control center" means an operations center that is remote from transport activity and that maintains position information on the movement of radioactive material, receives reports of attempted attacks or thefts, provides a means for reporting these and other problems to appropriate agencies and can request and coordinate appropriate aid.

"No-later-than arrival time" means the date and time that the shipping licensee and receiving licensee have established as the time at which an investigation will be initiated if the shipment has not arrived at the receiving facility. The no-later-than arrival time may not be more than six hours after the estimated arrival time for shipments of category 2 quantities of radioactive material.

"Person" means any individual, corporation, partnership, firm, association, trust, estate, public or private institution, group, agency, political subdivision of this state, any other state or political subdivision or agency thereof, and any legal successor, representative, agent, or agency of the foregoing, but shall not include federal government agencies.

"Reviewing official" means the individual who shall make the trustworthiness and reliability determination of an individual to determine whether the individual may have, or continue to have, unescorted access to the category 1 or category 2 quantities of radioactive materials that are possessed by the licensee.

"Sabotage" means deliberate damage, with malevolent intent, to a category 1 or category 2 quantity of radioactive material, a device that contains a category 1 or category 2 quantity of radioactive material, or the components of the security system.

"Safe haven" means a readily recognizable and readily accessible site at which security is present or from which, in the event of an emergency, the transport crew can notify and wait for the local law enforcement authorities.

"Security zone" means any temporary or permanent area determined and established by the licensee for the physical protection of category 1 or category 2 quantities of radioactive material.

"State" means a state of the United States, the District of Columbia, the Commonwealth of Puerto Rico, the Virgin Islands, Guam, American Samoa, and the Commonwealth of the Northern Mariana Islands.

"Telemetric position monitoring system" means a data transfer system that captures information by instrumentation or measuring devices, or both, about the location and status of a transport vehicle or package between the departure and destination locations.

"Trustworthiness and reliability" are characteristics of an individual considered dependable in judgment, character, and performance, such that unescorted access to category 1 or category 2 quantities of radioactive material by that individual does not constitute an unreasonable risk to the public health and safety or security. A determination of trustworthiness and reliability for this purpose is based upon the results from a background investigation.

"Unescorted access" means solitary access to an aggregated category 1 or category 2 quantity of radioactive material or the devices that contain the material.

"United States," when used in a geographical sense, includes Puerto Rico and all territories and possessions of the United States.

[**ARC 1479C**, IAB 6/11/14, effective 7/16/14]

641—37.6 Reserved.

641—37.7(136C) Communications. All communications and reports concerning the rules in this chapter should be addressed to the agency at its office located at the Iowa Department of Public Health, Bureau of Radiological Health, Lucas State Office Building, 5th Floor, 321 East 12th Street, Des Moines, Iowa 50319.
[**ARC 1479C**, IAB 6/11/14, effective 7/16/14]

641—37.8 to **37.10** Reserved.

641—37.11(136C) Specific exemptions.

37.11(1) The agency may, upon application of any interested person or upon its own initiative, grant such exemptions from the requirements of the rules in this chapter as it determines are authorized by law and will not result in undue hazard to public health and safety or property and are otherwise in the public interest. Application for exemption should be made in accordance with 641—Chapter 178.

37.11(2) A licensee that possesses radioactive waste that contains category 1 or category 2 quantities of radioactive material is exempt from the requirements of this chapter. Except that any radioactive waste that contains discrete sources, ion-exchange resins, or activated material that weighs less than 2,000 kg (4,409 lbs) is not exempt from the requirements of this chapter. The licensee shall implement the following requirements to secure the radioactive waste:

a. Use continuous physical barriers that allow access to the radioactive waste only through established access control points;

b. Use a locked door or gate with monitored alarm at the access control point;

c. Assess and respond to each actual or attempted unauthorized access to determine whether an actual or attempted theft, sabotage, or diversion occurred; and

d. Immediately notify the LLEA and request an armed response from the LLEA upon determination that there was an actual or attempted theft, sabotage, or diversion of the radioactive waste that contains category 1 or category 2 quantities of radioactive material.
[**ARC 1479C**, IAB 6/11/14, effective 7/16/14]

641—37.12 to **37.20** Reserved.

BACKGROUND INVESTIGATIONS AND ACCESS CONTROL PROGRAM

641—37.21(136C) Personnel access authorization requirements for category 1 or category 2 quantities of radioactive material.

37.21(1) Each licensee that possesses an aggregated quantity of radioactive material at or above the category 2 threshold shall establish, implement, and maintain its access authorization program in accordance with the requirements of this chapter.

37.21(2) An applicant for a new license and each licensee that would become newly subject to the requirements of this chapter upon application for amendment of its license, and a licensee aggregating radioactive material to a quantity that equals or exceeds the category 2 threshold, shall implement the requirements of this chapter and be inspected by the agency, as appropriate, before a new license or license amendment will be issued.

37.21(3) The licensee's access authorization program must ensure that the individuals specified in 37.21(4) are trustworthy and reliable.

37.21(4) Applicability.

a. Licensees shall subject the following individuals to an access authorization program:

(1) Any individual whose assigned duties require unescorted access to category 1 or category 2 quantities of radioactive material or to any device that contains the radioactive material; and

(2) Reviewing officials.

b. Licensees need not subject the categories of individuals listed in rule 641—37.29(136C) to the investigation elements of the access authorization program.

c. Licensees shall approve for unescorted access to category 1 or category 2 quantities of radioactive material only those individuals with job duties that require unescorted access to category 1 or category 2 quantities of radioactive material.

d. Licensees may include individuals needing access to safeguards information-modified handling under 10 CFR Part 73 in the access authorization program under these rules.

[**ARC 1479C**, IAB 6/11/14, effective 7/16/14]

641—37.22 Reserved.

641—37.23(136C) Access authorization program requirements.

37.23(1) *Granting unescorted access authorization.*

a. Licensees shall implement the requirements of these rules for granting initial or reinstated unescorted access authorization.

b. Individuals who have been determined to be trustworthy and reliable shall also complete the security training required by 37.43(3) before being allowed unescorted access to category 1 or category 2 quantities of radioactive material.

37.23(2) *Reviewing officials.*

a. Reviewing officials are the only individuals who may make trustworthiness and reliability determinations that allow individuals to have unescorted access to category 1 or category 2 quantities of radioactive materials possessed by the licensee.

b. Each licensee shall name one or more individuals to be reviewing officials. After completing the background investigation on the reviewing official, the licensee shall provide under oath or affirmation, a certification that the reviewing official is deemed trustworthy and reliable by the licensee. The fingerprints of the named reviewing official must be taken by a law enforcement agency, federal or state agencies that provide fingerprinting services to the public, or commercial fingerprinting services authorized by a state to take fingerprints. Every ten years, the licensee shall recertify that the reviewing official is deemed trustworthy and reliable in accordance with 37.25(3).

c. Reviewing officials must be permitted to have unescorted access to category 1 or category 2 quantities of radioactive materials or access to safeguards information or safeguards information-modified handling, if the licensee possesses safeguards information or safeguards information-modified handling.

d. Reviewing officials cannot approve other individuals to act as reviewing officials.

e. A reviewing official does not need to undergo a new background investigation before being named by the licensee as the reviewing official if:

(1) The individual has undergone a background investigation that included fingerprinting and an FBI criminal history records check and has been determined to be trustworthy and reliable by the licensee; or

(2) The individual is subject to a category listed in rule 641—37.29(136C).

37.23(3) *Informed consent.*

a. Licensees may not initiate a background investigation without the informed and signed consent of the subject individual. This consent must include authorization to share personal information with other individuals or organizations as necessary to complete the background investigation. Before a final adverse determination, the licensee shall provide the individual with an opportunity to correct any inaccurate or incomplete information that is developed during the background investigation. Licensees do not need to obtain signed consent from those individuals that meet the requirements of 37.25(2). A signed consent must be obtained prior to any reinvestigation.

b. The subject individual may withdraw the individual's consent at any time. Licensees shall inform the individual that:

(1) If an individual withdraws consent, the licensee may not initiate any elements of the background investigation that were not in progress at the time the individual withdrew consent; and

(2) The withdrawal of consent for the background investigation is sufficient cause for denial or termination of unescorted access authorization.

37.23(4) *Personal history disclosure.* Any individual who is applying for unescorted access authorization shall disclose the personal history information that is required by the licensee's access authorization program for the reviewing official to make a determination of the individual's trustworthiness and reliability. Refusal to provide, or the falsification of, any personal history information required by these rules is sufficient cause for denial or termination of unescorted access authorization.

37.23(5) *Determination basis.*

a. The reviewing official shall determine whether to permit, deny, unfavorably terminate, maintain, or administratively withdraw an individual's unescorted access authorization based on an evaluation of all of the information collected to meet the requirements of these rules.

b. The reviewing official may not permit any individual to have unescorted access until the reviewing official has evaluated all of the information collected to meet the requirements of these rules and determined that the individual is trustworthy and reliable. The reviewing official may deny unescorted access to any individual based on information obtained at any time during the background investigation.

c. The licensee shall document the basis for concluding whether or not there is reasonable assurance that an individual is trustworthy and reliable.

d. The reviewing official may terminate or administratively withdraw an individual's unescorted access authorization based on information obtained after the background investigation has been completed and the individual granted unescorted access authorization.

e. Licensees shall maintain a list of persons currently approved for unescorted access authorization. When a licensee determines that a person no longer requires unescorted access or meets the access authorization requirement, the licensee shall remove the person from the approved list as soon as possible, but no later than seven working days, and take prompt measures to ensure that the individual is unable to have unescorted access to the material.

37.23(6) *Procedures.* Licensees shall develop, implement, and maintain written procedures for implementing the access authorization program. The procedures must include provisions for the notification of individuals who are denied unescorted access. The procedures must include provisions for the review, at the request of the affected individual, of a denial or termination of unescorted access authorization. The procedures must contain a provision to ensure that the individual is informed of the grounds for the denial or termination of unescorted access authorization and allow the individual an opportunity to provide additional relevant information.

37.23(7) *Right to correct and complete information.*

a. Prior to any final adverse determination, licensees shall provide each individual subject to these rules with the right to complete, correct, and explain information obtained as a result of the licensee's background investigation. Confirmation of receipt by the individual of this notification must be maintained by the licensee for a period of one year from the date of the notification.

b. If, after reviewing the individual's criminal history record, an individual believes that it is incorrect or incomplete in any respect and wishes to change, correct, update, or explain anything in the record, the individual may initiate challenge procedures. These procedures include direct application by the individual challenging the record to the law enforcement agency that contributed the questioned information or a direct challenge as to the accuracy or completeness of any entry on the criminal history record to the Federal Bureau of Investigation, Criminal Justice Information Services (CJIS) Division, ATTN: SCU, Mod. D-2, 1000 Custer Hollow Road, Clarksburg, WV 26306, as set forth in 28 CFR 16.30 through 16.34. In the latter case, the Federal Bureau of Investigation (FBI) will forward the challenge to the agency that submitted the data, and will request that the agency verify or correct the challenged entry. Upon receipt of an official communication directly from the agency that contributed the original information, the FBI Identification Division will make any changes necessary in accordance with the information supplied by that agency. Licensees must provide at least ten days for an individual to initiate action to challenge the results of an FBI criminal history records check after the record is made available for the individual's review. The licensee may make a final adverse determination based upon the criminal history records only after receipt of the FBI's confirmation or correction of the record.

37.23(8) *Records.*

a. The licensee shall retain documentation regarding the trustworthiness and reliability of individual employees for three years from the date the individual no longer requires unescorted access to category 1 or category 2 quantities of radioactive material.

b. The licensee shall retain a copy of the current access authorization program procedures as a record for three years after the procedure is no longer needed. If any portion of the procedure is superseded, the licensee shall retain the superseded material for three years after the record is superseded.

c. The licensee shall retain the list of persons approved for unescorted access authorization for three years after the list is superseded or replaced.

[**ARC 1479C**, IAB 6/11/14, effective 7/16/14]

641—37.24 Reserved.

641—37.25(136C) Background investigations.

37.25(1) *Initial investigation.* Before allowing an individual unescorted access to category 1 or category 2 quantities of radioactive material or to the devices that contain the material, licensees shall complete a background investigation of the individual seeking unescorted access authorization. The scope of the investigation must encompass at least the seven years preceding the date of the background investigation or since the individual's eighteenth birthday, whichever is shorter. The background investigation must include at a minimum:

a. Fingerprinting and an FBI identification and criminal history records check in accordance with rule 641—37.27(136C);

b. Verification of true identity. Licensees shall verify the true identity of the individual who is applying for unescorted access authorization to ensure that the applicant is who the applicant claims to be. A licensee shall review official identification documents (e.g., driver's license; passport; government identification; certificate of birth issued by the state, province, or country of birth) and compare the documents to personal information data provided by the individual to identify any discrepancy in the information. Licensees shall document the type, expiration, and identification number of the identification document, or maintain a photocopy of identifying documents on file in accordance with rule 641—37.31(136C). Licensees shall certify in writing that the identification was properly reviewed, and shall maintain the certification and all related documents for review upon inspection;

c. Employment history verification. Licensees shall complete employment history verification, including military history. Licensees shall verify the individual's employment with each previous employer for the most recent seven years before the date of application;

d. Verification of education. Licensees shall verify that the individual participated in the education process during the claimed period;

e. Character and reputation determination. Licensees shall complete reference checks to determine the character and reputation of the individual who has applied for unescorted access authorization. Unless other references are not available, reference checks may not be conducted with any person who is known to be a close member of the individual's family, including but not limited to the individual's spouse, parents, siblings, or children, or any individual who resides in the individual's permanent household. Reference checks under this rule must be limited to whether the individual has been and continues to be trustworthy and reliable;

f. The licensee shall also, to the extent possible, obtain independent information to corroborate that provided by the individual (e.g., seek references not supplied by the individual); and

g. If a previous employer, educational institution, or any other entity with which the individual claims to have been engaged fails to provide information or indicates an inability or unwillingness to provide information within a time frame deemed appropriate by the licensee but at least after ten business days of the request or if the licensee is unable to reach the entity, the licensee shall document the refusal, unwillingness, or inability in the record of investigation and shall attempt to obtain the information from an alternate source.

37.25(2) *Grandfathering.*

a. Individuals who have been determined to be trustworthy and reliable for unescorted access to category 1 or category 2 quantities of radioactive material under the fingerprint orders may continue to have unescorted access to category 1 and category 2 quantities of radioactive material without further investigation. These individuals shall be subject to the reinvestigation requirement.

b. Individuals who have been determined to be trustworthy and reliable under the provisions of 10 CFR Part 73 or the security orders for access to safeguards information, safeguards information-modified handling, or risk-significant material may have unescorted access to category 1 and category 2 quantities of radioactive material without further investigation. The licensee shall document that the individual was determined to be trustworthy and reliable under the provisions of 10 CFR Part 73 or a security order. Security order, in this context, refers to any order that was issued by the NRC that required fingerprints and an FBI criminal history records check for access to safeguards information, safeguards information-modified handling, or risk-significant material such as special nuclear material or large quantities of uranium hexafluoride. These individuals shall be subject to the reinvestigation requirement.

37.25(3) *Reinvestigations.* Licensees shall conduct a reinvestigation every ten years for any individual with unescorted access to category 1 or category 2 quantities of radioactive material. The reinvestigation shall consist of fingerprinting and an FBI identification and criminal history records check in accordance with rule 641—37.27(136C). The reinvestigations must be completed within ten years of the date on which these elements were last completed.

[**ARC 1479C**, IAB 6/11/14, effective 7/16/14]

641—37.26 Reserved.

641—37.27(136C) Requirements for criminal history records checks of individuals granted unescorted access to category 1 or category 2 quantities of radioactive material.

37.27(1) *General performance objective and requirements.*

a. Except for those individuals listed in rule 641—37.29(136C) and those individuals grandfathered under 37.25(2), each licensee subject to the provisions of these rules shall fingerprint each individual who is to be permitted unescorted access to category 1 or category 2 quantities of radioactive material. Licensees shall transmit all collected fingerprints to the Nuclear Regulatory Commission for transmission to the FBI. The licensee shall use the information received from the FBI as part of the required background investigation to determine whether to grant or deny further unescorted access to category 1 or category 2 quantities of radioactive materials for that individual.

b. The licensee shall notify each affected individual that the individual's fingerprints will be used to secure a review of the individual's criminal history record, and shall inform the individual of the procedures for revising the record or adding explanations to the record.

c. Fingerprinting is not required if a licensee is reinstating an individual's unescorted access authorization to category 1 or category 2 quantities of radioactive materials if:

(1) The individual returns to the same facility that granted unescorted access authorization within 365 days of the termination of the individual's unescorted access authorization; and

(2) The previous access was terminated under favorable conditions.

d. Fingerprints do not need to be taken if an individual who is an employee of a licensee, contractor, manufacturer, or supplier has been granted unescorted access to category 1 or category 2 quantities of radioactive material, access to safeguards information, or safeguards information-modified handling by another licensee, based upon a background investigation conducted under these rules, the fingerprint orders, or 10 CFR Part 73. An existing criminal history records check file may be transferred to the licensee asked to grant unescorted access in accordance with the provisions of 37.31(3).

e. Licensees shall use the information obtained as part of a criminal history records check solely for the purpose of determining an individual's suitability for unescorted access authorization to category 1 or category 2 quantities of radioactive materials, access to safeguards information, or safeguards information-modified handling.

37.27(2) *Prohibitions.*

a. Licensees may not base a final determination to deny an individual unescorted access authorization to category 1 or category 2 quantities of radioactive material solely on the basis of information received from the FBI involving:

(1) An arrest more than one year old for which there is no information of the disposition of the case; or

(2) An arrest that resulted in dismissal of the charge or an acquittal.

b. Licensees may not use information received from a criminal history records check obtained under these rules in a manner that would infringe upon the rights of any individual under the First Amendment to the Constitution of the United States, nor shall licensees use the information in any way that would discriminate among individuals on the basis of race, religion, national origin, gender, or age.

37.27(3) *Procedures for processing of fingerprint checks.*

a. For the purpose of complying with these rules, licensees shall use an appropriate method listed in 10 CFR 37.7 to submit to the U.S. Nuclear Regulatory Commission, Director, Division of Facilities and Security, 11545 Rockville Pike, ATTN: Criminal History Program/Mail Stop TWB-05 B32M, Rockville, Maryland 20852, one completed, legible standard fingerprint card (Form FD-258, ORIMDNRCOOOZ), electronic fingerprint scan or, where practicable, other fingerprint record for each individual requiring unescorted access to category 1 or category 2 quantities of radioactive material. Copies of these forms may be obtained by writing the Office of Information Services, U.S. Nuclear Regulatory Commission, Washington, DC 20555-0001, by calling 1-630-829-9565, or by e-mail to FORMS.Resource@nrc.gov. Guidance on submitting electronic fingerprints can be found at http://www.nrc.gov/site-help/e-submittals.html.

b. Fees for the processing of fingerprint checks are due upon application. Licensees shall submit payment with the application for the processing of fingerprints through corporate check, certified check, cashier's check, money order, or electronic payment, made payable to "U.S. NRC." (For guidance on making electronic payments, contact the Security Branch, Division of Facilities and Security at 1-301-492-3531.) Combined payment for multiple applications is acceptable. The Nuclear Regulatory Commission publishes the amount of the fingerprint check application fee on the NRC's public Web site. (To find the current fee amount, go to the Electronic Submittals page at http://www.nrc.gov/site-help/e-submittals.html and see the link for the Criminal History Program under Electronic Submission Systems.)

c. The Nuclear Regulatory Commission will forward to the submitting licensee all data received from the FBI as a result of the licensee's application(s) for criminal history records checks.

[**ARC 1479C**, IAB 6/11/14, effective 7/16/14]

641—37.28 Reserved.

641—37.29(136C) Relief from fingerprinting, identification, and criminal history records checks and other elements of background investigations for designated categories of individuals permitted unescorted access to certain radioactive materials.

37.29(1) Fingerprinting, identification, and criminal history records checks required by Section 149 of the Atomic Energy Act of 1954, as amended through July 16, 2014, and other elements of the background investigation are not required for the following individuals prior to granting unescorted access to category 1 or category 2 quantities of radioactive materials:

a. An employee of the Nuclear Regulatory Commission or of the executive branch of the U.S. government who has undergone fingerprinting for a prior U.S. government criminal history records check;

b. A member of Congress;

c. An employee of a member of Congress or congressional committee who has undergone fingerprinting for a prior U.S. government criminal history records check;

d. The governor of a state or the governor's designated state employee representative;

e. Federal, state, or local law enforcement personnel;

f. State radiation control program directors and state homeland security advisors or their designated state employee representatives;

g. Agreement state employees conducting security inspections on behalf of the NRC under an agreement executed under Section 274.i. of the Atomic Energy Act;

h. Representatives of the International Atomic Energy Agency (IAEA) engaged in activities associated with the U.S./IAEA Safeguards Agreement who have been certified by the NRC;

i. Emergency response personnel who are responding to an emergency;

j. Commercial vehicle drivers for road shipments of category 2 quantities of radioactive material;

k. Package handlers at transportation facilities such as freight terminals and railroad yards;

l. Any individual who has an active federal security clearance, provided that the individual makes available the appropriate documentation. Written confirmation from the agency/employer that granted the federal security clearance or reviewed the criminal history records check must be provided to the licensee. The licensee shall retain this documentation for a period of three years from the date the individual no longer requires unescorted access to category 1 or category 2 quantities of radioactive material; and

m. Any individual employed by a service provider licensee for which the service provider licensee has conducted the background investigation for the individual and approved the individual for unescorted access to category 1 or category 2 quantities of radioactive material. Written verification from the service provider must be provided to the licensee. The licensee shall retain the documentation for a period of three years from the date the individual no longer requires unescorted access to category 1 or category 2 quantities of radioactive material.

37.29(2) Fingerprinting, and the identification and criminal history records checks required by Section 149 of the Atomic Energy Act of 1954, as amended through July 16, 2014, are not required for an individual who has had a favorably adjudicated U.S. government criminal history records check within the last five years, under a comparable U.S. government program involving fingerprinting and an FBI identification and criminal history records check provided that the individual makes available the appropriate documentation. Written confirmation from the agency/employer that reviewed the criminal history records check must be provided to the licensee. The licensee shall retain this documentation for a period of three years from the date the individual no longer requires unescorted access to category 1 or category 2 quantities of radioactive material. These programs include, but are not limited to:

a. National Agency Check;

b. Transportation Worker Identification Credentials (TWIC) under 49 CFR Part 1572;

c. Bureau of Alcohol, Tobacco, Firearms, and Explosives background check and clearances under 27 CFR Part 555;

d. Health and Human Services security risk assessments for possession and use of select agents and toxins under 42 CFR Part 73;

e. Hazardous material security threat assessment for hazardous material endorsement to commercial driver's license under 49 CFR Part 1572; and

f. Customs and Border Protection's Free and Secure Trade (FAST) Program.

[**ARC 1479C**, IAB 6/11/14, effective 7/16/14]

641—37.30 Reserved.

641—37.31(136C) Protection of information.

37.31(1) Each licensee who obtains background information on an individual under these rules shall establish and maintain a system of files and written procedures for protection of the record and the personal information from unauthorized disclosure.

37.31(2) The licensee may not disclose the record or personal information collected and maintained to persons other than the subject individual, the individual's representative, or to those who have a need to have access to the information in performing assigned duties in the process of granting or denying unescorted access to category 1 or category 2 quantities of radioactive material, safeguards information,

or safeguards information-modified handling. No individual authorized to have access to the information may disseminate the information to any other individual who does not have a need to know.

37.31(3) The personal information obtained on an individual from a background investigation may be provided to another licensee:

a. Upon the individual's written request to the licensee holding the data to disseminate the information contained in the individual's file; and

b. If the recipient licensee verifies information such as name, date of birth, social security number, gender, and other applicable physical characteristics.

37.31(4) The licensee shall make background investigation records obtained under these rules available for examination by an authorized representative of the agency to determine compliance with the regulations and laws.

37.31(5) The licensee shall retain all fingerprint and criminal history records on an individual (including data indicating no record) received from the FBI, or a copy of these records if the individual's file has been transferred, for three years from the date the individual no longer requires unescorted access to category 1 or category 2 quantities of radioactive material.

[**ARC 1479C**, IAB 6/11/14, effective 7/16/14]

641—37.32 Reserved.

641—37.33(136C) Access authorization program review.

37.33(1) Each licensee shall be responsible for the continuing effectiveness of the access authorization program. Each licensee shall ensure that access authorization programs are reviewed to confirm compliance with the requirements of these rules and that comprehensive actions are taken to correct any noncompliance that is identified. The review program shall evaluate all program performance objectives and requirements. Each licensee shall, at 12-month intervals, review the access program content and implementation.

37.33(2) The results of the reviews, along with any recommendations, must be documented. Each review report must identify conditions that are adverse to the proper performance of the access authorization program, the cause of the condition(s), and, when appropriate, recommend corrective actions, and corrective actions taken. The licensee shall review the findings and take any additional corrective actions necessary to preclude repetition of the condition, including reassessment of the deficient areas where indicated.

37.33(3) Review records must be maintained for three years.

[**ARC 1479C**, IAB 6/11/14, effective 7/16/14]

641—37.34 to **37.40** Reserved.

PHYSICAL PROTECTION REQUIREMENTS DURING USE

641—37.41(136C) Security program.

37.41(1) *Applicability.*

a. Each licensee that possesses an aggregated category 1 or category 2 quantity of radioactive material shall establish, implement, and maintain a security program in accordance with the requirements of rules 641—37.41(136C) to 641—37.57(136C).

b. An applicant for a new license and a licensee that would become newly subject to the requirements of this chapter upon application for amendment of its license shall implement the requirements of this chapter and be inspected by the agency, as appropriate, before a new license or license amendment will be issued.

c. Any licensee that has not previously implemented the security orders or been subject to the provisions of these rules shall provide written notification to the agency as specified in rule 641—37.3(136C) at least 90 days before aggregating radioactive material to a quantity that equals or exceeds the category 2 threshold.

37.41(2) *General performance objective.* Each licensee shall establish, implement, and maintain a security program that is designed to monitor and, without delay, detect, assess, and respond to an actual or attempted unauthorized access to category 1 or category 2 quantities of radioactive material.

37.41(3) *Program features.* Each licensee's security program must include the program features, as appropriate, described in this chapter.

[**ARC 1479C**, IAB 6/11/14, effective 7/16/14]

641—37.42 Reserved.

641—37.43(136C) General security program requirements.

37.43(1) *Security plan.*

a. Each licensee identified in 37.41(1)*"a"* shall develop a written security plan specific to its facilities and operations. The purpose of the security plan is to establish the licensee's overall security strategy to ensure the integrated and effective functioning of the security program required by these rules. The security plan must, at a minimum:

(1) Describe the measures and strategies used to implement the requirements of these rules; and

(2) Identify the security resources, equipment, and technology used to satisfy the requirements of these rules.

b. The security plan must be reviewed and approved by the individual with overall responsibility for the security program.

c. A licensee shall revise its security plan as necessary to ensure the effective implementation of agency requirements. The licensee shall ensure that:

(1) The revision has been reviewed and approved by the individual with overall responsibility for the security program; and

(2) The affected individuals are instructed on the revised plan before the changes are implemented.

d. The licensee shall retain a copy of the current security plan as a record for three years after the security plan is no longer required. If any portion of the plan is superseded, the licensee shall retain the superseded material for three years after the record is superseded.

37.43(2) *Implementing procedures.*

a. The licensee shall develop and maintain written procedures that document how the requirements of these rules and the security plan will be met.

b. The implementing procedures and revisions to these procedures must be approved in writing by the individual with overall responsibility for the security program.

c. The licensee shall retain a copy of the current procedure as a record for three years after the procedure is no longer needed. Superseded portions of the procedure must be retained for three years after the record is superseded.

37.43(3) *Training.*

a. Each licensee shall conduct training to ensure that those individuals implementing the security program possess and maintain the knowledge, skills, and abilities to carry out their assigned duties and responsibilities effectively. The training must include instruction in:

(1) The licensee's security program and procedures to secure category 1 or category 2 quantities of radioactive material, and in the purposes and functions of the security measures employed;

(2) The responsibility to report promptly to the licensee any condition that causes or may cause a violation of agency requirements;

(3) The responsibility of the licensee to report promptly to the local law enforcement agency and licensee any actual or attempted theft, sabotage, or diversion of category 1 or category 2 quantities of radioactive material; and

(4) The appropriate response to security alarms.

b. In determining those individuals who shall be trained on the security program, the licensee shall consider each individual's assigned activities during authorized use and response to potential situations involving actual or attempted theft, diversion, or sabotage of category 1 or category 2 quantities of

radioactive material. The extent of the training must be commensurate with the individual's potential involvement in the security of category 1 or category 2 quantities of radioactive material.

c. Refresher training must be provided at a frequency not to exceed 12 months and when significant changes have been made to the security program. This training must include:

(1) Review of the training requirements of rule 641—37.43(136C) and any changes made to the security program since the last training;

(2) Reports on any relevant security issues, problems, and lessons learned;

(3) Relevant results of agency inspections; and

(4) Relevant results of the licensee's program review and testing and maintenance.

d. The licensee shall maintain records of the initial and refresher training for three years from the date of the training. The training records must include dates of the training, topics covered, a list of licensee personnel in attendance, and related information.

37.43(4) *Protection of information.*

a. Licensees authorized to possess category 1 or category 2 quantities of radioactive material shall limit access to and unauthorized disclosure of their security plan, implementing procedures, and the list of individuals that have been approved for unescorted access.

b. Efforts to limit access shall include the development, implementation, and maintenance of written policies and procedures for controlling access to, and for proper handling and protection against unauthorized disclosure of, the security plan and implementing procedures.

c. Before granting an individual access to the security plan or implementing procedures, licensees shall:

(1) Evaluate an individual's need to know the security plan or implementing procedures; and

(2) If the individual has not been authorized for unescorted access to category 1 or category 2 quantities of radioactive material, safeguards information, or safeguards information-modified handling, the licensee must complete a background investigation to determine the individual's trustworthiness and reliability. A trustworthiness and reliability determination shall be conducted by the reviewing official and shall include the background investigation elements contained in 37.25(1).

d. Licensees need not subject the following individuals to the background investigation elements for protection of information:

(1) The categories of individuals listed in rule 641—37.29(136C); or

(2) Security service provider employees, provided written verification that the employee has been determined to be trustworthy and reliable, by the required background investigation in 37.25(1), has been provided by the security service provider.

e. The licensee shall document the basis for concluding that an individual is trustworthy and reliable and should be granted access to the security plan or implementing procedures.

f. Licensees shall maintain a list of persons currently approved for access to the security plan or implementing procedures. When a licensee determines that a person no longer needs access to the security plan or implementing procedures or no longer meets the access authorization requirements for access to the information, the licensee shall remove the person from the approved list as soon as possible, but no later than seven working days, and take prompt measures to ensure that the individual is unable to obtain the security plan or implementing procedures.

g. When the security plan is not in use, the licensee shall store its security plan and implementing procedures in a manner to prevent unauthorized access. Information stored in nonremovable electronic form must be password protected.

h. The licensee shall retain as a record for three years after the document is no longer needed:

(1) A copy of the information protection procedures; and

(2) The list of individuals approved for access to the security plan or implementing procedures.

[**ARC 1479C**, IAB 6/11/14, effective 7/16/14]

641—37.44 Reserved.

641—37.45(136C) LLEA coordination.

37.45(1) A licensee subject to these rules shall coordinate, to the extent practicable, with an LLEA for responding to threats to the licensee's facility, including any necessary armed response. The information provided to the LLEA must include:

a. A description of the facilities and the category 1 and category 2 quantities of radioactive materials along with a description of the licensee's security measures that have been implemented to comply with these rules; and

b. A notification that the licensee will request a timely armed response by the LLEA to any actual or attempted theft, sabotage, or diversion of category 1 or category 2 quantities of material.

37.45(2) The licensee shall notify the agency within three business days if:

a. The LLEA has not responded to the request for coordination within 60 days of the coordination request; or

b. The LLEA notifies the licensee that the LLEA does not plan to participate in coordination activities.

37.45(3) The licensee shall document its efforts to coordinate with the LLEA. The documentation must be kept for three years.

37.45(4) The licensee shall coordinate with the LLEA at least every 12 months, or when changes to the facility design or operation adversely affect the potential vulnerability of the licensee's material to theft, sabotage, or diversion.

[**ARC 1479C**, IAB 6/11/14, effective 7/16/14]

641—37.46 Reserved.

641—37.47(136C) Security zones.

37.47(1) Licensees shall ensure that all aggregated category 1 and category 2 quantities of radioactive material are used or stored within licensee established security zones. Security zones may be permanent or temporary.

37.47(2) Temporary security zones must be established as necessary to meet the licensee's transitory or intermittent business activities, such as periods of maintenance, source delivery, and source replacement.

37.47(3) Security zones must, at a minimum, allow unescorted access only to approved individuals through:

a. Isolation of category 1 and category 2 quantities of radioactive materials by the use of continuous physical barriers that allow access to the security zone only through established access control points. A physical barrier is a natural or man-made structure or formation sufficient for the isolation of the category 1 or category 2 quantities of radioactive material within a security zone; or

b. Direct control of the security zone by approved individuals at all times; or

c. A combination of continuous physical barriers and direct control.

37.47(4) For category 1 quantities of radioactive material during periods of maintenance, source receipt, preparation for shipment, installation, or source removal or exchange, the licensee shall, at a minimum, provide sufficient individuals approved for unescorted access to maintain continuous surveillance of sources in temporary security zones and in any security zone in which physical barriers or intrusion detection systems have been disabled to allow such activities.

37.47(5) Individuals not approved for unescorted access to category 1 or category 2 quantities of radioactive material must be escorted by an approved individual when in a security zone.

[**ARC 1479C**, IAB 6/11/14, effective 7/16/14]

641—37.48 Reserved.

641—37.49(136C) Monitoring, detection, and assessment.

37.49(1) *Monitoring and detection.*

a. Licensees shall establish and maintain the capability to continuously monitor and detect without delay all unauthorized entries into their security zones. Licensees shall provide the means to maintain

continuous monitoring and detection capability in the event of a loss of the primary power source, or provide for an alarm and response in the event of a loss of this capability to continuously monitor and detect unauthorized entries.

b. Monitoring and detection must be performed by:

(1) A monitored intrusion detection system that is linked to an onsite or offsite central monitoring facility; or

(2) Electronic devices for intrusion detection alarms that will alert nearby facility personnel; or

(3) A monitored video surveillance system; or

(4) Direct visual surveillance by approved individuals located within the security zone; or

(5) Direct visual surveillance by a licensee-designated individual located outside the security zone.

c. A licensee subject to these rules shall also have a means to detect unauthorized removal of the radioactive material from the security zone. This detection capability must provide:

(1) For category 1 quantities of radioactive material, immediate detection of any attempted unauthorized removal of the radioactive material from the security zone. Such immediate detection capability must be provided by:

1. Electronic sensors linked to an alarm; or
2. Continuous monitored video surveillance; or
3. Direct visual surveillance.

(2) For category 2 quantities of radioactive material, weekly verification through physical checks, tamper indicating devices, use, or other means to ensure that the radioactive material is present.

37.49(2) *Assessment.* Licensees shall immediately assess each actual or attempted unauthorized entry into the security zone to determine whether the unauthorized access was an actual or attempted theft, sabotage, or diversion.

37.49(3) *Personnel communications and data transmission.* For personnel and automated or electronic systems supporting the licensee's monitoring, detection, and assessment systems, licensees shall:

a. Maintain continuous capability for personnel communication and electronic data transmission and processing among site security systems; and

b. Provide an alternative communication capability for personnel, and an alternative data transmission and processing capability, in the event of a loss of the primary means of communication or data transmission and processing. Alternative communications and data transmission systems may not be subject to the same failure modes as the primary systems.

37.49(4) *Response.* Licensees shall immediately respond to any actual or attempted unauthorized access to the security zones, or actual or attempted theft, sabotage, or diversion of category 1 or category 2 quantities of radioactive material at licensee facilities or temporary job sites. For any unauthorized access involving an actual or attempted theft, sabotage, or diversion of category 1 or category 2 quantities of radioactive material, the licensee's response shall include requesting, without delay, an armed response from the LLEA.

[**ARC 1479C**, IAB 6/11/14, effective 7/16/14]

641—37.50 Reserved.

641—37.51(136C) Maintenance and testing.

37.51(1) Each licensee subject to these rules shall implement a maintenance and testing program to ensure that intrusion alarms, associated communication systems, and other physical components of the systems used to secure or detect unauthorized access to radioactive material are maintained in operable condition and are capable of performing their intended function when needed. The equipment relied on to meet the security requirements of this chapter must be inspected and tested for operability and performance at the manufacturer's suggested frequency. If there is no suggested manufacturer's suggested frequency, the testing must be performed at least annually, not to exceed 12 months.

37.51(2) The licensee shall maintain records on the maintenance and testing activities for three years.

[**ARC 1479C**, IAB 6/11/14, effective 7/16/14]

641—37.52 Reserved.

641—37.53(136C) Requirements for mobile devices. Each licensee that possesses mobile devices containing category 1 or category 2 quantities of radioactive material must:

37.53(1) Have two independent physical controls that form tangible barriers to secure the material from unauthorized removal when the device is not under direct control and constant surveillance by the licensee; and

37.53(2) For devices in or on a vehicle or trailer, unless the health and safety requirements for a site prohibit the disabling of the vehicle, utilize a method to disable the vehicle or trailer when not under direct control and constant surveillance by the licensee. Licensees shall not rely on the removal of an ignition key to meet this requirement.

[**ARC 1479C**, IAB 6/11/14, effective 7/16/14]

641—37.54 Reserved.

641—37.55(136C) Security program review.

37.55(1) Each licensee shall be responsible for the continuing effectiveness of the security program. Each licensee shall ensure that the security program is reviewed to confirm compliance with the requirements of these rules and that comprehensive actions are taken to correct any noncompliance that is identified. The review must include the radioactive material security program content and implementation. Each licensee shall periodically (at least annually) review the security program content and implementation.

37.55(2) The results of the review, along with any recommendations, must be documented. Each review report must identify conditions that are adverse to the proper performance of the security program, the cause of the condition(s), and, when appropriate, recommend corrective actions, and corrective actions taken. The licensee shall review the findings and take any additional corrective actions necessary to preclude repetition of the condition, including reassessment of the deficient areas where indicated.

37.55(3) The licensee shall maintain the review documentation for three years.

[**ARC 1479C**, IAB 6/11/14, effective 7/16/14]

641—37.56 Reserved.

641—37.57(136C) Reporting of events.

37.57(1) The licensee shall immediately notify the LLEA after determining that an unauthorized entry resulted in an actual or attempted theft, sabotage, or diversion of a category 1 or category 2 quantity of radioactive material. As soon as possible after initiating a response, but not at the expense of causing delay or interfering with the LLEA response to the event, the licensee shall notify the agency at (515)281-3478 (normal hours) or (515)323-4360 (after hours and holidays). In no case shall the notification to the agency be later than four hours after the discovery of any attempted or actual theft, sabotage, or diversion.

37.57(2) The licensee shall assess any suspicious activity related to possible theft, sabotage, or diversion of category 1 or category 2 quantities of radioactive material and notify the LLEA as appropriate. As soon as possible but not later than four hours after notifying the LLEA, the licensee shall notify the agency at (515)281-3478 (normal hours) or (515)323-4360 (after hours and holidays).

37.57(3) The initial telephonic notification required by 37.57(1) must be followed within a period of 30 days by a written report submitted to the agency. The report must include sufficient information for agency analysis and evaluation, including identification of any necessary corrective actions to prevent future instances.

[**ARC 1479C**, IAB 6/11/14, effective 7/16/14]

641—37.58 to **37.70** Reserved.

PHYSICAL PROTECTION IN TRANSIT

641—37.71(136C) Additional requirements for transfer of category 1 and category 2 quantities of radioactive material. A licensee transferring a category 1 or category 2 quantity of radioactive material to a licensee of the agency, the Nuclear Regulatory Commission or an agreement state shall meet the license verification provisions listed in this rule instead of those listed in 641—subrule 39.4(41):

37.71(1) Any licensee transferring category 1 quantities of radioactive material to a licensee of the agency, the Nuclear Regulatory Commission or an agreement state, prior to conducting such transfer, shall verify with the agency, the NRC's license verification system or the license-issuing authority that the transferee's license authorizes the receipt of the type, form, and quantity of radioactive material to be transferred and that the licensee is authorized to receive radioactive material at the location requested for delivery. If the verification is conducted by contacting the license-issuing authority, the transferor shall document the verification. For transfers within the same organization, the licensee does not need to verify the transfer.

37.71(2) Any licensee transferring category 2 quantities of radioactive material to a licensee of the agency, the Nuclear Regulatory Commission or an agreement state, prior to conducting such transfer, shall verify with the agency, the NRC's license verification system or the license-issuing authority that the transferee's license authorizes the receipt of the type, form, and quantity of radioactive material to be transferred. If the verification is conducted by contacting the license-issuing authority, the transferor shall document the verification. For transfers within the same organization, the licensee does not need to verify the transfer.

37.71(3) In an emergency where the licensee cannot reach the agency, or the license-issuing authority and the license verification system are nonfunctional, the licensee may accept a written certification by the transferee that it is authorized by license to receive the type, form, and quantity of radioactive material to be transferred. The certification must include the license number, current revision number, issuing agency, expiration date and, for a category 1 shipment, the authorized address. The licensee shall keep a copy of the certification. The certification must be confirmed by contacting the agency or by use of the NRC's license verification system or by contacting the license-issuing authority by the end of the next business day.

37.71(4) The transferor shall keep a copy of the verification documentation as a record for three years.

[**ARC 1479C**, IAB 6/11/14, effective 7/16/14]

641—37.72 Reserved.

641—37.73(136C) Applicability of physical protection of category 1 and category 2 quantities of radioactive material during transit. The shipping licensee shall be responsible for meeting the requirements of this chapter unless the receiving licensee has agreed in writing to arrange for the in-transit physical protection required under this chapter.

[**ARC 1479C**, IAB 6/11/14, effective 7/16/14]

641—37.74 Reserved.

641—37.75(136C) Preplanning and coordination of shipment of category 1 or category 2 quantities of radioactive material.

37.75(1) Each licensee that plans to transport, or deliver to a carrier for transport, licensed material that is a category 1 quantity of radioactive material outside the confines of the licensee's facility or other place of use or storage shall:

a. Preplan and coordinate shipment arrival and departure times with the receiving licensee;

b. Preplan and coordinate shipment information with the governor or the governor's designee of any state through which the shipment will pass to:

(1) Discuss the state's intention to provide law enforcement escorts; and

(2) Identify safe havens; and

c. Document the preplanning and coordination activities.

37.75(2) Each licensee that plans to transport, or deliver to a carrier for transport, licensed material that is a category 2 quantity of radioactive material outside the confines of the licensee's facility or other place of use or storage shall coordinate the shipment no-later-than arrival time and the expected shipment arrival with the receiving licensee. The licensee shall document the coordination activities.

37.75(3) Each licensee who receives a shipment of a category 2 quantity of radioactive material shall confirm receipt of the shipment with the originator. If the shipment has not arrived by the no-later-than arrival time, the receiving licensee shall notify the originator.

37.75(4) Each licensee who transports or plans to transport a shipment of a category 2 quantity of radioactive material and determines that the shipment will arrive after the no-later-than arrival time provided pursuant to 37.75(2) shall promptly notify the receiving licensee of the new no-later-than arrival time.

37.75(5) The licensee shall retain a copy of the documentation for preplanning and coordination and any revision thereof, as a record for three years.

[**ARC 1479C**, IAB 6/11/14, effective 7/16/14]

641—37.76 Reserved.

641—37.77(136C) Advance notification of shipment of category 1 quantities of radioactive material.

37.77(1) As specified in 37.77(1)*"a"* and *"b,"* each licensee shall provide advance notification to the NRC and the governor of a state, or the governor's designee, of the shipment of licensed material in a category 1 quantity, through or across the boundary of the state, before the transport, or delivery to a carrier for transport, of the licensed material outside the confines of the licensee's facility or other place of use or storage.

a. Procedures for submitting advance notification.

(1) The notification must be made to the NRC and to the office of each appropriate governor or governor's designee. The contact information, including telephone and mailing addresses, of governors and governors' designees, is available on the NRC's Web site at http://nrc-stp.ornl.gov/special/designee.pdf. A list of the contact information is also available upon request from the Director, Division of Intergovernmental Liaison and Rulemaking, Office of Federal and State Materials and Environmental Management Programs, U.S. Nuclear Regulatory Commission, Washington, DC 20555-0001. Notifications to the NRC must be to the NRC's Director, Division of Security Policy, Office of Nuclear Security and Incident Response, U.S. Nuclear Regulatory Commission, Washington, DC 20555-0001. The notification to the NRC may be made by e-mail to RAMQC_SHIPMENTS@nrc.gov or by fax to 1-301-816-5151.

(2) A notification delivered by mail must be postmarked at least seven days before transport of the shipment commences at the shipping facility.

(3) A notification delivered by any means other than mail must reach the NRC at least four days before the transport of the shipment commences and must reach the office of the governor or the governor's designee at least four days before transport of a shipment within or through the state.

b. Information to be furnished in advance notification of shipment. Each advance notification of shipment of category 1 quantities of radioactive material must contain the following information, if available at the time of notification:

(1) The name, address, and telephone number of the shipper, carrier, and receiver of the category 1 radioactive material;

(2) The license numbers of the shipper and receiver;

(3) A description of the radioactive material contained in the shipment, including the radionuclides and quantity;

(4) The point of origin of the shipment and the estimated time and date that shipment will commence;

(5) The estimated time and date that the shipment is expected to enter each state along the route;

(6) The estimated time and date of arrival of the shipment at the destination; and

(7) A point of contact, with a telephone number, for current shipment information.

c. *Revision notice.*

(1) The licensee shall provide any information not previously available at the time of the initial notification, as soon as the information becomes available but not later than commencement of the shipment, to the governor of the state or the governor's designee and to the NRC's Director of Nuclear Security, Office of Nuclear Security and Incident Response, U.S. Nuclear Regulatory Commission, Washington, DC 20555-0001.

(2) A licensee shall promptly notify the governor of the state or the governor's designee of any changes to the information provided in accordance with 37.77(1)*"b"* and 37.77(1)*"c"*(1). The licensee shall also immediately notify the NRC's Director, Division of Security Policy, Office of Nuclear Security and Incident Response, U.S. Nuclear Regulatory Commission, Washington, DC 20555-0001, of any such changes.

d. *Cancellation notice.* Each licensee who cancels a shipment for which advance notification has been sent shall send a cancellation notice to the governor of each state or to the governor's designee previously notified and to the NRC's Director, Division of Security Policy, Office of Nuclear Security and Incident Response, U.S. Nuclear Regulatory Commission, Washington, DC 20555-0001. The licensee shall send the cancellation notice before the shipment would have commenced or as soon thereafter as possible. The licensee shall state in the notice that it is a cancellation and identify the advance notification that is being canceled.

e. *Records.* The licensee shall retain a copy of the advance notification and any revision and cancellation notices as a record for three years.

[**ARC 1479C**, IAB 6/11/14, effective 7/16/14]

641—37.78 Reserved.

641—37.79(136C) Requirements for physical protection of category 1 and category 2 quantities of radioactive material during shipment.

37.79(1) *Shipments by road.*

a. Each licensee who transports, or delivers to a carrier for transport, in a single shipment, a category 1 quantity of radioactive material shall:

(1) Ensure that movement control centers are established that maintain position information from a remote location. These control centers must monitor shipments 24 hours a day, seven days a week, and have the ability to communicate immediately, in an emergency, with the appropriate law enforcement agencies.

(2) Ensure that redundant communications are established that allow the transport to contact the escort vehicle (when used) and movement control center at all times. Redundant communications may not be subject to the same interference factors as the primary communication.

(3) Ensure that shipments are continuously and actively monitored by a telemetric position monitoring system or an alternative tracking system reporting to a movement control center. A movement control center must provide positive confirmation of the location, status, and control over the shipment. The movement control center must be prepared to promptly implement preplanned procedures in response to deviations from the authorized route or a notification of actual, attempted, or suspicious activities related to the theft, loss, or diversion of a shipment. These procedures will include, but not be limited to, the identification of and contact information for the appropriate LLEA along the shipment route.

(4) Provide an individual to accompany the driver for those highway shipments with a driving time period greater than the maximum number of allowable hours of service in a 24-hour-duty day as established by the Department of Transportation Federal Motor Carrier Safety Administration. The accompanying individual may be another driver.

(5) Develop written normal and contingency procedures to address:

1. Notifications to the communication center and law enforcement agencies;

2. Communication protocols. Communication protocols must include a strategy for the use of authentication codes and duress codes and provisions for refueling or other stops, detours, and locations where communication is expected to be temporarily lost;

3. Loss of communications; and

4. Responses to an actual or attempted theft or diversion of a shipment.

(6) Each licensee who makes arrangements for the shipment of category 1 quantities of radioactive material shall ensure that drivers, accompanying personnel, and movement control center personnel have access to the normal and contingency procedures.

b. Each licensee that transports category 2 quantities of radioactive material shall maintain constant control or surveillance, or both, during transit and have the capability for immediate communication to summon appropriate response or assistance.

c. Each licensee who delivers to a carrier for transport, in a single shipment, a category 2 quantity of radioactive material shall:

(1) Use carriers that have established package tracking systems. An established package tracking system is a documented, proven, and reliable system routinely used to transport objects of value. In order for a package tracking system to maintain constant control or surveillance, or both, the package tracking system must allow the shipper or transporter to identify when and where the package was last reported and when it should arrive at the next point of control.

(2) Use carriers that maintain constant control or surveillance, or both, during transit and have the capability for immediate communication to summon appropriate response or assistance; and

(3) Use carriers that have established tracking systems that require an authorized signature prior to releasing the package for delivery or return.

37.79(2) *Shipments by rail.*

a. Each licensee who transports, or delivers to a carrier for transport, in a single shipment, a category 1 quantity of radioactive material shall:

(1) Ensure that rail shipments are monitored by a telemetric position monitoring system or an alternative tracking system reporting to the licensee, third-party, or railroad communications center. The communications center shall provide positive confirmation of the location of the shipment and its status. The communications center shall implement preplanned procedures in response to deviations from the authorized route or to a notification of actual, attempted, or suspicious activities related to the theft or diversion of a shipment. These procedures will include, but not be limited to, the identification of and contact information for the appropriate LLEA along the shipment route.

(2) Ensure that periodic reports to the communications center are made at preset intervals.

b. Each licensee who transports, or delivers to a carrier for transport, in a single shipment, a category 2 quantity of radioactive material shall:

(1) Use carriers that have established package tracking systems. An established package tracking system is a documented, proven, and reliable system routinely used to transport objects of value. In order for a package tracking system to maintain constant control or surveillance, or both, the package tracking system must allow the shipper or transporter to identify when and where the package was last reported and when it should arrive at the next point of control.

(2) Use carriers that maintain constant control or surveillance, or both, during transit and have the capability for immediate communication to summon appropriate response or assistance; and

(3) Use carriers that have established tracking systems that require an authorized signature prior to releasing the package for delivery or return.

37.79(3) *Investigations.* Each licensee who makes arrangements for the shipment of category 1 quantities of radioactive material shall immediately conduct an investigation upon the discovery that a category 1 shipment is lost or missing. Each licensee who makes arrangements for the shipment of category 2 quantities of radioactive material shall immediately conduct an investigation, in coordination with the receiving licensee, of any shipment that has not arrived by the designated no-later-than arrival time.

[**ARC 1479C**, IAB 6/11/14, effective 7/16/14]

641—37.80 Reserved.

641—37.81(136C) Reporting of events.

37.81(1) The shipping licensee shall notify the appropriate LLEA and the agency at (515)281-3478 (normal hours) or (515)323-4360 (after hours and holidays) within 1 hour of the shipping licensee's determination that a shipment of category 1 quantities of radioactive material is lost or missing. The appropriate LLEA would be the law enforcement agency in the area of the shipment's last confirmed location. During the investigation required by 37.79(3), the shipping licensee will provide agreed-upon updates to the agency on the status of the investigation.

37.81(2) The shipping licensee shall notify the agency at (515)281-3478 (normal hours) or (515)323-4360 (after hours and holidays) within 4 hours of the shipping licensee's determination that a shipment of category 2 quantities of radioactive material is lost or missing. If, after 24 hours of its determination that the shipment is lost or missing and the radioactive material has not been located and secured, the licensee shall immediately notify the agency.

37.81(3) The shipping licensee shall notify the designated LLEA along the shipment route as soon as possible upon discovery of any actual or attempted theft or diversion of a shipment or suspicious activities related to the theft or diversion of a shipment of a category 1 quantity of radioactive material. As soon as possible after notifying the LLEA, the licensee shall notify the agency at (515)281-3478 (normal hours) or (515)323-4360 (after hours and holidays) upon discovery of any actual or attempted theft or diversion of a shipment, or any suspicious activity related to the shipment, of category 1 radioactive material.

37.81(4) The shipping licensee shall notify the agency at (515)281-3478 (normal hours) or (515)323-4360 (after hours and holidays) as soon as possible upon discovery of any actual or attempted theft or diversion of a shipment, or any suspicious activity related to the shipment, of a category 2 quantity of radioactive material.

37.81(5) The shipping licensee shall notify the agency at (515)281-3478 (normal hours) or (515)323-4360 (after hours and holidays) and the LLEA as soon as possible upon recovery of any lost or missing category 1 quantities of radioactive material.

37.81(6) The shipping licensee shall notify the agency at (515)281-3478 (normal hours) or (515)323-4360 (after hours and holidays) as soon as possible upon recovery of any lost or missing category 2 quantities of radioactive material.

37.81(7) The initial telephonic notification required by 37.81(1) through 37.81(4) must be followed within a period of 30 days by a written report submitted to the agency. A written report is not required for notifications on suspicious activities required by 37.81(3) and 37.81(4). The report must set forth the following information:

a. A description of the licensed material involved, including kind, quantity, and chemical and physical form;

b. A description of the circumstances under which the loss or theft occurred;

c. A statement of disposition, or probable disposition, of the licensed material involved;

d. Actions that have been taken, or will be taken, to recover the material; and

e. Procedures or measures that have been, or will be, adopted to ensure against a recurrence of the loss or theft of licensed material.

37.81(8) Subsequent to filing the written report, the licensee shall also report any additional substantive information on the loss or theft within 30 days after the licensee learns of such information.
[**ARC 1479C**, IAB 6/11/14, effective 7/16/14]

641—37.82 to **37.100** Reserved.

RECORDS

641—37.101(136C) Form of records. Each record required by this chapter must be legible throughout the retention period specified by each agency rule. The record may be the original or a reproduced copy or a microform, provided that the copy or microform is authenticated by authorized personnel and that the microform is capable of producing a clear copy throughout the required retention period. The record

may also be stored in electronic media with the capability for producing legible, accurate, and complete records during the required retention period. Records, such as letters, drawings, and specifications, must include all pertinent information such as stamps, initials, and signatures. The licensee shall maintain adequate safeguards against tampering with and loss of records.
[**ARC 1479C**, IAB 6/11/14, effective 7/16/14]

641—37.102 Reserved.

641—37.103(136C) Record retention. Licensees shall maintain the records that are required by this chapter for the period specified by the appropriate rule. If a retention period is not otherwise specified, these records must be retained until the agency terminates the facility's license. All records related to this chapter may be destroyed upon agency termination of the facility license.
[**ARC 1479C**, IAB 6/11/14, effective 7/16/14]

641—37.104 Reserved.

641—37.105(136C) Inspections.

37.105(1) Each licensee shall afford to the agency at all reasonable times opportunity to inspect category 1 or category 2 quantities of radioactive material and the premises and facilities wherein the nuclear material is used, produced, or stored.

37.105(2) Each licensee shall make available to the agency for inspection, upon reasonable notice, records kept by the licensee pertaining to its receipt, possession, use, acquisition, import, export, or transfer of category 1 or category 2 quantities of radioactive material.
[**ARC 1479C**, IAB 6/11/14, effective 7/16/14]

CHAPTER 37—APPENDIX A

CATEGORY 1 AND CATEGORY 2 RADIOACTIVE MATERIALS

Table 1—Category 1 and Category 2 Threshold

The terabecquerel (TBq) values are the regulatory standard. The curie (Ci) values specified are obtained by converting from the TBq value. The curie values are provided for practical usefulness only.

Radioactive material	Category 1 (TBq)	Category 1 (Ci)	Category 2 (TBq)	Category 2 (Ci)
Americium-241	60	1,620	0.6	16.2
Americium-241/Be	60	1,620	0.6	16.2
Californium-252	20	540	0.2	5.40
Cobalt-60	30	810	0.3	8.10
Curium-244	50	1,350	0.5	13.5
Cesium-137	100	2,700	1	27.0
Gadolinium-153	1,000	27,000	10	270
Iridium-192	80	2,160	0.8	21.6
Plutonium-238	60	1,620	0.6	16.2
Plutonium-239/Be	60	1,620	0.6	16.2
Promethium-147	40,000	1,080,000	400	10,800
Radium-226	40	1,080	0.4	10.8
Selenium-75	200	5,400	2	54.0
Strontium-90	1,000	27,000	10	270
Thulium-170	20,000	540,000	200	5,400
Ytterbium-169	300	8,100	3	81.0

Note: Calculations Concerning Multiple Sources or Multiple Radionuclides. The "sum of fractions" methodology for evaluating combinations of multiple sources or multiple radionuclides is to be used in determining whether a location meets or exceeds the threshold and is thus subject to the requirements of this chapter.

I. If multiple sources of the same radionuclide and/or multiple radionuclides are aggregated at a location, the sum of the ratios of the total activity of each of the radionuclides must be determined to verify whether the activity at the location is less than the category 1 or category 2 thresholds of Table 1, as appropriate. If the calculated sum of the ratios, using the equation below, is greater than or equal to 1.0, then the applicable requirements of this chapter apply.

II. First determine the total activity for each radionuclide from Table 1. This is done by adding the activity of each individual source, material in any device, and any loose or bulk material that contains the radionuclide. Then use the equation below to calculate the sum of the ratios by inserting the total activity of the applicable radionuclides from Table 1 in the numerator of the equation and the corresponding threshold activity from Table 1 in the denominator of the equation.

Calculations must be performed in metric values (i.e., TBq) and the numerator and denominator values must be in the same units.

R_1 = total activity for radionuclide 1
R_2 = total activity for radionuclide 2
R_N = total activity for radionuclide n
AR_1 = activity threshold for radionuclide 1
AR_2 = activity threshold for radionuclide 2
AR_N = activity threshold for radionuclide n

$$\sum_{1}^{n}\left[\frac{R_1}{AR_1}+\frac{R_2}{AR_2}+\frac{R_n}{AR_n}\right]\geq 1.0$$

These rules are intended to implement Iowa Code chapter 136C.

[Filed ARC 1479C (Notice ARC 1414C, IAB 4/2/14), IAB 6/11/14, effective 7/16/14]

CHAPTER 38
GENERAL PROVISIONS FOR RADIATION MACHINES AND RADIOACTIVE MATERIALS

641—38.1(136C) Purpose and scope.

38.1(1) Except as otherwise specifically provided, these rules apply to all persons who receive, possess, use, transfer, own, or acquire any source of radiation; provided, however, that nothing in these rules shall apply to any person to the extent such person is subject to regulation by the U.S. Nuclear Regulatory Commission. Attention is directed to the fact that regulation by the state of source material, by-product material, and special nuclear material in quantities not sufficient to form a critical mass is subject to the provisions of the agreement between the state and the U.S. Nuclear Regulatory Commission and to 10 CFR Part 150 of the Commission's regulations.

38.1(2) All references to any Code of Federal Regulations (CFR) in this chapter are those in effect as of November 5, 2014.

38.1(3) The provisions of Chapter 38 are in addition to, and not in substitution for, any other applicable portions of 641—Chapter 37 and Chapters 39 to 45.

[**ARC 8982B**, IAB 8/11/10, effective 9/15/10; **ARC 1479C**, IAB 6/11/14, effective 7/16/14; **ARC 1639C**, IAB 10/1/14, effective 11/5/14]

641—38.2(136C) Definitions. As used in these rules, these terms have the definitions set forth below and are adopted by reference and included herein for 641—Chapters 39 to 45.

"Absorbed dose" means the energy imparted by ionizing radiation per unit mass of irradiated material. It is determined as the quotient of dE by dM, where dE is the mean energy imparted by ionizing radiation to matter of mass dM. The SI unit of absorbed dose is joule per kilogram and the special name of the unit of absorbed dose is the gray (Gy). The units of absorbed dose are the gray (Gy) and the rad.

"Absorbed dose rate" means absorbed dose per unit time, for machines with timers, or dose monitor unit per unit time for linear accelerators.

"Accelerator" means any machine capable of accelerating electrons, protons, deuterons, or other charged particles in a vacuum and of discharging the resultant particulate or other radiation into a medium at energies usually in excess of 1 MeV. For purposes of this definition, "particle accelerator" is an equivalent term.

"Accelerator-produced material" means any material made radioactive by a particle accelerator.

"Act" means 1984 Iowa Acts, chapter 1286, relating to regulation of radiation machines and radioactive materials. (Iowa Code chapter 136C)

"Activity" means the rate of disintegration or transformation or decay of radioactive material. The units of activity are the curie (Ci) and the becquerel (Bq).

"Adult" means an individual 18 years of age or older.

"Agency" means the Iowa department of public health.

"Agreement state" means any state with which the U.S. Nuclear Regulatory Commission or the U.S. Atomic Energy Commission has entered into an effective agreement under Subsection 274b of the Atomic Energy Act of 1954 as amended (73 Stat. 689).

"Airborne radioactive material" means any radioactive material dispersed in the air in the form of dusts, fumes, particles, mists, vapors, or gases.

"Airborne radioactivity area" means a room, enclosure, or area in which airborne radioactive material (composed wholly or partly of licensed material) exists in concentrations (1) in excess of the derived air concentrations (DACs) specified in Appendix A of 641—Chapter 40; or (2) to such a degree that an individual present in the area without respiratory protective equipment could exceed, during the hours an individual is present in a week, an intake of 0.6 percent of the annual limit on intake (ALI) or 12 DAC-hours.

"Air kerma (K)" means the kinetic energy released in air by ionizing radiation. Kerma is determined as the quotient of dE by dM, where dE is the sum of the initial kinetic energies of all the charged ionizing

particles liberated by uncharged ionizing particles in air of mass dM. The SI unit of air kerma is joule per kilogram and the special name for the unit of kerma is the gray (Gy).

"Air-purifying respirator" means a respirator with an air-purifying filter, cartridge, or canister that removes specific air contaminants by passing ambient air through the air-purifying element.

"Annually" means at least once every 365 days.

"As low as is reasonably achievable" (ALARA) means making every reasonable effort to maintain exposures to radiation as far below the dose limits in these rules as is practical, consistent with the purpose for which the licensed or registered activity is undertaken, taking into account the state of technology, the economics of improvements in relation to state of technology, the economics of improvements in relation to benefits to the public health and safety, and other societal and socioeconomic considerations, and in relation to utilization of nuclear energy and licensed or registered sources of radiation in the public interest.

"Assembler" means any person engaged in the business of assembling, replacing, or installing one or more components into an X-ray system or subsystem. The term includes the owner of an X-ray system or the employee or agent who assembles components into an X-ray system that is subsequently used to provide professional or commercial services.

"Assigned protection factor (APF)" means the expected workplace level of respiratory protection that would be provided by a properly functioning respirator or a class of respirators to properly fitted and trained users. Operationally, the inhaled concentration can be estimated by dividing the ambient airborne concentration by the APF.

"Atmosphere-supplying respirator" means a respirator that supplies the respirator user with breathing air from a source independent of the ambient atmosphere, and includes supplied-air respirators (SARs) and self-contained breathing apparatus (SCBA) units.

"Background radiation" means radiation from cosmic sources; naturally occurring radioactive materials, including radon (except as a decay product of source or special nuclear material); and global fallout as it exists in the environment from the testing of nuclear explosive devices or from past nuclear accidents such as Chernobyl that contribute to background radiation and are not under the control of the licensee. "Background radiation" does not include sources of radiation from radioactive materials regulated by the agency.

"Barrier" (see "Protective barrier").

"Beam axis" means a line from the source through the centers of the X-ray fields.

"Beam-limiting device" means a field defining collimator, integral to the system, which provides a means to restrict the dimensions of the X-ray field or useful beam.

"Beam monitoring system" means a system designed and installed in the radiation head to detect and measure the radiation present in the useful beam.

"Becquerel" (Bq) means the SI unit of activity. One becquerel is equal to 1 disintegration or transformation per second (dps or tps).

"Bioassay" means the determination of kinds, quantities or concentrations and, in some cases, the locations of radioactive material in the human body, whether by direct measurement, in vivo counting, or by analysis and evaluation of materials excreted or removed from the human body. For purposes of these rules, "radiobioassay" is an equivalent term.

"Bone densitometry unit" means a medical device which uses electronically produced ionizing radiation to determine the density of bone structures of human patients.

"Brachytherapy" means a method of radiation therapy in which sealed sources are utilized to deliver a radiation dose at a distance of up to a few centimeters, by surface, intracavitary, intraluminal, or interstitial application.

"Brachytherapy source" means a radioactive source or a manufacturer-assembled source train or a combination of these sources that is designed to deliver a therapeutic dose within a distance of a few centimeters.

"By-product material" means:

1. Any radioactive material, except special nuclear material, yielded in or made radioactive by exposure to the radiation incident to the process of producing or utilizing special nuclear material;

2. The tailings or wastes produced by the extraction or concentration of uranium or thorium from any ore processed primarily for its source material content, including discrete surface wastes resulting from uranium or thorium solution extraction processes. Underground ore bodies depleted by these solution extraction operations do not constitute "by-product material" within this definition;

3. Any discrete source of radium-226 that is produced, extracted, or converted after extraction, before, on, or after August 8, 2005, for use for a commercial, medical, or research activity or any material that:

- Has been made radioactive by use of a particle accelerator; and
- Is produced, extracted, or converted after extraction, before, on, or after August 8, 2005, for use for a commercial, medical, or research activity; and

4. Any discrete source of naturally occurring radioactive material, other than source material, that:

- The Nuclear Regulatory Commission, in consultation with the Administrator of the Environmental Protection Agency, the Secretary of Energy, the Secretary of Homeland Security, and the head of any other appropriate federal agency, determines would pose a threat to the public health and safety or the common defense and security similar to the threat posed by a discrete source of radium-226; and
- Before, on, or after August 8, 2005, is extracted or converted after extraction for use in a commercial, medical, or research activity.

"Cabinet radiography" means industrial radiography conducted in an enclosure or cabinet shielded so that radiation levels at every location on the exterior meet the limitations specified in 641—40.26(136C).

"Calendar quarter" means not less than 12 consecutive weeks nor more than 14 consecutive weeks. The first calendar quarter of each year shall begin in January and subsequent calendar quarters shall be so arranged such that no day is included in more than one calendar quarter and no day in any one year is omitted from inclusion within a calendar quarter. No licensee or registrant shall change the method of determining calendar quarters for purposes of these rules except at the beginning of a year.

"Calibration" means the determination of (1) the response or reading of an instrument relative to a series of known radiation values over the range of the instrument, or (2) the strength of a source of radiation relative to a standard.

"Carrier" means a person engaged in the transportation of passengers or property by land or water as a common, contract, or private carrier, or by civil aircraft.

"CFR" means Code of Federal Regulations.

"Changeable filters" means any filter, exclusive of inherent filtration, which can be removed from the useful beam through any electronic, mechanical, or physical process.

"Collective dose" means the sum of the individual doses received in a given period of time by a specified population from exposure to a specified source of radiation.

"Committed dose equivalent" ($H_{T,50}$) means the dose equivalent to organs or tissues of reference (T) that will be received from an intake of radioactive material by an individual during the 50-year period following the intake.

"Committed effective dose equivalent" ($H_{E,50}$) is the sum of the products of the weighting factors applicable to each of the body organs or tissues that are irradiated and the committed dose equivalent to each of these organs or tissues ($H_{E,50} = \Sigma w_T, H_{T,50}$).

"Consignment" means each shipment of a package or groups of packages or load of radioactive material offered by a shipper for transport.

"Consortium" means an association of medical use licensees and a PET radionuclide production facility in the same geographical area that jointly own or share in the operation and maintenance cost of the PET radionuclide production facility that produces PET radionuclides for use in producing radioactive drugs within the consortium for noncommercial distributions among its associated members for medical use. The PET radionuclide production facility within the consortium must be located at an educational institution, a federal facility or a medical facility.

"Constraint" or *"dose constraint"* means a value above which specified licensee actions are required.

"Controlled area" means an area, outside of a restricted area but inside the site boundary, access to which can be limited by the licensee or registrant for any reason.

"Critical group" means the group of individuals reasonably expected to receive the greatest exposure to residual radioactivity for any applicable set of circumstances.

"Curie" means a unit of quantity of radioactivity. One curie (Ci) is that quantity of radioactive material which decays at the rate of 3.7E+10 transformations per second (tps).

"Decay-in-storage" means the holding of radioactive material having half-lives of less than 65 days, except Cobalt-57, until it decays to background levels. Before disposal in ordinary trash, the material must have been held for a minimum of ten half-lives and its radioactivity is indistinguishable from background as indicated by a survey meter set on its most sensitive scale with no interposing shielding.

"Decommission" means to remove a facility or site safely from service and reduce residual radioactivity to a level that permits:

1. Release of the property for unrestricted use and termination of the license; or
2. Release of the property under restricted conditions and termination of the license.

"Deep dose equivalent" (H_d), which applies to external whole body exposure, means the dose equivalent at a tissue depth of 1 centimeter (1000 mg/cm^2).

"Demand respirator" means an atmosphere-supplying respirator that admits breathing air to the facepiece only when a negative pressure is created inside the facepiece by inhalation.

"Depleted uranium" means the source material uranium in which the isotope uranium-235 is less than 0.711 weight percent of the total uranium present. Depleted uranium does not include special nuclear material.

"Detector" (see "Radiation detector").

"Diagnostic clinical procedures manual" means a collection of written procedures that describes each method (and other instructions and precautions) by which the licensee performs diagnostic clinical procedures; where each diagnostic clinical procedure has been approved by the authorized user and includes the radiopharmaceutical, dosage, and route of administration.

"Diagnostic imaging system" means an assemblage of components for the generation, emission, reception, transformation, storage and visual display of the resultant image.

"Diagnostic X-ray imaging system" means an assemblage of components for the generation, emission and reception of X-rays and the transformation, storage and visual display of the resultant X-ray image which are designed and used for irradiation of any part of the human or animal body for the purpose of diagnosis or visualization.

"Direct supervision" means guidance and instruction by a qualified individual who is physically present and watching the performance of the radiological operation or procedure and in such proximity that contact can be maintained and immediate assistance can be given as required.

"Discrete source" means a radionuclide that has been processed so that its concentration within a material has been purposely increased for use for commercial, medical, or research activities.

"Disposable respirator" means a respirator for which maintenance is not intended and that is designed to be discarded after excessive breathing resistance, sorbent exhaustion, physical damage, or end-of-service-life renders it unsuitable for use. Examples of this type of respirator are a disposable half-mask respirator or a disposable escape-only self-contained breathing apparatus (SCBA).

"Distinguishable from background" means that the detectable concentration of a radionuclide is statistically different from the background concentration of that radionuclide in the vicinity of the site or, in the case of structures, in similar materials using adequate measurement technology, survey, and statistical techniques.

"Dose" is a generic term that means absorbed dose, dose equivalent, effective dose equivalent, committed dose equivalent, committed effective dose equivalent, total organ dose equivalent, or total effective dose equivalent. For purposes of these rules, "radiation dose" is an equivalent term.

"Dose equivalent (H_T)" means the product of the absorbed dose in tissue, quality factor, and all other necessary modifying factors at the location of interest. The units of dose equivalent are the sievert (Sv) and rem.

"Dose limits" means the permissible upper bounds of radiation doses established in accordance with these rules. For purposes of these rules, "limits" is an equivalent term.

"Effective dose equivalent (H_E)" means the sum of the products of the dose equivalent to each organ or tissue (H_T) and the weighting factor (w_T) applicable to each of the body organs or tissues that are irradiated ($H_E = \Sigma w_T H_T$).

"Embryo/fetus" means the developing human organism from conception until the time of birth.

"Entrance or access point" means any opening through which an individual or extremity of an individual could gain access to radiation areas or to licensed or registered radioactive materials. This includes entry or exit portals of sufficient size to permit human entry, irrespective of their intended use.

"Exposure" means being exposed to ionizing radiation or to radioactive material.

"Exposure" means the quotient of dQ by dm where "dQ" is the absolute value of the total charge of the ions of one sign produced in air when all the electrons (negatrons and positrons) liberated by photons in a volume element of air having mass "dm" are completely stopped in air. (The special unit of exposure is the roentgen (R) (see 38.2(136C) for SI equivalent coulomb per kilogram). When not underlined as above or when indicated as `exposure' or (X), the term "exposure" has a more general meaning in these rules.

"Exposure rate" means the exposure per unit of time, such as roentgen per minute and milliroentgen per hour.

"External dose" means that portion of the dose equivalent received from any source of radiation outside the body.

"Extremity" means hand, elbow, arm below the elbow, foot, knee, and leg below the knee. See 641—subrule 42.1(2) for definitions of "lower extremities" and "upper extremities" for purposes of certification standards.

"Facility" means the location, building, vehicle, or complex under one administrative control, at which radioactive material is stored or used or at which one or more radiation machines are installed, located or used.

"Filtering facepiece (dust mask)" means a negative pressure particulate respirator with a filter as an integral part of the facepiece or with the entire facepiece composed of the filtering medium, which is not equipped with elastomeric sealing surfaces and adjustable straps.

"Fit factor" means a quantitative estimate of the fit of a particular respirator to a specific individual, and typically estimates the ratio of the concentration of a substance in ambient air to its concentration inside the respirator when worn.

"Fit test" means the use of a protocol to qualitatively or quantitatively evaluate the fit of a respirator on an individual.

"Former U.S. Atomic Energy Commission (AEC) or U.S. Nuclear Regulatory Commission (NRC) licensed facilities" means nuclear reactors, nuclear fuel reprocessing plants, uranium enrichment plants, or critical mass experimental facilities where AEC or NRC licenses have been terminated.

"Generally applicable environmental radiation standards" means standards issued by the U.S. Environmental Protection Agency (EPA) under the authority of the Atomic Energy Act of 1954, as amended, that impose limits on radiation exposures or levels, or concentrations or quantities of radioactive material, in the general environment outside the boundaries of locations under the control of persons possessing or using radioactive material.

"Gray (Gy)" means the SI unit of absorbed dose. One gray is equal to an absorbed dose of 1 joule per kilogram (1 Gy=100 rad).

"Half-value layer (HVL)" means the thickness of a specified material which attenuates X-radiation or gamma radiation to an extent such that the air kerma rate, exposure rate or absorbed dose rate is reduced to one-half of the value measured without the material at the same point. The contribution of all scattered radiation, other than any which might be present initially in the beam concerned, is deemed to be excluded.

"Hazardous waste" means those wastes designated as hazardous by U.S. Environmental Protection Agency regulations in 40 CFR Part 261.

"Healing arts" means the occupational fields of diagnosing or treating disease, providing health care and improving health by the practice of medicine, osteopathy, chiropractic, podiatry, dentistry, nursing, veterinary medicine, and supporting professions, such as physician assistants, nurse practitioners, radiologic technologists, and dental hygienists.

"Helmet" means a rigid respiratory inlet covering that also provides head protection against impact and penetration.

"High dose-rate remote afterloader" means a brachytherapy device that remotely delivers a dose rate in excess of 1200 rads (12 gray) per hour at the point or surface where the dose is prescribed.

"High-level radioactive waste" or *"HLW"* means (1) irradiated reactor fuel; (2) liquid wastes resulting from the operation of the first cycle solvent extraction system, or equivalent, and the concentrated wastes from subsequent extraction cycles, or equivalent, in a facility for reprocessing irradiated reactor fuel; and (3) solids into which such liquid wastes have been converted.

"High radiation area" means an area, accessible to individuals, in which radiation levels from radiation sources external to the body could result in an individual's receiving a dose equivalent in excess of 0.1 rem (1 mSv) in 1 hour at 30 centimeters from any source of radiation or 30 centimeters from any surface that the radiation penetrates.

"Highway route controlled quantity" means a quantity within a single package which exceeds:

1. 3,000 times the A_1 value of the radionuclides as specified in 49 CFR 173.435 for special form Class 7 (radioactive) material;
2. 3,000 times the A_2 value of the radionuclides as specified in 49 CFR 173.435 for normal form Class 7 (radioactive) material; or
3. 1,000 TBq (27,000 Ci), whichever is least.

"Hood" means a respiratory inlet covering that completely covers the head and neck and may also cover portions of the shoulders and torso.

"Human use" means the internal or external administration of radiation or radioactive material to human beings.

"Individual" means any human being.

"Individual monitoring" means the assessment of:

1. Dose equivalent by the use of devices designed to be worn by an individual or by the use of survey data; or
2. Committed effective dose equivalent by bioassay or by determination of the time-weighted air concentrations to which an individual has been exposed, that is, DAC-hours. See the definition of DAC-hours in 641—Chapter 40.

"Individual monitoring devices" means devices designed to be worn by a single individual for the assessment of dose equivalent. For purposes of these rules, "personnel dosimeter" and "dosimeter" are equivalent terms. Examples of individual monitoring devices are film badges, thermoluminescent dosimeters (TLDs), pocket ionization chambers, optically stimulated luminescent (OSL) devices, and personal air sampling devices.

"Industrial radiography" means an examination of the structure of materials by nondestructive methods, utilizing ionizing radiation to make radiographic images.

"Inspection" means an official examination or observation including, but not limited to, tests, surveys, and monitoring to determine compliance with rules, regulations, orders, requirements, and conditions of the agency.

"Instrument traceability" means, for ionizing radiation measurements, the ability to show that an instrument has been calibrated at specified time intervals using a national standard or a transfer standard. If a transfer standard is used, the calibration must be from a laboratory accredited by a program which required continuing participation in measurement quality assurance with the National Institute of Standards and Technology or other equivalent national or international program.

"Interlock" means a device preventing the start or continued operation of equipment unless certain predetermined conditions prevail.

"Internal dose" means that portion of the dose equivalent received from radioactive material taken into the body.

"Ionizing radiation." See "Radiation."

"Irradiation" means the exposure of a living being or matter to ionizing radiation.

"Kilovolt (kV)(kilo electron volt (keV))" means the energy equal to that acquired by a particle with one electron charge in passing through a potential difference of 1000 volts in a vacuum.

"Lead equivalent" means the thickness of lead affording the same attenuation, under specified conditions, as the material in question.

"Leakage radiation" means radiation emanating from the diagnostic or therapeutic source assembly except for:

1. The useful beam, and
2. Radiation produced when the exposure switch or timer is not activated.

"Lens dose equivalent (LDE)" applies to the external exposure of the lens of the eye and is taken as the dose equivalent at a tissue depth of 0.3 centimeter (300 mg/cm^2).

"License" means a license issued by the agency in accordance with the rules adopted by the agency.

"Licensed (or registered) material" means radioactive material received, possessed, used, transferred or disposed of under a general or specific license (or registration) issued by the agency.

"Licensed practitioner" means a person licensed or otherwise authorized by law to practice medicine, osteopathy, chiropractic, podiatry, or dentistry in Iowa, or certified as a physician assistant as defined in Iowa Code section 148C.1, subsection 6, and is authorized to prescribe X-ray tests for the purpose of diagnosis or treatment.

"Licensee" means any person who is licensed by the agency in accordance with these rules and the Act.

"Licensing state" means any state with regulations equivalent to the suggested state regulations for control of radiation relating to, and an effective program for, the regulatory control of NARM and which has been granted final designation by the Conference of Radiation Control Program Directors, Inc.

"Light field" means that area of the intersection of the light beam from the beam-limiting device and one of the set of planes parallel to and including the plane of the image receptor, whose perimeter is the locus of points at which the illumination is one-fourth of the maximum in the intersection.

"Limits." See "Dose limits."

"Loose-fitting facepiece" means a respiratory inlet covering that is designed to form a partial seal with the face.

"Lost or missing licensed (or registered) source of radiation" means licensed (or registered) source of radiation whose location is unknown. This definition includes licensed (or registered) material that has been shipped but has not reached its planned destination and whose location cannot be readily traced in the transportation system.

"Lot tolerance percent defective" means, expressed in percent defective, the poorest quality in an individual inspection lot that should be accepted.

"Low dose-rate remote afterloader" means a brachytherapy device that remotely delivers a dose rate of less than or equal to 200 rads (2 gray) per hour at the point or surface where the dose is prescribed.

"mA" means milliampere.

"Major processor" means a user processing, handling, or manufacturing radioactive material exceeding Type A quantities as unsealed sources or material, or exceeding four times Type B quantities as sealed sources, but does not include nuclear medicine programs, universities, industrial radiographers, or small industrial programs. Type A and B quantities are defined in this rule.

"Mammography" means the radiography of the breast except as defined in 641—subrule 41.6(1).

"Mammography unit" means an assemblage of components for the production of X-rays for use during mammography, including, at a minimum: an X-ray generator, an X-ray control, a tube housing assembly, a beam-limiting device, and the supporting structures for these components.

"Manual brachytherapy" means a type of brachytherapy in which the brachytherapy sources (e.g., seeds, ribbons) are manually placed topically on or inserted either into the body cavities that are in close proximity to a treatment site or directly into the tissue volume.

"Medical use" means the intentional internal or external administration of radioactive material or the radiation therefrom to patients or human research subjects under the supervision of an authorized user.

"Medium dose-rate remote afterloader" means a brachytherapy device that remotely delivers a dose rate of greater than 200 rads (2 gray), but less than 1200 rads (12 gray) per hour at the point or surface where the dose is prescribed.

"Member of the public" means any individual except when that individual is receiving an occupational dose.

"Minor" means an individual less than 18 years of age.

"Misadministration" means the administration of:

Radiation doses received from linear accelerator therapy, deep X-ray machine therapy or superficial therapy; involving;

Administration of external beam radiation that results, or will result, in unintended permanent functional damage to an organ or a physiological system as determined by a physician.

A dose that differs from the prescribed dose by more than 5 rem (0.05 sievert) effective dose equivalent, 50 rem (0.5 sievert) to an organ or tissue, or 50 rem (0.5 sievert) shallow dose equivalent to the skin; and either:

(1) The total dose delivered differs from the prescribed dose by 20 percent or more; or

(2) The fractionated dose delivered differs from the prescribed dose for a single fraction by 50 percent or more.

A dose that exceeds 5 rem (0.05 sievert) effective dose equivalent, 50 rem (0.5 sievert) to an organ or tissue, or 50 rem (0.5 sievert) shallow dose equivalent to the skin from either of the following:

(1) An administration of the wrong treatment modality.

(2) An administration to the wrong patient or human research subject.

A dose to the skin or an organ or tissue other than the treatment site that exceeds by 50 rem (0.5 sievert) to an organ or tissue and 50 percent or more of the dose expected from the administration defined in the written directive.

"Monitoring (radiation monitoring, radiation protection monitoring)" means the measurement of radiation levels, radioactive material concentrations, surface area concentrations or quantities of radioactive material and the use of the results of these measurements to evaluate potential exposures and doses.

"NARM" means any naturally occurring or accelerator-produced radioactive material. It does not include by-product, source, or special nuclear material.

"Natural radioactivity" means radioactivity of naturally occurring nuclides. For the purpose of meeting the definition of a licensing state by the Conference of Radiation Control Program Directors, Inc., (CRCPD), NARM refers only to discrete sources of NARM. Diffuse sources of NARM are excluded from consideration by the CRCPD for licensing state designation purposes.

"Negative pressure respirator (tight fitting)" means a respirator in which the air pressure inside the facepiece is negative during inhalation with respect to the ambient air pressure outside the respirator.

"Nuclear Regulatory Commission (NRC)" means the U.S. Nuclear Regulatory Commission or its duly authorized representatives.

"Occupational dose" means the dose received by an individual in the course of employment in which the individual's assigned duties involve exposure to radiation or to radioactive material from licensed or unlicensed and registered or unregistered sources of radiation, whether in the possession of the licensee, registrant, or other person. Occupational dose does not include dose received from background radiation, from any medical administration the individual has received, from exposure to individuals administered sources of radiation or radioactive material and released in accordance with 641—subrule 41.2(27), from voluntary participation in medical research programs, or as a member of the public.

"Package" means the packaging together with its radioactive contents as presented for transport.

"Particle accelerator." See "Accelerator."

"Patient" means an individual or animal subjected to healing arts examination, diagnosis or treatment.

"Peak tube potential" means the maximum value of the potential difference across the X-ray tube during an exposure.

"Person" means any individual, corporation, partnership, firm, association, trust, estate, public or private institution, group, agency, political subdivision of this state, any other state or political subdivision or agency thereof, and any legal successor, representative, agent, or agency of the foregoing, but shall not include federal government agencies.

"Personnel monitoring equipment." See "Individual monitoring devices."

"Phantom" means a volume of material behaving in a manner similar to tissue with respect to the attenuation and scattering of radiation. This requires that both the atomic number (Z) and the density of the material be similar to that of tissue.

"Pharmacist" means an individual licensed by this state to compound and dispense drugs, prescriptions, and poisons.

"Physician" means a person who is currently licensed in Iowa to practice medicine and surgery, osteopathic medicine and surgery, or osteopathy.

"Positive pressure respirator" means a respirator in which the pressure inside the respiratory inlet covering exceeds the ambient air pressure outside the respirator.

"Positron emission tomography (PET) radionuclide production facility" means a facility operating a cyclotron or accelerator for the purpose of producing PET radionuclides.

"Powered air-purifying respirator (PAPR)" means an air-purifying respirator that uses a blower to force the ambient air through air-purifying elements to the inlet covering.

"Preceptor" means an individual who provides, directs, or verifies training and experience required for an individual to become an authorized user, an authorized medical physicist, an authorized nuclear pharmacist, or a radiation safety officer.

"Prescribed dosage" means the specified activity or range of activity of unsealed radioactive material as documented:

1. In a written directive; or
2. In accordance with the directions of the authorized user for procedures performed in 641—subrules 41.2(31) and 41.2(33).

"Prescribed dose" means:

1. For gamma stereotactic radiosurgery, the total dose as documented in the written directive;
2. For teletherapy, particle accelerators and X-ray therapy systems, the total dose and dose per fraction as documented in the written directive;
3. For manual brachytherapy, either the total source strength and exposure time or the total dose, as documented in the written directive; or
4. For remote brachytherapy afterloaders, the total dose and dose per fraction as documented in the written directive.

"Pressure demand respirator" means a positive pressure atmosphere-supplying respirator that admits breathing air to the facepiece when the positive pressure is reduced inside the facepiece by inhalation.

"Primary dose monitoring system" means a system which will monitor the useful beam during irradiation and which will terminate irradiation when a preselected number of dose monitor units have been delivered.

"Primary protective barrier" (see "Protective barrier").

"Principal activities," as used in this part, means activities authorized by the license which are essential to achieving the purpose(s) for which the license was issued or amended. Storage during which no licensed material is accessed for use or disposal and activities incidental to decontamination or decommissioning are not principal activities.

"Protective barrier" means a barrier used to reduce radiation exposure. The types of protective barriers are as follows:

1. *"Primary protective barrier"* means the material, excluding filters, placed in the useful beam.
2. *"Secondary protective barrier"* means a barrier sufficient to attenuate the stray radiation to the required degree.

"Public dose" means the dose received by a member of the public from exposure to radiation or to radioactive material released by a licensee, registrant, or other person, or to any other source of radiation under the control of a licensee, registrant, or other person. It does not include occupational dose or doses received from background radiation, from any medical administration the individual has received, from exposure to individuals administered sources of radiation or radioactive material and released under 641—subrule 41.2(27) or from voluntary participation in medical research programs.

"Pyrophoric material" means any liquid that ignites spontaneously in dry or moist air at or below 130° F (54.4° C) or solid, other than one classed as an explosive, which under normal conditions is liable to cause fires through friction, retained heat from manufacturing or processing, or which can be ignited readily and, when ignited, burns so vigorously and persistently as to create a serious transportation, handling, or disposal hazard. Included are spontaneously combustible and water-reactive materials.

"Qualified expert" means an individual having the knowledge and training to measure ionizing radiation, to evaluate safety techniques, and to advise regarding radiation protection needs. For example, individuals certified in the appropriate field by the American Board of Radiology, the American Board of Medical Physics, or the American Board of Health Physics, or those having equivalent qualifications. With reference to the calibration of radiation therapy equipment, an individual having, in addition to the above qualifications, training and experience in the clinical applications of radiation physics to radiation therapy, for example, individuals certified in Therapeutic Radiological Physics or X-Ray and Radium Physics by the American Board of Radiology, or those having equivalent qualifications.

"Qualitative fit test (QLFT)" means a pass-fail fit test to assess the adequacy of respirator fit that relies on the individual's response to the test agent.

"Quality factor" (Q) means the modifying factor, listed in Tables I and II of 38.4(4), that is used to derive dose equivalent from absorbed dose.

"Quantitative fit test (QNFT)" means an assessment of the adequacy of respirator fit by numerically measuring the amount of leakage into the respirator.

"Rad" means the special unit of absorbed dose. One rad is equal to an absorbed dose of 100 erg per gram or 0.01 joule per kilogram (0.01 gray).

"Radiation" means alpha particles, beta particles, gamma rays, X-rays, neutrons, high-speed electrons, high-speed protons, and other particles capable of producing ions. For purposes of these rules, ionizing radiation is an equivalent term. Radiation, as used in these rules, does not include nonionizing radiation, such as radiowaves or microwaves, visible, infrared, or ultraviolet light.

"Radiation area" means any area, accessible to individuals, in which radiation levels could result in an individual receiving a dose equivalent in excess of 0.05 mSv (0.005 rem) in 1 hour at 30 centimeters from the source of radiation or from any surface that the radiation penetrates.

"Radiation detector" means a device which, in the presence of radiation, by either direct or indirect means, provides a signal or other indication suitable for use in measuring one or more quantities of incident radiation.

"Radiation dose." See "Dose."

"Radiation machine" means any device capable of producing radiation except those devices with radioactive material as the only source of radiation.

"Radiation safety officer" means an individual who has the knowledge and responsibility to apply appropriate radiation protection regulations and has been assigned such responsibility by the licensee or registrant.

"Radioactive material" means any solid, liquid, or gas which emits radiation spontaneously.

"Radioactivity" means the transformation of unstable atomic nuclei by the emission of radiation.

"Radiobioassay." See "Bioassay."

"Radiographic imaging system" means any system whereby a permanent or semipermanent image is recorded on an image receptor by the action of ionizing radiation.

"Radionuclide" means a radioactive element or a radioactive isotope.

"Registrant" means any person who is registered with the agency or is legally obligated to register with the agency pursuant to these rules and the Act.

"Registration" means registration with the agency in accordance with the rules adopted by the agency.

"Regulations of the U.S. Department of Transportation" means the regulations in 49 CFR Parts 100-189.

"Rem" means the special unit of any of the quantities expressed as dose equivalent. The dose equivalent in rem is equal to the absorbed dose in rad multiplied by the quality factor (1 rem = 0.01 sievert).

"Reportable medical event" means the medical event, except for an event that results from patient intervention, in which the administration of by-product material or radiation from by-product material results in:

a. A dose that differs from the prescribed dose or dose that would have resulted from the prescribed dosage by more than 5 rem (0.05 Sv) effective dose equivalent, 50 rem (0.5 Sv) to an organ or tissue, or 50 rem (0.5 Sv) shallow dose equivalent to the skin; and

1. The total dose delivered differs from the prescribed dose by 20 percent or more;
2. The total dosage delivered differs from the prescribed dosage by 20 percent or more or falls outside the prescribed dosage range; or
3. The fractionated dose delivered differs from the prescribed dose, for a single fraction, by 50 percent or more.

b. A dose that exceeds 5 rem (0.05 Sv) effective dose equivalent, 50 rem (0.5 Sv) to an organ or tissue, or 50 rem (0.5 Sv) shallow dose equivalent to the skin from any of the following:

1. An administration of the wrong radioactive drug containing by-product material;
2. An administration of a radioactive drug containing by-product material by the wrong route of administration;
3. An administration of a dose or dosage to the wrong individual or human research subject;
4. An administration of a dose or dosage delivered by the wrong mode of treatment; or
5. A leaking sealed source.

c. A dose to the skin or an organ or tissue other than the treatment site that exceeds by 50 rem (0.5 Sv) to an organ or tissue and 50 percent or more of the dose expected from the administration defined in the written directive (excluding, for permanent implants, seeds that were implanted in the correct site but migrated outside the treatment site).

d. An event resulting from intervention of a patient or human research subject in which administration of by-product material or radiation from by-product material results or will result in unintended permanent functional damage to an organ or a physiological system, as determined by a physician.

"Research and development" means (1) theoretical analysis, exploration, or experimentation; or (2) the extension of investigative findings and theories of a scientific or technical nature into practical application for experimental and demonstration purposes, including the experimental production and testing of models, devices, equipment, materials, and processes. Research and development does not include the internal or external administration of radiation or radioactive material to human beings.

"Residual radioactivity" means radioactivity in structures, materials, soils, groundwater, and other media at a site resulting from activities under the licensee's control. This includes radioactivity from all licensed and unlicensed sources used by the licensee, but excludes background radiation. It also includes radioactive materials remaining at the site as a result of routine or accidental releases of radioactive material at the site and previous burials at the site, even if those burials were made in accordance with the provisions of 641—Chapter 40 or any previous state or federal licenses, rules or regulations.

"Restricted area" means an area, access to which is limited by the licensee or registrant for the purpose of protecting individuals against undue risks from exposure to sources of radiation. A restricted area shall not include any areas used for residential quarters, although a separate room or rooms in a residential building may be set apart as a restricted area.

"Roentgen" means the special unit of exposure. One roentgen (R) equals 2.58×10^{-4} coulombs/kilogram of air (see "Exposure" and 38.4(4)).

"Scattered radiation" means ionizing radiation emitted by interaction of ionizing radiation with matter, the interaction being accompanied by a change in direction of the radiation. Scattered primary

radiation means that scattered radiation which has been deviated in direction only by materials irradiated by the useful beam.

"Sealed source" means radioactive material that is encased in a capsule designed to prevent leakage or escape of the radioactive material.

"Secondary dose monitoring system" means a system which will terminate irradiation in the event of failure of the primary dose monitoring system.

"Secondary protective barrier" (see "Protective barrier").

"Self-contained breathing apparatus (SCBA)" means an atmosphere-supplying respirator for which the breathing air source is designed to be carried by the user.

"Shallow dose equivalent" (H_s), which applies to the external exposure of the skin of the whole body or the skin of an extremity, means the dose equivalent at a tissue depth of 0.007 centimeter (7 mg/cm^2).

"Shutter" means a device attached to the tube housing assembly which can intercept the entire cross-sectional area of the useful beam and which has a lead equivalency not less than that of the tube housing assembly.

"SI" means the abbreviation for the International System of Units.

"Sievert" means the SI unit of any of the quantities expressed as dose equivalent. The dose equivalent in sievert is equal to the absorbed dose in gray multiplied by the quality factor (1 Sv = 100 rem).

"Simulator (radiation therapy simulation system)" means any X-ray system intended for localizing the volume to be exposed during radiation therapy and reproducing the position and size of the therapeutic irradiation field.

"Site area emergency" means events may occur, are in progress, or have occurred that could lead to a significant release of radioactive material and that could require a response by off-site response organizations to protect persons off site.

"Site boundary" means that line beyond which the land or property is not owned, leased, or otherwise controlled by the licensee or registrant.

"Source" means the focal spot of the X-ray tube.

"Source material" means:

1. Uranium or thorium, or any combination thereof, in any physical or chemical form; or
2. Ores that contain by weight one-twentieth of 1 percent (0.05 percent) or more of uranium, thorium or any combination of uranium and thorium. Source material does not include special nuclear material.

"Source material milling" means any activity that results in the production of by-product material as defined by definition (2) of by-product material.

"Source of radiation" means any radioactive material or any device or equipment emitting, or capable of producing, radiation.

"Source traceability" means the ability to show that a radioactive source has been calibrated either by the national standards laboratory of the National Institute of Standards and Technology or by a laboratory which participates in continuing measurement quality assurance programs with the National Institute of Standards and Technology or other equivalent national or international program.

"Special form radioactive material" means radioactive material which satisfies the following conditions:

1. It is either a single solid piece or is contained in a sealed capsule that can be opened only by destroying the capsule;
2. The piece or capsule has at least one dimension not less than 5 millimeters (0.2 inch); and
3. It satisfies the test requirements specified by the U.S. Nuclear Regulatory Commission. A special form encapsulation designed in accordance with the U.S. Nuclear Regulatory Commission requirements in effect on June 30, 1983, and constructed prior to July 1, 1985, may continue to be used. A special form encapsulation either designed or constructed after June 30, 1985, must meet requirements of this definition applicable at the time of its design or construction.

"Special nuclear material" means:

1. Plutonium, uranium-233, uranium enriched in the isotope 233 or in the isotope 235, and any other material that the agency declares by order to be special nuclear material after the U.S. Nuclear Regulatory Commission, pursuant to the provisions of Section 51 of the Atomic Energy Act of 1954, as amended, determines to be special nuclear material, but does not include source material; or

2. Any material artificially enriched by any of the foregoing but does not include source material.

"Special nuclear material in quantities not sufficient to form a critical mass" means uranium enriched in the isotope U-235 in quantities not exceeding 350 grams of contained U-235; uranium-233 in quantities not exceeding 200 grams; plutonium in quantities not exceeding 200 grams; or any combination of them in accordance with the following formula: For each kind of special nuclear material, determine the ratio between the quantity of that special nuclear material and the quantity specified above for the same kind of special nuclear material. The sum of such ratios for all of the kinds of special nuclear material in combination shall not exceed 1. For example, the following quantities in combination would not exceed the limitation and are within the formula:

$$\frac{175 \text{ (grams contained U-235)}}{350} + \frac{50 \text{ (grams U-233)}}{200} + \frac{50 \text{ (grams Pu)}}{200} = 1$$

"SSD" means the distance between the source and the skin entrance plane of the patient (see "Target-to-skin distance (TSD)").

"Stray radiation" means the sum of leakage and scattered radiation.

"Supplied-air respirator (SAR)" or *"airline respirator"* means an atmosphere-supplying respirator for which the source of breathing air is not designed to be carried by the user.

"Survey" means an evaluation of the radiological conditions and potential hazards incident to the production, use, transfer, release, disposal, or presence of sources of radiation. When appropriate, such evaluation includes a physical survey of the location of radioactive material and measurements or calculations of levels of radiation or concentrations or quantities of radioactive material present.

"Target-to-skin distance (TSD)" means the distance measured along the beam axis from the center of the front surface of the X-ray target or electron virtual source scattering foil to the surface of the irradiated object or patient.

"Teletherapy" means therapeutic irradiation in which the source of radiation is at a distance from the body.

"Termination of irradiation" means the stopping of irradiation in a fashion which will not permit continuance of irradiation without the resetting of operating conditions at the control panel.

"Test" means the process of verifying compliance with an applicable regulation.

"These rules" means 641—Chapters 38 to 45.

"Tight-fitting facepiece" means a respirator inlet covering that forms a complete seal with the face.

"Total effective dose equivalent" (TEDE) means the sum of the effective dose equivalent (for external exposures) and the committed effective dose equivalent (for internal exposures).

"Total organ dose equivalent" (TODE) means the sum of the deep dose equivalent and the committed dose equivalent to the organ receiving the highest dose as described in 641—40.86(1)*"f."*

"Traceable to a national standard." See "Instrument traceability" or "Source traceability."

"Treatment site" means the anatomical description of the tissue intended to receive a radiation dose, as described in the written directive.

"Tube" means an X-ray tube unless otherwise specified. See "X-ray tube."

"Tube housing assembly" means the tube housing with tube installed. It includes high-voltage or filament transformers, or both, and other appropriate elements when such are contained within the tube housing.

"Type A quantity" means a quantity of radioactive material, the aggregate radioactivity of which does not exceed A_1 for special form radioactive material, or A_2, for normal form radioactive material as defined in 10 CFR 71.4.

"Type B quantity" means a quantity of radioactive material greater than a Type A quantity as defined in 10 CFR 71.4.

"Unrefined and unprocessed ore" means ore in its natural form prior to any processing, such as grinding, roasting, beneficiating, or refining. Processing does not include sieving or encapsulation of ore or preparation of samples for laboratory analysis.

"Unrestricted area" means an area to which access is neither limited nor controlled by the licensee or registrant. For purposes of these rules, "uncontrolled area" is an equivalent term.

"U.S. Department of Energy" means the Department of Energy established by Public Law 95-91, August 4, 1977, 91 Stat. 565, 42 U.S.C. 7101 et seq., to the extent that the department exercises functions formerly vested in the U.S. Atomic Energy Commission, its chairman, members, officers and components and transferred to the U.S. Energy Research and Development Administration and to the administrator thereof pursuant to Sections 104(b), (c) and (d) of the Energy Reorganization Act of 1974 (Public Law 93-438, October 11, 1974, 88 Stat. 1233 at 1237, effective January 19, 1975) and retransferred to the Secretary of Energy pursuant to Section 301(a) of the Department of Energy Organization Act (Public Law 95-91, August 4, 1977, 91 Stat. 565 at 577-578, 42 U.S.C. 7151, effective October 1, 1977).

"User seal check (fit check)" means an action conducted by the respirator user to determine if the respirator is properly seated to the face. Examples include negative pressure check, positive pressure check, irritant smoke check, or isoamyl acetate check.

"Very high radiation area" means an area, accessible to individuals, in which radiation levels from radiation sources external to the body could result in an individual's receiving an absorbed dose in excess of 500 rad (5 Gy) in 1 hour at 1 meter from a source of radiation or 1 meter from any surface that the radiation penetrates.

"Waste" means those low-level radioactive wastes containing source, special nuclear, or by-product material that are acceptable for disposal in a land disposal facility. For the purposes of this definition, low-level radioactive waste means radioactive waste not classified as high-level radioactive waste, transuranic waste, spent nuclear fuel, or by-product material as defined in paragraphs "2," "3" and "4" of the definition of "by-product material" set forth in this chapter.

"Waste handling licensees" means persons licensed to receive and store radioactive wastes prior to disposal or persons licensed to dispose of radioactive waste.

"Wedge filter" means an added filter effecting continuous progressive attenuation on all or part of the useful beam.

"Week" means seven consecutive days starting on Sunday.

"Whole body" means, for purposes of external exposure, head, trunk including male gonads, arms above the elbow, or legs above the knee.

"Worker" means an individual engaged in work under a license or registration issued by the agency and controlled by a licensee or registrant, but does not include the licensee or registrant.

"Working level" (WL) means any combination of short-lived radon daughters in 1 liter of air that will result in the ultimate emission of 1.3E+5 MeV of potential alpha particle energy. The short-lived radon daughters are—for radon-222: polonium-218, lead-214, bismuth-214, and polonium-214; and for radon-220: polonium-216, lead-212, bismuth-212, and polonium-212.

"Working level month" (WLM) means an exposure to 1 working level for 170 hours—2,000 working hours per year divided by 12 months per year is approximately equal to 170 hours per month.

"Written directive" means an order in writing for a specific patient or human research subject, dated and signed by an authorized user prior to the administration of a radiopharmaceutical or by an individual qualified by training and experience to conduct particle accelerator therapy or radiation for X-ray therapy, as specified in 641—subrule 41.2(87).

"X-radiation" means penetrating electromagnetic radiation with energy greater than 0.1 kV produced by bombarding a metallic target with fast electrons in a high vacuum.

"X-ray tube" means any electron tube which is designed to be used primarily for the production of X-rays.

"Year" means the period of time beginning in January used to determine compliance with the provisions of these rules. The licensee or registrant may change the starting date of the year used to

determine compliance by the licensee or registrant provided that the change is made at the beginning of the year and that no day is omitted or duplicated in consecutive years.
[**ARC 8982B**, IAB 8/11/10, effective 9/15/10; **ARC 1639C**, IAB 10/1/14, effective 11/5/14]

641—38.3(136C) Exemptions from the regulatory requirements.

38.3(1) *General provision.* The agency may, upon application therefor or upon its own initiative, grant such exemptions or exceptions from the requirements of the rules in 641—Chapters 38 to 46 as it determines are authorized by law and will not result in undue hazard to public health and safety or property. Application for exemptions or exceptions should be made in accordance with 641—Chapter 178.

38.3(2) *Persons using by-product material under certain Department of Energy and Nuclear Regulatory Commission contracts.*

a. Except to the extent that NRC facilities or activities of the types subject to licensing pursuant to the Energy Reorganization Act of 1974 are involved, any prime contractor of the NRC is exempt from the license requirements of these rules and from the regulations of these rules to the extent that such contractor, under the contractor's prime contract with the NRC, manufactures, produces, transfers, receives, acquires, owns, possesses, or uses by-product material for:

(1) The performance of work for a department at the United States government-owned or government-controlled site, including the transportation of by-product material to or from such site and the performance of contract services during temporary interruptions of such transportation;

(2) Research in, or development, manufacture, storage, testing or transportation of, atomic weapons or components thereof; or

(3) The use or operation of nuclear reactors or other nuclear devices in a United States government-owned vehicle or vessel.

b. In addition to the foregoing exemptions and subject to the requirement for licensing of NRC facilities and activities pursuant to the requirements of the Energy Reorganization Act of 1974, any prime contractor or subcontractor of the NRC is exempt from the requirements for a license set forth in the Act and from the regulations in these rules to the extent that such prime contractor or subcontractor manufactures, produces, transfers, receives, acquires, owns, possesses, or uses by-product material under the contractor's or subcontractor's prime contract or subcontract when the NRC determines that the exemption of the prime contractor or subcontractor is authorized by law; and that, under the terms of the contract or subcontract, there is adequate assurance that the work can be accomplished without undue risk to the public health and safety.

c. Carriers. Common and contract carriers, freight forwarders, warehousemen, and the U.S. Postal Service are exempt from these rules to the extent that they transport or store radioactive material in the regular course of carriage for another or of storage incident thereto.

641—38.4(136C) General regulatory requirements.

38.4(1) *Records.*

a. Each licensee and registrant shall maintain records showing the receipt, transfer, and disposal of all sources of radiation. Additional record requirements are specified elsewhere in these rules.

b. Electronic records.

(1) A record or signature shall not be denied legal effect or enforceability solely because it is in electronic form.

(2) A contract shall not be denied legal effect or enforceability solely because an electronic record was used in its formation.

(3) If a rule requires a record to be in writing, an electronic record shall satisfy the rule.

(4) If a rule requires a signature, an electronic signature shall satisfy the rule.

38.4(2) *Inspections.*

a. Each licensee and registrant shall afford the agency at all reasonable times opportunity to inspect sources of radiation and the premises and facilities wherein such sources of radiation are used or stored.

b. Each licensee and registrant shall make available to the agency for inspection, upon reasonable notice, records maintained pursuant to these rules.

38.4(3) *Tests.* Each licensee and registrant shall perform upon instructions from the agency, or shall permit the agency to perform, such reasonable tests as the agency deems appropriate or necessary including, but not limited to, tests of:

a. Sources of radiation;

b. Facilities wherein sources of radiation are used or stored;

c. Radiation detection and monitoring instruments; and

d. Other equipment and devices used in connection with utilization or storage of licensed or registered sources of radiation.

38.4(4) *Units of exposure and dose.*

a. As used in these rules, the quality factors for converting absorbed dose to dose equivalent are shown in Table I.

TABLE I

QUALITY FACTORS AND ABSORBED DOSE EQUIVALENCIES

TYPE OF RADIATION	Quality Factor (Q)	Absorbed Dose Equal to a Unit Dose Equivalent (see footnote "1")
X, gamma, or beta radiation and high-speed electrons	1	1
Alpha particles, multiple-charged particles, fission fragments and heavy particles of unknown charge	20	0.05
Neutrons of unknown energy	10	0.1
High-energy protons	10	0.1

1. Absorbed dose in rad equal to 1 rem or the absorbed dose in gray equal to 1 sievert.

b. If it is more convenient to measure the neutron fluence rate than to determine the neutron dose equivalent rate in sievert per hour or rem per hour, as provided in 38.4(4)*"a,"* 1 rem (0.01 Sv) of neutron radiation of unknown energies may, for purposes of these rules, be assumed to result from a total fluence of 25 million neutrons per square centimeter incident upon the body. If sufficient information exists to estimate the approximate energy distribution of the neutrons, the licensee or registrant may use the fluence rate per unit dose equivalent or the appropriate Q value from Table II to convert a measured tissue dose in gray or rad to dose equivalent in sievert or rem.

TABLE II

MEAN QUALITY FACTORS, Q, AND FLUENCE PER UNIT DOSE EQUIVALENT FOR MONOENERGETIC NEUTRONS

	Neutron Energy (MeV)	Quality Factor[a] (Q)	Fluence per Unit Dose Equivalent[b] (neutrons cm^{-2} rem^{-1})	Fluence per Unit Dose Equivalent[b] (neutrons cm^{-2} Sv^{-1})
(thermal)	2.5E–8	2	980E+6	980E+8
	1E–7	2	980E+6	980E+8
	1E–6	2	810E+6	810E+8
	1E–5	2	810E+6	810E+8
	1E–4	2	840E+6	840E+8
	1E–3	2	980E+6	980E+8
	1E–2	2.5	1010E+6	1010E+8

Neutron Energy (MeV)	Quality Factor[a] (Q)	Fluence per Unit Dose Equivalent[b] (neutrons cm^{-2} rem^{-1})	Fluence per Unit Dose Equivalent[b] (neutrons cm^{-2} Sv^{-1})
1E–1	7.5	170E+6	170E+8
5E–1	11	39E+6	39E+8
1	11	27E+6	27E+8
2.5	9	29E+6	29E+8
5	8	23E+6	23E+8
7	7	24E+6	24E+8
10	6.5	24E+6	24E+8
14	7.5	17E+6	17E+8
20	8	16E+6	16E+8
40	7	14E+6	14E+8
60	5.5	16E+6	16E+8
1E+2	4	20E+6	20E+8
2E+2	3.5	19E+6	19E+8
3E+2	3.5	16E+6	16E+8
4E+2	3.5	14E+6	14E+8

[a]Value of quality factor (Q) at the point where the dose equivalent is maximum in a 30-centimeter diameter cylinder tissue-equivalent phantom.
[b]Monoenergetic neutrons incident normally on a 30-centimeter diameter cylinder tissue-equivalent phantom.

38.4(5) *Units of activity.* Rescinded IAB 4/8/98, effective 7/1/98.

38.4(6) *Additional requirements.* The agency may, by rule, regulation, or order, impose upon any licensee or registrant such requirements in addition to those established in these rules as it deems appropriate or necessary to minimize danger to public health and safety or property.

641—38.5(136C) Administrative actions. Rescinded IAB 4/3/02, effective 5/8/02.

641—38.6(136C) Prohibited uses. A hand-held fluoroscopic screen shall not be used with X-ray equipment unless it has been accepted for certification by the U.S. Food and Drug Administration, Center for Devices and Radiological Health. A shoe-fitting fluoroscopic device shall not be used. Radiation from radiation-emitting machines or radioactive materials shall not be used on humans for nonmedical purposes.

641—38.7(136C) Communications.

38.7(1) All communications and reports concerning these rules, and applications filed thereunder, should be addressed to the agency at its office located at the Iowa Department of Public Health, Bureau of Radiological Health, Lucas State Office Building, 5th Floor, Des Moines, Iowa 50319.

38.7(2) Drafts of proposed regulations released to the department from the federal government which constitute essential information needed by the department to ensure compliance with federal regulations are not available for public examination. Therefore, pursuant to Iowa Code section 22.9, the department waives the provision of Iowa Code section 22.2 as it applies to these proposed draft regulations.

641—38.8(136C) Fees.

38.8(1) *Radiation machines.*

a. Each registrant shall, at the time of registration and the anniversary date thereafter, as long as the registrant owns the radiation machine, remit to the agency a nonrefundable fee sufficient to defray the cost of registering the equipment with the department. All fees shall be paid annually in the form of a check or money order made payable to the Iowa Department of Public Health. The fees to be paid shall be in the amount computed by the following schedule:

ANNUAL FEE SCHEDULE

Type of X-ray machine	Fee per tube	Maximum fee
1. Medical	$51	$1500
2. Osteopathy	$51	$1500
3. Chiropractic	$51	$1500
4. Dentistry	$39	$1000
5. Podiatry	$39	$1000
6. Veterinary Medicine	$25	–
7. (Industrial/Nonmedical Use)	$50	–
8. Food Sterilization	$1000	–
9. Accelerators and Electronic Brachytherapy Units	$100	–
10. Electron Microscope	$20	–
11. Bone Densitometry	$25	–

Fees for radiation machines not listed in the above schedule shall not be less than $50 per unit/tube.

b. Each registrant shall, where appropriate, pay the following special inspections/interpretation fee at the written request of the department:

(1) Mammography unit inspections fees:

- $900 for the first unit and, if the facility has additional units at the address of the first unit, a fee of $325 for each additional unit; or
- $900 per portable unit for each site where the unit is off-loaded and used and where the processing and patient films are stored; or
- Dollar amount to be determined and justified by the department on a case-by-case basis for facilities which do not meet the above criteria; or
- $450 for the second facility follow-up visit to review or determine the corrective action taken to address noncompliances; or
- $900 for each stereotactic breast biopsy unit.

(2) Mammography interpretation fees of $100 per mammography examination provided to the department for the purpose of determining film diagnostic quality.

(3) Industrial and oncology accelerator registrants and electronic brachytherapy registrants shall pay for each inspection a fee of $400 for the first unit and $100 for each additional unit.

(4) Industrial radiography X-ray units/walk-in cabinet radiography X-ray unit registrants shall pay for each inspection a fee of $250 for the first unit and $75 for each additional unit.

c. Each person who is engaged in the business of installing or offering to furnish radiation machines or is engaged in the business of furnishing or offering to furnish radiation machine servicing or service in the state shall apply for registration of such service with the agency prior to furnishing or offering to furnish any such service. Application shall be on a form provided by the department and include an annual nonrefundable fee of $100.

d. Each person engaged in providing health physics services in mammography in Iowa, who meets the requirements of 641—paragraph 41.6(3)*"c"* and is deemed qualified by this agency, must submit a $40 annual listing fee to this agency.

e. All mammography facilities providing services in Iowa must submit a $50 annual authorization certification fee.

f. All Iowa-accredited facilities providing mammography services in Iowa must submit a $200 accreditation fee for initial accreditation and each reaccreditation.

38.8(2) *Radioactive material fee schedule.* Fees associated with the possession and use of radioactive materials in Iowa shall not exceed those specified in 10 CFR 170.31 and 10 CFR 171.16. The following fee schedule shall apply.

	Program Code	Category	Type	New License Fee	Inspection Priority	Annual Fee
(3.L.)	01100	AAB	Academic Type A Broad	$5,000	1	$10,500
(8.A.)	03710	CD	Civil Defense	$1,000	5	$1,000
(3.E.)	03510	I1	Irradiators, Self-Shielding <10,000 Curies	$2,000	5	$650
(3.O.)	03320	IR1	Industrial Radiography – Temporary Job Sites	$4,500	1	$4,300
(3.P.)	03120	FG	Measuring Systems – Fixed Gauge	$1,300	5	$650
(3.P.)	03121	PG	Measuring Systems – Portable Gauge	$1,300	5	$650
(3.P.)	02410	IVL	*In-Vitro* Testing Laboratory	$1,300	5	$650
(7.C.)	02230	HDR	High Dose Rate Afterloader	$2,300	1	$3,400
(7.C.)	02120	M1	Medical – Diagnostic & Therapy	$2,300	3	$1,500
(7.C.)	02121	M2	Medical – Diagnostic Only	$2,300	4	$1,200
(7.C.)	02240	MET	Medical – Diagnostic, Therapeutic, Emerging Technologies	$2,300	2	$2,000
(3.S.)	03210	PET	Accelerator-Produced RAM	$3,000	1	$4,300
(3.C.)	02500	NP	Nuclear Pharmacy	$3,000	1	$3,500
(7.C.)	02231	NV1	Nuclear Medical Van	$2,300	2	$1,800
(7.C.)	22160	PMM	Pacemaker – By-Product and/or SNM	$2,300	T	Note 5
(3.M.)	03620	RD2	Research & Development – Other	$2,500	3	$1,350
(2.C.)	11300	SM1	Source Material, Other, >150 Kilograms	$6,000	3	$2,250
(1.D.)	22120	SNM2	SNM Plutonium – Neutron Source	$1,500	5	$500
(3.P.)	03221	CAL	Calibration and W/L Tests	$1,300	5	$650
(3.P.)	03122	XRF	X-Ray Fluorescent Analyzer	$1,300	7	$650
(3.P.)	02400	VMT	Veterinary Medicine – Therapy	$1,300	3	$650
(3.B.)	03214	MD	Manufacturing/Distribution	$3,500	3	$1,800

Notes:

1. Reciprocity fee is $1,800 annually (180 days).
2. Inspection priorities are based on NRC inspection manual chapter 2800. Priority "T" is a telephonic contact and is not considered an inspection.
3. License amendment fee for all categories is $400.
4. Annual fees are due no later than September 1 of each year. A 10% late charge will be assessed per month for late payments. Licensees with more than two authorized locations of use will be charged an additional 10% of the annual fee per location.
5. Separate annual fees will not be assessed for pacemaker licenses issued to medical institutions that also hold nuclear medicine licenses with the agency.
6. General license registration fee is $250 annually on registration anniversary.

38.8(3) *Industrial radiography testing and certification.*

a. A nonrefundable fee of $175 shall be submitted with each application for taking an industrial radiography examination to become certified by the agency.

b. A fee of $25 shall be submitted in order to replace lost identification cards issued to industrial radiographers by the agency pursuant to 641—subrule 45.1(10).

c. A nonrefundable fee of $75 shall be submitted with each application, not associated with an agency-administered industrial radiography examination, for a trainee or trainer card issued to a radiographer's assistant or an industrial radiographer.

38.8(4) *Owner-assessed expenses.* In cases in which the agency determines that the cost of regulating or inspecting registered radiation machine facilities or radioactive materials licensees significantly exceeds the fees charged to the facility, it may assess an additional fee to the owner or user of the source(s) of radiation to cover the actual expenses incurred by the agency.

38.8(5) *Environmental surveillance fee.* A fee may be levied against any licensee, registrant, corporation, company, business, or individual for environmental surveillance activities which are necessary to assess the radiological impact of activities conducted by the licensee, registrant, corporation, company, business, or individual. This fee shall be sufficient to defray actual costs incurred by the agency, including, but not limited to, salaries of agency employees, per diem, travel, and costs of laboratory analysis of samples, when required.

38.8(6) *Certification fees.* Rescinded IAB 2/6/13, effective 3/13/13.

38.8(7) *Returned check and late fees.* Persons who fail to pay required fees to the agency are subject to the following penalties:

a. $25 for each payment received by the agency in accordance with these rules, for which insufficient funds are available to fulfill the obligation of such payment to the agency.

b. $25 for each month for failure to pay any fee administered by this agency starting 30 days after the due date of the original notice. This fee is added to the unpaid fee.

38.8(8) *Reciprocity.* Fees paid for reciprocal recognition of out-of-state persons wishing to utilize radiation machines or radioactive materials in Iowa shall allow the out-of-state person to operate for a total of 180 days during the 365-day reciprocity period starting the date the fee is received by the agency.

a. Radiation machines. Any out-of-state person who wishes to bring an X-ray machine or linear accelerators into the state to perform work or services shall pay a reciprocity fee of $100 for each source of radiation.

b. Radioactive materials. Out-of-state persons wishing to bring sources of radioactive material into Iowa for business purposes may be subject to a reciprocity fee depending on the type of activity to be performed and the type of radioactive materials license possessed (refer to 641—subrule 39.4(90)). If a reciprocity fee is applicable, it shall be assessed at the rate for reciprocity specified in the radioactive materials fee schedule available through the agency for each 365-day reciprocity period. In addition, if the agency performs an inspection of the out-of-state person's activities while in Iowa, the appropriate inspection fee as specified in the radioactive materials fee schedule will be assessed.

c. Industrial radiographers wishing to operate in Iowa under an identification card from a jurisdiction recognized by Iowa that charges Iowa card holders a fee will be assessed and must pay a $100 fee prior to conducting industrial radiography in Iowa.

38.8(9) *Radon certification.* Rescinded IAB 4/3/02, effective 5/8/02.

38.8(10) *Radon mitigation credentialing.* Rescinded IAB 4/3/02, effective 5/8/02.

38.8(11) *Radioactive material transport fee schedule.*

a. All shippers shall pay the following fee(s) unless the department obtains sufficient funding from another source, which may include but is not limited to a federal agency or a contract with a shipper.

(1) $1800 per highway cask for each truck shipment of spent nuclear fuel, high-level radioactive waste, transuranic waste, or highway route controlled quantity of radioactive materials or any material shipped in accordance with rule 641—37.77(136C) traversing the state or any portion thereof. Single cask truck shipments are subject to a surcharge of $20 per mile for every mile over 250 miles traveled.

(2) $1300 for the first cask and $125 for each additional cask for each rail shipment of spent nuclear fuel, high-level radioactive waste, transuranic waste, or any material shipped in accordance with rule 641—37.77(136C) traversing the state or any portion thereof.

(3) $175 for each shipment by truck or by rail paid by the shipper for low-level radioactive waste shipped in or across Iowa. The department may accept an annual shipment fee as negotiated with a shipper or accept payment per shipment. This fee applies to waste shipped to a site authorized by a government agency to receive low-level radioactive waste or shipped to a storage site to be held for future disposal.

b. All fees must be paid by the shipper prior to shipment. Shippers must request an application for a permit to ship radioactive material from the Iowa Department of Transportation, Office of Motor Carrier Services. Assistance may be obtained by calling the Bureau of Radiological Health at (515)281-3478. Other methods of fee payment may be considered by the department on a case-by-case basis upon request of the shipper. A request for an alternative method of payment must be made to the department prior to shipment.

c. All fees received pursuant to this subrule shall be used for purposes related to transporting radioactive material, including enforcement and planning, developing, and maintaining a capability for emergency response.

38.8(12) *Fee waiver.* Any fee may be waived in exchange for services (low-level waste disposal, radiation detection instrument calibration, instrument repair, sample analysis, etc.) provided to the agency. The waiver may only occur as a result of a 28E agreement between the parties.

[**ARC 8982B**, IAB 8/11/10, effective 9/15/10; **ARC 0577C**, IAB 2/6/13, effective 3/13/13; **ARC 1479C**, IAB 6/11/14, effective 7/16/14]

641—38.9(136C) Administrative enforcement actions.

38.9(1) *Scope.*

a. This rule prescribes the procedure in cases initiated by the staff, or upon a request by any person, to impose requirements by order, or to modify, suspend, or revoke a license, registration, or certificate or to take other action as may be proper against any person subject to the jurisdiction of the agency. The term "regulated entity" as used in this rule refers to any facility, person, partnership, corporation or other organization which is regulated by the agency by virtue of these rules, the Iowa Code, licensing documents, registrations, certificates, or other official regulatory promulgation. "Authorization" means license, registration, certificate, permit, or any other document issued or received by the agency that authorizes specific activities related to the possession and use of radioactive materials or radiation-producing machines in Iowa.

b. This rule also prescribes the procedures in cases initiated by the staff to impose civil penalties pursuant to Iowa Code section 136C.4, to impose serious misdemeanor penalties pursuant to Iowa Code section 136B.5 or to impose simple misdemeanor penalties pursuant to Iowa Code section 136D.8.

38.9(2) *Notice of violation.*

a. In response to an alleged violation of any provision of the Iowa Code, these rules, the conditions of an authorization issued by the agency or any order issued by the agency, the agency may serve on the regulated entity a written notice of violation; a separate notice may be omitted if an order pursuant to 38.9(3) or demand for information pursuant to 38.9(5) is issued that otherwise identifies the apparent violation. The notice of violation will concisely state the alleged violation(s) and will require that the regulated entity submit, within 30 days of the date of the notice or other specified time, a written explanation or statement in reply including:

(1) Corrective steps which have been taken by the regulated entity and the results achieved;

(2) Corrective action which will be taken to prevent recurrence; and

(3) The date when full compliance will be achieved.

b. The notice may require the regulated entity subject to the jurisdiction of the agency to admit or deny the violation and to state the reasons for the violation, if admitted. It may provide that, if an adequate reply is not received within the time specified in the notice, the agency may issue an order or

a demand for information as to why the authorization should not be modified, suspended, or revoked or why such other action as may be proper should not be taken.

c. Violations are categorized according to five levels of severity, which are:

(1) Severity Levels I and II: Violations are of very significant regulatory concern involving actual or high potential impact on the public health and safety.

(2) Severity Level III: Violations are cause for significant concern.

(3) Severity Level IV: Violations are less serious but are of more than minor concern and that, if left uncorrected, could lead to a more serious health and safety concern.

(4) Severity Level V: Violations are of minor safety or environmental concern.

d. A group of violations may be evaluated in the aggregate and assigned a single higher severity level if the violations have the same underlying cause or if the violations contributed to or were unavoidable consequences of the underlying problem.

e. The severity level of a violation may be increased if the violation can be considered a repetitive violation. The term "repetitive violation" or "similar violation" means a violation that reasonably could have been prevented by a regulated entity's corrective action for a previous violation normally occurring within the past two years of the inspection at issue or the period within the last two inspections, whichever is longer.

f. The severity level of a violation may be increased if the violation involves casual disregard of requirements, deception, or other indications of willfulness. The term "willfulness" is that characteristic of violations ranging from deliberate intent to violate or falsify to intentional disregard for regulatory requirements.

38.9(3) *Orders.*

a. The agency may institute a proceeding to modify, suspend, or revoke an authorization or to take other action as may be proper by serving on the regulated entity an order which will:

(1) Allege the violations with which the regulated entity is charged, or the potentially hazardous conditions or other facts deemed to be sufficient grounds for the proposed action;

(2) Provide that the regulated entity may file a written answer to the order under oath or affirmation within 20 days of its date, or such other time as may be specified in the order;

(3) Inform the regulated entity of its right, within 20 days of the date of the order, or such other time as may be specified in the order, to demand a hearing on all or part of the order, except in a case where the regulated entity has consented in writing to the order;

(4) Specify the issues for hearing; and

(5) State the effective date of the order; if the agency finds that the public health, safety, or interest so requires or that the violation or conduct causing the violation is willful, the order may provide, for stated reasons, that the proposed action be immediately effective pending further order.

b. A regulated entity who receives an order may respond to an order under this subrule by filing a written answer under oath or affirmation. The answer shall specifically admit or deny each allegation or charge made in the order and may set forth the matters of fact and law on which the regulated entity relies, and, if the order is not consented to, the reasons as to why the order should not have been issued. Except as provided in paragraph *"d"* of this subrule, the answer may demand a hearing.

c. If the answer demands a hearing, the agency will issue an order designating the time and place of hearing.

d. An answer or stipulation may consent to the entry of an order in substantially the form proposed in the order with respect to all or some of the actions proposed in the order. The consent, in the answer or other written document, of the regulated entity to whom the order has been issued shall constitute a waiver by the regulated entity of a hearing, findings of fact and conclusions of law, and of all right to seek agency and judicial review or to contest the validity of the order in any forum as to those matters which have been consented to or agreed to or on which a hearing has not been requested. An order that has been consented to shall have the same force and effect as an order made after hearing by a presiding officer or the agency, and shall be effective as provided in the order.

38.9(4) *Settlement and compromise.* At any time after the issuance of an order designating the time and place of hearing in a proceeding to modify, suspend, or revoke an authorization, the staff and a

regulated entity may enter into a stipulation for the settlement of the proceeding or the compromise of a civil penalty.

38.9(5) *Demand for information.*

a. The agency may issue to a regulated entity a demand for information for the purpose of determining whether an order under 38.9(3) should be issued, or whether other action should be taken, which demand will:

(1) Allege the violations with which the regulated entity is charged, or the potentially hazardous conditions or other facts deemed to be sufficient ground for issuing the demand; and

(2) Provide that the regulated entity must file a written answer to the demand for information under oath or affirmation within 20 days of its date, or such time as may be specified in the demand for information.

b. A regulated entity to whom the agency has issued a demand for information under this subrule must respond to the demand by filing a written answer under oath or affirmation. The regulated entity's answer shall specifically admit or deny each allegation or charge made in the demand for information, and shall set forth the matters of fact and law on which the licensee relies. A person other than a licensee may answer as described above, or by setting forth its reasons why the demand should not have been issued and, if the requested information is not provided, the reasons why it is not provided.

c. Upon review of the answer filed pursuant to 38.9(5)*"a"*(2), or if no answer is filed, the agency may institute a proceeding pursuant to 38.9(3) to take such action as may be proper.

d. An answer may consent to the entry of an order pursuant to 38.9(3) in substantially the form proposed in the demand for information. Such consent shall constitute a waiver as provided in 38.9(3)*"d."*

38.9(6) *Civil penalties.*

a. Before instituting any proceeding to impose a civil penalty under Iowa Code section 136C.4, the agency shall serve a written notice of violation upon the person charged. This notice may be included in a notice issued pursuant to 38.9(2). The notice of violation shall specify the date or dates, facts, and the nature of the alleged act or omission with which the person is charged and shall identify specifically the particular provision or provisions of the law, rule, regulation, license, permit, or cease and desist order involved in the alleged violation and must state the amount of each proposed penalty. The notice of violation shall also advise the person charged that the civil penalty may be paid in the amount specified therein, or the proposed imposition of the civil penalty may be protested in its entirety or in part, by a written answer, either denying the violation or showing extenuating circumstances. The notice of violation shall advise the person charged that upon failure to pay a civil penalty subsequently determined by the agency, if any, unless compromised, remitted, or mitigated, the fee shall be collected by civil action, pursuant to Iowa Code section 136C.4.

b. Within 20 days of the date of a notice of violation or other time specified in the notice, the person charged may either pay the penalty in the amount proposed or answer the notice of violation. The answer to the notice of violation shall state any facts, explanations, and arguments denying the charges of violation, or demonstrating any extenuating circumstances, error in the notice of violation, or other reason why the penalty should not be imposed and may request remission or mitigation of the penalty.

c. If the person charged with violation fails to answer within the time specified in 38.9(6)*"b,"* an order may be issued imposing the civil penalty in the amount set forth in the notice of violation described in 38.9(6)*"a."*

d. If the person charged with violation files an answer to the notice of violation, the agency, upon consideration of the answer, will issue an order dismissing the proceeding or imposing, mitigating, or remitting the civil penalty. The person charged may, within 20 days of the date of the order or other time specified in the order, request a hearing.

e. If the person charged with violation requests a hearing, the agency will issue an order designating the time and place of hearing.

f. If a hearing is held, an order will be issued after the hearing by the presiding officer or the agency dismissing the proceeding or imposing, mitigating, or remitting the civil penalty.

g. The agency may compromise any civil penalty, subject to the provisions of 38.9(4).

h. If the civil penalty is not compromised, or is not remitted by the presiding officer or the agency, and if payment is not made within ten days following either the service of the order described in 38.9(6)*"c"* or *"f,"* or the expiration of the time for requesting a hearing described in 38.9(6)*"d,"* the agency may refer the matter to the attorney general for collection.

i. Except when payment is made after compromise or mitigation by the Department of Justice or as ordered by a court of the state, following reference of the matter to the attorney general for collection, payment of civil penalties imposed under Iowa Code section 136C.4 shall be made by check, draft, or money order payable to the Iowa Department of Public Health.

38.9(7) *Requests for action under this rule.*

a. Any person may file a request to institute a proceeding pursuant to 38.9(3) to modify, suspend, or revoke an authorization as may be proper. Such a request shall be addressed to the Chief, Bureau of Radiological Health, Iowa Department of Public Health, Lucas State Office Building, Des Moines, Iowa 50319. The requests shall specify the action requested and set forth the facts that constitute the basis for the request. The bureau chief will discuss the matter with staff to determine appropriate action in accordance with 38.9(7)*"b."*

b. Within a reasonable time after a request pursuant to 38.9(7)*"a"* has been received, the bureau chief shall either institute the requested proceeding in accordance with this rule or shall advise the person who made the request in writing that no proceeding will be instituted, in whole or in part, with respect to the request, and the reasons for the decision.

c. (1) The bureau chief's decisions under this rule will be filed and within 25 days after the date of the bureau chief's decision under this rule that no proceeding will be instituted or other action taken in whole or in part, the agency may on its own motion review that decision, in whole or in part, to determine if the bureau chief has abused discretion. This review power does not limit in any way either the agency's supervisory power over delegated staff actions or the agency's power to consult with the staff on a formal or informal basis regarding institution of proceedings under this rule.

(2) No petition or other request for agency review of a bureau chief's decision under this rule will be entertained by the agency.

38.9(8) *Impounding.* The agency may impound or order the impounding of radioactive material in the possession of a person who fails to observe the provisions of Iowa Code chapter 136C, or any rules, license or registration conditions, or orders issued by this agency.

a. If agency action is necessary to protect the public health and safety, no prior notice need be given the owner or possessor. If agency action is not necessary to protect the public health and safety, the agency will give to either the owner or the possessor of the source of radiation written notice of the intention to impound the source of radiation.

(1) Either the owner or the possessor shall have 20 days from the date of personal service of certified mailing to request a hearing, except in the case where the regulated entity has consented in writing to the impoundment.

(2) If a hearing is requested, the agency will issue an order designating the time and place of hearing.

b. At the agency's direction, the impounded sources of radiation may be disposed of by:

(1) Returning the source of radiation to a properly licensed or registered owner that did not cause the emergency;

(2) Returning the source of radiation to a licensee or registrant after the emergency is over and after settlement of any compliance action; or

(3) Selling, destroying, or disposing of the source of radiation in another manner within the agency's discretion.

641—38.10(136C) Deliberate misconduct.

38.10(1) Any licensee, registrant, applicant for a license or certificate of registration, employee of a licensee, registrant or applicant; or any contractor (including a supplier or consultant), subcontractor, employee of a contractor or subcontractor of any licensee or registrant or applicant for a license or certificate of registration, who knowingly provides to any licensee, applicant, registrant, contractor, or

subcontractor any components, equipment, materials, or other goods or services that relate to a licensee's, registrant's or applicant's activities in this rule, may not:

a. Engage in deliberate misconduct that causes or would have caused, if not detected, a licensee, registrant, or applicant to be in violation of any rule, regulation, or order; or any term, condition, or limitation of any license or registration issued by the agency; or

b. Deliberately submit to the agency, a licensee, registrant, applicant, or a licensee's, registrant's, or applicant's contractor or subcontractor, information that the person submitting the information knows to be incomplete or inaccurate in some respect material to the agency.

38.10(2) A person who violates paragraph 38.10(1)*"a"* or *"b"* may be subject to enforcement action in accordance with the procedures in 641—38.9(136C).

38.10(3) For the purposes of paragraph 38.10(1)*"a,"* deliberate misconduct by a person means an intentional act or omission that the person knows:

a. Would cause a licensee, registrant, or applicant to be in violation of any rule, regulation, or order; or any term, condition, or limitation of any license issued by the agency; or

b. Constitutes a violation of a requirement, procedure, instruction, contract, purchase order, or policy of a licensee, registrant, applicant, contractor, or subcontractor.

These rules are intended to implement Iowa Code chapter 136C.

[Filed 4/7/80, Notice 2/6/80—published 4/30/80, effective 7/1/80]
[Filed 5/17/85, Notice 2/7/85—published 6/5/85, effective, see rule 38.18]
[Filed 11/24/86, Notice 10/8/86—published 12/17/86, effective 1/21/87]
[Filed 11/6/87, Notice 9/23/87—published 12/2/87, effective 1/6/88]
[Filed 9/30/88, Notice 8/10/88—published 10/19/88, effective 11/23/88]
[Filed emergency 11/9/89 after Notice 10/4/89—published 11/29/89, effective 11/9/89]
[Filed 1/14/91, Notice 10/17/90—published 2/6/91, effective 3/13/91][◊]
[Filed 5/10/91, Notice 4/3/91—published 5/29/91, effective 8/28/91]
[Filed 5/8/92, Notice 4/1/92—published 5/27/92, effective 7/1/92]
[Filed 7/16/92, Notice 5/27/92—published 8/5/92, effective 9/9/92]
[Filed emergency 8/14/92—published 9/2/92, effective 9/9/92]
[Filed emergency 9/14/92 after Notice 7/22/92—published 9/30/92, effective 10/1/92]
[Filed 11/5/92, Notice 9/30/92—published 11/25/92, effective 1/13/93]
[Filed 9/17/93, Notice 8/4/93—published 10/13/93, effective 1/1/94]
[Filed emergency 11/15/93—published 12/8/93, effective 11/15/93]
[Filed 7/14/94, Notice 6/8/94—published 8/3/94, effective 9/7/94]
[Filed 5/15/95, Notice 3/29/95—published 6/7/95, effective 7/12/95]
[Filed 1/11/96, Notice 10/11/95—published 1/31/96, effective 3/6/96]
[Filed 3/15/96, Notice 1/31/96—published 4/10/96, effective 5/15/96]
[Filed 9/16/96, Notice 7/17/96—published 10/9/96, effective 11/16/96]
[Filed 5/16/97, Notice 4/9/97—published 6/4/97, effective 7/9/97]
[Filed 2/26/98, Notice 9/10/97—published 3/25/98, effective 4/29/98]
[Filed 3/18/98, Notice 1/14/98—published 4/8/98, effective 7/1/98]
[Filed 4/2/99, Notice 1/13/99—published 4/21/99, effective 7/1/99]
[Filed 3/15/00, Notice 1/26/00—published 4/5/00, effective 5/10/00]
[Filed 3/16/01, Notice 2/7/01—published 4/4/01, effective 5/9/01][1]
[Filed 5/10/01, Notice 4/4/01—published 5/30/01, effective 7/4/01]
[Filed without Notice 1/10/02—published 2/6/02, effective 3/14/02]
[Filed 3/14/02, Notice 2/6/02—published 4/3/02, effective 5/8/02]
[Filed 11/15/02, Notice 10/2/02—published 12/11/02, effective 1/15/03]
[Filed 3/14/03, Notice 2/5/03—published 4/2/03, effective 5/7/03]
[Filed 11/17/03, Notice 10/1/03—published 12/10/03, effective 1/14/04]
[Filed 3/12/04, Notice 2/4/04—published 3/31/04, effective 5/5/04]
[Filed 3/11/05, Notice 2/2/05—published 3/30/05, effective 5/4/05]
[Filed 3/9/06, Notice 2/1/06—published 3/29/06, effective 5/3/06]

[Filed 3/16/07, Notice 1/31/07—published 4/11/07, effective 5/16/07]
[Filed 7/13/07, Notice 6/6/07—published 8/1/07, effective 9/5/07]
[Filed 5/14/08, Notice 4/9/08—published 6/4/08, effective 7/9/08]
[Filed ARC 8982B (Notice ARC 8762B, IAB 5/19/10), IAB 8/11/10, effective 9/15/10]
[Filed ARC 0577C (Notice ARC 0381C, IAB 10/3/12), IAB 2/6/13, effective 3/13/13]
[Filed ARC 1479C (Notice ARC 1414C, IAB 4/2/14), IAB 6/11/14, effective 7/16/14]
[Filed ARC 1639C (Notice ARC 1470C, IAB 5/28/14), IAB 10/1/14, effective 11/5/14]

◊ Two or more ARCs

1 Effective date of 38.8(11) delayed 70 days from May 9, 2001, by the Administrative Rules Review Committee at its meeting held May 4, 2001.
At its meeting held July 10, 2001, the Committee delayed the effective date until adjournment of the 2002 Session of the General Assembly.

CHAPTER 39
REGISTRATION OF RADIATION MACHINE FACILITIES, LICENSURE OF RADIOACTIVE MATERIALS AND TRANSPORTATION OF RADIOACTIVE MATERIALS

641—39.1(136C) Purpose and scope.

39.1(1) All persons possessing radiation machines within the state shall be registered in accordance with this chapter, except as specifically exempted.

39.1(2) No person shall receive, possess, use, transfer, own, or acquire radioactive material except as authorized in a specific or general license issued pursuant to this chapter or as otherwise provided in these rules.

39.1(3) All references to any Code of Federal Regulations (CFR) in this chapter are those in effect as of July 16, 2014.

39.1(4) In addition to the requirements of this chapter, all registrants are subject to the requirements of 641—Chapters 38 and 40. Furthermore, registrants engaged in healing arts are subject to the requirements of 641—Chapters 41 and 42; registrants engaged in industrial/nonmedical radiographic operations are subject to the requirements of 641—Chapter 45.

39.1(5) In areas under exclusive federal jurisdiction, nothing in these rules applies to the extent that persons are subject to regulation by the U.S. Nuclear Regulatory Commission (NRC) or other federal agencies.

[**ARC 7983B**, IAB 7/29/09, effective 9/2/09; **ARC 8982B**, IAB 8/11/10, effective 9/15/10; **ARC 1479C**, IAB 6/11/14, effective 7/16/14]

641—39.2(136C) Definitions. For the purpose of this chapter, the definitions in 641—Chapter 38 may also apply to this chapter.

641—39.3(136C) Requirements for registration of X-ray and other electronic machines that produce radiation.

39.3(1) *Exemptions.*

a. Electronic equipment that produces radiation incidental to its operation for other purposes is exempt from the registration and notification requirements of this chapter, provided that the dose equivalent rate averaged over an area of 10 square centimeters does not exceed 0.5 millirem (5 μSv) per hour at 5 centimeters from any accessible surface of such equipment. The production, testing, or factory servicing of such equipment shall not be exempt.

b. Radiation machines while in transit or storage incident thereto are exempt from the requirements of this chapter.

c. Domestic television receivers are exempt from the requirements of this chapter.

39.3(2) *Application for registration of radiation machine facilities.* Each person having a radiation machine facility shall:

a. Apply for registration of such facility with the agency prior to the operation of a radiation machine facility. In order to register equipment, the person must have a storage area located in Iowa where records of equipment maintenance and quality assurance, personnel monitoring, and personnel certification must be kept for review during an inspection. The records may be stored on a van, if appropriate. An Iowa mailing address is not required. Application for registration shall be completed on forms furnished by the agency and shall include the appropriate fee from 641—38.8(136C).

b. Designate on the application form an individual to be responsible for radiation protection.

c. Each registrant shall prohibit any person from furnishing radiation machine servicing or services as described in 39.3(3)*"d"* to the registrant's radiation machine facility until such person provides evidence that the person has been registered with the agency as a provider of services in accordance with 39.3(3).

39.3(3) *Application for registration of servicing and services.*

a. Each person who is engaged in the business of installing or offering to install radiation machines or is engaged in the business of furnishing or offering to furnish radiation machine servicing or services

in this state shall apply for registration of such services with the agency prior to furnishing or offering to furnish any such services.

b. Application for registration shall be completed on forms furnished by the agency and shall contain all information required by the agency as indicated on the forms and accompanying instructions and include the fee required in 641—paragraph 38.8(1)*"c."*

c. Each person applying for registration under this chapter shall specify:

(1) That the person has read and understands the requirements of these rules;

(2) The services for which the person is applying for registration;

(3) The training and experience that qualify the person to discharge the services for which the person is applying for registration;

(4) The type of measurement instrument to be used, frequency of calibration, and source of calibration; and

(5) The type of personnel dosimeters supplied, frequency of reading, and replacement or exchange schedule.

d. For the purpose of 39.3(3), services may include but shall not be limited to:

(1) Installation and servicing of radiation machines and associated radiation machine components;

(2) Calibration of radiation machines or radiation measurement instruments or devices;

(3) Radiation protection or health physics consultations or surveys; and

(4) Processor or processor servicing, or both.

(5) Calibration and compliance surveys of external beam radiation therapy units.

e. No individual shall perform services which are not specifically stated for that individual on the notice of registration issued by the agency.

f. A registration may be revoked for violating or causing a facility to violate any of the rules in 641—Chapters 38 through 45.

g. Radiation therapy physicists providing services for therapeutic radiation machines must provide proof that the training requirements of 641—subrule 41.3(6) have been met.

39.3(4) *Issuance of notice of registration.*

a. Upon a determination that an applicant meets the requirements of this chapter, the agency shall issue a notice of registration.

b. The agency may incorporate in the notice of registration at the time of issuance or thereafter by appropriate rule, regulation, or order, such additional requirements and conditions with respect to the registrant's receipt, possession, use, and transfer of radiation machines as it deems appropriate or necessary.

39.3(5) *Expiration of notice of registration.* Except as provided by 39.3(6)*"b,"* each notice of registration shall expire within 12 months of issuance or at the end of the specified day in the month and year stated therein.

39.3(6) *Renewal of notice of registration.*

a. Application for renewal of registration shall be filed in accordance with 39.3(2) or 39.3(3).

b. In any case in which a registrant has properly filed an application for renewal of current registration within 90 days prior to the expiration of the existing registration, such existing registration shall not expire until the application status has been finally determined by the agency.

39.3(7) *Report of changes.* The registrant shall notify the agency in writing before making any change which would render the information contained in the application for registration or the notice of registration no longer accurate.

39.3(8) *Approval not implied.* No person, in any advertisement, shall refer to the fact that the person or the person's facility is registered with the agency pursuant to the provisions of 39.3(2) or 39.3(3), and no person shall state or imply that any activity under such registration has been approved by the agency.

39.3(9) *Assembler and transfer obligation.*

a. Any person who sells, leases, transfers, lends, disposes of, assembles, or installs radiation machines in this state shall notify the agency in writing within 15 days of:

(1) The name and address of persons who have received these machines;

(2) The manufacturer, model, and serial number of each radiation machine transferred; and

(3) The date of transfer of each radiation machine.

b. No person shall make, sell, lease, transfer, lend, assemble, or install radiation machines or the supplies used in connection with such machines unless such supplies and equipment, when properly placed in operation and used, shall meet the requirements of 641—Chapters 38, 39, 40 and 41.

c. In the case of diagnostic X-ray systems which contain certified components, a copy of the assembler's report prepared in accordance with the requirements of the federal diagnostic X-ray standard (21 CFR 1020.30(d)) shall be submitted to the agency within 15 days following completion of the assembly. Such report shall suffice in lieu of any other report by the assembler.

39.3(10) *Reciprocity—out-of-state radiation machines.*

a. Whenever any radiation machine is to be brought into the state, for any temporary use, the person proposing to bring such machine into the state shall give written notice to the agency at least three working days before such machine is to be used in the state. The notice shall include:

(1) The type of radiation machine;

(2) The nature, duration, and scope of use;

(3) The exact location(s) where the radiation machine is to be used; and

(4) States in which this machine is registered.

b. If, for a specific case, the three-working-day period would impose an undue hardship on the person, upon application to the agency, permission to proceed sooner may be granted.

c. The person referred to in 39.3(10)*"a"* shall:

(1) Comply with all applicable rules of the agency;

(2) Supply the agency with such other information as the agency may reasonably request; and

(3) Not operate within the state on a temporary basis in excess of 180 calendar days in a 365-day reciprocity period. The 365-day reciprocity period starts on the day the agency receives the appropriate fee, as specified in 641—subrule 38.8(8), and ends exactly 365 days later. It is the registrant's responsibility to ensure the 180-day limit is not exceeded during the 365-day reciprocity period and to ensure that the reciprocal recognition is renewed 30 days prior to the expiration of the 365-day reciprocity period.

39.3(11) *Exemption.* Rescinded IAB 4/8/98, effective 7/1/98.

641—39.4(136C) Requirements for licensing of radioactive materials.

39.4(1) *Additional requirements.*

a. In addition to the requirements of this chapter, all licensees are subject to the requirements of 641—Chapters 38, 40 and 41. Furthermore, licensees engaged in industrial/nonmedical radiographic operations are subject to the requirements of 641—Chapter 45; licensees using radionuclides in the healing arts are subject to the requirements of 641—41.2(136C) and 641—Chapter 42; and licensees engaged in land disposal of radioactive material are subject to the requirements of 641—Chapter 40.

b. An Iowa radioactive materials license requires that the person have a permanent storage area in Iowa where records are maintained pertaining to licensed activities, equipment maintenance and quality assurance, personnel monitoring, and personnel certification and where material can be stored. The records may be stored on a van, if appropriate. The storage area must be accessible during inspections. An Iowa mailing address is not required.

39.4(2) *Source material.*

a. Any person is exempt from this chapter to the extent that such person receives, possesses, uses, owns, or transfers source material in any chemical mixture, compound, solution, or alloy in which the source material is by weight less than 1/20 of 1 percent (0.05 percent) of the mixture, compound, solution, or alloy.

b. Any person is exempt from this chapter to the extent that such person receives, possesses, uses, or transfers unrefined and unprocessed ore containing source material; provided that, except as authorized in a specific license, such person shall not refine or process such ore.

c. Any person is exempt from the requirements for a license set forth in this chapter and from the rules in this chapter and 641—Chapter 40 to the extent that such person receives, possesses, uses, or transfers:

(1) Any quantities of thorium contained in:

1. Incandescent gas mantles,

2. Vacuum tubes,

3. Welding rods,

4. Electric lamps for illuminating purposes, provided that each lamp does not contain more than 50 milligrams of thorium,

5. Germicidal lamps, sunlamps, and lamps for outdoor or industrial lighting, provided that each lamp does not contain more than 2 grams of thorium,

6. Rare earth metals and compounds, mixtures, and products containing not more than 0.25 percent by weight thorium, uranium, or any combination of these, or

7. Personnel neutron dosimeters, provided that each dosimeter does not contain more than 50 milligrams of thorium.

(2) Source material contained in the following products:

1. Glazed ceramic tableware manufactured before November 5, 2014, provided that the glaze contains not more than 20 percent by weight source material,

2. Glassware containing not more than 2 percent by weight source material or, for glassware manufactured before November 5, 2014, 10 percent by weight source material, but not including commercially manufactured glass brick, pane glass, ceramic tile, or other glass or ceramic used in construction,

3. Glass enamel or glass enamel frit containing not more than 10 percent by weight source material imported or ordered for importation into the United States, or initially distributed by manufacturers in the United States, before July 25, 1983, or

4. Piezoelectric ceramic containing not more than 2 percent by weight source material.

(3) Photographic film, negatives, and prints containing uranium or thorium.

(4) Any finished product or part fabricated of, or containing, tungsten-thorium or magnesium-thorium alloys, provided that the thorium content of the alloy does not exceed 4 percent by weight and that this exemption shall not be deemed to authorize the chemical, physical, or metallurgical treatment or processing of any such product or part.

(5) Uranium contained in counterweights installed in aircraft, rockets, projectiles, and missiles, or stored or handled in connection with installation or removal of such counterweights, provided that:

1. Reserved.

2. Each counterweight has been impressed with the following legend clearly legible through any plating or other covering: "DEPLETED URANIUM,"

3. Each counterweight is durably and legibly labeled or marked with the identification of the manufacturer and the statement: "UNAUTHORIZED ALTERATIONS PROHIBITED," and

4. This exemption shall not be deemed to authorize the chemical, physical, or metallurgical treatment or processing of any such counterweights other than repair or restoration of any plating or other covering.

(6) Natural or depleted uranium metal used as shielding constituting part of any shipping container, provided that:

1. The shipping container is conspicuously and legibly impressed with the legend "CAUTION—RADIOACTIVE SHIELDING—URANIUM," and

2. The uranium metal is encased in mild steel or equally fire-resistant metal of minimum wall thickness of 1/8 inch (3.2 mm).

(7) Thorium or uranium contained in or on finished optical lenses and mirrors, provided that each lens or mirror does not contain more than 10 percent by weight of thorium or uranium or, for lenses manufactured before November 5, 2014, 30 percent by weight of thorium; and that this exemption does not authorize either:

1. The shaping, grinding, or polishing of such lens or mirror or manufacturing processes other than the assembly of such lens or mirror into optical systems and devices without any alteration of the lens or mirror, or

2. The receipt, possession, use, or transfer of uranium or thorium contained in contact lenses, or in spectacles, or in eyepieces in binoculars or other optical instruments.

(8) Rescinded IAB 10/1/14, effective 11/5/14.

(9) Thorium contained in any finished aircraft engine part containing nickel-thoria alloy, provided that:

1. The thorium is dispersed in the nickel-thoria alloy in the form of finely divided thoria (thorium dioxide), and

2. The thorium content in the nickel-thoria alloy does not exceed 4 percent by weight.

d. The exemptions in 39.4(2) do not authorize the manufacture of any of the products described.

e. The requirements specified in 39.4(2)*"c"*(5)"2" and "3" need not be met by counterweights manufactured prior to December 31, 1969, provided that such counterweights are impressed with the legend, "CAUTION—RADIOACTIVE MATERIAL—URANIUM," as previously required by the rules.

f. No person may initially transfer for sale or distribution a product containing source material to persons exempt under these rules, or equivalent regulations of an agreement state or the Nuclear Regulatory Commission, unless authorized by a license issued under 10 CFR 40.52 to initially transfer such products for sale or distribution.

(1) Persons initially transferring for sale or distributing source material in products covered by the exemptions in these rules before November 5, 2014, without specific authorization may continue such distribution for one year beyond this date. Initial distribution may also be continued until the Nuclear Regulatory Commission takes final action on a pending application for license or license amendment to specifically authorize distribution submitted no later than one year beyond this date.

(2) Persons authorized to manufacture, process, or produce these materials or products containing source material by the agency, an agreement state, or the Nuclear Regulatory Commission, and persons who import finished products or parts, for sale or distribution must be authorized by a license issued under 10 CFR 40.52 for distribution only and are exempt from the requirements of 641—Chapter 40 and 39.4(25)*"a"* and *"b."*

39.4(3) *Radioactive material other than source material.*

a. Exempt concentrations.

(1) Except as provided in 39.4(3)*"a"*(2), any person is exempt from this chapter to the extent that such person receives, possesses, uses, transfers, owns or acquires products containing radioactive material introduced in concentrations not in excess of those listed in Appendix A of this chapter.

(2) No person may introduce radioactive material into a product or material knowing or having reason to believe that it will be transferred to persons exempt under 39.4(3)*"a"*(1) or equivalent regulations of the U.S. Nuclear Regulatory Commission, or any agreement state, except in accordance with a specific license issued pursuant to 10 CFR 32.11.

(3) An exemption is granted to persons who receive, possess, use, process, transfer, distribute, and dispose of materials containing or contaminated at concentrations less than 20 picocuries per gram of radium.

(4) This rule shall not be deemed to authorize the import of radioactive material or products containing radioactive material.

(5) A manufacturer, processor, or producer of a product or material is exempt from the requirements for a license and from these rules to the extent that the manufacturer, processor, or producer transfers radioactive material contained in a product or material in concentrations not in excess of the requirements in Appendix A of this chapter and introduced into the product or material by a licensee holding a specific license issued by the U.S. Nuclear Regulatory Commission expressly authorizing such introduction. This exemption does not apply to the transfer of radioactive material contained in any food, beverage, cosmetic, drug, or other commodity or product designed for ingestion or inhalation by, or application to, a human being.

b. Exempt quantities.

(1) Except as provided in 39.4(3)*"b"*(3), (4), and (5), any person is exempt from the requirements for a license and from these rules to the extent that such person receives, possesses, uses, transfers, owns,

or acquires radioactive material in individual quantities, each of which does not exceed the applicable quantity set forth in Appendix B of this chapter.

(2) Any person who possesses radioactive material received or acquired under a general license is exempt from the requirements for a license set forth in this chapter to the extent that such person possesses, uses, transfers or owns such radioactive material.

(3) This paragraph (39.4(3)*"b"*) does not authorize for purposes of commercial distribution the production, packaging, repackaging or transfer of radioactive material or the incorporation of radioactive material into products intended for commercial distribution.

(4) No person may, for purposes of commercial distribution, transfer radioactive material in the individual quantities set forth in Appendix B of this chapter, knowing or having reason to believe that such quantities of radioactive material will be transferred to persons exempt under 39.4(3) or equivalent regulations of the U.S. Nuclear Regulatory Commission, any agreement state or licensing state, except in accordance with a specific license issued by the U.S. Nuclear Regulatory Commission pursuant to Section 32.18 of 10 CFR 32, which license states that the radioactive material may be transferred by the licensee to persons exempt under 39.4(3)*"b"* or the equivalent regulations of the U.S. Nuclear Regulatory Commission, an agreement state, or licensing state. Authority to transfer possession or control by the manufacturer, processor, or producer of any equipment, device, commodity, or other product containing by-product material whose subsequent possession, use, transfer, and disposal by all other persons are exempted from regulatory requirements may be obtained only from the U.S. Nuclear Regulatory Commission, Washington, D.C. 20555.

(5) No person may, for purposes of producing an increased radiation level, combine quantities of radioactive material covered by this exemption so that the aggregate quantity exceeds the limits set forth in Appendix B of this chapter, except for radioactive material combined within a device placed in use before May 3, 1999, or as otherwise permitted by the rules in this chapter.

c. Exempt items.

(1) Certain items containing radioactive material. Except for persons who apply radioactive material to or persons who incorporate radioactive material into the following products, or persons who initially transfer for sale or distribution the following products containing radioactive material, any person is exempt from the requirements for a license set forth in this chapter and from these rules to the extent that the person receives, possesses, uses, transfers, owns, or acquires the following products:

1. Timepieces or hands or dials containing not more than the following specified quantities of radioactive material and not exceeding the following specified radiation dose rate:

- 25 millicuries (925 MBq) of tritium per timepiece;
- 5 millicuries (185 MBq) of tritium per hand;
- 15 millicuries (555 MBq) of tritium per dial (bezels when used shall be considered as part of the dial);
- 100 microcuries (3.7 MBq) of promethium-147 per watch or 200 microcuries (7.4 MBq) of promethium-147 per any other timepiece;
- 20 microcuries (0.74 MBq) of promethium-147 per watch hand or 40 microcuries (1.48 MBq) of promethium-147 per other timepiece hand;
- 60 microcuries (2.22 MBq) of promethium-147 per watch dial or 120 microcuries (4.44 MBq) of promethium-147 per other timepiece dial (bezels when used shall be considered as part of the dial);
- One microcurie (37 kBq) of radium-226 per timepiece in intact timepieces manufactured prior to November 30, 2007.

2. The radiation dose rate from hands and dials containing promethium-147 will not exceed, when measured through 50 milligrams per square centimeter of absorber:

- For wrist watches, 0.1 millirad (1 μGy) per hour at 10 centimeters from any surface.
- For pocket watches, 0.1 millirad (1 μGy) per hour at 1 centimeter from any surface.
- For any other timepiece, 0.2 millirad (2 μGy) per hour at 10 centimeters from any surface.

3. Precision balances containing not more than 1 millicurie (37 MBq) of tritium per balance or not more than 0.5 millicurie (18.5 MBq) of tritium per balance part manufactured before December 17, 2007.

4. Marine compasses containing not more than 750 millicuries (27.8 GBq) of tritium gas and other marine navigational instruments containing not more than 250 millicuries (9.25 GBq) of tritium gas manufactured before December 17, 2007.

5. Electron tubes, provided that each tube does not contain more than one of the following specified quantities of radioactive material:

- 150 millicuries (5.55 GBq) of tritium per microwave receiver protector tube or 10 millicuries (370 MBq) of tritium per any other electron tube;
- 1 microcurie (37 kBq) of cobalt-60;
- 5 microcuries (185 kBq) of nickel-63;
- 30 microcuries (1.11 MBq) of krypton-85;
- 5 microcuries (185 kBq) of cesium-137; and
- 30 microcuries (1.11 MBq) of promethium-147.

And provided further, that the radiation dose rate from each electron tube containing radioactive material will not exceed 1 millirad (10 μGy) per hour at 1 centimeter from any surface when measured through 7 milligrams per square centimeter of absorber. For purposes of 39.4(3)*"c"*(1)"5," the term "electron tubes" includes spark gap tubes, power tubes, gas tubes including glow lamps, receiving tubes, microwave tubes, indicator tubes, pick-up tubes, radiation detection tubes, and any other completely sealed tube that is designed to conduct or control electrical currents.

6. Ionizing radiation measuring instruments, for purposes of internal calibration or standardization, containing one or more sources of radioactive material, provided that:

- Each source contains no more than one exempt quantity set forth in Appendix B of this chapter;
- Each device contains no more than ten exempt quantities. For purposes of this requirement, a device's source(s) may contain either one type of or different types of radionuclides, and an individual exempt quantity may be composed of fractional parts of one or more of the exempt quantities in Appendix B of this chapter, provided that the sum of such fractions shall not exceed unity; or
- For americium-241, 0.05 microcurie (1.85 kBq) is considered an exempt quantity under 39.4(3)*"c"*(1)"6."

7. Ionization chamber smoke detectors containing not more than 1 microcurie (μCi) of americium-241 per detector in the form of a foil and designed to protect life and property from fires.

Any person who desires to apply by-product material to, or to incorporate by-product material into, the products exempted in subparagraph 39.4(3)*"c"*(1), or who desires to initially transfer for sale or distribution such products containing by-product material, should apply for a specific license with the Nuclear Regulatory Commission pursuant to 10 CFR 32.14, which license states that the product may be distributed by the licensee to persons exempt from the regulations pursuant to subparagraph 39.4(3)*"c"*(1).

(2) Self-luminous products containing radioactive material.

1. Tritium, krypton-85, or promethium-147. Except for persons who manufacture, process, produce, or initially transfer for sale or distribution self-luminous products containing tritium, krypton-85, or promethium-147, any person is exempt from these rules to the extent that such person receives, possesses, uses, transfers, owns, or acquires tritium, krypton-85 or promethium-147 in self-luminous products manufactured, processed, produced, imported, or initially transferred in accordance with a specific license issued by the U.S. Nuclear Regulatory Commission pursuant to Section 32.22 of 10 CFR Part 32, which license authorizes the initial transfer of the product for use under these rules. Any person who desires to manufacture, process, produce or initially transfer for sale or distribution self-luminous products containing tritium, krypton-85, or promethium-147 for use according to this paragraph shall apply for a license under 10 CFR 32.22 and for a certificate of registration in accordance with 10 CFR 32.210. The exemption in 39.4(3)*"c"*(2) does not apply to tritium, krypton-85, or promethium-147 used in products primarily for frivolous purposes or in toys or adornments.

2. Radium-226. Any person is exempt from these rules to the extent that such person receives, possesses, uses, transfers, or owns articles containing less than 0.1 microcurie (3.7 kBq) of radium-226 which were acquired prior to the effective date of these rules.

(3) Gas and aerosol detectors containing radioactive material.

1. Except for persons who manufacture, process, produce, or initially transfer for sale or distribution gas and aerosol detectors containing radioactive material, any person is exempt from the requirements for a license set forth in this chapter and from the requirements contained in 641—Chapters 38, 40, and 41 to the extent that such person receives, possesses, uses, transfers, owns, or acquires radioactive material in gas and aerosol detectors designed to protect health, safety or property and manufactured, processed, produced, or initially transferred in accordance with a specific license issued by the U.S. Nuclear Regulatory Commission pursuant to Section 32.26 of 10 CFR Part 32, which license authorizes the initial transfer of the product for use under this rule. This exemption also covers gas and aerosol detectors manufactured or distributed before November 20, 2007, in accordance with a specific license issued by a state under comparable provisions to 10 CFR 32.26 authorizing distribution to persons exempt from regulatory requirements.

2. Any person who desires to manufacture, process, or produce gas and aerosol detectors containing radioactive material, or to initially transfer such products for use pursuant to 39.4(3)*"c"*(3)"1," shall apply for a license under 10 CFR 32.26 and for a certificate of registration in accordance with 10 CFR 32.210.

(4) 1. Static elimination devices which contain, as a sealed source or sources, by-product material consisting of a total of not more than 18.5 MBq (500 μCi) of polonium-210 per device.

2. Ion generating tubes designed for ionization of air that contain, as a sealed source or sources, by-product material consisting of a total of not more than 18.5 MBq (500 μCi) of polonium-210 per device or of a total of not more than 1.85 GBq (50 mCi) of hydrogen-3 (tritium) per device.

3. Such devices authorized before November 5, 2014, for use under the general license that was provided in 39.4(22)*"a"* and equivalent regulations of an agreement state or the Nuclear Regulatory Commission and manufactured, tested and labeled by the manufacturer in accordance with the specifications contained in a specific license issued by the agency.

(5) Radioactive drug: capsules containing carbon-14 urea for "in vivo" diagnostic use for humans.

1. Except as provided in paragraphs *"b"* and *"c"* of this subrule, any person is exempt from the requirements for a license set forth in this chapter and in 641—41.2(136C) provided that such person receives, possesses, uses, transfers, owns, or acquires capsules containing 37 kBq 1μCi carbon-14 urea (allowing for nominal variation that may occur during the manufacturing process) each, for "in vivo" diagnostic use for humans.

2. Any person who desires to use the capsules for research involving human subjects shall apply for and receive a specific license pursuant to 641—41.2(136C).

3. Any person who desires to manufacture, prepare, process, produce, package, repackage, or transfer for commercial distribution such capsules shall apply for and receive a specific license pursuant to 39.4(20) of this rule.

4. Nothing in this subrule relieves persons from complying with applicable FDA or other federal or state requirements governing receipt, administration, and use of drugs.

(6) Certain industrial devices. Except for persons who manufacture, process, produce, or initially transfer for sale or distribution industrial devices containing radioactive material designed and manufactured for the purpose of detecting, measuring, gauging or controlling thickness, density, level, interface location, radiation, leakage, or qualitative or quantitative chemical composition, or for producing an ionized atmosphere, any person is exempt from the requirements for a license set forth in this chapter to the extent that such person receives, possesses, uses, transfers, owns, or acquires radioactive material, in these certain detecting, measuring, gauging, or controlling devices and certain devices for producing an ionized atmosphere, and manufactured, processed, produced, or initially transferred in accordance with a specific license issued under 10 CFR 32.30, which license authorizes the initial transfer of the device for use under these rules. This exemption does not cover sources not incorporated into a device, such as calibration and reference sources. Any person who desires to manufacture, process, produce, or initially transfer for sale or distribution industrial devices containing by-product material for use under these rules should apply for a license under 10 CFR 32.30 and for a certificate of registration in accordance with 10 CFR 32.210.

39.4(4) to **39.4(19)** Reserved.

39.4(20) *Types of licenses.* There are two types of licenses for radioactive materials: general and specific.

a. General licenses provided in this chapter are effective without the filing of applications with the agency or the issuance of licensing documents to the particular persons, although the filing of a certificate or registration application with the agency may be required by the particular general license. The general licensee is subject to all other applicable portions of these rules and any limitations of the general license.

b. Specific licenses require the submission of an application to the agency and the issuance of a licensing document by the agency. The licensee is subject to all applicable portions of these rules as well as any limitations specified in the licensing document.

c. All licensees and registrants must submit the appropriate fee in 641—subrule 38.8(2).

39.4(21) *General licenses—source material.*

a. A general license is hereby issued authorizing commercial and industrial firms, research, educational and medical institutions, and federal, state and local government agencies to receive, possess, use and transfer uranium and thorium, in their natural isotopic concentrations and in the form of depleted uranium, for research, development, educational, commercial, or operational purposes in the following forms and quantities:

(1) No more than 1.5 kg (3.3 lb) of uranium and thorium in dispersible forms (e.g., gaseous, liquid, powder, etc.) at any one time. Any material processed by the general licensee that alters the chemical or physical form of the material containing source material must be accounted for as a dispersible form. A person authorized to possess, use, and transfer source material under this paragraph may not receive more than a total of 7 kg (15.4 lb) of uranium and thorium in any one calendar year. Persons possessing source material in excess of these limits as of November 5, 2014, may continue to possess up to 7 kg (15.4 lb) of uranium and thorium at any one time for one year beyond this date, or until the agency takes final action on a pending application submitted on or before November 5, 2015, for a specific license for such material; and receive up to 70 kg (154 lb) of uranium or thorium in any one calendar year until December 31, 2014, or until the agency takes final action on a pending application submitted on or before November 5, 2015, for a specific license for such material; and

(2) No more than a total of 7 kg (15.4 lb) of uranium and thorium at any one time. A person authorized to possess, use, and transfer source material under this paragraph may not receive more than a total of 70 kg (154 lb) of uranium and thorium in any one calendar year. A person may not alter the chemical or physical form of the source material possessed under this paragraph unless it is accounted for under the limits of 39.4(21)*"a"*(1); or

(3) No more than 7 kg (15.4 lb) of uranium, removed during the treatment of drinking water, at any one time. A person may not remove more than 70 kg (154 lb) of uranium from drinking water during a calendar year under this paragraph; or

(4) No more than 7 kg (15.4 lb) of uranium and thorium at laboratories for the purpose of determining the concentration of uranium and thorium contained within the material being analyzed at any one time. A person authorized to possess, use, and transfer source material under this paragraph may not receive more than a total of 70 kg (154 lb) of source material in any one calendar year.

b. Any person who receives, possesses, uses, or transfers source material in accordance with the general license issued in 39.4(21)*"a"*:

(1) Is prohibited from administering source material, or the radiation therefrom, either externally or internally, to human beings except as may be authorized by the agency in a specific license.

(2) Shall not abandon such source material. Source material may be disposed of as follows:

1. A cumulative total of 0.5 kg (1.1 lb) of source material in a solid, nondispersible form may be transferred each calendar year, by a person authorized to receive, possess, use, and transfer source material under this general license to persons receiving the material for permanent disposal. The recipient of source material transferred under the provisions of this paragraph is exempt from the requirements to obtain a license under this chapter to the extent the source material is permanently disposed. This provision does not apply to any person who is in possession of source material under a specific license issued under this chapter; or

2. In accordance with 641—40.70(136C).

(3) Is subject to the provisions in 641—38.4(136C), 641—38.9(136C), 39.4(21), 39.4(32)*"a"* through *"d"* and *"f,"*39.4(41), 39.4(51), 39.4(52), 641—40.95(136C), 641—40.96(136C), and 641—40.97(136C).

(4) Reserved.

(5) Shall not export such source material except in accordance with 10 CFR Part 110.

c. Any person who receives, possesses, uses, or transfers source material in accordance with 39.4(21)*"a"* shall conduct activities so as to minimize contamination of the facility and the environment. When activities involving such source material are permanently ceased at any site, if evidence of significant contamination is identified, the general licensee shall notify the agency about such contamination and may consult with the agency as to the appropriateness of sampling and restoration activities to ensure that any contamination or residual source material remaining at the site where source material was used under this general license is not likely to result in exposures that exceed the limits in 641—40.29(136C).

d. A general license is hereby issued authorizing the receipt of title to source material without regard to quantity. This general license does not authorize any person to receive, possess, use, or transfer source material.

e. Depleted uranium in industrial products and devices.

(1) A general license is hereby issued to receive, acquire, possess, use, or transfer, in accordance with the provisions of 39.4(21)*"e"*(2), (3), (4), and (5), depleted uranium contained in industrial products or devices for the purpose of providing a concentrated mass in a small volume of the product or device.

(2) The general license in 39.4(21)*"e"*(1) applies only to industrial products or devices which have been manufactured either in accordance with a specific license issued to the manufacturer of the products or devices pursuant to 39.4(29)*"m"* or in accordance with a specific license issued to the manufacturer by the U.S. Nuclear Regulatory Commission or an agreement state which authorizes manufacture of the products or devices for distribution to persons generally licensed by the U.S. Nuclear Regulatory Commission or an agreement state.

(3) Persons who receive, acquire, possess, or use depleted uranium pursuant to the general license established by 39.4(21)*"e"*(1) shall file Agency Form "Registration Certificate—Use of Depleted Uranium Under General License" with the agency. The form shall be submitted within 30 days after the first receipt or acquisition of such depleted uranium. The general licensee shall furnish on the Agency Form "Registration Certificate—Use of Depleted Uranium Under a General License" the following information and such other information as may be required by that form:

- Name and address of the general licensee;
- A statement that the general licensee has developed and will maintain procedures designed to establish physical control over the depleted uranium described in 39.4(21)*"e"*(1) and designed to prevent transfer of such depleted uranium in any form, including metal scrap, to persons not authorized to receive the depleted uranium; and
- Name and title, address, and telephone number of the individual duly authorized to act for and on behalf of the general licensee in supervising the procedures identified in 39.4(21)*"e"*(3)"1."

2. The general licensee possessing or using depleted uranium under the general license established by 39.4(21)*"e"*(1) shall report in writing to the agency any changes in information furnished by the general licensee in Agency Form "Registration Certificate—Use of Depleted Uranium Under General License." The report shall be submitted within 30 days after the effective date of such change.

(4) A person who receives, acquires, possesses, or uses depleted uranium pursuant to the general license established by 39.4(21)*"e"*(1):

1. Shall not introduce such depleted uranium, in any form, into a chemical, physical, or metallurgical treatment or process, except a treatment or process for repair or restoration of any plating or other covering of the depleted uranium;

2. Shall not abandon such depleted uranium;

3. Shall transfer or dispose of such depleted uranium only by transfer in accordance with the provisions of 39.4(41). In the case where the transferee receives the depleted uranium pursuant to

the general license established by 39.4(21)*"e"*(1), the transferor shall furnish the transferee a copy of 641—Chapter 39 and a copy of Agency Form "Registration Certificate—Use of Depleted Uranium Under General License." In the case where the transferee receives the depleted uranium pursuant to a general license contained in the U.S. Nuclear Regulatory Commission's or agreement state's regulation equivalent to 39.4(21)*"e"*(1), the transferor shall furnish the transferee a copy of 641—Chapter 39 and a copy of the Agency Form "Registration Certificate—Use of Depleted Uranium Under General License" accompanied by a note explaining that use of the product or device is regulated by the U.S. Nuclear Regulatory Commission or agreement state under requirements substantially the same as those in 641—Chapters 38, 39, 40, 41 and 45;

4. Within 30 days of any transfer, shall report in writing to the agency the name and address of the person receiving the depleted uranium pursuant to such transfer; and

5. Shall not export such depleted uranium except in accordance with a license issued by the U.S. Nuclear Regulatory Commission pursuant to 10 CFR Part 110.

(5) Any person receiving, acquiring, possessing, using, or transferring depleted uranium pursuant to the general license established by 39.4(21)*"e"*(1) is exempt from the requirements of 641—Chapter 40 with respect to the depleted uranium covered by that general license.

f. Any person who receives, possesses, uses, or transfers source material in accordance with the general license granted in 39.4(21)*"a"* is exempt from the provisions of 641—Chapter 40 to the extent that such receipt, possession, use, and transfer are within the terms of this general license, except that such person shall comply with the provisions of 641—40.29(136C) and 641—40.70(136C) to the extent necessary to meet the provisions of 39.4(21)*"b"*(2) and 39.4(21)*"c."* However, this exemption does not apply to any person who also holds a specific license issued under this chapter.

g. No person may initially transfer or distribute source material to persons generally licensed under 39.4(21)*"a"*(1) and (2), or equivalent regulations of the Nuclear Regulatory Commission or an agreement state, unless authorized by a specific license issued in accordance with 39.4(39) or equivalent provisions of the Nuclear Regulatory Commission or an agreement state. This prohibition does not apply to analytical laboratories returning processed samples to the client who initially provided the sample. Initial distribution of source material to persons generally licensed by 39.4(21)*"a"* before November 5, 2014, without specific authorization may continue for one year beyond this date. Distribution may also be continued until the agency takes final action on a pending application for license or license amendment to specifically authorize distribution submitted on or before November 5, 2015.

39.4(22) *General licenses—radioactive material other than source material.* This subrule establishes general licenses for the possession and use of radioactive material and a general license for ownership of radioactive material. (Note: Different general licenses are issued in this subrule, each of which has its own specific conditions and requirements.)

a. Rescinded IAB 10/1/14, effective 11/5/14.

b. and *c.* Reserved.

d. Certain detecting, measuring, gauging, or controlling devices and certain devices for producing light or an ionized atmosphere.

(1) A general license is hereby issued to commercial and industrial firms and research, educational and medical institutions, individuals in the conduct of their business, and federal, state or local government agencies to acquire, receive, possess, use or transfer, in accordance with the provisions of 39.4(22)*"d"*(2), (3), and (4), radioactive material contained in devices designed and manufactured for the purpose of detecting, measuring, gauging or controlling thickness, density, level, interface location, radiation, leakage, or qualitative or quantitative chemical composition, or for producing light or an ionized atmosphere.

(2) The general license in 39.4(22)*"d"*(1) applies only to radioactive material contained in devices which have been manufactured or initially transferred and labeled in accordance with the specifications contained in a specific license by this agency issued under 39.4(29)*"d"*; or an equivalent specific license issued by the NRC or an agreement state or a licensing state; or an equivalent specific license issued by a state with provisions comparable to 39.4(29)*"d,"* which authorizes distribution of the devices.

The devices must have been received from one of the specific licensees described in 39.4(22)*"d"*(2) or through a transfer made under 39.4(22)*"d"*(3).

(3) Any person who acquires, receives, possesses, uses or transfers radioactive material in a device pursuant to the general license in 39.4(22)*"d"*(1):

1. Shall ensure that all labels affixed to the device at the time of receipt and bearing a statement that removal of the label is prohibited are maintained thereon and shall comply with all instructions and precautions provided by such labels;

2. Shall ensure that the device is tested for leakage of radioactive material and proper operation of the on-off mechanism and indicator, if any, at no longer than six-month intervals or at such other intervals as are specified in the label; However,

- Devices containing only krypton need not be tested for leakage of radioactive material; and
- Devices containing only tritium or not more than 100 microcuries of other beta- or gamma-emitting material or both or 10 microcuries of alpha-emitting material and devices held in storage in the original shipping container prior to initial installation need not be tested for any purpose;

3. Shall ensure that the test required by 39.4(22)*"d"*(3) and other testing, installation, servicing, and removal from installation involving the radioactive material, its shielding or containment are performed:

- In accordance with the instructions provided by the labels; or
- By a person holding a specific license pursuant to 641—39.4(136C), the NRC, an agreement state or a licensing state to perform such activities;

4. Shall maintain records showing compliance with the requirements of 39.4(22)*"d"*(3). The records must show the results of tests. The records also must show the dates of performance of, and the names of persons performing, testing, installing, servicing, and removing from the installation radioactive material and its shielding or containment. The licensee shall retain these records as follows:

- Each record of a test for leakage or radioactive material required by 39.4(22)*"d"*(3) must be retained for three years after the next required leak test is performed or until the sealed source is transferred or disposed of;
- Each record of a test of the on-off mechanism and indicator required by 39.4(22)*"d"*(3) must be retained for three years after the next required test of the on-off mechanism and indicator is performed or until the sealed source is transferred or disposed of;
- Each record that is required by 39.4(22)*"d"*(3) must be retained for three years from the date of the recorded event or until the device is transferred or disposed of;

5. Shall immediately suspend operation of the device if there is a failure of, or damage to, or any indication of a possible failure of or damage to, the shielding of the radioactive material or the on-off mechanism or indicator, or upon the detection of 0.005 microcurie (185 Bq) or more removable radioactive material. The device may not be operated until it has been repaired by the manufacturer or other person holding a specific license to repair such devices that was issued by this agency, the NRC, an agreement state or licensing state. The device and any radioactive material from the device may only be disposed of by transfer to a person authorized by a specific license to receive the radioactive material in the device or as otherwise approved by this agency. A report containing a brief description of the event and the remedial action taken, and in the case of detection of 0.005 microcurie (185 Bq) or more removable radioactive material or failure of or damage to a source likely to result in contamination of the premises or the environs, a plan for ensuring that the premises and environs are acceptable for unrestricted use, must be furnished to the agency within 30 days. Under these circumstances, the criteria set out in 641—40.29(136C) may be applicable, as determined by the agency on a case-by-case basis;

6. Shall not abandon the device containing radioactive material;

7. Shall not export the device containing radioactive material except in accordance with 10 CFR Part 110;

8. Shall transfer or dispose of the device containing radioactive material only by export as provided by 39.4(22)*"d"*(3)"7," by transfer to another general licensee as authorized in 39.4(22)*"d"*(3)"9," to a person authorized to receive the device by a specific license issued by the agency, the NRC, an agreement

state or a licensing state whose specific license authorizes the person to receive the device or which authorizes waste collection, or as otherwise approved under 39.4(22)*"d"*(3):

● Shall furnish a report to this agency within 30 days after the transfer of a device to a specific licensee or export. The report must contain the identification of the device by manufacturer's (or initial transferor's) name, model number, and serial number; the name, address and license number of the person receiving the device (license number not applicable if device is exported); and the date of the transfer;

● Shall obtain written agency approval before transferring the device to any other specific licensee not specifically identified in 39.4(22)*"d"*; however, a holder of a specific license may transfer a device for possession and use under its own specific license without prior approval if the holder:

—Verifies that the specific license authorizes the possession and use, or applies for and obtains an amendment to the license authorizing the possession and use;

—Removes, alters, covers, or clearly and unambiguously augments the existing label (otherwise required by 39.4(22)*"d"*(3)"1") so that the device is labeled in compliance with 641—40.63(136C) of these rules; however the manufacturer, model number, and serial number must be retained;

—Obtains manufacturer's or initial transferor's information concerning maintenance that would be applicable under the specific license (such as leak-testing procedures); and

—Reports the transfer under 39.4(22)*"d"*(3)"8" of this chapter.

9. Shall transfer the device to another general licensee only if:

● The device remains in use at a particular location. In this case, the transferor shall give the transferee a copy of these rules and any safety documents identified in the label of the device. Within 30 days of the transfer, the transferor shall report to this agency the manufacturer's (or initial transferor's) name; the model number and the serial number of the device transferred; the transferee's name and mailing address for the location of use; and the name, title, and telephone number of the responsible individual identified by the transferee in accordance with 39.4(22)*"d"*(3)"12" to have knowledge of and authority to take actions to ensure compliance with the appropriate rules and requirements; or

● The device is held in storage, by an intermediate person, in the original shipping container at its intended location of use prior to initial use by a general licensee;

10. Shall comply with the provisions of 641—40.95(136C) and 641—40.96(136C), but shall be exempt from the other requirements of 641—Chapter 40;

11. Shall respond to written requests from this agency to provide information relating to the general license within 30 calendar days of the date of the request, or other item specified in the request. If the general licensee cannot provide the requested information within the allotted time, it shall, within that same time period, request a longer period to supply the information by submitting a letter to the agency and providing written justification as to why it cannot comply;

12. Shall appoint an individual responsible for having knowledge of the appropriate rules and requirements and the authority for taking required actions to comply with appropriate rules and requirements. The general licensee, through this individual, shall ensure the day-to-day compliance with appropriate rules and requirements. This appointment does not relieve the general licensee of any of its responsibility in this regard;

13. Shall register as follows:

● Shall register devices as approved in the Sealed Source Device Registry. Each address for a location of use, as described in 39.4(22)*"d"*(3)"13," represents a separate general licensee and requires a separate registration and fee;

● If in possession of devices meeting the criteria of 39.4(22)*"d"*(3)"13," shall register these devices annually with the agency and shall pay the fee required in 641—paragraph 38.8(2)*"c."* Registration must be done by verifying, correcting, and adding to the information provided in a request for registration received from the agency. The registration information must be submitted 30 days from the date of the request for registration or as otherwise indicated in the request. In addition, a general licensee holding devices meeting the criteria of 39.4(22)*"d"*(3)"13" is subject to the bankruptcy notification requirement of 39.4(32)*"e"*;

● In registering devices, the general licensee shall furnish the following information and any other information specifically requested by the agency:

—Name and mailing address of the general licensee;

—Information about each device: the manufacturer (or initial transferor), model number, serial number, the radioisotope and activity (as indicated on the label);

—Name, title, and telephone number of the responsible person designated as a representative of the general licensee;

—Address or location at which the device(s) is both used and stored. For portable devices, the address of the primary place of storage;

—Certification by the responsible representative of the general licensee that the information concerning the device(s) has been verified through a physical inventory and check of label information.

—Certification by the responsible representative of the general licensee that the licensee is aware of the requirements of the general license.

● Persons generally licensed by this agency under 39.4(22)*"d"*(3)"13" or an agreement state are not subject to registration requirements of 39.4(22)*"d"*(3)"13" if the devices are used in areas subject to this agency's jurisdiction for a period of less than 180 days in any calendar year. The agency will not request registration information from such licensees;

14. Shall report changes to the mailing address for the location of use (including change in name of general licensee) to the agency within 30 days of the effective date of the change. For a portable device, a report of address change is only required for a change in the device's primary place of storage; and

15. May not hold devices that are not in use for longer than two years. If devices with shutters are not being used, the shutter must be locked in the closed position. The testing required by 39.4(22)*"d"* need not be performed during the period of storage only. However, when devices are put back into service or transferred to another person, and have not been tested within the required test interval, they must be tested for leakage before use or transfer and the shutter tested before use. Devices kept in standby for future use are excluded from the two-year time limit if the general licensee performs quarterly physical inventories of these devices while they are in standby.

(4) The general license in 39.4(22)*"d"*(1) does not authorize the manufacture or import of devices containing radioactive material.

(5) A general license to install devices generally licensed in 39.4(22)*"d."* Any person who holds a specific license issued by an agreement state authorizing the holder to manufacture, install, or service a device described in 39.4(22)*"d"* within such agreement state is hereby granted a general license to install and service such device in any non-agreement state and a general license to install and service such device in offshore waters, as defined in 641—45.1(136C), provided that:

1. The device has been manufactured, labeled, installed, and serviced in accordance with the applicable provision of the specific license issued to such person by the agreement state, and

2. Such person ensures that any labels required to be affixed to the device under regulations of the agreement state which licensed manufacture of the device bear a statement that removal of the label is prohibited.

e. Luminous safety devices for aircraft.

(1) A general license is hereby issued to own, receive, acquire, possess, and use tritium or promethium-147 contained in luminous safety devices for use in aircraft, provided:

1. Each device contains not more than 10 curies (370 GBq) of tritium or 300 millicuries (11.1 GBq) of promethium-147; and

2. Each device has been manufactured, assembled or imported in accordance with a specific license issued by the U.S. Nuclear Regulatory Commission, or each device has been manufactured or assembled in accordance with the specifications contained in a specific license issued by the agency or any agreement state to the manufacturer or assembler of such device pursuant to licensing requirements equivalent to those in Section 32.53 of 10 CFR Part 32.

(2) Persons who own, receive, acquire, possess, or use luminous safety devices pursuant to the general license in 39.4(22)*"e"*(1) are exempt from the requirements of 641—Chapter 40 except that they shall comply with the provisions of 641—40.95(136C) and 40.96(136C).

(3) This general license does not authorize the manufacture, assembly, or repair of luminous safety devices containing tritium or promethium-147.

(4) This general license does not authorize the ownership, receipt, acquisition, possession or use of promethium-147 contained in instrument dials.

(5) This general license is subject to the provisions of 641—38.4(136C) to 641—38.5(136C), 39.4(32), 39.4(41), 39.4(51), and 641—39.5(136C).

f. Ownership of radioactive material. A general license is hereby issued to own radioactive material without regard to quantity. Notwithstanding any other provisions of this chapter, this general license does not authorize the manufacture, production, transfer, receipt, possession or use of radioactive material.

g. Calibration and reference sources.

(1) A general license is hereby issued to those persons listed below to own, receive, acquire, possess, use, and transfer, in accordance with the provisions of 39.4(22)*"g"*(4) and (5), americium-241 in the form of calibration or reference sources:

1. Any person who holds a specific license issued by the agency which authorizes the person to receive, possess, use, and transfer radioactive material; and

2. Any person who holds a specific license issued by the U.S. Nuclear Regulatory Commission which authorizes the person to receive, possess, use, and transfer special nuclear material.

(2) A general license is hereby issued to own, receive, possess, use, and transfer plutonium in the form of calibration or reference sources in accordance with the provisions of 39.4(22)*"g"*(4) and (5) to any person who holds a specific license issued by the agency which authorizes the person to receive, possess, use, and transfer radioactive material.

(3) A general license is hereby issued to own, receive, possess, use, and transfer radium-226 in the form of calibration or reference sources in accordance with the provisions of 39.4(22)*"g"*(4) and (5) to any person who holds a specific license issued by the agency which authorizes the person to receive, possess, use, and transfer radioactive material.

(4) The general licenses in 39.4(22)*"g"*(1), (2), and (3) apply only to calibration or reference sources which have been manufactured in accordance with the specifications contained in a specific license issued to the manufacturer or importer of the sources by the U.S. Nuclear Regulatory Commission pursuant to Section 32.57 of 10 CFR Part 32 or Section 70.39 of 10 CFR Part 70 or which have been manufactured in accordance with the specifications contained in a specific license issued to the manufacturer by the agency, any agreement state or licensing state pursuant to licensing requirements equivalent to those contained in Section 32.57 of 10 CFR Part 32 or Section 70.39 of 10 CFR Part 70.

(5) The general licenses provided in 39.4(22)*"g"*(1), (2), and (3) are subject to the provisions of 641—38.4(136C) to 641—38.5(136C), 39.4(32), 39.4(41), 39.4(51), 641—39.5(136C), and 641—Chapter 40. In addition, persons who own, receive, acquire, possess, use, or transfer one or more calibration or reference sources pursuant to these general licenses:

1. Shall not possess at any one time, at any one location of storage or use, more than 5 microcuries (185 kBq) of americium-241, 5 microcuries (185 kBq) of plutonium, or 5 microcuries (185 kBq) of radium-226 in such sources;

2. Shall not receive, possess, use, or transfer such source unless the source, or the storage container, bears a label which includes one of the following statements, as appropriate, or a substantially similar statement which contains the information called for in one of the following statements, as appropriate:

- The receipt, possession, use and transfer of this source, Model _____, Serial No. _____, are subject to a general license and the regulations of the U.S. Nuclear Regulatory Commission or of a state with which the Commission has entered into an agreement for the exercise of regulatory authority. Do not remove this label.

CAUTION—RADIOACTIVE MATERIAL—THIS SOURCE CONTAINS (AMERICIUM-241). (PLUTONIUM) (showing only the name of the appropriate material) DO NOT TOUCH RADIOACTIVE PORTION OF THIS SOURCE.

_____
Name of manufacturer or importer
OR

● The receipt, possession, use and transfer of this source, Model _____, Serial No. _____, are subject to a general license and the regulations of a licensing state. Do not remove this label.

CAUTION—RADIOACTIVE MATERIAL—THIS SOURCE CONTAINS RADIUM-226.
DO NOT TOUCH RADIOACTIVE PORTION OF THIS SOURCE.

_____
Name of manufacturer or importer

3. Shall not transfer, abandon, or dispose of such source except by transfer to a person authorized by a license from the agency, the U.S. Nuclear Regulatory Commission, an agreement state or a licensing state to receive the source;

4. Shall store such source, except when the source is being used, in a closed container adequately designed and constructed to contain americium-241, plutonium, or radium-226 which might otherwise escape during storage; and

5. Shall not use such source for any purpose other than the calibration of radiation detectors or the standardization of other sources.

(6) These general licenses do not authorize the manufacture of calibration or reference sources containing americium-241, plutonium, or radium-226.

h. Reserved.

i. General license for use of radioactive material for certain in vitro clinical or laboratory testing. The New Drug Provisions of the Federal Food, Drug, and Cosmetic Act also govern the availability and use of any specific diagnostic drugs in interstate commerce.

(1) A general license is hereby issued to any physician, veterinarian, clinical laboratory or hospital to receive, acquire, possess, transfer or use, for any of the following stated tests, in accordance with the provisions of 39.4(22)*"i"*(2), (3), (4), (5), and (6), the following radioactive materials in prepackaged units for use in in vitro clinical or laboratory tests not involving internal or external administration of radioactive material, or the radiation therefrom, to human beings or animals:

1. Carbon-14, in units not exceeding 10 microcuries (370 kBq) each.
2. Cobalt-57, in units not exceeding 10 microcuries (370 kBq) each.
3. Hydrogen-3 (tritium), in units not exceeding 50 microcuries (1.85 MBq) each.
4. Iodine-125, in units not exceeding 10 microcuries (370 kBq) each.
5. Mock iodine-125 reference or calibration sources, in units not exceeding 0.05 microcurie (1.85 kBq) of iodine-129 and 0.005 microcurie (1.85 Bq) of americium-241 each.
6. Iodine-131, in units not exceeding 10 microcuries (370 kBq) each.
7. Iron-59, in units not exceeding 20 microcuries (740 kBq) each.
8. Selenium-75, in units not exceeding 10 microcuries (370 kBq) each.

(2) No person shall receive, acquire, possess, use or transfer radioactive material pursuant to the general license established by 39.4(22)*"i"*(1) until the person has filed an Agency Form "Certificate—In Vitro Testing with Radioactive Material Under General License" with the agency and received from the agency a validated copy of the form with certification number assigned. The physician, veterinarian, clinical laboratory or hospital shall furnish the following information on the form and such other information as may be required by the form:

1. Name and address of the physician, veterinarian, clinical laboratory or hospital;
2. The location of use; and
3. A statement that the physician, veterinarian, clinical laboratory or hospital has appropriate radiation measuring instruments to carry out in vitro clinical or laboratory tests with radioactive material as authorized under the general license in 39.4(22)*"i"*(1) and that such tests will be performed only by personnel competent in the use of such instruments and in the handling of the radioactive material.

(3) A person who receives, acquires, possesses or uses radioactive material pursuant to the general license established by 39.4(22)*"i"*(1) shall comply with the following:

1. The general licensee shall not possess at any one time, pursuant to the general license in 39.4(22)*"i"*(1), at any one location of storage or use, a total amount of iodine-125, iodine-131, selenium-75, iron-59, or cobalt-57 in excess of 200 microcuries (7.4 MBq).

2. The general licensee shall store the radioactive material, until used, in the original shipping container or in a container providing equivalent radiation protection.

3. The general licensee shall use the radioactive material only for the uses authorized by 39.4(22)*"i"*(1).

4. The general licensee shall not transfer the radioactive material to a person who is not authorized to receive it pursuant to a license issued by the agency, the U.S. Nuclear Regulatory Commission, any agreement state or licensing state, nor transfer the radioactive material in any manner other than in the unopened, labeled shipping container as received from the supplier.

5. The general licensee shall dispose of the mock iodine-125 reference or calibration sources described in 39.4(22)*"i"*(1)"8" as required by 641—subrule 40.70(1).

(4) The general licensee shall not receive, acquire, possess, or use radioactive material pursuant to 39.4(22)*"i"*(1):

1. Except as prepackaged units which are labeled in accordance with the provisions of an applicable specific license issued pursuant to 39.4(29)*"h"* or in accordance with the provisions of a specific license issued by the U.S. Nuclear Regulatory Commission, any agreement state or licensing state which authorizes the manufacture and distribution of iodine-125, iodine-131, carbon-14, hydrogen-3 (tritium), iron-59, selenium-75, cobalt-57, or mock iodine-125 to persons generally licensed under 39.4(22)*"i"* or its equivalent, and

2. Unless one of the following statements, as appropriate, or a substantially similar statement which contains the information called for in one of the following statements, appears on a label affixed to each prepackaged unit or appears in a leaflet or brochure which accompanies the package:

- This radioactive material shall be received, acquired, possessed, and used only by physicians, veterinarians, clinical laboratories or hospitals and only for in vitro clinical or laboratory tests not involving internal or external administration of the material, or the radiation therefrom, to human beings or animals. Its receipt, acquisition, possession, use, and transfer are subject to the regulations and a general license of the U.S. Nuclear Regulatory Commission or of a state with which the Commission has entered into an agreement for the exercise of regulatory authority.

_____

Name of manufacturer

- This radioactive material shall be received, acquired, possessed, and used only by physicians, veterinarians, clinical laboratories or hospitals and only for in vitro clinical or laboratory tests not involving internal or external administration of the material, or the radiation therefrom, to human beings or animals. Its receipt, acquisition, possession, use and transfer are subject to the regulations and a general license of a licensing state.

_____

Name of manufacturer

(5) The physician, veterinarian, clinical laboratory or hospital possessing or using radioactive material under the general license of 39.4(22)*"i"*(1) shall report in writing to the agency any changes in the information furnished in the "Certificate—In Vitro Testing with Radioactive Material Under General License," Agency Form V. The report shall be furnished within 30 days after the effective date of such change.

(6) Any person using radioactive material pursuant to the general license of 39.4(22)*"i"*(1) is exempt from the requirements of 641—Chapter 40 with respect to radioactive material covered by that general license, except that such persons using the mock iodine-125 described in 39.4(22)*"i"*(1)"8" shall comply with the provisions of 641—subrule 40.70(1) and rules 40.95(136C) and 40.96(136C).

j. Ice detection devices.

(1) A general license is hereby issued to own, receive, acquire, possess, use, and transfer strontium-90 contained in ice detection devices, provided each device contains not more than 50 microcuries (1.85 MBq) of strontium-90 and each device has been manufactured or imported in accordance with a specific license issued by the U.S. Nuclear Regulatory Commission or each device has been manufactured in accordance with the specifications contained in a specific license issued by the agency or an agreement state to the manufacturer of such device pursuant to licensing requirements equivalent to those in Section 32.61 of 10 CFR Part 32.

(2) Persons who own, receive, acquire, possess, use, or transfer strontium-90 contained in ice detection devices pursuant to the general license in 39.4(22)*"j"*(1):

1. Shall, upon occurrence of visually observable damage such as a bend or crack or discoloration from overheating to the device, discontinue use of the device until it has been inspected, tested for leakage and repaired by a person holding a specific license from the U.S. Nuclear Regulatory Commission or an agreement state to manufacture or service such devices; or shall dispose of the device pursuant to the provisions of 641—subrule 40.70(1);

2. Shall ensure that all labels affixed to the device at the time of receipt, and which bear a statement which prohibits removal of the labels, are maintained thereon; and

3. Are exempt from the requirements of 641—Chapter 40 except that such persons shall comply with the provisions of 641—subrule 40.70(1), and rules 40.95(136C) and 40.96(136C).

(3) This general license does not authorize the manufacture, assembly, disassembly or repair of strontium-90 in ice detection devices.

(4) This general license is subject to the provisions of 641—38.4(136C) to 641—38.5(136C), 39.4(32), 39.4(41), 39.4(51), and 641—39.5(136C).

k. Certain items and self-luminous products containing radium-226.

(1) A general license is hereby issued to any person to acquire, receive, possess, use, or transfer, in accordance with 39.4(22)*"k"*(2), (3), and (4), radium-226 contained in the following products manufactured prior to November 30, 2007.

1. Antiquities originally intended for use by the general public. For the purposes of this subrule, "antiquities" means products originally intended for use by the general public and distributed in the late nineteenth and early twentieth centuries including, but not limited to, radium emanator jars, revigators, radium water jars, radon generators, refrigerator cards, radium bath salts, and healing pads.

2. Intact and non-intact timepieces containing greater than 1 microcurie (0.037 megabecquerel), and timepiece hands and dials no longer installed in timepieces.

3. Luminous items installed in air, marine, or land vehicles.

4. All other luminous products, provided that no more than 100 items are used or stored at the same location at any one time.

5. Small radium sources containing no more than 1 microcurie (0.037 megabecquerel) of radium-226. For the purposes of this subrule, "small radium sources" means discrete survey instrument check sources, sources contained in radiation measuring instruments, sources used in educational demonstrations (such as cloud chambers and spinthariscopes), electron tubes, lightning rods, ionization sources, static eliminators, or as designated by the agency.

(2) Persons who acquire, receive, possess, use, or transfer by-product material under the general license issued in 39.4(22)*"k"*(1) shall comply with the provisions of 641—40.95(136C) and 641—40.96(136C), but shall be exempt from the other requirements of 641—Chapter 40, to the extent that the receipt, possession, use, or transfer of by-product material is within the terms of the general license; provided, however, that this exemption shall not be deemed to apply to any such person specifically licensed under 39.4(24).

(3) Any person who acquires, receives, possesses, uses, or transfers by-product material in accordance with the general license in 39.4(22)*"k"*(1) shall:

1. Notify the agency if there is any indication of possible damage to the product which could result in a loss of the radioactive material. A report containing a brief description of the event and the remedial action taken must be furnished to the Iowa Department of Public Health, Bureau of Radiological Health, Lucas State Office Building, 5th Floor, 321 East 12th Street, Des Moines, Iowa, within 30 calendar days.

2. Not abandon products containing radium-226. The product, and any radioactive material from the product, may only be disposed of according to 641—40.77(136C) or by transfer to a person authorized by a specific license to receive the radium-226 in the product or as otherwise approved by the agency.

3. Not export products containing radium-226 except in accordance with 10 CFR Part 110.

4. Dispose of products containing radium-226 at a disposal facility authorized to dispose of radioactive material in accordance with any federal or state solid or hazardous waste law, including the Solid Waste Disposal Act, as authorized under the Energy Policy Act of 2005, by transfer to a person authorized to receive radium-226 by a specific license issued under 39.4(24), or equivalent NRC or agreement state requirements, or as otherwise approved by the agency.

5. Respond in writing to a written request from the agency to provide information relating to the general license within 30 calendar days of the request, or other time specified in the request.

(4) The general license in 39.4(22)*"k"*(1) does not authorize the manufacture, assembly, disassembly, repair, or import of products containing radium-226, except that timepieces may be disassembled and repaired.

39.4(23) Reserved.

39.4(24) *Filing application for specific licenses.*

a. Applications for specific licenses shall be filed on a form prescribed by the agency and include the fee required in 641—subrule 38.8(2).

b. The agency may at any time after the filing of the original application, and before the expiration of the license, require further statements in order to enable the agency to determine whether the application should be granted or denied or whether a license should be modified or revoked.

c. Each application shall be signed by the applicant or licensee or a person duly authorized to act for and on the applicant's or licensee's behalf.

d. An application for a license may include a request for a license authorizing one or more activities.

e. Applications and documents submitted to the agency may be made available for public inspection except that the agency may withhold any document or part thereof from public inspection if disclosure of its content is not required in the public interest and would adversely affect the interest of a person concerned.

f. (1) Each application to possess radioactive materials in unsealed form, on foils or plated sources, or sealed in glass in excess of the quantities in Appendix G of this chapter, must contain either:

1. An evaluation showing that the maximum dose to a person offsite due to a release of radioactive materials would not exceed 1 rem effective dose equivalent or 5 rems to the thyroid; or

2. An emergency plan for responding to a release of radioactive material.

(2) One or more of the following factors may be used to support an evaluation submitted under 39.4(24)*"f"*(1)"1" of this subrule:

1. The radioactive material is physically separated so that only a portion could be involved in an accident;

2. All or part of the radioactive material is not subject to release during an accident because of the way it is stored or packaged;

3. The release fraction in the respirable size range would be lower than the release fraction shown in Appendix G due to the chemical or physical form of the material;

4. The solubility of the radioactive material would reduce the dose received;

5. Facility design or engineered safety features in the facility would cause the release fraction to be lower than shown in Appendix G;

6. Operating restrictions or procedures would prevent a release fraction as large as that shown in Appendix G; or

7. Other factors appropriated for the specific facility.

(3) An emergency plan for responding to a release of radioactive material submitted under 39.4(24)*"f"*(1)"2" must include the following information:

1. Facility description. A brief description of the licensee's facility and area near the site.

2. Types of accidents. An identification of each type of radioactive materials accident for which protective actions may be needed.

3. Classification of accidents. A classification system for classifying accidents as alerts or site area emergencies.

4. Detection of accidents. Identification of the means of detecting each type of accident in a timely manner.

5. Mitigation of consequences. A brief description of the means and equipment for mitigating the consequences of each type of accident, including those provided to protect workers onsite, and a description of the program for maintaining the equipment.

6. Assessment of releases. A brief description of the methods and equipment to assess releases of radioactive materials.

7. Responsibilities. A brief description of the responsibilities of licensee personnel should an accident occur, including identification of personnel responsible for promptly notifying offsite response organizations and the agency; also, responsibilities for developing, maintaining, and updating the plan.

8. Notification and coordination. A commitment to and a brief description of the means to promptly notify offsite response organizations and request offsite assistance, including medical assistance for the treatment of contaminated injured onsite workers when appropriate. A control point must be established. The notification and coordination must be planned so that unavailability of some equipment will not prevent the notification and coordination. The licensee shall also commit to notify the agency immediately after notification of the appropriate offsite response organizations and not later than one hour after the licensee declares an emergency.

9. Information to be communicated. A brief description of the types of information of facility status, radioactive releases, and recommended protective actions, if necessary, to be given to offsite response organizations and to the agency.

10. Training. A brief description of the frequency, performance objectives and plans for the training that the licensee will provide workers on how to respond to an emergency including any special instructions and orientation tours the licensee would offer to fire, police, medical, and other emergency personnel. The training shall familiarize personnel with site-specific emergency procedures. Also, the training shall thoroughly prepare site personnel for their responsibilities in the event of accident scenarios postulated as most probable for the specific site, including the use of team training for such scenarios.

11. Safe shutdown. A brief description of the means of restoring the facility to a safe condition after an accident.

12. Exercises. Provisions for conducting quarterly communications checks with offsite response organizations and biennial onsite exercises to test response to simulated emergencies. Quarterly communications checks with offsite response organizations must include the check and update of all necessary telephone numbers. The licensee shall invite offsite response organizations to participate in the biennial exercises. Participation of offsite response organizations in biennial exercises although recommended is not required. Exercises must use accident scenarios postulated as most probable for the specific site and the scenarios shall not be known to most exercise participants. The licensee shall critique each exercise using individuals not having direct implementation responsibility for the plan. Critiques of exercises must evaluate the appropriateness of the plan, emergency procedures, facilities, equipment, training of personnel, and overall effectiveness of the response. Deficiencies found by the critiques must be corrected.

13. Hazardous chemicals. A certification that the applicant has met its responsibilities under the Emergency Planning and Community Right-to-Know Act of 1986, Title III, Pub.L.No. 99-499, if applicable to the applicant's activities at the proposed place of use of the radioactive material.

(4) The licensee shall allow the offsite response organizations expected to respond in case of an accident 60 days to comment on the licensee's emergency plan before submitting it to the agency. The licensee shall provide any comments received within the 60 days to the agency with the emergency plan.

g. (1) Except as provided in 39.4(24)*"g"*(2), (3), and (4), an application for a specific license to use radioactive material in the form of a sealed source or in a device that contains the sealed source must either:

1. Identify the source or device by manufacturer and model number as registered with the Nuclear Regulatory Commission under 10 CFR 32.210 or with an agreement state, or for a source or a device containing radium-226 or accelerator-produced radioactive material as registered with a state under provisions comparable to 10 CFR 32.210; or

2. Contain the information identified in 10 CFR 32.210(c).

(2) For sources or devices manufactured prior to November 5, 2014, that are not registered with the Nuclear Regulatory Commission under 10 CFR 32.210 or with an agreement state, and for which the applicant is unable to provide all the categories of information specified in 10 CFR 32.210(c), the application must include:

1. All available information identified in 10 CFR 32.210(c) concerning the source and, if applicable, the device; and

2. Sufficient additional information to demonstrate that there is reasonable assurance that the radiation safety properties of the source or device are adequate to protect health and minimize danger to life and property. Such information must include a description of the source or device, a description of radiation safety features, the intended use and associated operating experience, and the results of a current leak test.

(3) For sealed sources and devices allowed to be distributed without registration of safety information in accordance with 10 CFR 32.210(g)(1), the applicant may supply only the manufacturer, model number, and radionuclide and quantity.

(4) If it is not feasible to identify each sealed source and device individually, the applicant may propose constraints on the number and type of sealed sources and devices to be used and the conditions under which they will be used, in lieu of identifying each sealed source and device.

h. An application from a medical facility or an educational institution to produce positron emission tomography (PET) radioactive drugs for noncommercial transfer to licensees in the facility's or educational institution's consortium authorized for medical use under 641—41.2(136C) or equivalent NRC or agreement state requirements shall include:

(1) A request for authorization for the production of PET radionuclides or evidence of an existing license issued under this chapter or equivalent NRC or agreement state requirements for a PET production facility within its consortium from which it receives PET radionuclides.

(2) Evidence that the applicant is qualified to produce radioactive drugs for medical use by meeting one of the criteria in 39.4(29)*"j"*(1)"2."

(3) Identification of the individual(s) authorized to prepare the PET radioactive drugs if the applicant is a pharmacy, and documentation that each individual meets the requirements of an authorized nuclear pharmacist as specified in 39.4(29)*"j"*(2)"2."

(4) Information identified in 39.4(29)*"j"*(1)"3" on the PET drugs to be noncommercially transferred to members of the facility's consortium.

39.4(25) *General requirements for the issuance of specific licenses.* A license application will be approved if the agency determines that:

a. The applicant is qualified by reason of training and experience to use the material in question for the purpose requested in accordance with 641—Chapters 38, 39, 40, 41 and 45 in such a manner as to minimize danger to public health and safety or property;

b. The applicant's proposed equipment, facilities, and procedures are adequate to minimize danger to public health and safety or property;

c. The issuance of the license will not be inimical to the health and safety of the public; and

d. The applicant satisfies any applicable special requirements in 39.4(26), 39.4(27), 39.4(28), 641—41.2(136C), or 641—Chapter 45.

e. In the case of an application for a license to receive and possess radioactive material for commercial waste disposal by land burial, or for the conduct of any other activity which the agency determines will significantly affect the quality of the environment, the agency, before commencement

of construction of the plant or facility in which the activity will be conducted, has concluded, after weighing the environmental, economic, technical and other benefits against environmental costs and considering available alternatives, that the action called for is the issuance of the proposed license, with any appropriate conditions to protect environmental values. Commencement of construction prior to such conclusion shall be grounds for denial of a license to receive and possess radioactive material in such plant or facility. As used in this paragraph, the term "commencement of construction" means any clearing of land, excavation, or other substantial action that would adversely affect the environment of a site. The term does not mean site exploration, necessary roads for site exploration, borings to determine foundation conditions, or other preconstruction monitoring or testing to establish background information related to the suitability of the site or the protection of environmental values.

39.4(26) *Financial assurance and record keeping for decommissioning.*

a. Each applicant for a specific license authorizing the possession and use of unsealed radioactive material of half-life greater than 120 days and in quantities exceeding $1.0E^5$ times the applicable quantities set forth in Appendix F of 641—Chapter 40 shall submit a decommissioning funding plan as described in 39.4(26)*"e."* The decommissioning funding plan must also be submitted when a combination of isotopes is involved if R divided by 10^5 is greater than 1 (unity rule), where R is defined here as the sum of the ratios of the quantity of each isotope to the applicable value in Appendix F.

b. (1) Each holder of or applicant for a specific license authorizing possession and use of sealed sources or plated foils of half-life greater than 120 days and in quantities exceeding 10^{12} times the applicable quantities set forth in 39.4(26)*"d"* (or when a combination of isotopes is involved if R, as defined in 39.4(26)*"a,"* divided by 10^{12} is greater than 1) shall submit a decommissioning funding plan as described in 39.4(26)*"e."*

(2) Each applicant for a specific license authorizing possession and use of radioactive material of half-life greater than 120 days and in quantities specified in 39.4(26)*"d"* shall either:

1. Submit a decommissioning funding plan as described in 39.4(26)*"e"*; or

2. Submit a certification that financial assurance for decommissioning has been provided in the amount prescribed by 39.4(26)*"d"* using one of the methods described in 39.4(26)*"f."* For an applicant, this certification may state that the appropriate assurance will be obtained after the application has been approved and the license issued but prior to the receipt of licensed material. If the applicant defers execution of the financial instrument until after the license has been issued, a signed original of the financial instrument obtained to satisfy the requirements of 39.4(26)*"f"* must be submitted before receipt of licensed material. If the applicant does not defer execution of the financial instrument, the applicant shall submit, as part of the certification, a signed original of the financial instrument obtained to satisfy the requirements of 39.4(26)*"f."*

c. (1) Each holder of a specific license issued on or after July 1, 1993, which is of a type described in 39.4(26)*"a"* or *"b,"* shall provide financial assurance for decommissioning in accordance with the criteria set forth in this subrule.

(2) Each holder of a specific license issued before July 1, 1993, and of a type described in 39.4(26)*"a,"* shall submit, on or before January 1, 2007, a decommissioning funding plan or a certification of financial assurance for decommissioning in an amount at least equal to $1,125,000 in accordance with the criteria set forth in this subrule. If the licensee submits the certification of financial assurance rather than a decommissioning funding plan at this time, the licensee shall include a decommissioning funding plan in any application for license renewal.

(3) Each holder of a specific license issued before September 30, 1992, and of a type described in 39.4(36)*"b,"* shall submit, on or before July 1, 1993, a certificate of financial assurance for decommissioning or a decommissioning funding plan in accordance with the criteria set forth in this subrule.

(4) Any licensee who submitted an application before July 1, 2003, for renewal of license shall provide financial assurance for decommissioning in accordance with 39.4(26)*"a"* and *"b."*

(5) Waste collectors and waste processors must provide financial assurance in an amount based on a decommissioning funding plan as described in 39.4(26)*"e."* The decommissioning funding plan must include the cost of disposal of the maximum amount (curies) of radioactive material permitted by license,

and the cost of disposal of the maximum quantity, by volume, of radioactive material which could be present at the licensee's facility at any time, in addition to the cost to remediate the licensee's site to meet the license termination criteria of 641—Chapters 39 and 40.

(6) If, in surveys made under 641—subrule 40.36(1), residual radioactivity in the facility and the environment, including the subsurface, is detected at levels that would, if left uncorrected, prevent the site from meeting the 641—40.29(136C) criteria for unrestricted use, the licensee must submit a decommissioning funding plan within one year of when the survey is completed.

d. Table of required amounts of financial assurance for decommissioning by quantity of material.

Greater than 10^4 but less than or equal to 10^5 times the applicable quantities of Appendix F of 641—Chapter 40 in unsealed form. (For a combination of isotopes, if R, as defined in 39.4(26)*"a,"* divided by 10^4 is greater than 1, but R divided by 10^5 is less than or equal to 1.) 1,125,000

Greater than 10^3 but less than or equal to 10^4 times the applicable quantities of Appendix F of 641—Chapter 40 in unsealed form. (For a combination of isotopes, if R, as defined in 39.4(26)*"a,"* divided by 10^3 is greater than 1, but R divided by 10^4 is less than or equal to 1.) 225,000

Greater than 10^{10} but less than or equal to 10^{12} times the applicable quantities of Appendix F or 641—Chapter 40 in sealed sources or plated foils. (For a combination of isotopes, if R, as defined in 39.4(26)*"a,"* divided by 10^{10} is greater than 1, but R divided by 10^{12} is less than or equal to 1.) 113,000

Licensees having possession limits exceeding the upper bounds of this table must base financial assurance on a decommissioning funding plan

e. (1) Each decommissioning funding plan must be submitted for review and approval and must contain:

1. A detailed cost estimate for decommissioning, in an amount reflecting:

- The cost of an independent contractor to perform all decommissioning activities;
- The cost of meeting the 641—40.29(136C) criteria for unrestricted use, provided that, if the applicant or licensee can demonstrate its ability to meet the provisions of 641—40.30(136C), the cost estimate may be based on meeting the 641—40.30(136C) criteria;
- The volume of onsite subsurface material containing residual radioactivity that will require remediation to meet the criteria for license termination; and
- An adequate contingency factor;

2. Identification of and justification for using the key assumptions contained in the decommissioning cost estimate (DCE);

3. A description of the method of assuring funds for decommissioning from 39.4(26)*"f,"* including means for adjusting cost estimates and associated funding levels periodically over the life of the facility;

4. A certification by the licensee that financial assurance for decommissioning has been provided in the amount of the cost estimate for decommissioning; and

5. A signed original of the financial instrument obtained to satisfy the requirements of 39.4(26)*"f"* (unless a previously submitted and accepted financial instrument continues to cover the cost estimate for decommissioning).

(2) At the time of license renewal and at intervals not to exceed three years, the decommissioning funding plan must be resubmitted with adjustments as necessary to account for changes in costs and the extent of contamination. If the amount of financial assurance will be adjusted downward, this cannot be

done until the updated decommissioning funding plan is approved. The decommissioning funding plan must update the information submitted with the original or prior approved plan, and must specifically consider the effect of the following events on decommissioning costs:

1. Spills of radioactive material producing additional residual radioactivity in onsite subsurface material;
2. Waste inventory increasing above the amount previously estimated;
3. Waste disposal costs increasing above the amount previously estimated;
4. Facility modifications;
5. Changes in authorized possession limits;
6. Actual remediation costs that exceed the previous cost estimate;
7. Onsite disposal; and
8. Use of a settling pond.

f. The financial instrument must include the licensee's name, license number, and the name, address, and other contact information of the issuer, and, if a trust is used, the trustee. When any of the foregoing information changes, the licensee must, within 30 days, submit financial instruments reflecting such changes. The financial instrument submitted must be a signed original or signed original duplicate, except where a copy of the signed original is specifically permitted. Financial assurance for decommissioning must be provided by one or more of the following methods:

(1) Prepayment. Prepayment is the deposit prior to the start of operation into an account segregated from licensee assets and outside the licensee's administrative control of cash or liquid assets such that the amount of funds would be sufficient to pay decommissioning costs. Prepayment may be in the form of a trust, escrow account, government fund, certificate of deposit, or deposit of government securities.

(2) A surety method, insurance, or other guarantee method. These methods guarantee that decommissioning costs will be paid should the licensee default. A surety method may be in the form of a surety bond, letter of credit, or line of credit. A parent company guarantee of funds for decommissioning costs based on a financial test may be used if the guarantee and test are as contained in Appendix F of this chapter. A parent company guarantee may not be used in combination with other financial methods to satisfy the requirements of this subrule. For commercial corporations that issue bonds, a guarantee of funds by the applicant or licensee for decommissioning costs based on a financial test may be used if the guarantee and test are as contained in Appendix H of this chapter. For commercial companies that do not issue bonds, a guarantee of funds by the applicant or licensee for decommissioning costs may be used if the guarantee and test are as contained in Appendix I of this chapter. For nonprofit entities, such as colleges, universities, and nonprofit hospitals, a guarantee of funds by the applicant or licensee may be used if the guarantee and test are as contained in Appendix J of this chapter. A guarantee by the applicant or licensee may not be used in combination with any other financial methods used to satisfy the requirements of paragraph 39.4(26)*"f"* or in any situation where the applicant or licensee has a parent company holding majority control of the voting stock of the company. Any surety method or insurance used to provide financial assurance for decommissioning must contain the following conditions:

1. The surety method or insurance must be open-ended or, if written for a specified term, such as five years, must be renewed automatically unless 90 days or more prior to the renewal date, the issuer notifies the agency, the beneficiary, and the licensee of its intention not to renew. The surety method or insurance must also provide that the full face amount be paid to the beneficiary automatically prior to the expiration without proof of forfeiture if the licensee fails to provide a replacement acceptable to the agency within 30 days after receipt of notification of cancellation.

2. The surety method or insurance must be payable to a trust established for decommissioning costs. The trustee and trust must be acceptable to the agency. An acceptable trustee includes an appropriate state or federal government agency or an entity which has authority to act as a trustee and whose trust operations are regulated and examined by a federal or state agency.

3. The surety method or insurance must remain in effect until the agency has terminated the license.

(3) An external sinking fund in which deposits are made at least annually, coupled with a surety method or insurance, the value of which may decrease by the amount being accumulated in the sinking fund. An external sinking fund is a fund established and maintained by setting aside funds periodically in an account segregated from licensee assets and outside the licensee's administrative control in which the total amount of funds would be sufficient to pay decommissioning costs at the time termination of operation is expected. An external sinking fund may be in the form of a trust, escrow account, government fund, certificate of deposit, or deposit of government securities. The surety or insurance provisions must be as stated in 39.4(26)*"f"*(2).

(4) In the case of federal, state, or local government licensees, a statement of intent containing a cost estimate for decommissioning or an amount based on the table in 39.4(26)*"d,"* and indicating that funds for decommissioning will be obtained when necessary.

(5) When a governmental entity assumes custody and ownership of a site, an arrangement that is deemed acceptable by such governmental entity.

g. Each person licensed under this chapter shall keep records of information important to the safe and effective decommissioning of the facility in an identified location until the license is released for unrestricted use. Before licensed activities are transferred or assigned to another licensee, the licensee shall transfer all records described in this subrule to the new licensee. In this case, the new licensee will be responsible for maintaining these records until the license is terminated. If records of relevant information are kept for other purposes, reference to these records and their locations may be used. Information the agency considers important to decommissioning consists of:

(1) Records of spills or other unusual occurrences involving the spread of contamination in and around the facility, equipment, or site. These records may be limited to instances when contamination remains after any cleanup procedures or when there is reasonable likelihood that contaminants may have spread to inaccessible areas as in the case of possible seepage into porous materials such as concrete. These records must include any known information on identification of involved nuclides, quantities, forms, and concentrations.

(2) As-built drawings and modifications of structures and equipment in restricted areas where radioactive materials are used, stored, or both, and of locations of possible inaccessible contamination such as buried pipes which may be subject to contamination. If required drawings are referenced, each relevant document need not be indexed individually. If drawings are not available, the licensee shall substitute appropriate records of available information concerning these areas and locations.

(3) Records of the cost estimate performed for the decommissioning funding plan or of the amount certified for decommissioning, and records of the funding method used for assuring funds if either a funding plan or certification is used.

(4) Except for areas containing only sealed sources (provided the sources have not leaked or no contamination remains after any leak) or byproduct materials having only half-lives of less than 65 days, a list contained in a single document and updated every two years, of the following:

1. All areas designated as restricted areas as defined under 641—38.2(136C);
2. All areas outside of restricted areas that require documentation under 641—39.4(26)*"g"*(1);
3. All areas outside of restricted areas where current and previous wastes have been buried as documented under 641—40.88(136C); and
4. All areas outside of restricted areas which contain material such that, if the license expired, the licensee would be required to either decontaminate the area to unrestricted release levels or apply for approval for disposal in accordance with 641—40.71(136C).

39.4(27) *Special requirements for issuance of certain specific licenses for radioactive material.*

a. to *d.* Reserved.

e. Use of sealed sources in industrial radiography. In addition to the requirements set forth in 39.4(25), a specific license for use of sealed sources in industrial radiography will be issued if the application contains:

(1) A schedule or description of the program for training radiographic personnel which specifies:

1. Initial training,
2. Periodic training,

3. On-the-job training, and

4. Methods to be used by the licensee to determine the knowledge, understanding, and ability of radiographic personnel to comply with agency rules, licensing requirements, and the operating and emergency procedures of the applicant;

(2) Written operating and emergency procedures, including all items listed in Appendix D of 641—Chapter 45;

(3) A description of the internal inspection system or other management control to ensure that radiographic personnel follow license provisions, rules of the agency, and the applicant's operating and emergency procedures;

(4) A list of permanent radiographic installations and descriptions of permanent storage and use locations. Radioactive material shall not be stored at a permanent storage location or used at a permanent use location unless such storage or use location is specifically authorized by the license. A storage or use location is permanent if radioactive material is stored at the location for more than 90 days and any of the following applies to the location:

1. Non-wireless telephone service is established by the licensee;

2. Industrial radiographic services are advertised for or from the location;

3. Industrial radiographic operations are conducted at other sites due to arrangements made from the location;

(5) A description of the organization of the industrial radiographic program, including delegations of authority and responsibility for operation of the radiation safety program;

(6) A description of the program for inspection and maintenance of radiographic exposure devices and transport and storage containers (including applicable items in 641—subrule 45.1(8) and 641—Chapter 45, Appendix A); and

(7) If a license application includes underwater radiography, a description of:

1. Radiation safety procedures and radiographer responsibilities unique to the performance of underwater radiography;

2. Radiographic equipment and radiation safety equipment unique to underwater radiography; and

3. Methods for gas-tight encapsulation of equipment;

(8) If a license application includes offshore platform or lay-barge radiography, a description of:

1. Transport procedures for radioactive material to be used in industrial radiographic operations;

2. Storage facilities for radioactive material; and

3. Methods for restricting access to radiation areas.

39.4(28) *Special requirements for specific licenses of broad scope.* This subrule prescribes requirements for the issuance of specific licenses of broad scope for radioactive material and certain rules governing holders of such licenses. Authority to transfer possession or control by the manufacturer, processor, or producer of any equipment, device, commodity, or other product containing by-product material whose subsequent possession, use, transfer, and disposal by all other persons are exempted from regulatory requirements may be obtained only from the U.S. Nuclear Regulatory Commission, Washington, D.C. 20555.

a. The different types of broad scope licenses are set forth below:

(1) A "Type A specific license of broad scope" is a specific license authorizing receipt, acquisition, ownership, possession, use and transfer of any chemical or physical form of the radioactive material specified in the license, but not exceeding quantities specified in the license, for any authorized purpose. The quantities specified are usually in the multicurie range.

(2) A "Type B specific license of broad scope" is a specific license authorizing receipt, acquisition, ownership, possession, use and transfer of any chemical or physical form of radioactive material specified in Appendix D of this chapter, for any authorized purpose. The possession limit for a Type B license of broad scope, if only one radionuclide is possessed thereunder, is the quantity specified for that radionuclide in Appendix D, Column I. If two or more radionuclides are possessed thereunder, the possession limit for each is determined as follows: for each radionuclide, determine the ratio of the quantity possessed to the applicable quantity specified in Appendix D, Column I, for that radionuclide. The sum of the ratios for all radionuclides possessed under the license shall not exceed unity.

(3) A "Type C specific license of broad scope" is a specific license authorizing receipt, acquisition, ownership, possession, use, and transfer of any chemical or physical form of radioactive material specified in Appendix D of this chapter, for any authorized purpose. The possession limit for a Type C license of broad scope, if only one radionuclide is possessed thereunder, is the quantity specified for that radionuclide in Appendix D, Column II. If two or more radionuclides are possessed thereunder, the possession limit is determined for each as follows: for each radionuclide, determine the ratio of the quantity possessed to the applicable quantity specified in Appendix D, Column II, for that radionuclide. The sum of the ratios for all radionuclides possessed under the license shall not exceed unity.

b. An application for a Type A specific license of broad scope will be approved if:

(1) The applicant satisfies the general requirements specified in 39.4(25);

(2) The applicant has engaged in a reasonable number of activities involving the use of radioactive material; and

(3) The applicant has established administrative controls and provisions relating to organization and management, procedures, record keeping, material control and accounting, and management review that are necessary to ensure safe operations, including:

1. The establishment of a radiation safety committee composed of such persons as a radiation safety officer, a representative of management, and persons trained and experienced in the safe use of radioactive material;

2. The appointment of a radiation safety officer who is qualified by training and experience in radiation protection, and who is available for advice and assistance on radiation safety matters; and

3. The establishment of appropriate administrative procedures to ensure:

- Control of procurement and use of radioactive material;
- Completion of safety evaluations of proposed uses of radioactive material which take into consideration such matters as the adequacy of facilities and equipment, training and experience of the user, and the operating or handling procedures; and
- Review, approval, and recording by the radiation safety committee of safety evaluations of proposed uses prepared in accordance with 39.4(28)*"b"*(3)"3" prior to use of the radioactive material.

c. An application for a Type B specific license of broad scope will be approved if:

(1) The applicant satisfies the general requirements specified in 39.4(25); and

(2) The applicant has established administrative controls and provisions relating to organization and management, procedures, record keeping, material control and accounting, and management review that are necessary to ensure safe operations, including:

1. The appointment of a radiation safety officer who is qualified by training and experience in radiation protection, and who is available for advice and assistance on radiation safety matters, and

2. The establishment of appropriate administrative procedures to ensure:

- Control of procurement and use of radioactive material;
- Completion of safety evaluations of proposed uses of radioactive material which take into consideration such matters as the adequacy of facilities and equipment, training and experience of the user, and the operating or handling procedures; and
- Review, approval, and recording by the radiation safety officer of safety evaluations of proposed uses prepared in accordance with 39.4(28)*"c"*(2)"2" prior to use of the radioactive material.

d. An application for a Type C specific license of broad scope will be approved if:

(1) The applicant satisfies the general requirements specified in 39.4(25).

(2) The applicant submits a statement that radioactive material will be used only by, or under the direct supervision of, individuals who have received:

1. A college degree at the bachelor level, or equivalent training and experience, in the physical or biological sciences or in engineering; and

2. At least 40 hours of training and experience in the safe handling of radioactive material, and in the characteristics of ionizing radiation, units of radiation dose and quantities, radiation detection instrumentation, and biological hazards of exposure to radiation appropriate to the type and forms of radioactive material to be used.

(3) The applicant has established administrative controls and provisions relating to procurement of radioactive material, procedures, record keeping, material control and accounting, and management review necessary to ensure safe operations.

e. Specific licenses of broad scope are subject to the following conditions:

(1) Unless specifically authorized, persons licensed pursuant to 39.4(28) shall not:

1. Conduct tracer studies in the environment involving direct release of radioactive material;

2. Receive, acquire, own, possess, use, or transfer devices containing 100,000 curies (3.7 PBq) or more of radioactive material in sealed sources used for irradiation of materials;

3. Conduct activities for which a specific license issued by the agency under 39.4(27), 39.4(29) or 641—41.2(136C) is required; or

4. Add or cause the addition of radioactive material to any food, beverage, cosmetic, drug, or other product designed for ingestion or inhalation by, or application to, a human being.

(2) Each Type A specific license of broad scope issued under this chapter shall be subject to the condition that radioactive material possessed under the license may only be used by, or under the direct supervision of, individuals approved by the licensee's radiation safety committee.

(3) Each Type B specific license of broad scope issued under this chapter shall be subject to the condition that radioactive material possessed under the license may only be used by, or under the direct supervision of, individuals approved by the licensee's radiation safety officer.

(4) Each Type C specific license of broad scope issued under this chapter shall be subject to the condition that radioactive material possessed under the license may only be used by, or under the direct supervision of, individuals who satisfy the requirements of 39.4(28)*"d."*

39.4(29) *Special requirements for a specific license to manufacture, assemble, repair, or distribute commodities, products, or devices which contain radioactive material.*

a. Rescinded IAB 7/29/09, effective 9/2/09.

b. Rescinded IAB 3/30/05, effective 5/4/05.

c. Rescinded IAB 7/29/09, effective 9/2/09.

d. Licensing the manufacture and distribution of devices to persons generally licensed under 39.4(22)*"d."*

(1) An application for a specific license to manufacture or initially transfer devices containing radioactive material, excluding special nuclear material, to persons generally licensed under 39.4(22)*"d"* or equivalent regulations of the NRC, an agreement state, or a licensing state will be approved if:

1. The applicant satisfies the general requirements of 39.4(25);

2. The applicant submits sufficient information relating to the design, manufacture, prototype testing, quality control, labels, proposed uses, installation, servicing, leak testing, operating and safety instructions, and potential hazards of the device to provide reasonable assurance that:

- The device can be safely operated by persons not having training in radiological protection,
- Under ordinary conditions of handling, storage, and use of the device, the radioactive material contained in the device will not be released or inadvertently removed from the device, and it is unlikely that any person will receive in any period of one year a dose in excess of 10 percent of the annual limits specified in 641—40.15(136C); and
- Under accident conditions such as fire and explosion associated with handling, storage, and use of the device, it is unlikely that any person would receive an external radiation dose or dose commitment in excess of the following organ doses:

Whole body; head and trunk; active blood-forming organs; gonads; or lens of eye . . . . . 15 rems (150 mSv)

Hands and forearms; feet and ankles; localized areas of skin averaged over areas no larger than 1 square centimeter . . . . . 200 rems (2 Sv)

Other organs. . . . . 50 rems (500 mSv)

3. Each device bears a durable, legible, clearly visible label or labels approved by the agency, NRC, or agreement state or licensing state, which contains in a clearly identified and separate statement:

- Instructions and precautions necessary to ensure safe installation, operation, and servicing of the device. Documents such as operating and service manuals may be identified in the label and used to provide this information;
- The requirement, or lack of requirement, for leak testing, or for testing any "on-off" mechanism and indicator, including the maximum time interval for such testing, and the identification of radioactive material by isotope, quantity of radioactivity, and date of determination of the quantity; and
- The information called for in one of the following statements, as appropriate, in the same or substantially similar form:

> The receipt, possession, use, and transfer of this device, Model _____, Serial No. _____, (devices licensed prior to January 19, 1975, may bear labels authorized by the rules in effect on January 1, 1975)(the model, serial number, and name of the manufacturer or initial transferor may be omitted from this label provided the information is elsewhere specified in labeling affixed to the device) are subject to a general license or the equivalent and the chapter of the U.S. Nuclear Regulatory Commission or a state with which the U.S. Nuclear Regulatory Commission has entered into an agreement for the exercise of regulatory authority. This label shall be maintained on the device in a legible condition. Removal of this label is prohibited.
>
> CAUTION—RADIOACTIVE MATERIAL
>
> _____
>
> Name of manufacturer or initial transferor

4. Each device having a separable source housing that provides the primary shielding for the source also bears, on the source housing, a durable label containing the device model number and serial number, the isotope and quantity, the words "Caution—Radioactive Material," the radiation symbol described in 641—subrule 40.60(1), and the name of the manufacturer or initial distributor;

5. Each device meeting the criteria of 39.4(22)*"d"*(3)"13" bears a permanent (e.g., embossed, etched, stamped, or engraved) label affixed to the source housing if separable, or the device if the source housing is not separable, that includes the words, "Caution—Radioactive Material," and, if practicable, the radiation symbol described in 641—subrule 40.60(1); and

6. The device has been registered in the Sealed Source and Device Registry.

(2) In the event the applicant desires that the device be required to be tested at intervals longer than six months, either for proper operation of the "on-off" mechanism and indicator, if any, or for leakage of radioactive material or for both, the applicant shall include in the application sufficient information to demonstrate that such longer interval is justified by performance characteristics of the device or similar devices and by design features which have a significant bearing on the probability or consequences of leakage of radioactive material from the device or failure of the "on-off" mechanism and indicator. In determining the acceptable interval for the test for leakage of radioactive material, the agency will consider information which includes, but is not limited to:

1. Primary containment or source capsule;
2. Protection of primary containment;
3. Method of sealing containment;
4. Containment construction materials;
5. Form of contained radioactive material;
6. Maximum temperature withstood during prototype tests;
7. Maximum pressure withstood during prototype tests;
8. Maximum quantity of contained radioactive material;

9. Radiotoxicity of contained radioactive material; and

10. Operating experience with identical devices or similarly designed and constructed devices.

(3) In the event the applicant desires that the general licensee under 39.4(22)*"d,"* or under equivalent regulations of the NRC, an agreement state, or a licensing state be authorized to install the device, collect the sample to be analyzed by a specific licensee for leakage of radioactive material, service the device, test the "on-off" mechanism and indicator, or remove the device from installation, the applicant shall include in the application written instructions to be followed by the general licensee, estimated calendar quarter doses associated with such activity or activities, and bases for such estimates. The submitted information shall demonstrate that performance of such activity or activities by an individual untrained in radiological protection, in addition to other handling, storage, and use of devices under the general license, is unlikely to cause that individual to receive a dose in excess of 10 percent of the annual limits specified in 641—40.15(136C).

(4) Information to be provided before transfer.

1. If a device containing radioactive material is to be transferred for use under the general license contained in 39.4(22)*"d,"* each person that is licensed under 39.4(22)*"d"* shall provide the information specified to each person to whom a device is to be transferred. This information must be provided before the device may be transferred. In the case of a transfer through an intermediate person, the information must also be provided to the intended user prior to initial transfer to the intermediate person. The required information includes:

- A copy of the general license contained in 39.4(22), or if 39.4(22)*"d"*(3)"2," "3," or "4" or 39.4(22)*"d"*(3)"13" does not apply to the particular device, those paragraphs may be omitted;
- A copy of 39.4(20), 39.4(52), 641—40.95(136C), and 641—40.96(136C);
- A list of the services that can only be performed by a specific licensee;
- Information on acceptable disposal options including estimated costs of disposal; and
- An indication that it is the policy of the NRC and this agency to issue high civil penalties for improper disposal.

2. If radioactive material is to be transferred in a device for use under an equivalent general license of the NRC or an agreement state, each person that is licensed under 39.4(29)*"d"* shall provide the information specified in this paragraph to each person to whom a device is to be transferred. In the case of a transfer through an intermediate person, the information must also be provided to the intended user prior to initial transfer to the intermediate person. The required information includes:

- A copy of the NRC or agreement state's rules equivalent to 39.4(29)*"d."* If a copy of the NRC regulations is provided to a prospective general licensee in lieu of the agreement state's regulations, it shall be accompanied by a note explaining that use of the device is regulated by the agreement state; if certain paragraphs of the regulations do not apply to the particular device, those paragraphs may be omitted;
- A list of the services that can only be performed by a specific licensee;
- Information on acceptable disposal options including estimated costs of disposal; and
- The name or title, address, and telephone number of the contact at the agreement state regulatory agency from which additional information may be obtained.

3. An alternative approach to informing customers may be proposed by the licensee for approval by the agency.

4. Each device that is transferred after February 19, 2002, must meet the labeling requirements in 39.4(29)*"d."*

5. If a notification of bankruptcy has been made or the license is to be terminated, each person licensed under 39.4(29)*"d"* shall provide, upon request, to the NRC and to any appropriate agreement state, records of final disposition.

(5) Transfer reports and records. Each person licensed under 39.4(29)*"d"* to initially transfer devices to generally licensed persons shall comply with the requirements of this subparagraph.

1. The person shall report all transfers of devices to persons for use under the general license in 39.4(29)*"d"* and all receipts of devices from persons licensed under 39.4(29)*"d"* to the NRC, this agency, or another agreement state. The report must be submitted on a quarterly basis in a clear and

legible report containing all of the data required in this subrule. The required information for transfers to general licensees includes:

- The identity of each general licensee by name and mailing address for the location of use; if there is no mailing address for the location of use, an alternate address for the general licensee shall be submitted along with information on the actual location of use;
- The name, title, and telephone number of the person identified by the general licensee as having knowledge of and authority to take required actions to ensure compliance with the appropriate rules and requirements;
- The date of transfer;
- The type, model number, and serial number of the device transferred; and
- The quantity and type of radioactive material contained in the device.

2. If one or more intermediate persons will temporarily possess the device at the intended place of use before its possession by the user, the report must include the same information for both the intended user and each intermediate person, and clearly designate the intermediate person(s).

3. For devices received from a general licensee, the report must include the identity of the general licensee by name and address; the type, model number, and serial number of the device received; the date of receipt; and, in the case of devices not initially transferred by the reporting licensee, the name of the manufacturer or initial transferor.

4. If the licensee makes changes to a device possessed by a general licensee, such that the label must be changed to update the required information, the report must identify the general licensee, the device, and the changes to information on the device label.

5. The report must cover each calendar quarter, must be filed within 30 days of the end of the calendar quarter, and must clearly indicate the period covered by the report.

6. The report must clearly identify the specific licensee submitting the report and include the license number of the specific licensee.

7. If no transfers have been made to or from persons generally licensed under 39.4(29)*"d"* during the reporting period, the report must so indicate.

(6) The person shall maintain all information concerning transfers and receipts of devices that supports the reports required by 39.4(29)*"d."* Records required in 39.4(29)*"d"* must be maintained for three years following the date of the recorded event.

e. Special requirements for the manufacture, assembly, or repair of luminous safety devices for use in aircraft. An application for a specific license to manufacture, assemble, or repair luminous safety devices containing tritium or promethium-147 for use in aircraft, for distribution to persons generally licensed under 39.4(22)*"e,"* will be approved if:

(1) The applicant satisfies the general requirements specified in 39.4(25); and

(2) The applicant satisfies the requirements of Sections 32.53, 32.54, 32.55, and 32.56 of 10 CFR Part 32, or their equivalent.

f. An application for a specific license to manufacture or initially transfer calibration or reference sources containing americium-241 or radium-226 for distribution to persons generally licensed under 39.4(22)*"g"* will be approved if:

(1) The applicant satisfies the general requirements of 39.4(25); and

(2) The applicant satisfies the requirements of Sections 32.57, 32.58, and 32.59 of 10 CFR Part 32, or their equivalent.

g. Reserved.

h. Manufacture and distribution of radioactive material for certain in vitro clinical or laboratory testing under general license. An application for a specific license to manufacture or distribute radioactive material for use under the general license of 39.4(22)*"i"* will be approved if:

(1) The applicant satisfies the general requirements specified in 39.4(25).

(2) The radioactive material is to be prepared for distribution in prepackaged units of:

1. Carbon-14 in units not exceeding 10 microcuries (370 kBq) each.
2. Hydrogen-3 (tritium) in units not exceeding 50 microcuries (1.85 MBq) each.
3. Iodine-125 in units not exceeding 10 microcuries (370 kBq) each.

4. Mock iodine-125 in units not exceeding 0.05 microcurie (1.85 kBq) of iodine-129 and 0.005 microcurie (185 Bq) of americium-241 each.

5. Iodine-131 in units not exceeding 10 microcuries (370 kBq) each.

6. Iron-59 in units not exceeding 20 microcuries (740 kBq) each.

7. Selenium-75 in units not exceeding 10 microcuries (370 kBq) each.

8. Cobalt-57 in units not exceeding 10 microcuries (370 kBq) each.

(3) Each prepackaged unit bears a durable, clearly visible label:

1. Identifying the radioactive contents as to chemical form and radionuclide, and indicating that the amount of radioactivity does not exceed 10 microcuries (370 kBq) of iodine-125, iodine-131, carbon-14, cobalt-57, or selenium-75; 50 microcuries (1.85 MBq) of hydrogen-3 (tritium); 20 microcuries (740 kBq) of iron-59; or mock iodine-125 in units not exceeding 0.05 microcurie (1.85 kBq) of iodine-129 and 0.005 microcurie (185 Bq) of americium-241 each; and

2. Displaying the radiation caution symbol described in 641—subrule 40.60(1) and the words, "CAUTION—RADIOACTIVE MATERIAL," and "Not for Internal or External Use in Humans or Animals."

(4) One of the following statements, as appropriate, or a substantially similar statement which contains the information called for in one of the following statements, appears on a label affixed to each prepackaged unit or appears in a leaflet or brochure which accompanies the package:

1. This radioactive material may be received, acquired, possessed, and used only by physicians, veterinarians, clinical laboratories or hospitals and only for in vitro clinical or laboratory tests not involving internal or external administration of the material, or the radiation therefrom, to human beings or animals. Its receipt, acquisition, possession, use, and transfer are subject to the regulations and a general license of the U.S. Nuclear Regulatory Commission or an agreement state.

_____

Name of manufacturer

2. Rescinded IAB 3/30/05, effective 5/4/05.

(5) The label affixed to the unit, or the leaflet or brochure which accompanies the package, contains adequate information as to the precautions to be observed in handling and storing such radioactive material. In the case of the mock iodine-125 reference or calibration source, the information accompanying the source must also contain directions to the licensee regarding the waste disposal requirements set out in 641—subrule 40.70(1).

i. An application for a specific license to manufacture or initially transfer ice detection devices containing strontium-90 to persons generally licensed under 39.4(22)*"j"* will be approved if the applicant satisfies the general requirements of 39.4(25) and the requirements of Sections 32.61 and 32.62 of 10 CFR Part 32, or their equivalent.

j. Manufacture, preparation, or transfer for commercial distribution of radioactive drugs containing by-product material for medical use under 641—41.2(136C).

(1) An application for a specific license to manufacture, prepare, or transfer for commercial distribution radioactive drugs containing by-product material for use by persons authorized pursuant to 641—41.2(136C) will be approved if:

1. The applicant satisfies the general requirements specified in subrule 39.4(25);

2. The applicant submits evidence that the applicant is at least one of the following:

- Registered with the U.S. Food and Drug Administration (FDA) as the owner or operator of a drug establishment that engages in the manufacture, preparation, propagation, compounding, or processing of a drug under 21 CFR 207.20(a);
- Registered or licensed with a state agency as a drug manufacturer;
- Licensed by the Iowa board of pharmacy as a nuclear pharmacy;
- Operating as a nuclear pharmacy within a federal medical institution; or
- A positron emission tomography (PET) drug production facility registered or licensed with a state agency;

3. The applicant submits information on the radionuclide: the chemical and physical form; the maximum activity per vial, syringe, generator, or other container of the radioactive drug; the shielding provided by the packaging to show it is appropriate for the safe handling and storage of the radioactive drugs by medical use licensees; and

4. The applicant satisfies the following labeling requirements:

- A label is affixed to each transport radiation shield, whether it is constructed of lead, glass, plastic, or other material, of a radioactive drug to be transferred for commercial distribution. The label must include the radiation symbol and the words "CAUTION, RADIOACTIVE MATERIAL" or "DANGER, RADIOACTIVE MATERIAL"; the name of the radioactive drug or its abbreviation; and the quantity of radioactivity at a specified date and time. For radioactive drugs with a half-life greater than 100 days, the time may be omitted.
- A label is affixed to each syringe, vial, or other container used to hold a radioactive drug to be transferred for commercial distribution. The label must include the radiation symbol and the words "CAUTION, RADIOACTIVE MATERIAL" or "DANGER, RADIOACTIVE MATERIAL" and an identifier that ensures that the syringe, vial, or other container can be correlated with the information on the transport radiation shield label.

(2) A licensee as described by 39.4(29)*"j"*(1)"2":

1. May prepare radioactive drugs for medical use, as defined in 641—38.2(136C), provided that the radioactive drug is prepared by either an authorized nuclear pharmacist, as specified in 39.4(29)*"j"*(2)"2" and 39.4(29)*"j"*(2)"3" or an individual under the supervision of an authorized nuclear pharmacist as specified in 641—paragraph 41.2(11)*"c."*

2. May allow a pharmacist to work as an authorized nuclear pharmacist if:

- This individual qualifies as an authorized nuclear pharmacist as defined in 641—subrule 41.2(2),
- This individual meets the requirements specified in 641—subrules 41.2(77) and 41.2(78) and the licensee has received an approved license amendment identifying this individual as an authorized nuclear pharmacist, or
- This individual is designated as an authorized nuclear pharmacist in accordance with 39.4(29)*"j"*(2)"3."

3. May designate a pharmacist (as defined in 641—subrule 41.2(2)) as an authorized nuclear pharmacist if the individual was a nuclear pharmacist preparing only radioactive drugs containing accelerator-produced radioactive material and the individual practiced at a pharmacy at a government agency or federally recognized Indian tribe before November 30, 2007, or at all other pharmacies before August 8, 2009, or an earlier date as noticed by the NRC.

4. Shall permit the actions authorized in 39.4(29)*"j"*(2)"1" and "2" that are permitted in spite of more restrictive language in license conditions.

5. Shall provide to the agency a copy of each individual's:

- Certification by a specialty board whose certification process has been recognized by the NRC or an agreement state as specified in 641—paragraph 41.2(78)*"a"* with the written attestation signed by a preceptor as required by 641—paragraph 41.2(78)*"c"*; or
- NRC or agreement state license; or
- NRC master materials licensee permit; or
- Permit issued by a licensee or NRC master materials permittee of broad scope or authorization from a commercial nuclear pharmacy authorized to list its own authorized nuclear pharmacist; or
- Documentation that only accelerator-produced radioactive materials were used in the practice of nuclear pharmacy at a government agency or federally recognized Indian tribe before November 30, 2007, or at all other locations of use before August 8, 2009, or an earlier date as noticed by the NRC; and
- State pharmacy licensure or registration, no later than 30 days after the date that the licensee allows, pursuant to 39.4(29)*"j"*(2)"2," first and third bulleted paragraphs, the individual to work as an authorized nuclear pharmacist.

(3) A licensee shall possess and use instrumentation to measure the radioactivity of radioactive drugs. The licensee shall have procedures for use of the instrumentation. The licensee shall measure, by

direct measurement or by combination of measurements and calculations, the amount of radioactivity in dosages of alpha-, beta-, or photon-emitting radioactive drugs prior to transfer for commercial distribution. In addition, the licensee shall:

1. Perform tests before initial use, periodically, and following repair, on each instrument for accuracy, linearity, and geometry dependence, as appropriate for the use of the instrument, and make adjustments when necessary; and

2. Check each instrument for constancy and proper operation at the beginning of each day of use.

(4) Nothing in this subrule relieves the licensee from complying with applicable FDA, other federal, and state requirements governing radioactive drugs.

k. Manufacture and distribution of generators or reagent kits for preparation of radiopharmaceuticals containing radioactive material. Although the agency does not regulate the manufacture and distribution of reagent kits that do not contain radioactive material, it does regulate the use of such reagent kits for the preparation of radiopharmaceuticals containing radioactive material as part of its licensing and regulation of the users of radioactive material. Any manufacturer of reagent kits that do not contain radioactive material who desires to have their reagent kits approved by the agency for use by persons licensed pursuant to 641—subrule 41.2(33) may submit the pertinent information specified in 39.4(29)*"k."* An application for a specific license to manufacture and distribute generators or reagent kits containing radioactive material for preparation of radiopharmaceuticals by persons licensed pursuant to this chapter for the uses listed in 641—subrule 41.2(33) will be approved if:

(1) The applicant satisfies the general requirements specified in 39.4(25);

(2) The applicant submits evidence that:

1. The generator or reagent kit is to be manufactured, labeled and packaged in accordance with the Federal Food, Drug and Cosmetic Act or the Public Health Service Act, such as a new drug application (NDA) approved by the Food and Drug Administration (FDA), or a "Notice of Claimed Investigational Exemption for a New Drug" (IND) that has been accepted by the FDA, or

2. The manufacture and distribution of the generator or reagent kit are not subject to the Federal Food, Drug and Cosmetic Act and the Public Health Service Act;

(3) The applicant submits information on the radionuclide, chemical and physical form, packaging including maximum activity per package, and shielding provided by the packaging of the radioactive material contained in the generator or reagent kit;

(4) The label affixed to the generator or reagent kit contains information on the radionuclide, quantity, and date of assay; and

(5) The label affixed to the generator or reagent kit, or the leaflet or brochure which accompanies the generator or reagent kit, contains:

1. Adequate information, from a radiation safety standpoint, on the procedures to be followed and the equipment and shielding to be used in eluting the generator or processing radioactive material with the reagent kit, and

2. A statement that this generator or reagent kit, as appropriate, is approved for use by persons licensed by the agency pursuant to 641—subrule 41.2(33) or under equivalent licenses of the U.S. Nuclear Regulatory Commission, an agreement state, or a licensing state. The labels, leaflets, or brochures required by 39.4(29)*"k"* are in addition to the labeling required by the Food and Drug Administration (FDA) and they may be separate from or, with the approval of the FDA, may be combined with the labeling required by the FDA.

l. Manufacture and distribution of sources or devices containing radioactive material for medical use.

(1) An application for a specific license to manufacture and distribute sources and devices containing radioactive material to persons licensed pursuant to 641—41.2(136C) for use as a calibration, transmission, or reference source or for the uses listed in 641—subrules 41.2(41), 41.2(43), 41.2(49), and 41.2(88) will be approved if:

1. The applicant satisfies the general requirements in 39.4(25);

2. The applicant submits sufficient information regarding each type of source or device pertinent to an evaluation of its radiation safety, including:

- The radioactive material contained, its chemical and physical form, and amount,
- Details of design and construction of the source or device,
- Procedures for, and results of, prototype tests to demonstrate that the source or device will maintain its integrity under stresses likely to be encountered in normal use and accidents,
- For devices containing radioactive material, the radiation profile of a prototype device,
- Details of quality control procedures to ensure that production sources and devices meet the standards of the design and prototype tests,
- Procedures and standards for calibrating sources and devices,
- Legend and methods for labeling sources and devices as to their radioactive content, and
- Instructions for handling and storing the source or device from the radiation safety standpoint. These instructions are to be included on a durable label attached to the source or device or attached to a permanent storage container for the source or device, provided that instructions which are too lengthy for such label may be summarized on the label and printed in detail on a brochure which is referenced on the label;

3. The label affixed to the source or device, or to the permanent storage container for the source or device, contains information on the radionuclide, quantity, and date of assay, and a statement that the NRC, agreement state, or this agency has approved distribution of the source or device to persons licensed to use by-product material identified in 641—41.2(136C) and 641—subrules 41.2(41) and 41.2(43), as appropriate, and to persons who hold an equivalent license issued by the NRC or an agreement state; and

4. The source or device has been registered in the Sealed Source and Device Registry.

(2) In the event the applicant desires that the source or device be required to be tested for leakage of radioactive material at intervals longer than six months, the applicant shall include in the application sufficient information to demonstrate that such longer interval is justified by performance characteristics of the source or device or similar sources or devices and by design features that have a significant bearing on the probability or consequences of leakage of radioactive material from the source.

(3) In determining the acceptable interval for test of leakage of radioactive material, the agency will consider information that includes, but is not limited to:

1. Primary containment or source capsule,
2. Protection of primary containment,
3. Method of sealing containment,
4. Containment construction materials,
5. Form of contained radioactive material,
6. Maximum temperature withstood during prototype tests,
7. Maximum pressure withstood during prototype tests,
8. Maximum quantity of contained radioactive material,
9. Radiotoxicity of contained radioactive material, and
10. Operating experience with identical sources or devices or similarly designed and constructed sources or devices.

m. Requirements for license to manufacture and distribute industrial products containing depleted uranium for mass-volume applications.

(1) An application for a specific license to manufacture industrial products and devices containing depleted uranium for use pursuant to 39.4(21)*"d"* or equivalent regulations of the U.S. Nuclear Regulatory Commission or an agreement state will be approved if:

1. The applicant satisfies the general requirements specified in 39.4(25);

2. The applicant submits sufficient information relating to the design, manufacture, prototype testing, quality control procedures, labeling or marking, proposed uses, and potential hazards of the industrial product or device to provide reasonable assurance that possession, use, or transfer of the depleted uranium in the product or device is not likely to cause any individual to receive in any period of one calendar quarter a radiation dose in excess of 10 percent of the limits specified in 641—40.15(136C) of these rules; and

3. The applicant submits sufficient information regarding the industrial product or device and the presence of depleted uranium for a mass-volume application in the product or device to provide

reasonable assurance that unique benefits will accrue to the public because of the usefulness of the product or device.

(2) In the case of an industrial product or device whose unique benefits are questionable, the agency will approve an application for a specific license under 39.4(29)*"m"* only if the product or device is found to combine a high degree of utility and low probability of uncontrolled disposal and dispersal of significant quantities of depleted uranium into the environment.

(3) The agency may deny any application for a specific license under 39.4(29)*"m"* if the end use(s) of the industrial product or device cannot be reasonably foreseen.

(4) Each person licensed pursuant to 39.4(29)*"m"*(1) shall:

1. Maintain the level of quality control required by the license in the manufacture of the industrial product or device, and in the installation of the depleted uranium into the product or device;

2. Label or mark each unit to:

- Identify the manufacturer of the product or device and the number of the license under which the product or device was manufactured, the fact that the product or device contains depleted uranium, and the quantity of depleted uranium in each product or device; and
- State that the receipt, possession, use, and transfer of the product or device are subject to a general license or the equivalent and the regulations of the U.S. Nuclear Regulatory Commission or an agreement state;

3. Ensure that the depleted uranium before being installed in each product or device has been impressed with the following legend clearly legible through any plating or other covering: "Depleted Uranium"

4. Furnish a copy of the general license contained in 39.4(21)*"d"* and a copy of the agency form used to register the device to each person to whom the person transfers depleted uranium in a product or device for use pursuant to the general license contained in 39.4(21)*"d,"* or furnish a copy of the general license contained in the U.S. Nuclear Regulatory Commission's or agreement state's regulation equivalent to 39.4(21)*"d"* and a copy of the U.S. Nuclear Regulatory Commission's or agreement state's certificate, or alternatively, furnish a copy of the general license contained in 39.4(21)*"d"* and a copy of the agency form used to register to each person to whom the person transfers depleted uranium in a product or device for use pursuant to the general license of the U.S. Nuclear Regulatory Commission or an agreement state, with a note explaining that use of the product or device is regulated by the U.S. Nuclear Regulatory Commission or an agreement state under requirements substantially the same as those in 39.4(21)*"d"*;

5. Report to the agency all transfers of industrial products or devices to persons for use under the general license in 39.4(21)*"d."* Such report shall identify each general licensee by name and address, an individual by name and position who may constitute a point of contact between the agency and the general licensee, the type and model number of device transferred, and the quantity of depleted uranium contained in the product or device. The report shall be submitted within 30 days after the end of each calendar quarter in which such a product or device is transferred to the generally licensed person. If no transfers have been made to persons generally licensed under 39.4(21)*"d"* during the reporting period, the report shall so indicate;

6. Report to the U.S. Nuclear Regulatory Commission all transfers of industrial products or devices to persons for use under the U.S. Nuclear Regulatory Commission general license in Section 40.25 of 10 CFR Part 40; and shall report to the responsible state agency all transfers of devices manufactured and distributed pursuant to 39.4(29)*"m"* for use under a general license in that state's regulations equivalent to 39.4(21)*"d."* Such report shall identify each general licensee by name and address, an individual by name and position who may constitute a point of contact between the agency and the general licensee, the type and model number of the device transferred, and the quantity of depleted uranium contained in the product or device. The report shall be submitted within 30 days after the end of each calendar quarter in which such product or device is transferred to the generally licensed person. If no transfers have been made to U.S. Nuclear Regulatory Commission licensees during the reporting period, this information shall be reported to the U.S. Nuclear Regulatory Commission. If no transfers have been made to general licensees within a particular agreement state during the reporting

period, this information shall be reported to the responsible agreement state agency upon the request of that agency; and

7. Keep records showing the name, address, and point of contact for each general licensee to whom the person transfers depleted uranium in industrial products or devices for use pursuant to the general license provided in 39.4(21)*"d"* or equivalent regulations of the U.S. Nuclear Regulatory Commission or an agreement state. The records shall be maintained for a period of two years and shall show the date of each transfer, the quantity of depleted uranium in each product or device transferred, and compliance with the report requirements of 641—Chapters 39 and 40.

n. Rescinded IAB 7/29/09, effective 9/2/09.

o. Acceptance sampling procedures under certain specific licenses. A random sample shall be taken from each inspection lot of devices licensed under 39.4(29) for which testing is required and meet the requirements pursuant to 10 CFR 32.110.

39.4(30) Reserved.

39.4(31) *Issuance of specific licenses.*

a. Upon a determination that an application meets the requirements of the Iowa Code and the rules of the agency, the agency will issue a specific license authorizing the proposed activity in such form and containing such conditions and limitations as it deems appropriate or necessary.

b. The agency may incorporate in any license at the time of issuance, or thereafter by appropriate rule, regulation, or order, such additional requirements and conditions with respect to the licensee's receipt, possession, use, and transfer of radioactive material subject to this chapter as it deems appropriate or necessary in order to:

(1) Minimize danger to public health and safety or property;

(2) Require such reports and the keeping of such records, and to provide for such inspections of activities under the license as may be appropriate or necessary; and

(3) Prevent loss or theft of material subject to this chapter.

c. Specific license for industrial radiography. An application for a specific license for the use of licensed material in industrial radiography will be approved if the applicant meets the following requirements:

(1) The applicant satisfies the general requirements specified in 39.4(25).

(2) The applicant submits an adequate program for training radiographers and radiographers' assistants that meets the requirements of 641—subrule 45.1(10).

(3) The applicant submits procedures for verifying and documenting the certification status of radiographers and for ensuring that the certification of individuals acting as radiographers remains valid.

(4) The applicant submits written operating and emergency procedures as described in 641—subrule 45.2(4).

(5) The applicant submits a description of a program for inspections of the job performance of each radiographer and radiographer's assistant at intervals not to exceed six months as described in 641—subrule 45.1(11).

(6) The applicant submits a description of the applicant's overall organizational structure as it applies to the radiation responsibilities in industrial radiography, including specified delegation of authority and responsibility.

(7) The applicant identifies and lists the qualifications of the individual(s) designated as the RSO (641—paragraph 45.1(10)*"d"*) and potential designees responsible for ensuring that the licensee's radiation safety program is implemented in accordance with approved procedures.

(8) If an applicant intends to perform leak testing of sealed sources or exposure devices containing depleted uranium (DU) shielding, the applicant must describe the procedures for performing and the qualifications of the person(s) authorized to do the leak testing. If the applicant intends to analyze its own wipe samples, the application must include a description of the procedures to be followed. The description must include the instruments to be used, methods of performing the analysis, and pertinent experience of the person who will analyze the wipe samples.

(9) If the applicant intends to perform "in-house" calibrations of survey instruments, the applicant must describe the methods to be used and the relevant experience of the person(s) who will perform

the calibrations. All calibrations must be performed according to the procedures described and at the intervals prescribed in 641—subrule 45.1(5).

(10) The applicant identifies and describes the location(s) of all field stations and permanent radiographic installations.

(11) The applicant identifies the locations where all records required by 641—Chapters 38, 39, 40, and 45 will be located.

d. Specific licenses for well logging. The agency will approve an application for a specific license for the use of licensed material in well logging if the applicant meets the following requirements:

(1) The applicant shall satisfy the general requirements specified in 39.4(25) and all other requirements in 641—Chapter 39, as appropriate, and any special requirements contained in 39.4(31)*"d."*

(2) The applicant shall develop a program for training logging supervisors and logging assistants and submit to the agency a description of this program which specifies the following:

1. Initial training;
2. On-the-job training;
3. Annual safety reviews provided by the licensee;
4. The means the applicant will use to demonstrate the logging supervisor's knowledge and understanding of and ability to comply with the agency's regulations and licensing requirements and the applicant's operating and emergency procedures; and
5. The means the applicant will use to demonstrate the logging assistant's knowledge and understanding of and ability to comply with the applicant's operating and emergency procedures.

(3) The applicant shall submit to the agency written operating and emergency procedures as described in 641—subrule 45.6(16) or an outline or summary of the procedures that includes the important radiation safety aspects of the procedures.

(4) The applicant shall establish and submit to the agency its program for annual inspections of the job performance of each logging supervisor to ensure that the agency's regulations and license requirements and the applicant's operating and emergency procedures are followed. Inspection records must be retained for three years after each annual internal inspection.

(5) The applicant shall submit a description of its overall organizational structure as the organizational structure applies to the radiation safety responsibilities in well logging, including specified delegations of authority and responsibility.

(6) If an applicant wants to perform leak testing of sealed sources, the applicant shall identify the manufacturers and the model numbers of the leak test kits to be used. If the applicant wants to analyze its own wipe samples, the applicant shall establish procedures to be followed and submit a description of these procedures to the agency. The description must include the instruments to be used, methods of performing the analysis, and pertinent experience of the person who will analyze the wipe samples.

39.4(32) *Specific terms and conditions of licenses.*

a. Each license issued pursuant to this chapter shall be subject to all the provisions of the Iowa Code, now or hereafter in effect, and to all rules, regulations, and orders of the agency.

b. No license issued or granted under this chapter and no right to possess or utilize radioactive material granted by any license issued pursuant to this chapter shall be transferred, assigned, or in any manner disposed of, either voluntarily or involuntarily, directly or indirectly, through transfer of control of any license to any person unless the agency shall, after securing full information, find that the transfer is in accordance with the provisions of the Iowa Code, now or hereafter in effect, and to all valid rules, regulations, and orders of the agency, and shall give its consent in writing. An application for transfer of license must include:

(1) The identity and technical and financial qualifications of the proposed transferee; and

(2) The financial assurance for decommissioning information required by 39.4(26).

c. Each person licensed by the agency pursuant to this chapter shall confine use and possession of the material licensed to the locations and purposes authorized in the license.

d. Each licensee shall notify the agency in writing when the licensee decides to permanently discontinue all activities involving materials authorized under the license.

e. Each licensee preparing technetium-99m radiopharmaceuticals from molybdenum-99/technetium-99m generators or rubidium-82 from strontium-82/rubidium-82 generators shall test the generator eluates for molybdenum-99 breakthrough or strontium-82 and strontium-85 contamination, respectively, in accordance with 641—subrule 41.2(34). The licensee shall record the results of each test and retain each record for three years after the record is made.

f. Each general licensee that is required to register by 39.4(21) or 39.4(22) and each specific licensee shall notify the agency in writing immediately following the filing of a voluntary or involuntary petition for bankruptcy under any Chapter of Title 11 (Bankruptcy) of the United States Code by or against:

(1) The licensee;

(2) An entity (as that term is defined in 11 U.S.C. 101(15)) controlling the licensee or listing the license or licensee as property of the estate; or

(3) An affiliate (as that term is defined in 11 U.S.C. 101(2)) of the licensee.

The notification specified in 39.4(32)*"f"* shall indicate the bankruptcy court in which the petition for bankruptcy was filed and the date of the filing of the petition.

g. (1) Authorization under 39.4(29)*"h"* to produce positron emission tomography (PET) radioactive drugs for noncommercial transfer to medical use licensees in the licensee's consortium does not relieve the licensee from complying with applicable FDA, other federal, and state requirements governing radioactive drugs.

(2) Each licensee authorized under 39.4(29)*"h"* to produce PET radioactive drugs for noncommercial transfer to medical use licensees in the licensee's consortium shall:

1. Satisfy the labeling requirements in 39.4(29)*"j"*(1)"4" for each PET radioactive drug transport radiation shield and each syringe, vial, or other container used to hold a PET radioactive drug intended for noncommercial distribution to members of the licensee's consortium.

2. Possess and use instrumentation to measure the radioactivity of the PET radioactive drugs intended for noncommercial distribution to members of the licensee's consortium and meet the procedural, radioactivity measurement, instrument test, instrument check, and instrument adjustment requirements in 39.4(29)*"j"*(3).

(3) A licensee that is a pharmacy authorized under 39.4(24)*"h"* to produce PET radioactive drugs for noncommercial transfer to medical use licensees in the pharmacy's consortium shall require that any individual who prepares PET radioactive drugs shall be:

1. An authorized nuclear pharmacist who meets the requirements in 39.4(29)*"j"*(2)"2," or

2. An individual under the supervision of an authorized nuclear pharmacist as specified in 641—subrule 41.2(11).

(4) A pharmacy authorized under 39.4(29)*"j"* to produce PET radioactive drugs for noncommercial transfer to medical use licensees in the pharmacy's consortium that allows an individual to work as an authorized nuclear pharmacist shall meet the requirements in 39.4(29)*"j"*(2)"5."

39.4(33) *Expiration and termination of licenses and decommissioning of sites and separate buildings or outdoor areas.*

a. Each specific license expires at the end of the day on the expiration date stated in the license unless the licensee has filed an application for renewal under 39.4(33) not less than 30 days before the expiration date stated in the existing license. If an application for renewal has been filed at least 30 days before the expiration date stated in the existing license, the existing license expires at the end of the day on which the agency makes a final determination to deny the renewal application or, if the determination states an expiration date, the expiration date stated in the determination.

b. Each specific license revoked by the agency expires at the end of the day on the date of the agency's final determination to revoke the license, or on the expiration date stated in the determination, or as otherwise provided by agency order.

c. Each specific license continues in effect, beyond the expiration date if necessary, with respect to possession of by-product material until the agency notifies the licensee in writing that the license is terminated. During this time, the licensee shall:

(1) Limit actions involving by-product material to those related to decommissioning; and

(2) Continue to control entry to restricted areas until they are suitable for release in accordance with state of Iowa requirements.

d. Within 60 days of the occurrence of any of the following, each licensee shall provide notification to the agency in writing of such occurrence, and either begin decommissioning its site, or any separate building or outdoor area that contains residual radioactivity so that the building or outdoor area is suitable for release in accordance with the state of Iowa requirements, or submit within 12 months of notification a decommissioning plan, if required by 39.4(33)*"j"* and begin decommissioning upon approval of that plan if:

(1) The license has expired pursuant to 39.4(33)*"a"* or *"b"*;

(2) The licensee has decided to permanently cease principal activities, as defined in 641—38.2(136C) at the entire site or in any separate building or outdoor area that contains residual radioactivity such that the building or outdoor area is unsuitable for release in accordance with state of Iowa requirements;

(3) No principal activities under the license have been conducted for a period of 24 months; or

(4) No principal activities have been conducted for a period of 24 months in any separate building or outdoor area suitable for release in accordance with State of Iowa requirements.

e. Coincident with the notification required by 39.4(33)*"d,"* the licensee shall maintain in effect all decommissioning financial assurances established by the licensee pursuant to subrule 39.4(26) in conjunction with a license issuance or renewal or as required by this subrule. The amount of the financial assurance must be increased, or may be decreased, as appropriate, to cover the detailed cost estimate for decommissioning established pursuant to paragraph 39.4(33)*"g."*

(1) Any licensee who has not provided financial assurance to cover the detailed cost estimate submitted with the decommissioning plan shall do so when this rule becomes effective on July 9, 1997.

(2) Following approval of the decommissioning plan, a licensee may reduce the amount of the financial assurance as decommissioning proceeds and radiological contamination is reduced at the site with the approval of the agency.

f. The agency may grant a request to extend the time periods established in 39.4(33)*"d"* if the agency determines that this request is not detrimental to the public health and safety and is otherwise in the public interest. The request must be submitted no later than 30 days before notification pursuant to 39.4(33)*"d."* The schedule for decommissioning set forth in 39.4(33)*"d"* of this subrule may not commence until the agency has made a determination on the request.

g. A decommissioning plan must be submitted if required by license conditions or if the procedures and activities necessary to carry out decommissioning of the site or separate building or outdoor area have not been previously approved by the agency and these procedures could increase the potential health and safety impacts to workers or to the public.

(1) Procedures having potential health and safety impacts include, but are not limited to:

1. Procedures that would involve techniques not applied routinely during cleanup or maintenance operations;

2. Workers that would be entering areas not normally occupied where surface contamination and radiation levels are significantly higher than routinely encountered during operation;

3. Procedures that could result in significantly greater airborne concentrations of radioactive material than are present during operation;

4. Procedures could result in significantly greater releases of radioactive material to the environment than those associated with operation.

(2) The agency may approve an alternate schedule for submittal of a decommissioning plan required pursuant to 39.4(33)*"d"* of this subrule if the agency determines that the alternate schedule is necessary to the effective conduct of decommissioning operations and presents no undue risk from radiation to the public health and safety and is otherwise in the public interest.

(3) Procedures such as those listed in 39.4(33)*"g"* with potential health and safety impacts may not be carried out prior to approval of the decommissioning plan.

(4) The proposed decommissioning plan for the site or separate building or outdoor area must include:

1. A description of the conditions of the site or separate building or outdoor area sufficient to evaluate the acceptability of the plan;

2. A description of planned decommissioning activities;

3. A description of the methods used to ensure protection of workers and the environment against radiation hazards during decommissioning;

4. A description of the planned final radiation survey; and

5. An updated detailed cost estimate for decommissioning, and a plan for ensuring the availability of adequate funds for completion of decommissioning.

6. A description of the physical security plan and material control and accounting plan provisions in place during decommissioning.

7. For decommissioning plans calling for completion of decommissioning later than 24 months after plan approval, the plan shall include justification for the delay based on the criteria in paragraph *"i"* of this subrule.

(5) The proposed decommissioning plan will be approved by the agency if the information therein demonstrates that the decommissioning will be completed as soon as practicable and that the health and safety of workers and the public will be adequately protected.

h. Except as provided in 39.4(33)*"i,"* licensees shall complete decommissioning of the site or separate building or outdoor area as soon as practicable but no later than 24 months following the initiation of decommissioning. When the decommissioning involves the entire site, the licensee shall request license termination as soon as practicable but no later than 24 months following the initiation of decommissioning.

i. The agency may approve a request for an alternative schedule for completion of decommissioning of the site or separate building or outdoor area, and license termination if appropriate, if the agency determines that the alternative is warranted by consideration of the following:

(1) It is technically feasible to complete decommissioning within the allotted 24-month period;

(2) Sufficient waste disposal capacity is available to allow completion of decommissioning within the allotted 24-month period;

(3) A significant volume reduction exposure to workers can be achieved by allowing short-lived radionuclides to decay;

(4) A significant reduction in radiation exposure to workers can be achieved by allowing short-lived radionuclides to decay; and

(5) Other site-specific factors which the agency may consider appropriate on a case-by-case basis, such as the regulatory requirements of other government agencies, lawsuits, groundwater treatment activities, monitored natural groundwater restoration, actions that could result in more environmental harm than a deferred cleanup, and other factors beyond the controls of the licensee.

j. As the final step in decommissioning, the licensee shall:

(1) Certify the disposition of all licensed material, including accumulated wastes, by submitting a completed IDPH Form 588-2793 or equivalent information; and

(2) Conduct a radiation survey of the premises where the licensed activities were carried out and submit a report of the results of this survey unless the licensee demonstrates in some other manner that the premises are suitable for release in accordance with the criteria for decommissioning in 641—40.28(136C) through 641—40.31(136C). The licensee shall, as appropriate:

1. Report levels of gamma radiation in units of millisieverts (microroentgen) per hour at one meter from surfaces, and report the level of radioactivity, including alpha and beta, in units of disintegrations per minute or microcuries (megabecquerels) per 100 square centimeters (removable and fixed) for surfaces, microcuries (megabecquerels) per liter for water, and becquerels (picocuries) per gram for solids such as soils or concrete; and

2. Specify the survey instrument(s) used and certify that each instrument is properly calibrated and tested.

k. Specific licenses, including expired licenses, will be terminated by written notice to the licensee when the agency determines that:

(1) By-product material has been properly disposed;

(2) Reasonable effort has been made to eliminate residual radioactive contamination, if present; and

(3) A radiation survey has been performed which demonstrates that the premises are suitable for release or other information submitted by the licensee is sufficient to demonstrate that the premises are suitable for release in accordance with the criteria for decommissioning in 641—40.28(136C) through 641—40.31(136C).

(4) Records required by 39.4(52)*"e"* and 39.4(52)*"g"* have been received.

l. Prior to license termination, each licensee authorized to possess radioactive material with a half-life greater than 120 days, in an unsealed form, shall forward the following records to the agency:

(1) Disposal of licensed material (including burials authorized before January 28, 1981), made under 641—40.71(136C) through 40.74(136C); and

(2) Records required by 641—paragraph 40.82(2)*"d."*

m. If licensed activities are transferred or assigned in accordance with 39.4(32)*"b,"* each licensee authorized to possess radioactive material with a half-life greater than 120 days, in an unsealed form, shall transfer the following records to the new licensee and the new licensee will be responsible for maintaining these records until the license is terminated:

(1) Records of disposal of licensed material (including burials authorized before January 28, 1981), made under 641—40.71(136C) through 40.74(136C); and

(2) Records required by 641—paragraph 40.82(2)*"d."*

n. Prior to license termination, each licensee shall forward the records required by 39.4(26)*"g"* to the agency.

39.4(34) *Renewal of licenses.*

a. Applications for renewal of specific licenses shall be filed in accordance with 39.4(24) and include the fees required in 641—subrule 38.8(2).

b. In any case in which a licensee, not less than 30 days prior to expiration of an existing license, has filed an application in proper form for renewal or for a new license authorizing the same activities, such existing license shall not expire until final action by the agency.

39.4(35) *Amendment of licenses at request of licensee.* Applications for amendment of a license shall be filed in accordance with 39.4(24), include the fees required in 641—subrule 38.8(2), and shall specify the respects in which the licensee desires the license to be amended and the grounds for such amendment.

39.4(36) *Agency action on applications to renew or amend.* In considering an application by a licensee to renew or amend the license, the agency will apply the criteria set forth in 39.4(25), 39.4(27), 39.4(28), and 39.4(29) and in 641—Chapters 38, 40, 41, 42, 43, 44 and 45, as applicable.

39.4(37) *Persons possessing a license for source, by-product, or special nuclear material in quantities not sufficient to form a critical mass on effective date of these rules.* Any person who, on the effective date of these rules, possesses a general or specific license issued by the U.S. Nuclear Regulatory Commission for source, by-product, or special nuclear material in quantities not sufficient to form a critical mass, shall be deemed to possess a like license issued under this chapter and the Iowa Code, such license to expire either 90 days after receipt from the agency of a notice of expiration of such license, or on the date or expiration specified in the U.S. Nuclear Regulatory Commission license, whichever is earlier.

39.4(38) *Persons possessing naturally occurring and accelerator-produced radioactive material on effective date of these rules.* Any person who, on the effective date of these rules, possesses NARM for which a specific license is required by the Iowa Code or this chapter shall be deemed to possess such a license issued under the Iowa Code and this chapter. Such license shall expire 90 days after the effective date of these rules; provided, however, that if within the 90 days the person possessing such material files an application in proper form for a license, such existing license shall not expire until the application has been finally determined by the agency.

39.4(39) *Requirements for license to initially transfer source material for use under a general license.* An application for a specific license to initially transfer source material for use under 39.4(21), or equivalent regulations of an agreement state or the Nuclear Regulatory Commission, will be approved if:

a. The applicant satisfies the general requirements specified in 39.4(25); and

b. The applicant submits adequate information on, and the agency approves the methods to be used for, quality control, labeling, and providing safety instructions to recipients.

39.4(40) *Conditions of licenses to initially transfer source material for use under general license: quality control, labeling, safety instructions, and records and reports.*

a. Each person licensed under 39.4(39) shall label the immediate container of each quantity of source material with the type of source material and quantity of material and the words "radioactive material."

b. Each person licensed under 39.4(39) shall ensure that the quantities and concentrations of source material are as labeled and indicated in any transfer records.

c. Each person licensed under 39.4(39) shall provide the information specified in this paragraph to each person to whom source material is transferred for use under 39.4(21) or equivalent provisions in agreement state or Nuclear Regulatory Commission regulations. This information must be transferred before the source material is transferred for the first time in each calendar year to the particular recipient. The required information includes:

(1) A copy of 39.4(21) and 39.4(41) or relevant equivalent regulations of the agreement state or Nuclear Regulatory Commission.

(2) Appropriate radiation safety precautions and instructions relating to handling, use, storage, and disposal of the material.

d. Each person licensed under 39.4(39) shall report transfers as follows:

(1) File a report with the Iowa Department of Public Health, 321 East 12th Street, Des Moines, Iowa 50319. The report shall include the following information:

1. The name, address, and license number of the person who transferred the source material;

2. For each general licensee under 39.4(21) or equivalent agreement state or Nuclear Regulatory Commission provisions to whom greater than 50 grams (0.11 lb) of source material has been transferred in a single calendar quarter, the name and address of the general licensee to whom source material is distributed; a responsible agent, by name or position, or both, and telephone number, of the general licensee to whom the material was sent; and the type, physical form, and quantity of source material transferred; and

3. The total quantity of each type and physical form of source material transferred in the reporting period to all such generally licensed recipients.

(2) File a report with each responsible agreement state agency or the Nuclear Regulatory Commission that identifies all persons, operating under provisions equivalent to 39.4(21), to whom greater than 50 grams (0.11 lb) of source material has been transferred within a single calendar quarter. The report shall include the following information specific to those transfers made to the agreement state or Nuclear Regulatory Commission jurisdiction:

1. The name, address, and license number of the person who transferred the source material; and

2. The name and address of the general licensee to whom source material was distributed; a responsible agent, by name or position, or both, and telephone number, of the general licensee to whom the material was sent; and the type, physical form, and quantity of source material transferred; and

3. The total quantity of each type and physical form of source material transferred in the reporting period to all such generally licensed recipients within the agreement state or Nuclear Regulatory Commission jurisdiction.

(3) Submit each report by January 31 of each year covering all transfers for the previous calendar year. If no transfers were made to persons generally licensed under 39.4(21) or equivalent agreement state or Nuclear Regulatory Commission provisions during the current period, a report shall be submitted to the agency indicating so. If no transfers have been made to general licensees in a particular agreement state or Nuclear Regulatory Commission jurisdiction during the reporting period, this information shall be reported to the responsible agreement state agency or Nuclear Regulatory Commission upon request.

e. Each person licensed under 39.4(39) shall maintain all information that supports the reports required by these rules concerning each transfer to a general licensee for a period of one year after the

event is included in a report to the agency, the Nuclear Regulatory Commission or to an agreement state agency.

39.4(41) *Transfer of material.*

a. No licensee shall transfer radioactive material except as authorized pursuant to 39.4(41).

b. Except as otherwise provided in the license and subject to the provisions of 39.4(41)*"c"* and *"d,"* any licensee may transfer radioactive material:

(1) To the agency (a licensee may transfer material to the agency only after receiving prior approval from the agency);

(2) To the U.S. Department of Energy;

(3) To any person exempt from these rules to the extent permitted under such exemption;

(4) To any person authorized to receive such material under terms of a general license or its equivalent, or a specific license or equivalent licensing document, issued by the agency, the U.S. Nuclear Regulatory Commission, any agreement state or any licensing state, or to any person otherwise authorized to receive such material by the federal government or any agency thereof, the agency, an agreement state, or a licensing state; or

(5) As otherwise authorized by the agency in writing.

c. Before transferring radioactive material to a specific licensee of the agency, the U.S. Nuclear Regulatory Commission, an agreement state or a licensing state, or to a general licensee who is required to register with the agency, the U.S. Nuclear Regulatory Commission, an agreement state or a licensing state prior to receipt of the radioactive material, the licensee transferring the material shall verify that the transferee's license authorizes the receipt of the type, form, and quantity of radioactive material to be transferred.

d. Any of the following methods for the verification required by 39.4(41)*"c"* is acceptable:

(1) The transferor may possess and read a current copy of the transferee's specific license or registration certificate.

(2) The transferor may possess a written certification by the transferee that the transferee is authorized by license or registration certificate to receive the type, form, and quantity of radioactive material to be transferred, specifying the license or registration certificate number, issuing agency, and expiration date.

(3) For emergency shipments, the transferor may accept oral certification by the transferee that the transferee is authorized by license or registration certificate to receive the type, form, and quantity of radioactive material to be transferred, specifying the license or registration certificate number, issuing agency, and expiration date, provided that the oral certification is confirmed in writing within ten days.

(4) The transferor may obtain other information compiled by a reporting service from official records of the agency, the U.S. Nuclear Regulatory Commission, an agreement state, or a licensing state regarding the identity of licensees and the scope and expiration dates of licenses and registration.

(5) When none of the methods of verification described in 39.4(41)*"d"*(1) through (4) are readily available or when a transferor desires to verify that information received by one of such methods is correct or up to date, the transferor may obtain and record confirmation from the agency, the U.S. Nuclear Regulatory Commission, an agreement state, or a licensing state that the transferee is licensed to receive the radioactive material.

e. Shipment and transport of radioactive material shall be in accordance with the provisions of 641—39.5(136C).

39.4(42) to **39.4(50)** Reserved.

39.4(51) *Modification and revocation of licenses.*

a. The terms and conditions of all licenses shall be subject to amendment, revision, or modification or the license may be suspended or revoked by reason of amendments to the Iowa Code, or by reason of rules, regulations, and orders issued by the agency.

b. Any license may be revoked, suspended, or modified, in whole or in part, for any material false statement in the application or any statement of fact required under provisions of the Iowa Code, or because of conditions revealed by such application or statement of fact or any report, record, or inspection or other means which would warrant the agency to refuse to grant a license on an original application, or

for violation of, or failure to observe any of the terms and conditions of the Iowa Code, or of the license, or of any rule, regulation, or order of the agency.

c. Except in cases of willfulness or those in which the public health, interest or safety requires otherwise, no license shall be modified, suspended, or revoked unless, prior to the institution of proceedings therefor, facts or conduct which may warrant such action shall have been called to the attention of the licensee in writing and the licensee shall have been accorded an opportunity to demonstrate or achieve compliance with all lawful requirements.

39.4(52) *Records.*

a. Each person who receives by-product material pursuant to a license shall keep records showing the receipt, transfer, and disposal of the by-product material as follows:

(1) The licensee shall retain each record of receipt of by-product material as long as the material is possessed and for three years following transfer or disposal of material.

(2) The licensee who transferred the material shall retain each record of transfer for three years after each transfer unless a specific requirement in another part of these rules dictates otherwise.

(3) The licensee who disposed of the material shall retain each record of disposal of by-product material until the agency terminates each license that authorizes disposal of the material.

b. The licensee shall retain each record that is required by these rules or by license condition for the period specified by the appropriate rule or license condition; the record must be retained until the agency terminates each license that authorizes the activity that is subject to the record-keeping requirements.

c. Records which must be maintained may be the original or a reproduced copy or microfilm if such reproduced copy or microfilm is duly authenticated by authorized personnel and the microfilm is capable of producing a clear and legible copy after storage for the period specified by agency regulations. The record may also be stored in electronic media with the capability for producing legible, accurate, and complete records during the required retention period. Records such as letters, drawings and specifications must include all pertinent information such as stamps, initials, and signatures. The licensee shall maintain adequate safeguards against tampering with and loss of records.

d. If there is a conflict between the agency's rules or other written agency approval or authorization pertaining to the retention period for the same type of record, the retention period specified in these rules for such records shall apply unless the agency has granted a specific exemption from the record retention requirements specified in agency rules.

e. Prior to license termination, each licensee authorized to possess radioactive material with a half-life greater than 120 days, in an unsealed form, shall forward the following records to the agency:

(1) Records of disposal of licensed material made under 641—40.71(136C) (including burials authorized before January 28, 1981) to 641—40.74(136C); and

(2) Records required by 641—paragraph 40.82(2)*"d."*

f. If licensed activities are transferred or assigned, each licensee authorized to possess radioactive material, with a half-life greater than 120 days, in an unsealed form, shall transfer the following records to the new licensee and the new licensee will be responsible for maintaining these records until the license is terminated:

(1) Records of disposal of licensed material made under 40.71(136C) (including burials authorized before January 28, 1981) to 641—40.74(136C); and

(2) Records required by 641—paragraph 40.82(2)*"d."*

g. Prior to license termination, each licensee shall forward the records required by subrule 39.4(26) to the agency.

39.4(53) to **39.4(89)** Reserved.

39.4(90) *Reciprocal recognition of licenses.*

a. Licenses of by-product, source, and special nuclear material in quantities not sufficient to form a critical mass.

(1) Subject to 641—Chapter 39, any person who holds a specific license from the U.S. Nuclear Regulatory Commission or an agreement state, and issued by the agency having jurisdiction where the licensee maintains an office for directing the licensed activity and at which radiation safety records are normally maintained, is hereby granted a general license to conduct the activities authorized in such

licensing document within this state for a period not in excess of 180 days in a one-year period. The one-year period starts on the day the licensee's reciprocity fee, as specified in 641—subrule 38.8(8), is received by the agency and ends exactly 365 days later. Licensees are responsible for ensuring they do not exceed the 180-day limit within the one-year period and must apply for renewal 30 days prior to the expiration date of the one-year reciprocal recognition period. Out-of-state persons wishing to operate in the state in excess of 180 calendar days must obtain an Iowa radioactive materials license.

(2) The licensing document referenced in 39.4(90)*"a"*(1) shall not limit the activity authorized by such document to specified installations or locations.

(3) The out-of-state licensee shall notify the agency in writing at least three working days prior to engaging in activities in the state. Such notification shall indicate the location, period, and type of proposed possession and use within the state, and shall be accompanied by a copy of the pertinent licensing document initially. If, for a specific case, the three-day period would impose an undue hardship on the out-of-state licensee, the licensee may, upon application to the agency, obtain permission to proceed sooner. The agency may waive the requirement for filing additional written notifications during the remainder of the one-year reciprocity period following the receipt of the initial notification from a person engaging in activities under the general license provided by 39.4(90)*"a."*

(4) The out-of-state licensee shall comply with all applicable rules of the agency and with all the terms and conditions of the licensing document, except any such terms and conditions which may be inconsistent with applicable rules of the agency.

(5) The out-of-state licensee shall supply other information as the agency may request.

(6) The out-of-state licensee shall not transfer or dispose of radioactive material possessed or used under the general license provided by 39.4(90)*"a"* except by transfer to a person specifically licensed by the agency, another agreement state or the U.S. Nuclear Regulatory Commission to receive such material.

(7) Notwithstanding the provisions of 39.4(90)*"a"*(1), any person who holds a specific license issued by the U.S. Nuclear Regulatory Commission or an agreement state authorizing the holder to manufacture, transfer, install, or service a device described in 39.4(22)*"d"*(1) within areas subject to the jurisdiction of the licensing body is hereby granted a general license to install, transfer, demonstrate, or service such a device in this state provided that:

1. Such person shall file a report with the agency within 30 days after the end of each calendar quarter in which any device is transferred to or installed in this state. Each such report shall identify each general licensee to whom such device is transferred by name and address, the type of device transferred, and the quantity and type of radioactive material contained in the device;

2. The device has been manufactured, labeled, installed, and serviced in accordance with applicable provisions of the specific license issued to such person by the U.S. Nuclear Regulatory Commission or an agreement state;

3. Such person shall ensure that any labels required to be affixed to the device under regulations of the authority which licensed manufacture of the device bear a statement that "Removal of this label is prohibited"; and

4. The holder of the specific license shall furnish to each general licensee to whom the holder transfers such device or on whose premises the holder installs such device a copy of the general license contained in 39.4(22)*"d"* or in equivalent regulations of the agency having jurisdiction over the manufacture and distribution of the device.

(8) The agency may withdraw, limit, or qualify its acceptance of any specific license or equivalent licensing document issued by the U.S. Nuclear Regulatory Commission or an agreement state, or any product distributed pursuant to such licensing document, upon determining that such action is necessary in order to prevent undue hazard to public health and safety or property.

(9) The agency may revoke or suspend an out-of-state radiographer's ID card issued by the U.S. Nuclear Regulatory Commission, a licensing state, or another agreement state in accordance with the provisions of 641—45.1(10)*"h."*

b. Licenses of naturally occurring or accelerator-produced radioactive material.

(1) Subject to 641—Chapter 39, any person who holds a specific license from the U.S. Nuclear Regulatory Commission or an agreement state, and issued by the agency having jurisdiction where the

licensee maintains an office for directing the licensed activity and at which radiation safety records are normally maintained, is hereby granted a general license to conduct the activities authorized in such licensing document within this state for a period not in excess of 180 days in a one-year period. The one-year period starts on the day the licensee's reciprocity fee, as specified in 641—subrule 38.8(8), is received by the agency and ends exactly 365 days later. Licensees are responsible for ensuring they do not exceed the 180-day limit within the one-year period and must apply for renewal 30 days prior to the expiration date of the one-year reciprocal recognition period. Out-of-state persons wishing to operate in the state in excess of 180 calendar days must obtain an Iowa radioactive materials license, which requires that the person have a permanent office in Iowa where records are maintained pertaining to licensed activities and where material can be stored, and must have at least one full-time employee and a telephone.

(2) The licensing document referenced in 39.4(90)*"a"*(1) shall not limit the activity authorized by such document to specified installations or locations.

(3) The out-of-state licensee shall notify the agency in writing at least three days prior to engaging in activities in the state. Such notification shall indicate the location, period, and type of proposed possession and use within the state, and shall be accompanied by a copy of the pertinent licensing document initially. If, for a specific case, the three-day period would impose an undue hardship on the out-of-state licensee, the licensee may, upon application to the agency, obtain permission to proceed sooner. The agency may waive the requirement for filing additional written notifications during the remainder of the one-year reciprocity period following the receipt of the initial notification from a person engaging in activities under the general license provided by 39.4(90)*"b."*

(4) The out-of-state licensee shall comply with all applicable rules of the agency and with all the terms and conditions of the licensing document, except any such terms and conditions which may be inconsistent with applicable rules of the agency.

(5) The out-of-state licensee shall supply other information as the agency may request.

(6) The out-of-state licensee shall not transfer or dispose of radioactive material possessed or used under the general license provided by 39.4(90)*"b"* except by transfer to a person:

1. Specifically licensed by the agency, another agreement state or the U.S. Nuclear Regulatory Commission to receive such material, or

2. Exempt from the requirements for a license for such material under 39.4(3)*"a."*

(7) Notwithstanding the provisions of 39.4(90)*"b"*(1), any person who holds a specific license issued by the U.S. Nuclear Regulatory Commission or an agreement state authorizing the holder to manufacture, transfer, install, or service a device described in 39.4(22)*"d"*(1) within areas subject to the jurisdiction of the licensing body is hereby granted a general license to install, transfer, demonstrate, or service such a device in this state provided that:

1. Such person shall file a report with the agency within 30 days after the end of each calendar quarter in which any device is transferred to or installed in this state. Each such report shall identify each general licensee to whom such device is transferred by name and address, the type of device transferred, and the quantity and type of radioactive material contained in the device;

2. The device has been manufactured, labeled, installed, and serviced in accordance with applicable provisions of the specific license issued to such person by the U.S. Nuclear Regulatory Commission or an agreement state;

3. Such person shall ensure that any labels required to be affixed to the device under regulations of the authority which licensed manufacture of the device bear a statement that "Removal of this label is prohibited"; and

4. The holder of the specific license shall furnish to each general licensee to whom the holder transfers such device or on whose premises the holder installs such device a copy of the general license contained in 39.4(22)*"d"* or in equivalent regulations of the agency having jurisdiction over the manufacture and distribution of the device.

(8) The agency may withdraw, limit, or qualify its acceptance of any specific license or equivalent licensing document issued by the U.S. Nuclear Regulatory Commission or an agreement state, or any

product distributed pursuant to such licensing document, upon determining that such action is necessary in order to prevent undue hazard to public health and safety or property.

(9) The agency may revoke or suspend an out-of-state radiographer's ID card issued by the U.S. Nuclear Regulatory Commission, a licensing state, or another agreement state in accordance with the provisions of 641—45.1(10)*"h."*

39.4(91) to **39.4(104)** Reserved.

[**ARC 7983B**, IAB 7/29/09, effective 9/2/09; **ARC 8982B**, IAB 8/11/10, effective 9/15/10; **ARC 1639C**, IAB 10/1/14, effective 11/5/14]

641—39.5(136C) Transportation of radioactive material. All persons who transport radioactive material or deliver radioactive material to a carrier for transport must comply with the applicable provisions contained in 10 CFR Part 71 and 49 CFR Parts 170 through 189. The regulations in 10 CFR Part 71 apply to any licensee authorized by specific or general license to receive, possess, use, or transfer licensed material, if the licensee delivers that material to a carrier for transport, transports the material outside the site of usage, or transports that material on public highways. No provision of 10 CFR Part 71 authorizes possession of licensed material.

CHAPTER 39—APPENDIX A
EXEMPT CONCENTRATIONS

Element (atomic number)	Radionuclide	Column I Gas concentration μCi/ml 1/	Column II Liquid and solid concentration μCi/ml 2/
Antimony (51)	Sb-122		3×10^{-4}
	Sb-124		2×10^{-4}
	Sb-125		1×10^{-3}
Argon (18)	Ar-37	1×10^{-3}	
	Ar-41	4×10^{-7}	
Arsenic (33)	As-73		5×10^{-3}
	As-74		5×10^{-4}
	As-76		2×10^{-4}
	As-77		8×10^{-4}
Barium (56)	Ba-131		2×10^{-3}
	Ba-140		3×10^{-4}
Beryllium (4)	Be-7		2×10^{-2}
Bismuth (83)	Bi-206		4×10^{-4}
Bromine (35)	Br-82	4×10^{-7}	3×10^{-3}
Cadmium (48)	Cd-109		2×10^{-3}
	Cd-115m		3×10^{-4}
	Cd-115		3×10^{-4}
Calcium (20)	Ca-45		9×10^{-5}
	Ca-47		5×10^{-4}
Carbon (6)	C-14	1×10^{-6}	8×10^{-3}
Cerium (58)	Ce-141		9×10^{-4}
	Ce-143		4×10^{-4}
	Ce-144		1×10^{-4}
Cesium (55)	Cs-131		2×10^{-2}
	Cs-134m		6×10^{-2}
	Cs-134		9×10^{-5}
Chlorine (17)	Cl-38	9×10^{-7}	4×10^{-3}
Chromium (24)	Cr-51		2×10^{-2}
Cobalt (27)	Co-57		5×10^{-3}
	Co-58		1×10^{-3}
	Co-60		5×10^{-4}
Copper (29)	Cu-64		3×10^{-3}
Dysprosium (66)	Dy-165		4×10^{-3}
	Dy-166		4×10^{-4}
Erbium (68)	Er-169		9×10^{-4}
	Er-171		1×10^{-3}
Europium (63)	Eu-152(9.2 h)		6×10^{-4}
	Eu-155		2×10^{-3}
Fluorine (9)	F-18	2×10^{-6}	8×10^{-3}

Element (atomic number)	Radionuclide	Column I Gas concentration μCi/ml 1/	Column II Liquid and solid concentration μCi/ml 2/
Gadolinium (64)	Gd-153		2×10^{-3}
	Gd-159		8×10^{-4}
Gallium (31)	Ga-72		4×10^{-4}
Germanium (32)	Ge-71		2×10^{-2}
Gold (79)	Au-196		2×10^{-3}
	Au-198		5×10^{-4}
	Au-199		2×10^{-3}
Hafnium (72)	Hf-181		7×10^{-4}
Hydrogen (1)	H-3	5×10^{-6}	3×10^{-2}
Indium (49)	In-113m		1×10^{-2}
	In-114m		2×10^{-4}
Iodine (53)	I-126	3×10^{-9}	2×10^{-5}
	I-131	3×10^{-9}	2×10^{-5}
	I-132	8×10^{-8}	6×10^{-4}
	I-133	1×10^{-8}	7×10^{-5}
	I-134	2×10^{-7}	1×10^{-3}
Iridium (77)	Ir-190		2×10^{-3}
	Ir-192		4×10^{-4}
	Ir-194		3×10^{-4}
Iron (26)	Fe-55		8×10^{-3}
	Fe-59		6×10^{-4}
Krypton (36)	Kr-85m	1×10^{-6}	
	Kr-85	3×10^{-6}	
Lanthanum (57)	La-140		2×10^{-4}
Lead (82)	Pb-203		4×10^{-3}
Lutetium (71)	Lu-177		1×10^{-3}
Manganese (25)	Mn-52		3×10^{-4}
	Mn-54		1×10^{-3}
	Mn-56		1×10^{-3}
Mercury (80)	Hg-197m		2×10^{-3}
	Hg-197		3×10^{-3}
	Hg-203		2×10^{-4}
Molybdenum (42)	Mo-99		2×10^{-3}
Neodymium (60)	Nd-147		6×10^{-4}
	Nd-149		3×10^{-3}
Nickel (28)	Ni-65		1×10^{-3}
Niobium (Columbium) (41)	Nb-95		1×10^{-3}
	Nb-97		9×10^{-3}
Osmium (76)	Os-185		7×10^{-4}
	Os-191m		3×10^{-2}
	Os-191		2×10^{-3}
	Os-193		6×10^{-4}

Element (atomic number)	Radionuclide	Column I Gas concentration μCi/ml 1/	Column II Liquid and solid concentration μCi/ml 2/
Palladium (46)	Pd-103		3×10^{-3}
	Pd-109		9×10^{-4}
Phosphorus (15)	P-32		2×10^{-4}
Platinum (78)	Pt-191		1×10^{-3}
	Pt-193m		1×10^{-2}
	Pt-197m		1×10^{-2}
	Pt-197		1×10^{-3}
Potassium (19)	K-42		3×10^{-3}
Praseodymium (59)	Pr-142		3×10^{-4}
	Pr-143		5×10^{-4}
Promethium (61)	Pm-147		2×10^{-3}
	Pm-149		4×10^{-4}
Rhenium (75)	Re-183		6×10^{-3}
	Re-186		9×10^{-4}
	Re-188		6×10^{-4}
Rhodium (45)	Rh-103m		1×10^{-1}
	Rh-105		1×10^{-3}
Rubidium (37)	Rb-86		7×10^{-4}
Ruthenium (44)	Ru-97		4×10^{-3}
	Ru-103		8×10^{-4}
	Ru-105		1×10^{-3}
	Ru-106		1×10^{-4}
Samarium (62)	Sm-153		8×10^{-4}
Scandium (21)	Sc-46		4×10^{-4}
	Sc-47		9×10^{-4}
	Sc-48		3×10^{-4}
Selenium (34)	Se-75		3×10^{-3}
Silicon (14)	Si-31		9×10^{-3}
Silver (47)	Ag-105		1×10^{-3}
	Ag-110m		3×10^{-4}
	Ag-111		4×10^{-4}
Sodium (11)	Na-24		2×10^{-3}
Strontium (38)	Sr-85		1×10^{-3}
	Sr-89		1×10^{-4}
	Sr-91		7×10^{-4}
	Sr-92		7×10^{-4}
Sulfur (16)	S-35	9×10^{-8}	6×10^{-4}
Tantalum (73)	Ta-182		4×10^{-4}
Technetium (43)	Tc-96m		1×10^{-1}
	Tc-96		1×10^{-3}
Tellurium (52)	Te-125m		2×10^{-3}
	Te-127m		6×10^{-4}

Element (atomic number)	Radionuclide	Column I Gas concentration μCi/ml 1/	Column II Liquid and solid concentration μCi/ml 2/
	Te-127		3×10^{-3}
	Te-129m		3×10^{-4}
	Te-131m		6×10^{-4}
	Te-132		3×10^{-4}
Terbium (65)	Tb-160		4×10^{-4}
Thallium (81)	Tl-200		4×10^{-3}
	Tl-201		3×10^{-3}
	Tl-202		1×10^{-3}
	Tl-204		1×10^{-3}
Thulium (69)	Tm-170		5×10^{-4}
	Tm-171		5×10^{-3}
Tin (50)	Sn-113		9×10^{-4}
	Sn-125		2×10^{-4}
Tungsten (Wolfram) (74)	W-181		4×10^{-3}
	W-187		7×10^{-4}
Vanadium (23)	V-48		3×10^{-4}
Xenon (54)	Xe-131m	4×10^{-6}	
	Xe-133	3×10^{-6}	
	Xe-135	1×10^{-6}	
Ytterbium (70)	Yb-175		1×10^{-3}
Yttrium (39)	Y-90		2×10^{-4}
	Y-91m		3×10^{-2}
	Y-91		3×10^{-4}
	Y-92		6×10^{-4}
	Y-93		3×10^{-4}
Zinc (30)	Zn-65		1×10^{-3}
	Zn-69m		7×10^{-4}
	Zn-69		2×10^{-2}
Zirconium (40)	Zr-95		6×10^{-4}
	Zr-97		2×10^{-4}
Beta- and/or gamma-emitting radioactive material not listed above with half-life of less than 3 years.		1×10^{-10}	1×10^{-6}

1/ Values are given in Column I only for those materials normally used as gases.

2/ μCi/g for solids.

NOTE 1: Many radionuclides transform into other radionuclides. In expressing the concentrations in Appendix A, the activity stated is that of the parent radionuclide and takes into account the radioactive decay products.

NOTE 2: For purposes of 39.4(3) where there is involved a combination of radionuclides, the limit for the combination should be derived as follows: Determine for each radionuclide in the product the ratio between the radioactivity concentration present in the product and the exempt radioactivity concentration established in Appendix A for the specific radionuclide when not in combination. The sum of such ratios may not exceed "1."

EXAMPLE: $\frac{\text{Concentration of Radionuclide A in Product}}{\text{Exempt concentration of Radionuclide A}} + \frac{\text{Concentration of Radionuclide B in Product}}{\text{Exempt concentration of Radionuclide B}} < 1$

NOTE 3: To convert μCi/ml to SI units of megabecquerels per liter multiply the above values by 37.

EXAMPLE: Zirconium (40) Zr-97 (2×10^{-4} μCi/ml multiplied by 37 is equivalent to 74×10^{-4} MBq/l)

CHAPTER 39—APPENDIX B
EXEMPT QUANTITIES

Radioactive Material	Microcuries
Antimony-122 (Sb 122)	100
Antimony-124 (Sb 124)	10
Antimony-125 (Sb 125)	10
Arsenic-73 (As 73)	100
Arsenic-74 (As 74)	10
Arsenic-76 (As 76)	10
Arsenic-77 (As 77)	100
Barium-131 (Ba 131)	10
Barium-133 (Ba 133)	10
Barium-140 (Ba 140)	10
Bismuth-210 (Bi 210)	1
Bromine-82 (Br 82)	10
Cadmium-109 (Cd 109)	10
Cadmium-115m (Cd 115m)	10
Cadmium-115 (Cd 115)	100
Calcium-45 (Ca 45)	10
Calcium-47 (Ca 47)	10
Carbon-14 (C 14)	100
Cerium-141 (Ce 141)	100
Cerium-143 (Ce 143)	100
Cerium-144 (Ce 144)	1
Cesium-129 (Cs 129)	100
Cesium-131 (Cs 131)	1,000
Cesium-134m (Cs 134m)	100
Cesium-134 (Cs 134)	1
Cesium-135 (Cs 135)	10
Cesium-136 (Cs 136)	10
Cesium-137 (Cs 137)	10
Chlorine-36 (Cl 36)	10
Chlorine-38 (Cl 38)	10
Chromium-51 (Cr 51)	1,000
Cobalt-57 (Co 57)	100
Cobalt-58m (Co 58m)	10
Cobalt-58 (Co 58)	10
Cobalt-60 (Co 60)	1
Copper-64 (Cu 64)	100
Dysprosium-165 (Dy 165)	10
Dysprosium-166 (Dy 166)	100
Erbium-169 (Er 169)	100
Erbium-171 (Er 171)	100
Europium-152 (Eu 152)9.2h	100
Europium-152 (Eu 152)13 yr	1

Radioactive Material	Microcuries
Europium-154 (Eu 154)	1
Europium-155 (Eu 155)	10
Fluorine-18 (F 18)	1,000
Gadolinium-153 (Gd 153)	10
Gadolinium-159 (Gd 159)	100
Gallium-67 (Ga 67)	100
Gallium-72 (Ga 72)	10
Germanium-68 (Ge 68)	10
Germanium-71 (Ge 71)	100
Gold-195 (Au 195)	10
Gold-198 (Au 198)	100
Gold-199 (Au 199)	100
Hafnium-181 (Hf 181)	10
Holmium-166 (Ho 166)	100
Hydrogen-3 (H 3)	1,000
Indium-111 (In 111)	100
Indium-113m (In 113m)	100
Indium-114m (In 114m)	10
Indium-115m (In 115m)	100
Indium-115 (In 115)	10
Iodine-123 (I 123)	100
Iodine-125 (I 125)	1
Iodine-126 (I 126)	1
Iodine-129 (I 129)	0.1
Iodine-131 (I 131)	1
Iodine-132 (I 132)	10
Iodine-133 (I 133)	1
Iodine-134 (I 134)	10
Iodine-135 (I 135)	10
Iridium-192 (Ir 192)	10
Iridium-194 (Ir 194)	100
Iron-52 (Fe 52)	10
Iron-55 (Fe 55)	100
Iron-59 (Fe 59)	10
Krypton-85 (Kr 85)	100
Krypton-87 (Kr 87)	10
Lanthanum-140 (La 140)	10
Lutetium-177 (Lu 177)	100
Manganese-52 (Mn 52)	10
Manganese-54 (Mn 54)	10
Manganese-56 (Mn 56)	10
Mercury-197m (Hg 197m)	100
Mercury-197 (Hg 197)	100
Mercury-203 (Hg 203)	10

Radioactive Material	Microcuries
Molybdenum-99 (Mo 99)	100
Neodymium-147 (Nd 147)	100
Neodymium-149 (Nd 149)	100
Nickel-59 (Ni 59)	100
Nickel-63 (Ni 63)	10
Nickel-65 (Ni 65)	100
Niobium-93m (Nb 93m)	10
Niobium-95 (Nb 95)	10
Niobium-97 (Nb 97)	10
Osmium-185 (Os 185)	10
Osmium-191m (Os 191m)	100
Osmium-191 (Os 191)	100
Osmium-193 (Os 193)	100
Palladium-103 (Pd 103)	100
Palladium-109 (Pd 109)	100
Phosphorus-32 (P 32)	10
Platinum-191 (Pt 191)	100
Platinum-193m (Pt 193m)	100
Platinum-193 (Pt 193)	100
Platinum-197m (Pt 197m)	100
Platinum-197 (Pt 197)	100
Polonium-210 (Po 210)	0.1
Potassium-42 (K 42)	10
Potassium-43 (K 43)	10
Praseodymium-142 (Pr 142)	100
Praseodymium-143 (Pr 143)	100
Promethium-147 (Pm 147)	10
Promethium-149 (Pm 149)	10
Rhenium-186 (Re 186)	100
Rhenium-188 (Re 188)	100
Rhodium-103m (Rh 103m)	100
Rhodium-105 (Rh 105)	100
Rubidium-81 (Rb 81)	10
Rubidium-86 (Rb 86)	10
Rubidium-87 (Rb 87)	10
Ruthenium-97 (Ru 97)	100
Ruthenium-103 (Ru 103)	10
Ruthenium-105 (Ru 105)	10
Ruthenium-106 (Ru 106)	1
Samarium-151 (Sm 151)	10
Samarium-153 (Sm 153)	100
Scandium-46 (Sc 46)	10
Scandium-47 (Sc 47)	100
Scandium-48 (Sc 48)	10

Radioactive Material	Microcuries
Selenium-75 (Se 75)	10
Silicon-31 (Si 31)	100
Silver-105 (Ag 105)	10
Silver-110m (Ag 110m)	1
Silver-111 (Ag 111)	100
Sodium-22 (Na 22)	10
Sodium-24 (Na 24)	10
Strontium-85 (Sr 85)	10
Strontium-89 (Sr 89)	1
Strontium-90 (Sr 90)	0.1
Strontium-91 (Sr 91)	10
Strontium-92 (Sr 92)	10
Sulphur-35 (S 35)	100
Tantalum-182 (Ta 182)	10
Technetium-96 (Tc 96)	10
Technetium-97m (Tc 97m)	100
Technetium-97 (Tc 97)	100
Technetium-99m (Tc 99m)	100
Technetium-99 (Tc 99)	10
Tellurium-125m (Te 125m)	10
Tellurium-127m (Te 127m)	10
Tellurium-127 (Te 127)	100
Tellurium-129m (Te 129m)	10
Tellurium-129 (Te 129)	100
Tellurium-131m (Te 131m)	10
Tellurium-132 (Te 132)	10
Terbium-160 (Tb 160)	10
Thallium-200 (Tl 200)	100
Thallium-201 (Tl 201)	100
Thallium-202 (Tl 202)	100
Thallium-204 (Tl 204)	10
Thulium-170 (Tm 170)	10
Thulium-171 (Tm 171)	10
Tin-113 (Sn 113)	10
Tin-125 (Sn 125)	10
Tungsten-181 (W 181)	10
Tungsten-185 (W 185)	10
Tungsten-187 (W 187)	100
Vanadium-48 (V 48)	10
Xenon-131m (Xe 131m)	1,000
Xenon-133 (Xe 133)	100
Xenon-135 (Xe 135)	100
Ytterbium-175 (Yb 175)	100
Yttrium-87 (Y 87)	10

Radioactive Material	Microcuries
Yttrium-88 (Y 88)	10
Yttrium-90 (Y 90)	10
Yttrium-91 (Y 91)	10
Yttrium-92 (Y 92)	100
Yttrium-93 (Y 93)	100
Zinc-65 (Zn 65)	10
Zinc-69m (Zn 69m)	100
Zinc-69 (Zn 69)	1,000
Zirconium-93 (Zr 93)	10
Zirconium-95 (Zr 95)	10
Zirconium-97 (Zr 97)	10
Any radioactive material not listed above other than alpha-emitting radioactive material	0.1

NOTE 1: For purposes of 39.4(25)*"f"*(5)"2" where there is involved a combination of radionuclides, the limit for the combination should be derived as follows:
Determine the amount of each radionuclide possessed and 1,000 times the amount in Appendix B for each of those radionuclides when not in combination. The sum of the ratios of those quantities may not exceed 1.

EXAMPLE:

$$\frac{\text{Amt. of Radionuclide A possessed}}{1000 \times \text{Appendix B quantity for Radionuclide A}} + \frac{\text{Amt. of Radionuclide B possessed}}{1000 \times \text{Appendix B quantity for Radionuclide B}} \mu\ 1$$

NOTE 2: To convert microcuries (μCi) to SI units of kilobecquerels (kBq), multiply the above values by 37.

EXAMPLE: Zirconium-97 (10 μCi multiplied by 37 is equivalent to 370 kBq).

CHAPTER 39—APPENDIX C
Reserved

CHAPTER 39—APPENDIX D

LIMITS FOR BROAD LICENSES (39.4(28))

Radioactive Material	Column I curies	Column II curies
Antimony-122	1	0.01
Antimony-124	1	0.01
Antimony-125	1	0.01
Arsenic-73	10	0.1
Arsenic-74	1	0.01
Arsenic-76	1	0.01
Arsenic-77	10	0.1
Barium-131	10	0.1
Barium-140	1	0.01
Beryllium-7	10	0.1
Bismuth-210	0.1	0.001
Bromine-82	10	0.1
Cadmium-109	1	0.01
Cadmium-115m	1	0.01
Cadmium-115	10	0.1
Calcium-45	1	0.01
Calcium-47	10	0.1
Carbon-14	100	1.
Cerium-141	10	0.1
Cerium-143	10	0.1
Cerium-144	0.1	0.001
Cesium-131	100	1.
Cesium-134m	100	1.
Cesium-134	0.1	0.001
Cesium-135	1	0.01
Cesium-136	10	0.1
Cesium-137	0.1	0.001
Chlorine-36	1	0.01
Chlorine-38	100	1.
Chromium-51	100	1.
Cobalt-57	10	0.1
Cobalt-58m	100	1.
Cobalt-58	1	0.01
Cobalt-60	0.1	0.001
Copper-64	10	0.1
Dysprosium-165	100	1.
Dysprosium-166	10	0.1
Erbium-169	10	0.1
Erbium-171	10	0.1
Europium-152 (9.2 h)	10	0.1
Europium-152 (13 y)	0.1	0.001

Radioactive Material	Column I curies	Column II curies
Europium-154	0.1	0.001
Europium-155	1	0.01
Fluorine-18	100	1.
Gadolinium-153	1	0.01
Gadolinium-159	10	0.1
Gallium-72	10	0.1
Germanium-71	100	1.
Gold-198	10	0.1
Gold-199	10	0.1
Hafnium-181	1	0.01
Holmium-166	10	0.1
Hydrogen-3	100	1.
Indium-113m	100	1.
Indium-114m	1	0.01
Indium-115m	100	1.
Indium-115	1	0.01
Iodine-125	0.1	0.001
Iodine-126	0.1	0.001
Iodine-129	0.1	0.001
Iodine-131	0.1	0.001
Iodine-132	10	0.1
Iodine-133	1	0.01
Iodine-134	10	0.1
Iodine-135	1	0.01
Iridium-192	1	0.01
Iridium-194	10	0.1
Iron-55	10	0.1
Iron-59	1	0.01
Krypton-85	100	1.
Krypton-87	10	0.1
Lanthanum-140	1	0.01
Lutetium-177	10	0.1
Manganese-52	1	0.01
Manganese-54	1	0.01
Manganese-56	10	0.1
Mercury-197m	10	0.1
Mercury-197	10	0.1
Mercury-203	1	0.01
Molybdenum-99	10	0.1
Neodymium-147	10	0.1
Neodymium-149	10	0.1
Nickel-59	10	0.1
Nickel-63	1	0.01
Nickel-65	10	0.1

Radioactive Material	Column I curies	Column II curies
Niobium-93m	1	0.01
Niobium-95	1	0.01
Niobium-97	100	1.
Osmium-185	1	0.01
Osmium-191m	100	1.
Osmium-191	10	0.1
Osmium-193	10	0.1
Palladium-103	10	0.1
Palladium-109	10	0.1
Phosphorus-32	1	0.01
Platinum-191	10	0.1
Platinum-193m	100	1.
Platinum-193	10	0.1
Platinum-197m	100	1.
Platinum-197	10	0.1
Polonium-210	0.01	0.0001
Potassium-42	1	0.01
Praseodymium-142	10	0.1
Praseodymium-143	10	0.1
Promethium-147	1	0.01
Promethium-149	10	0.1
Radium-226	0.01	0.0001
Rhenium-186	10	0.1
Rhenium-188	10	0.1
Rhodium-103m	1,000	10.
Rhodium-105	10	0.1
Rubidium-86	1	0.01
Rubidium-87	1	0.01
Ruthenium-97	100	1.
Ruthenium-103	1	0.01
Ruthenium-105	10	0.1
Ruthenium-106	0.1	0.001
Samarium-151	1	0.01
Samarium-153	10	0.1
Scandium-46	1	0.01
Scandium-47	10	0.1
Scandium-48	1	0.01
Selenium-75	1	0.01
Silicon-31	10	0.1
Silver-105	1	0.01
Silver-110m	0.1	0.001
Silver-111	10	0.1
Sodium-22	0.1	0.001
Sodium-24	1	0.01

Radioactive Material	Column I curies	Column II curies
Strontium-85m	1,000	10.
Strontium-85	1	0.01
Strontium-89	1	0.01
Strontium-90	0.01	0.0001
Strontium-91	10	0.1
Strontium-92	10	0.1
Sulphur-35	10	0.1
Tantalum-182	1	0.01
Technetium-96	10	0.1
Technetium-97m	10	0.1
Technetium-97	10	0.1
Technetium-99m	100	1.
Technetium-99	1	0.01
Tellurium-125m	1	0.01
Tellurium-127m	1	0.01
Tellurium-127	10	0.1
Tellurium-129m	1	0.01
Tellurium-129	100	1.
Tellurium-131m	10	0.1
Tellurium-132	1	0.01
Terbium-160	1	0.01
Thallium-200	10	0.1
Thallium-201	10	0.1
Thallium-202	10	0.1
Thallium-204	1	0.01
Thulium-170	1	0.01
Thulium-171	1	0.01
Tin-113	1	0.01
Tin-125	1	0.01
Tungsten-181	1	0.01
Tungsten-185	1	0.01
Tungsten-187	10	0.1
Vanadium-48	1	0.01
Xenon-131m	1,000	10.
Xenon-133	100	1.
Xenon-135	100	1.
Ytterbium-175	10	0.1
Yttrium-90	1	0.01
Yttrium-91	1	0.01
Yttrium-92	10	0.1
Yttrium-93	1	0.01
Zinc-65	1	0.01

Radioactive Material	Column I curies	Column II curies
Zinc-69m	10	0.1
Zinc-69	100	1.
Zirconium-93	1	0.01
Zirconium-95	1	0.01
Zirconium-97	1	0.01
Any radioactive material other than source material, special nuclear material, or alpha-emitting radioactive material not listed above.	0.1	0.001

NOTE 1: To convert curies (Ci) to SI units of gigabecquerels (GBq), multiply the above values by 37.

EXAMPLE: Zirconium-97 (Col. II) (0.01 Ci multiplied by 37 is equivalent to 0.37 GBq).

CHAPTER 39—APPENDIX E
DETERMINATION OF A_1 AND A_2
Rescinded IAB 4/5/00, effective 5/10/00

CHAPTER 39—APPENDIX F
CRITERIA RELATING TO USE OF FINANCIAL TESTS AND PARENT COMPANY GUARANTEES FOR PROVIDING REASONABLE ASSURANCE OF FUNDS FOR DECOMMISSIONING

I. Introduction.

An applicant or licensee may provide reasonable assurance of the availability of funds for decommissioning based on obtaining a parent company guarantee that funds will be available for decommissioning costs and on a demonstration that the parent company passes a financial test. This appendix establishes criteria for passing the financial test and for obtaining the parent company guarantee.

II. Financial Test.

A. To pass the financial test, the parent company must meet the criteria of either paragraph A.1 or A.2 of this section:

1. The parent company must have:

(1) Two of the following three ratios: A ratio of total liabilities to net worth less than 2.0; a ratio of the sum of net income plus depreciation, depletion, and amortization to total liabilities greater than 0.1; a ratio of current assets to current liabilities greater than 1.5; and

(2) Net working capital and tangible net worth each at least six times the current decommissioning cost estimates (or prescribed amount if a certification is used); and

(3) Tangible net worth of at least $10 million; and

(4) Assets located in the United States amounting to at least 90 percent of total assets or at least six times the current decommissioning cost estimates (or prescribed amount if a certification is used).

2. The parent company must have:

(1) A current rating for its most recent bond issuance of AAA, AA, A, or BBB as issued by Standard and Poor's or Aaa, Aa, or Baa as issued by Moody's; and

(2) Tangible net worth at least six times the current decommissioning cost estimate (or prescribed amount if a certification is used); and

(3) Tangible net worth of at least $10 million; and

(4) Assets located in the United States amounting to at least 90 percent of total assets or at least six times the current decommissioning cost estimates (or prescribed amount if a certification is used).

B. The parent company's independent certified public accountant must have compared the data used by the parent company in the financial test, which is derived from the independently audited, year-end financial statements for the latest fiscal year, with the amounts in such financial statement. In connection with that procedure the licensee shall inform BRH within 90 days or any matters coming to the auditor's attention which cause the auditor to believe that the data specified in the financial test should be adjusted and that the company no longer passes the test.

C.1. After the initial financial test, the parent company must repeat the passage of the test within 90 days after the close of each succeeding fiscal year.

2. If the parent company no longer meets the requirements of paragraph A of this section, the licensee must send notice to the BRH of intent to establish alternate financial assurance as specified in BRH rules. The notice must be sent by certified mail within 90 days after the end of the fiscal year for which the year-end financial data show that the parent company no longer meets the financial test requirements. The licensee must provide alternate financial assurance within 120 days after the end of such fiscal year.

III. Parent Company Guarantee.

The terms of a parent company guarantee which an applicant or licensee obtains must provide that:

A. The parent company guarantee will remain in force unless the guarantor sends notice of cancellation by certified mail to the licensee and the BRH. Cancellation may not occur, however, during the 120 days beginning on the date of receipt of the notice of cancellation by both the licensee and BRH, as evidenced by the return receipts.

B. If the licensee fails to provide alternate financial assurance as specified in BRH rules within 90 days after receipt by the licensee and BRH notice of cancellation of the parent company guarantee from the guarantor, the guarantor will provide such alternative financial assurance in the name of the licensee.

C. The parent company guarantee and financial test provisions must remain in effect until the BRH has terminated the license.

D. If a trust is established for decommissioning costs, the trustee and trust must be acceptable to BRH. An acceptable trustee includes an appropriate state or federal government agency or an entity which has the authority to act as a trustee and whose trust operations are regulated and examined by a federal or state agency.

CHAPTER 39—APPENDIX G

QUANTITIES OF RADIOACTIVE MATERIALS REQUIRING CONSIDERATION OF THE NEED FOR AN EMERGENCY PLAN FOR RESPONDING TO A RELEASE

Radioactive Material	Release Fraction	Quantity (curies)
Actinium-228	0.001	4,000
Americium-241	.001	2
Americium-242	.001	2
Americium-243	.001	2
Antimony-124	.01	4,000
Antimony-126	.01	6,000
Barium-133	.01	10,000
Barium-140	.01	30,000
Bismuth-207	.01	5,000
Bismuth-210	.01	600
Cadmium-109	.01	1,000
Cadmium-113	.01	80
Calcium-45	.01	20,000
Californium-252	.001	9 (20 mg)
Carbon-14	.01	50,000
	Non CO	
Cerium-141	.01	10,000
Cerium-144	.01	300
Cesium-134	.01	2,000
Cesium-137	.01	3,000
Chlorine-36	.5	100
Chromium-51	.01	300,000
Cobalt-60	.001	5,000
Copper-64	.01	200,000
Curium-242	.001	60
Curium-243	.001	3
Curium-244	.001	4
Curium-245	.001	2
Europium-152	.01	500
Europium-154	.01	400
Europium-155	.01	3,000
Germanium-68	.01	2,000
Gadolinium-153	.01	5,000
Gold-198	.01	30,000
Hafnium-172	.01	400
Hafnium-173	.01	7,000
Holmium-166m	.01	100
Hydrogen-3	.5	20,000
Iodine-125	.5	10
Iodine-131	.5	10

Radioactive Material	Release Fraction	Quantity (curies)
Indium-114m	.01	1,000
Iridium-192	.001	40,000
Iron-55	.01	40,000
Iron-59	.01	7,000
Krypton-85	1.0	6,000,000
Lead-210	.01	8
Manganese-58	.01	60,000
Mercury-203	.01	10,000
Molybdenum-99	.01	30,000
Neptunium-237	.001	2
Nickel-63	.01	20,000
Niobium-94	.01	300
Phosphorus-32	.5	100
Phosphorus-33	.5	1,000
Polonium-210	.01	10
Potassium-42	.01	9,000
Promethium-145	.01	4,000
Promethium-147	.01	4,000
Radium-226	.001	100
Ruthenium-106	.01	200
Samarium-151	.01	4,000
Scandium-46	.01	3,000
Selenium-75	.01	10,000
Silver-110m	.01	1,000
Sodium-22	.01	9,000
Sodium-24	.01	10,000
Strontium-89	.01	3,000
Strontium-90	.01	90
Sulfur-35	.5	900
Technetium-99	.01	10,000
Technetium-99m	.01	400,000
Tellurium-127m	.01	5,000
Tellurium-129m	.01	5,000
Terbium-160	.01	4,000
Thulium-170	.01	4,000
Tin-113	.01	10,000
Tin-123	.01	3,000
Tin-126	.01	1,000
Titanium-44	.01	100
Vanadium-48	.01	7,000
Xenon-133	1.0	900,000
Yttrium-91	.01	2,000
Zinc-65	.01	5,000
Zirconium-93	.01	400

Radioactive Material	Release Fraction	Quantity (curies)
Zirconium-95	.01	5,000
Any other beta-gamma emitter	.01	10,000
Mixed fission products	.01	1,000
Mixed corrosion products	.01	10,000
Contaminated equipment, beta-gamma	.001	10,000
Irradiated material, any form other than solid noncombustible	.01	1,000
Irradiated material, solid noncombustible	.001	10,000
Mixed radioactive waste, beta-gamma	.01	1,000
Packaged mixed waste, beta-gamma[2]	.001	10,000
Any other alpha emitter	.001	2
Contaminated equipment, alpha	.0001	20
Packaged waste, alpha[2]	.0001	20
Combinations of radioactive materials listed above[1]	——	——

[1] For combinations of radioactive materials, consideration of the need for an emergency plan is required if the sum of the ratios of the quantity of each radioactive material authorized to the quantity listed for that material in Appendix G exceeds one.
[2] Waste packaged in Type B containers does not require an emergency plan.
[**ARC 8982B**, IAB 8/11/10, effective 9/15/10]

CHAPTER 39—APPENDIX H
CRITERIA RELATING TO USE OF FINANCIAL TESTS AND SELF-GUARANTEES FOR PROVIDING REASONABLE ASSURANCE OF FUNDS FOR DECOMMISSIONING

I. Introduction

An applicant or licensee may provide reasonable assurance of the availability of funds for decommissioning based on furnishing its own guarantee that funds will be available for decommissioning costs and on a demonstration that the company passes the financial test of Section II of this appendix. The terms of the self-guarantee are in Section III of this appendix. This appendix establishes criteria for passing the financial test for the self-guarantee and establishes the terms for a self-guarantee.

II. Financial Test

A. To pass the financial test, a company must meet all of the following criteria:

1. Tangible net worth at least ten times the total current decommissioning cost estimate for the total of all facilities or parts thereof (or the current amount required if certification is used).

2. Assets located in the United States amounting to at least 90 percent of total assets or at least ten times the total current decommissioning cost estimate for the total of all facilities or parts thereof (or the current amount required if certification is used).

3. A current rating for its most recent bond issuance of AAA, AA, or A as issued by Standard and Poor's (S&P) or Aaa, Aa, or A as issued by Moody's.

B. To pass the financial test, a company must meet all of the following additional requirements:

1. The company must have at least one class of equity securities registered under the Securities Exchange Act of 1934.

2. The company's independent certified public accountant must have compared the data used by the company in the financial test, which is derived from the independently audited, year-end financial statements for the latest fiscal year, with the amounts in such financial statement. In connection with that procedure, the licensee shall inform the agency within 90 days of any matters coming to the attention of the auditor that cause the auditor to believe that the data specified in the financial test should be adjusted and that the company no longer passes the test.

3. After the initial financial test, the company must repeat passage of the test within 90 days after the close of each succeeding fiscal year.

C. If the licensee no longer meets the requirements of Section II.A. of this appendix, the licensee must send immediate notice to the agency of its intent to establish alternate financial assurance as specified in these rules within 120 days of such notice.

III. Company Self-Guarantee

The terms of a self-guarantee which an applicant or licensee furnishes must provide that:

A. The guarantee will remain in force unless the licensee sends notice of cancellation by certified mail, return receipt requested, to the agency. Cancellation may not occur, however, during the 120 days beginning on the date of receipt of the notice of cancellation by the agency, as evidenced by the return receipt.

B. The licensee shall provide alternative financial assurance as specified in these rules within 90 days following receipt by the agency of a notice of cancellation of the guarantee.

C. The guarantee and financial test provisions must remain in effect until the agency has terminated the license or until another financial assurance method acceptable to the agency has been put in effect by the licensee.

D. The licensee will promptly forward to the agency and the licensee's independent auditor all reports covering the latest fiscal year filed by the licensee with the Securities and Exchange Commission pursuant to the requirements of Section 13 of the Securities and Exchange Act of 1934.

E. If, at any time, the licensee's most recent bond issuance ceases to be rated in any category of "A" or above by either Standard and Poor's or Moody's, the licensee will provide notice in writing of such fact to the agency within 20 days after publication of the change by the rating service. If the licensee's most recent bond issuance ceases to be rated in any category of "A" or above by both Standard and Poor's and Moody's, the licensee no longer meets the requirements of Section II.A. of this appendix.

F. The applicant or licensee must provide to the agency a written guarantee (a written commitment by a corporate officer) which states that the licensee will fund and carry out the required decommissioning activities or, upon issuance of an order by the agency, the licensee will set up and fund a trust in the amount of the current cost estimates for decommissioning.

CHAPTER 39—APPENDIX I
CRITERIA RELATING TO USE OF FINANCIAL TESTS AND SELF-GUARANTEES FOR PROVIDING REASONABLE ASSURANCE OF FUNDS FOR DECOMMISSIONING BY COMMERCIAL COMPANIES THAT HAVE NO OUTSTANDING RATED BONDS

I. Introduction

An applicant or licensee may provide reasonable assurance of the availability of funds for decommissioning based on furnishing its own guarantee that funds will be available for decommissioning costs and on a demonstration that the company passes the financial test of Section II of this appendix. The terms of the self-guarantee are in Section III of this appendix. This appendix establishes criteria for passing the financial test for the self-guarantee and establishes the terms for a self-guarantee.

II. Financial Test

A. To pass the financial test, a company must meet the following criteria:

1. Tangible net worth greater than $10 million, or at least ten times the total current decommissioning cost estimate (or the current amount required if certification is used), whichever is greater, for all decommissioning activities for which the company is responsible as self-guaranteeing licensee and as parent-guarantor.

2. Assets located in the United States amounting to at least 90 percent of total assets or at least ten times the total current decommissioning cost estimate (or the current amount required if certification is used) for all decommissioning activities for which the company is responsible as self-guaranteeing licensee and as parent-guarantor.

3. A ratio of cash flow divided by total liabilities greater than 0.15 and a ratio of total liabilities divided by net worth less than 1.5.

B. In addition, to pass the financial test, a company must meet all of the following requirements:

1. The company's independent certified public accountant must have compared the data used by the company in the financial test, which is required to be derived from the independently audited year-end financial statement based on United States generally accepted accounting practices for the latest fiscal year, with the amounts in such financial statement. In connection with that procedure, the licensee shall inform the agency within 90 days of any matters that may cause the auditor to believe that the data specified in the financial test should be adjusted and that the company no longer passes the test.

2. After the initial financial test, the company must repeat passage of the test within 90 days after the close of each succeeding fiscal year.

3. If the licensee no longer meets the requirements of Section II.A. of this appendix, the licensee must send notice to the agency of intent to establish alternative financial assurance as specified in these rules. The notice must be sent by certified mail, return receipt requested, within 90 days after the end of the fiscal year for which the year-end financial data show that the licensee no longer meets the financial test requirements. The licensee must provide alternative financial assurance within 120 days after the end of such fiscal year.

III. Company Self-Guarantee

The terms of a self-guarantee which an applicant or licensee furnishes must provide that:

A. The guarantee shall remain in force unless the licensee sends notice of cancellation by certified mail, return receipt requested, to the agency. Cancellation may not occur until an alternative financial assurance mechanism is in place.

B. The licensee shall provide alternative financial assurance as specified in the regulations within 90 days following receipt by the agency of a notice of cancellation of the guarantee.

C. The guarantee and financial test provisions must remain in effect until the agency has terminated the license or until another financial assurance method acceptable to the agency has been put in effect by the licensee.

D. The applicant or licensee must provide to the agency a written guarantee (a written commitment by a corporate officer) which states that the licensee will fund and carry out the required decommissioning activities or, upon issuance of an order by the agency, the licensee will set up and fund a trust in the amount of the current cost estimates for decommissioning.

CHAPTER 39—APPENDIX J
CRITERIA RELATING TO USE OF FINANCIAL TESTS AND SELF-GUARANTEES FOR PROVIDING REASONABLE ASSURANCE OF FUNDS FOR DECOMMISSIONING BY NONPROFIT COLLEGES, UNIVERSITIES, AND HOSPITALS

I. Introduction

An applicant or licensee may provide reasonable assurance of the availability of funds for decommissioning based on furnishing its own guarantee that funds will be available for decommissioning costs and on a demonstration that the applicant or licensee passes the financial test of Section II of this appendix. The terms of the self-guarantee are in Section III of this appendix. This appendix establishes criteria for passing the financial test for the self-guarantee and establishes the terms for a self-guarantee.

II. Financial Test

A. For colleges and universities to pass the financial test, a college or university must meet either the criteria in Section II.A.1. or the criteria in Section II.A.2. of this appendix.

1. For applicants or licensees that issue bonds, a current rating for its most recent uninsured, uncollateralized, and unencumbered bond issuance of AAA, AA, or A as issued by Standard and Poor's (S&P) or Aaa, Aa, or A as issued by Moody's.

2. For applicants or licensees that do not issue bonds, unrestricted endowment consisting of assets located in the United States of at least $50 million, or at least 30 times the total current decommissioning cost estimate (or the current amount required if certification is used), whichever is greater, for all decommissioning activities for which the college or university is responsible as a self-guaranteeing licensee.

B. For hospitals to pass the financial test, a hospital must meet either the criteria in Section II.B.1. or the criteria in Section II.B.2. of this appendix:

1. For applicants or licensees that issue bonds, a current rating for its most recent uninsured, uncollateralized, and unencumbered bond issuance of AAA, AA, or A as issued by Standard and Poor's (S&P) or Aaa, Aa, or A as issued by Moody's.

2. For applicants or licensees that do not issue bonds, all the following tests must be met:

(a) (Total revenues less total expenditures) divided by total revenues must be equal to or greater than 0.04.

(b) Long-term debt divided by net fixed assets must be less than or equal to 0.67.

(c) (Current assets and depreciation fund) divided by current liabilities must be greater than or equal to 2.55.

(d) Operating revenues must be at least 100 times the total current decommissioning cost estimate (or the current amount required if certification is used) for all decommissioning activities for which the hospital is responsible as a self-guaranteeing licensee.

C. In addition, to pass the financial test, a licensee must meet all the following requirements:

1. The licensee's independent certified public accountant must have compared the data used by the licensee in the financial test, which is required to be derived from the independently audited year-end financial statements, based on United States generally accepted accounting practices, for the latest fiscal year, with the amounts in such financial statement. In connection with that procedure, the licensee shall inform this agency within 90 days of any matters coming to the attention of the auditor that cause the auditor to believe that the data specified in the financial test should be adjusted and that the licensee no longer passes the test.

2. After the initial financial test, the licensee must repeat passage of the test within 90 days after the close of each succeeding fiscal year.

3. If the licensee no longer meets the requirements of Section I of this appendix, the licensee must send notice to this agency of its intent to establish alternative financial assurance as specified in these rules. The notice must be sent by certified mail, return receipt requested, within 90 days after the end of the fiscal year for which the year-end financial data show that the licensee no longer meets the financial test requirements. The licensee must provide alternate financial assurance within 120 days after the end of such fiscal year.

III. Self-Guarantee

The terms of a self-guarantee which an applicant or licensee furnishes must provide that:

A. The guarantee shall remain in force unless the licensee sends notice of cancellation by certified mail, return receipt requested, to the agency. Cancellation may not occur until an alternative financial assurance mechanism is in place.

B. The licensee shall provide alternative financial assurance as specified in these rules within 90 days following receipt by the agency of a notice of cancellation of the guarantee.

C. The guarantee and financial test provisions must remain in effect until the agency has terminated the license or until another financial assurance method acceptable to the agency has been put in effect by the licensee.

D. The applicant or licensee must provide to the agency a written guarantee (a written commitment by a corporate officer or officer of the institution) which states that the licensee will fund and carry out the required decommissioning activities or, upon issuance of an order by the agency, the licensee will set up and fund a trust in the amount of the current cost estimates for decommissioning.

E. If, at any time, the licensee's most recent bond issuance ceases to be rated in any category of "A" or above by either Standard and Poor's or Moody's, the licensee shall provide notice in writing of such fact to the agency within 20 days after publication of the change by the rating service.

These rules are intended to implement Iowa Code chapter 136C.

[Filed 4/7/80, Notice 2/6/80—published 4/30/80, effective 7/1/80, see 39.18 for exception]
[Filed 5/17/85, Notice 2/27/85—published 6/5/85, effective, see rule 39.94]
[Filed 11/24/86, Notice 10/8/86—published 12/2/87, effective 1/6/88]
[Filed 11/6/87, Notice 9/23/87—published 12/2/87, effective 1/6/88]
[Filed emergency 3/15/90 after Notice 1/10/90—published 4/4/90, effective 3/15/90]
[Filed 7/16/92, Notice 5/27/92—published 8/5/92, effective 9/9/92]
[Filed 7/14/94, Notice 6/8/94—published 8/3/94, effective 9/7/94]
[Filed 5/15/95, Notice 3/29/95—published 6/7/95, effective 7/12/95]
[Filed 9/16/96, Notice 7/17/96—published 10/9/96, effective 11/16/96]
[Filed 5/16/97, Notice 4/9/97—published 6/4/97, effective 7/9/97]
[Filed 3/18/98, Notice 1/14/98—published 4/8/98, effective 7/1/98]
[Filed 4/2/99, Notice 1/13/99—published 4/21/99, effective 7/1/99]
[Filed 3/15/00, Notice 1/26/00—published 4/5/00, effective 5/10/00]
[Filed 3/16/01, Notice 2/7/01—published 4/4/01, effective 5/9/01]
[Filed 5/10/01, Notice 4/4/01—published 5/30/01, effective 7/4/01]
[Filed 3/14/02, Notice 2/6/02—published 4/3/02, effective 5/8/02]
[Filed 11/15/02, Notice 10/2/02—published 12/11/02, effective 1/15/03]
[Filed 3/14/03, Notice 2/5/03—published 4/2/03, effective 5/7/03]
[Filed 3/12/04, Notice 2/4/04—published 3/31/04, effective 5/5/04]
[Filed 3/11/05, Notice 2/2/05—published 3/30/05, effective 5/4/05]
[Filed 3/9/06, Notice 2/1/06—published 3/29/06, effective 5/3/06]
[Filed 3/16/07, Notice 1/31/07—published 4/11/07, effective 5/16/07]
[Filed 7/13/07, Notice 6/6/07—published 8/1/07, effective 9/5/07]
[Filed 5/14/08, Notice 4/9/08—published 6/4/08, effective 7/9/08]
[Filed ARC 7983B (Notice ARC 7792B, IAB 5/20/09), IAB 7/29/09, effective 9/2/09]
[Filed ARC 8982B (Notice ARC 8762B, IAB 5/19/10), IAB 8/11/10, effective 9/15/10]
[Filed ARC 1479C (Notice ARC 1414C, IAB 4/2/14), IAB 6/11/14, effective 7/16/14]
[Filed ARC 1639C (Notice ARC 1470C, IAB 5/28/14), IAB 10/1/14, effective 11/5/14]

CHAPTER 40
STANDARDS FOR PROTECTION AGAINST RADIATION

GENERAL PROVISIONS

641—40.1(136C) Purpose and scope.

40.1(1) This chapter establishes standards for protection against ionizing radiation resulting from activities conducted pursuant to licenses or registrations issued by the agency. These rules are issued pursuant to the authority in Iowa Code section 136C.3 and 136C.4.

40.1(2) The requirements of this chapter are designed to control the receipt, possession, use, transfer, and disposal of sources of radiation by any licensee or registrant so the total dose to an individual, including doses resulting from all sources of radiation other than background radiation, does not exceed the standards for protection against radiation prescribed in this chapter. However, nothing in this chapter shall be construed as limiting actions that may be necessary to protect health and safety.

40.1(3) In addition to complying with the requirements set forth in this chapter, every reasonable effort should be made to maintain radiation exposures and releases of radioactive material in effluents to unrestricted areas as low as is reasonably achievable (ALARA). The term "as low as is reasonably achievable" means as low as is reasonably achievable taking into account the state of technology and the economics of improvements in relation to benefits to the public health and safety, other societal and socioeconomic considerations, and in relation to the utilization of ionizing radiation in the public interest.

40.1(4) Except as specifically provided in other parts of these rules, this chapter applies to persons licensed or registered by the agency to receive, possess, use, transfer, or dispose of sources of radiation. The limits in this chapter do not apply to doses due to background radiation, to exposure of patients to radiation for the purpose of medical diagnosis or therapy, or to voluntary participation in medical research programs.

40.1(5) All references to any Code of Federal Regulations (CFR) in this chapter are those in effect as of November 5, 2014.

40.1(6) The provisions of Chapter 40 are in addition to, and not in substitution for, any other applicable portions of 641—Chapters 38 to 45.

[**ARC 8982B**, IAB 8/11/10, effective 9/15/10; **ARC 1639C**, IAB 10/1/14, effective 11/5/14]

641—40.2(136C) Definitions.

40.2(1) For the purposes of this chapter, the definitions of 641—Chapter 38 may also apply.

40.2(2) As used in this chapter, these terms have the definitions set forth below.

"Annual limit on intake (ALI)" means the derived limit for the amount of radioactive material taken into the body of an adult worker by inhalation or ingestion in a year. ALI is the smaller value of intake of a given radionuclide in a year by the reference person that would result in a committed effective dose equivalent of 5 rem (0.05 Sv) or a committed dose equivalent of 50 rem (0.5 Sv) to any individual organ or tissue. ALI values for intake by ingestion and by inhalation of selected radionuclides are given in Table I, Columns 1 and 2, of Appendix B.

"Class (or lung class or inhalation class)" means a classification scheme for inhaled material according to its rate of clearance from the pulmonary region of the lung. Materials are classified as D, W, or Y, which applies to a range of clearance half-times: for Class D, Days, of less than 10 days, for Class W, Weeks, from 10 to 100 days, and for Class Y, Years, of greater than 100 days.

"Declared pregnant woman" means a woman who has voluntarily informed her licensee or registrant, in writing, of her pregnancy and the estimated date of conception. The declaration remains in effect until the declared pregnant woman withdraws the declaration in writing or is no longer pregnant.

"Derived air concentration (DAC)" means the concentration of a given radionuclide in air which, if breathed by the reference person for a working year of 2,000 hours under conditions of light work (inhalation rate 1.2 cubic meters of air per hour) results in an intake of one ALI. DAC values are given in Table I, Column 3, of Appendix B.

"Derived air concentration-hour (DAC-hour)" means the product of the concentration of radioactive material in air, expressed as a fraction or multiple of the derived air concentration for each radionuclide, and the time of exposure to that radionuclide, in hours. A licensee or registrant may take 2,000 DAC-hours to represent one ALI, equivalent to a committed dose equivalent of 5 rem (0.05 Sv).

"Dosimetry processor" means an individual or an organization that processes and evaluates individual monitoring devices in order to determine the radiation dose delivered to the monitoring devices.

"Inhalation class" (see "Class.")

"Lung class" (see "Class.")

"National tracked source" means a sealed source containing a quantity equal to or greater than Category 1 or Category 2 levels of any radioactive material listed in Appendix H of this chapter. In this context a "sealed source" is defined as radioactive material that is sealed in a capsule or closely bonded in a solid form and that is not exempt from regulatory control. It does not mean material encapsulated solely for disposal, or nuclear material contained in any fuel assembly, subassembly, fuel rod, or fuel pellet. Category 1 nationally tracked sources are those containing radioactive material at a quantity equal to or greater than the Category 1 threshold. Category 2 nationally tracked sources are those containing radioactive material at a quantity equal to or greater than the Category 2 threshold but less than the Category 1 threshold.

"Nonstochastic effect" means a health effect, the severity of which varies with the dose and for which a threshold is believed to exist. Radiation-induced cataract formation is an example of a nonstochastic effect. For purposes of these rules, "deterministic effect" is an equivalent term.

"Planned special exposure" means an infrequent exposure to radiation, separate from and in addition to the annual occupational dose limits.

"Quarter" means a period of time equal to one-fourth of the year observed by the licensee, approximately 13 consecutive weeks, providing that the beginning of the first quarter in a year coincides with the starting date of the year and that no day is omitted or duplicated in consecutive quarters.

"Reference person" means a hypothetical aggregation of human physical and physiological characteristics determined by international consensus. These characteristics may be used by researchers and public health workers to standardize results of experiments and to relate biological insult to a common base. A description of the reference person is contained in the International Commission on Radiological Protection report, ICRP Publication 23, "Report of the Task Group on Reference Man."

"Respiratory protective equipment" means an apparatus, such as a respirator, used to reduce an individual's intake of airborne radioactive materials.

"Sanitary sewerage" means a system of public sewers for carrying off wastewater and refuse, but excluding sewage treatment facilities, septic tanks, and leach fields owned or operated by the licensee or registrant.

"Stochastic effect" means a health effect that occurs randomly and for which the probability of the effect occurring, rather than its severity, is assumed to be a linear function of dose without threshold. Hereditary effects and cancer incidence are examples of stochastic effects. For purposes of these rules, "probabilistic effect" is an equivalent term.

"Weighting factor" w_T for an organ or tissue (T) means the proportion of the risk of stochastic effects resulting from irradiation of that organ or tissue to the total risk of stochastic effects when the whole body is irradiated uniformly. For calculating the effective dose equivalent, the values of w_T are:

ORGAN DOSE WEIGHTING FACTORS

Organ or Tissue	w_T
Gonads	0.25
Breast	0.15
Red bone marrow	0.12
Lung	0.12
Thyroid	0.03
Bone surfaces	0.03
Remainder	0.30[a]
Whole Body	1.00[b]

[a]0.30 results from 0.06 for each of 5 "remainder" organs, excluding the skin and the lens of the eye, that receive the highest doses.

[b]For the purpose of weighting the external whole body dose, for adding it to the internal dose, a single weighting factor, w_T = 1.0, has been specified. The use of other weighting factors for external exposure will be approved on a case-by-case basis until such time as specific guidance is issued.

641—40.3(136C) Implementation.

40.3(1) Any existing license or registration condition that is more restrictive than this chapter remains in force until there is an amendment or renewal of the license or registration.

40.3(2) If a license or registration condition exempts a licensee or registrant from a provision of this chapter in effect on or before January 1, 1994, it also exempts the licensee or registrant from the corresponding provision of this chapter.

40.3(3) If a license or registration condition cites provisions of this chapter in effect prior to January 1, 1994, which do not correspond to any provisions of this chapter, the license or registration condition remains in force until there is an amendment or renewal of the license or registration that modifies or removes this condition.

641—40.4 to **40.9** Reserved.

RADIATION PROTECTION PROGRAMS

641—40.10(136C) Radiation protection programs.

40.10(1) Each licensee or registrant shall develop, document, and implement a radiation protection program sufficient to ensure compliance with the provisions of this chapter. See 40.81(136C) for record-keeping requirements relating to these programs.

40.10(2) The licensee or registrant shall use, to the extent practical, procedures and engineering controls based upon sound radiation protection principles to achieve occupational doses and public doses that are as low as is reasonably achievable (ALARA).

40.10(3) The licensee or registrant shall, at intervals not to exceed 12 months, review the radiation protection program content and implementation.

40.10(4) To implement the ALARA requirements of 40.10(2), and notwithstanding the requirements in 641—40.26(136C), a constraint on air emissions of radioactive material to the environment, excluding radon-222 and its daughters, shall be established by licensees such that the individual member of the public likely to receive the highest dose will not be expected to receive a total effective dose equivalent in excess of 10 mrem (0.1 mSv) per year from these emissions. If a licensee subject to this requirement exceeds this dose constraint, the licensee shall report the exceedance as provided in 641—40.97(136C) and promptly take appropriate corrective action to ensure against recurrence.

641—40.11 to **40.14** Reserved.

OCCUPATIONAL DOSE LIMITS

641—40.15(136C) Occupational dose limits for adults.

40.15(1) The licensee or registrant shall control the occupational dose to individual adults, except for planned special exposures pursuant to 40.20(136C), to the following dose limits:

a. An annual limit, which is the more limiting of:

(1) The total effective dose equivalent being equal to 5 rem (0.05 Sv); or

(2) The sum of the deep dose equivalent and the committed dose equivalent to any individual organ or tissue other than the lens of the eye being equal to 50 rem (0.5 Sv).

b. The annual limits to the lens of the eye, to the skin of the whole body, and to the skin of the extremities which are:

(1) A lens dose equivalent of 15 rem (0.15 Sv), and

(2) A shallow dose equivalent of 50 rem (0.5 Sv) to the skin of the whole body or to the skin of any extremity.

40.15(2) Doses received in excess of the annual limits, including doses received during accidents, emergencies, and planned special exposures, shall be subtracted from the limits for planned special exposures that the individual may receive during the current year and during the individual's lifetime. See 40.20(5)*"a"* and *"b."*

40.15(3) When the external exposure is determined by measurement with an external personal monitoring device, the deep dose equivalent must be used in place of the effective dose equivalent, unless the effective dose equivalent is determined by a dosimetry method approved by the agency. The assigned deep dose equivalent must be for the part of the body receiving the highest exposure. The assigned shallow dose equivalent must be the dose averaged over the contiguous 10 square centimeters of skin receiving the highest exposure. The deep dose equivalent, lens dose equivalent, and shallow dose equivalent may be assessed from surveys or other radiation measurements for the purpose of demonstrating compliance with the occupational dose limits, if the individual monitoring device was not in the region of highest potential exposure, or the results of individual monitoring are unavailable.

40.15(4) Derived air concentration (DAC) and annual limit on intake (ALI) values are presented in Table I of Appendix B and may be used to determine the individual's dose and to demonstrate compliance with the occupational dose limits. See 40.86(136C).

40.15(5) Notwithstanding the annual dose limits, the licensee shall limit the soluble uranium intake by an individual to 10 milligrams in a week in consideration of chemical toxicity. See footnote 3 of Appendix B.

40.15(6) The licensee or registrant shall reduce the dose that an individual may be allowed to receive in the current year by the amount of occupational dose received while employed by any other person. See 40.19(5).

[**ARC 8982B**, IAB 8/11/10, effective 9/15/10]

641—40.16(136C) Compliance with requirements for summation of external and internal doses.

40.16(1) If the licensee or registrant is required to monitor pursuant to both 40.19(1) and 40.19(2), the licensee or registrant shall demonstrate compliance with the dose limits by summing external and internal doses. If the licensee or registrant is required to monitor only pursuant to 40.19(1), or only pursuant to 40.19(2), then summation is not required to demonstrate compliance with the dose limits. The licensee or registrant may demonstrate compliance with the requirements for summation of external and internal doses pursuant to 40.16(2), 40.16(3) and 40.16(4). The dose equivalents for the lens of the eye, the skin, and the extremities are not included in the summation, but are subject to separate limits.

40.16(2) Intake by inhalation. If the only intake of radionuclides is by inhalation, the total effective dose equivalent limit is not exceeded if the sum of the deep dose equivalent divided by the total effective dose equivalent limit, and one of the following, does not exceed unity:

a. The sum of the fractions of the inhalation ALI for each radionuclide, or

b. The total number of derived air concentration-hours (DAC-hours) for all radionuclides divided by 2,000, or

c. The sum of the calculated committed effective dose equivalents to all significantly irradiated organs or tissues (T) calculated from bioassay data using appropriate biological models and expressed as a fraction of the annual limit. For purposes of this requirement, an organ or tissue is deemed to be significantly irradiated if, for that organ or tissue, the product of the weighting factors, w_T, and the committed dose equivalent, $H_{T,50}$, per unit intake is greater than 10 percent of the maximum weighted value of H_{50}, that is, $w_T H_{T,50}$, per unit intake for any organ or tissue.

40.16(3) Intake by oral ingestion. If the occupationally exposed individual also receives an intake of radionuclides by oral ingestion greater than 10 percent of the applicable oral ALI, the licensee shall account for this intake and include it in demonstrating compliance with the limits.

40.16(4) Intake through wounds or absorption through skin. The licensee shall evaluate and, to the extent practical, account for intakes through wounds or skin absorption. The intake through intact skin has been included in the calculation of DAC for hydrogen-3 and does not need to be evaluated or accounted for pursuant to this subrule.

641—40.17(136C) Determination of external dose from airborne radioactive material.

40.17(1) Licensees shall, when determining the dose from airborne radioactive material, include the contribution to the deep dose equivalent, lens dose equivalent, and shallow dose equivalent from external exposure to the radioactive cloud. See Appendix B, footnotes 1 and 2.

40.17(2) Airborne radioactivity measurements and DAC values shall not be used as the primary means to assess the deep dose equivalent when the airborne radioactive material includes radionuclides other than noble gases or if the cloud of airborne radioactive material is not relatively uniform. The determination of the deep dose equivalent to an individual shall be based upon measurements using instruments or individual monitoring devices.

641—40.18(136C) Determination of internal exposure.

40.18(1) For purposes of assessing dose used to determine compliance with occupational dose equivalent limits, the licensee shall, when required pursuant to 40.37(136C), take suitable and timely measurements of:

a. Concentrations of radioactive materials in air in work areas; or

b. Quantities of radionuclides in the body; or

c. Quantities of radionuclides excreted from the body; or

d. Combinations of these measurements.

40.18(2) Unless respiratory protective equipment is used, as provided in 40.50(136C), or the assessment of intake is based on bioassays, the licensee shall assume that an individual inhales radioactive material at the airborne concentration in which the individual is present.

40.18(3) When specific information on the physical and biochemical properties of the radionuclides taken into the body or the behavior of the material in an individual is known, the licensee may:

a. Use that information to calculate the committed effective dose equivalent, and, if used, the licensee shall document that information in the individual's record; and

b. Upon prior approval of the agency, adjust the DAC or ALI values to reflect the actual physical and chemical characteristics of airborne radioactive material, for example, aerosol size distribution or density; and

c. Separately assess the contribution of fractional intakes of Class D, W, or Y compounds of a given radionuclide to the committed effective dose equivalent. See Appendix B.

40.18(4) If the licensee chooses to assess intakes of Class Y material using the measurements given in 40.8(1)*"b"* or 40.8(1)*"c,"* the licensee may delay the recording and reporting of the assessments for periods up to seven months, unless otherwise required by 40.96(136C) or 40.97(136C). This delay permits the licensee to make additional measurements basic to the assessments.

40.18(5) If the identity and concentration of each radionuclide in a mixture are known, the fraction of the DAC applicable to the mixture for use in calculating DAC-hours shall be either:

a. The sum of the ratios of the concentration to the appropriate DAC value, that is, D, W, or Y, from Appendix B for each radionuclide in the mixture; or

b. The ratio of the total concentration for all radionuclides in the mixture to the most restrictive DAC value for any radionuclide in the mixture.

40.18(6) If the identity of each radionuclide in a mixture is known, but the concentration of one or more of the radionuclides in the mixture is not known, the DAC for the mixture shall be the most restrictive DAC of any radionuclide in the mixture.

40.18(7) When a mixture of radionuclides in air exists, a licensee may disregard certain radionuclides in the mixture if:

a. The licensee uses the total activity of the mixture in demonstrating compliance with the dose limits in 40.15(136C) and in complying with the monitoring requirements in 40.37(136C), and

b. The concentration of any radionuclide disregarded is less than 10 percent of its DAC, and

c. The sum of these percentages for all of the radionuclides disregarded in the mixture does not exceed 30 percent.

40.18(8) When determining the committed effective dose equivalent, the following information may be considered:

a. In order to calculate the committed effective dose equivalent, the licensee or registrant may assume that the inhalation of one ALI, or an exposure of 2,000 DAC-hours, results in a committed effective dose equivalent of 5 rem (0.05 Sv) for radionuclides that have their ALIs or DACs based on the committed effective dose equivalent.

b. For an ALI and the associated DAC determined by the nonstochastic organ dose limit of 50 rem (0.5 Sv), the intake of radionuclides that would result in a committed effective dose equivalent of 5 rem (0.05 Sv), that is, the stochastic ALI, is listed in parentheses in Table I of Appendix B. The licensee or registrant may, as a simplifying assumption, use the stochastic ALI to determine committed effective dose equivalent. However, if the licensee or registrant uses the stochastic ALI, the licensee or registrant shall also demonstrate that the limit in 40.15(1)*"a"*(2) is met.

641—40.19(136C) Determination of prior occupational dose.

40.19(1) For each individual who is likely to receive, in a year, an occupational dose requiring monitoring pursuant to this rule, the licensee or registrant shall:

a. Determine the occupational radiation dose received during the current year; and

b. Attempt to obtain the records of lifetime cumulative occupational radiation dose.

40.19(2) Prior to permitting an individual to participate in a planned special exposure, the licensee or registrant shall determine:

a. The internal and external doses from all previous planned special exposures; and

b. All doses in excess of the limits, including doses received during accidents and emergencies, received during the lifetime of the individual; and

c. All lifetime cumulative occupational radiation dose.

40.19(3) In complying with the requirements of 40.19(1), a licensee or registrant may:

a. Accept, as a record of the occupational dose that the individual received during the current year, a written signed statement from the individual, or from the individual's most recent employer for work involving radiation exposure, that discloses the nature and the amount of any occupational dose that the individual received during the current year; and

b. Accept, as the record of lifetime cumulative radiation dose, a form signed by the individual and countersigned by an appropriate official of the most recent employer for work involving radiation exposure, or the individual's current employer, if the individual is not employed by the licensee or registrant; and

c. Obtain reports of the individual's dose equivalent from the most recent employer for work involving radiation exposure, or the individual's current employer, if the individual is not employed by the licensee or registrant, by telephone, telegram, facsimile, or letter. The licensee or registrant shall request a written verification of the dose data if the authenticity of the transmitted report cannot be established.

40.19(4) *a.* The licensee or registrant shall record the exposure history, as required by 40.37(136C). The form or record shall show each period in which the individual received occupational exposure to

radiation or radioactive material and shall be signed by the individual who received the exposure. For each period for which the licensee or registrant obtains reports, the licensee or registrant shall use the dose shown in the report in preparing the exposure history. For any period in which the licensee or registrant does not obtain a report, the licensee or registrant shall place a notation on the report indicating the periods of time for which data are not available.

b. Licensees or registrants are not required to reevaluate the separate external dose equivalents and internal committed dose equivalents or intakes of radionuclides assessed pursuant to the rules in this chapter in effect on or before January 1, 1994. Further, occupational exposure histories obtained and recorded on or before January 1, 1994, would not have included effective dose equivalent, but may be used in the absence of specific information on the intake of radionuclides by the individual.

40.19(5) If the licensee or registrant is unable to obtain a complete record of an individual's current and previously accumulated occupational dose, the licensee or registrant shall assume:

a. In establishing administrative controls pursuant to 40.15(6) for the current year, that the allowable dose limit for the individual is reduced by 1.25 rem (12.5 mSv) for each quarter for which records were unavailable and the individual was engaged in activities that could have resulted in occupational radiation exposure; and

b. That the individual is not available for planned special exposures.

40.19(6) The licensee or registrant shall retain the records in 641—40.19(136C) until the agency terminates each pertinent license or registration requiring this record. The licensee or registrant shall retain records used in preparing any record for this subrule for three years after the record is made.

641—40.20(136C) Planned special exposures. A licensee or registrant may authorize an adult worker to receive doses in addition to and accounted for separately from the doses received under the limits specified in 40.15(136C) provided that each of the following conditions is satisfied:

40.20(1) The licensee or registrant authorizes a planned special exposure only in an exceptional situation when alternatives that might avoid the dose estimated to result from the planned special exposure are unavailable or impractical.

40.20(2) The licensee or registrant, and employer if the employer is not the licensee or registrant, specifically authorizes the planned special exposure, in writing, before the exposure occurs.

40.20(3) Before a planned special exposure, the licensee or registrant ensures that each individual involved is:

a. Informed of the purpose of the planned operation; and

b. Informed of the estimated doses and associated potential risks and specific radiation levels or other conditions that might be involved in performing the task; and

c. Instructed in the measures to be taken to keep the dose ALARA considering other risks that may be present.

40.20(4) Prior to permitting an individual to participate in a planned special exposure, the licensee or registrant ascertains prior doses as required by 40.19(2) during the lifetime of the individual for each individual involved.

40.20(5) Subject to 40.15(2), the licensee or registrant shall not authorize a planned special exposure that would cause an individual to receive a dose from all planned special exposures and all doses in excess of the limits to exceed:

a. The numerical values of any of the dose limits in 40.15(1) in any year; and

b. Five times the annual dose limits in 40.15(1) during the individual's lifetime.

40.20(6) The licensee or registrant maintains records of the conduct of a planned special exposure in accordance with 40.85(136C) and submits a written report in accordance with 40.98(136C).

40.20(7) The licensee or registrant records the best estimate of the dose resulting from the planned special exposure in the individual's record and informs the individual, in writing, of the dose within 30 days from the date of the planned special exposure. The dose from planned special exposures shall not be considered in controlling future occupational dose of the individual pursuant to 40.15(1) but shall be included in evaluations required by 40.20(1) and 40.20(2).

641—40.21(136C) Occupational dose limits for minors. The annual occupational dose limits for minors are 10 percent of the annual dose limits specified for adult workers in 40.15(136C).

641—40.22(136C) Dose equivalent to an embryo/fetus.

40.22(1) The licensee or registrant shall ensure that the dose equivalent to an embryo/fetus during the entire pregnancy, due to occupational exposure of a declared pregnant woman, does not exceed 0.5 rem (5 mSv). See 40.86(136C) for record-keeping requirements.

40.22(2) The licensee or registrant shall make efforts to avoid substantial variation[1] above a uniform monthly exposure rate to a declared pregnant woman so as to satisfy the limit in 40.22(1).

40.22(3) The dose equivalent to an embryo/fetus shall be taken as the sum of:

a. The deep dose equivalent to the declared pregnant woman; and

b. The dose equivalent to the embryo/fetus from radionuclides in the embryo/fetus and radionuclides in the declared pregnant woman.

40.22(4) If by the time the woman declares pregnancy to the licensee or registrant, the dose equivalent to the embryo/fetus has exceeded 0.5 rem (5 mSv), or is within 0.05 rem (0.5 mSv) of this dose, the licensee or registrant shall be deemed to be in compliance with 40.22(1) if the additional dose equivalent to the embryo/fetus does not exceed 0.05 rem (0.5 mSv) during the remainder of the pregnancy.

[1] The National Council on Radiation Protection and Measurements recommended in NCRP Report No. 91 "Recommendations on Limits for Exposure to Ionizing Radiation" (June 1, 1987) that no more than 0.05 rem (0.5 mSv) to the embryo/fetus be received in any one month.

641—40.23 to **40.25** Reserved.

RADIATION DOSE LIMITS FOR INDIVIDUAL MEMBERS OF THE PUBLIC

641—40.26(136C) Dose limits for individual members of the public.

40.26(1) Each licensee or registrant shall conduct operations so that:

a. The total effective dose equivalent to individual members of the public from the licensed or registered operation does not exceed 0.1 rem (1 millisievert) in a year, exclusive of the dose contributions from background radiation, from any medical administration the individual has received, from exposure to individuals administered radioactive material and released in accordance with 641—subrule 41.2(27), from voluntary participation in medical research programs, and from the licensee's or registrant's disposal of radioactive material into sanitary sewerage under 641—40.72(136C); and

b. The dose in any unrestricted area from external sources, exclusive of the dose contributions from patients administered radioactive material and released under 641—subrule 41.2(27), does not exceed 0.002 rem (0.02 millisievert) in any one hour.

40.26(2) If the licensee or registrant permits members of the public to have access to controlled areas, the limits for members of the public continue to apply to those individuals.

40.26(3) A licensee, registrant, or an applicant for a license or registration may apply for prior agency authorization to operate up to an annual dose limit for an individual member of the public of 0.5 rem (5 mSv). This application shall include the following information:

a. Demonstration of the need for and the expected duration of operations in excess of the limit in 40.26(1); and

b. The licensee's or registrant's program to assess and control dose within the 0.5 rem (5 mSv) annual limit; and

c. The procedures to be followed to maintain the dose ALARA.

40.26(4) In addition to the requirements of this chapter, a licensee or registrant subject to the provisions of the U.S. Environmental Protection Agency's generally applicable environmental radiation standards in 40 CFR 190 shall comply with those standards.

40.26(5) The agency may impose additional restrictions on radiation levels in unrestricted areas and on the total quantity of radionuclides that a licensee or registrant may release in effluents in order to restrict the collective dose.

40.26(6) Notwithstanding the requirements of 40.26(1)*"a,"* a licensee may permit visitors to an individual who cannot be released under 641—subrule 41.2(27) to receive a radiation dose greater than 0.1 rem (1 mSv) if:

a. The radiation dose received does not exceed 0.5 rem (5 mSv); and

b. The authorized user, as defined in 641—subrule 41.2(2), has determined before the visit that it is appropriate.

641—40.27(136C) Compliance with dose limits for individual members of the public.

40.27(1) The licensee or registrant shall make or cause to be made, as appropriate, surveys of radiation levels in unrestricted and controlled areas and radioactive materials in effluents released to unrestricted and controlled areas to demonstrate compliance with the dose limits for individual members of the public in 40.26(136C).

40.27(2) A licensee or registrant shall show compliance with the annual dose limit in 40.26(136C) by:

a. Demonstrating by measurement or calculation that the total effective dose equivalent to the individual likely to receive the highest dose from the licensed or registered operation does not exceed the annual dose limit; or

b. Demonstrating that:

(1) The annual average concentrations of radioactive material released in gaseous and liquid effluents at the boundary of the unrestricted area do not exceed the values specified in Table II of Appendix B; and

(2) If an individual were continually present in an unrestricted area, the dose from external sources would not exceed 0.002 rem (0.02 mSv) in an hour and 0.05 rem (0.5 mSv) in a year.

40.27(3) Upon approval from the agency, the licensee or registrant may adjust the effluent concentration values in Appendix B, Table II, for members of the public, to take into account the actual physical and chemical characteristics of the effluents, such as aerosol size distribution, solubility, density, radioactive decay equilibrium, and chemical form.

RADIOLOGICAL CRITERIA FOR LICENSE TERMINATION

641—40.28(136C) Radiological criteria for license termination.

40.28(1) The criteria in this rule apply to the decommissioning of facilities licensed under 641—Chapter 39, and to the release of part of a facility or site for unrestricted use, as well as other facilities subject to the agency's jurisdiction under Iowa Code chapter 136C.

40.28(2) The criteria in this rule do not apply to sites which:

a. Have been decommissioned prior to July 1, 1999, in accordance with criteria identified in 641—subrule 39.4(33).

b. Have previously submitted and received agency approval on a license termination plan (LTP) or decommissioning plan that is compatible with the United States Nuclear Regulatory Commission (NRC) Site Decommissioning Management Plan (SDMP) Action Plan criteria; or

c. Submit a sufficient LTP or decommissioning plan prior to July 1, 1999, and such LTP or decommissioning plan is approved by the agency prior to July 1, 1999, except that if an environmental impact statement is required in the submittal, there will be a provision for day-to-day extension.

40.28(3) After a site has been decommissioned and the license terminated in accordance with the criteria in this chapter, or after part of a facility or site has been released for unrestricted use in accordance with this chapter, the agency will require additional cleanup only if, based on new information, it determines that the criteria of this chapter were not met and residual radioactivity remaining at the site could result in significant threat to public health and safety.

40.28(4) When calculating TEDE to the average member of the critical group the licensee shall determine the peak annual TEDE dose expected within the first 1000 years after decommissioning.

40.28(5) Public notification and public participation. Upon the receipt of an LTP or decommissioning plan from the licensee or a proposal by the licensee for release of a site pursuant to 40.30(136C) or 40.31(136C) or whenever the agency deems such notice to be in the public interest, the agency shall:

a. Notify and solicit comments from:

(1) Local and state governments in the vicinity of the site and any Indian nation or other indigenous people that have treaty or statutory rights that could be affected by the decommissioning; and

(2) The Environmental Protection Agency for cases where the licensee proposes to release a site pursuant to 40.31(136C).

b. Publish a notice in the Iowa Administrative Bulletin and in a forum, such as local newspapers, letters to state or local organizations, or other appropriate forum, that is readily accessible to individuals in the vicinity of the site, and solicit comments from affected parties.

40.28(6) Minimization of contamination. Applicants for licenses, other than renewals, after July 1, 1999, shall describe in the application how facility design and procedures for operation will minimize, to the extent practicable, contamination of the facility and the environment, facilitate eventual decommissioning, and minimize, to the extent practicable, the generation of radioactive waste. Licensees shall, to the extent practical, conduct operations to minimize the introduction of residual radioactivity into the site, including the subsurface, in accordance with the existing radiation protection requirements in 641—40.10(136C) and radiological criteria for license termination in 40.28(1) through 40.28(5).

[**ARC 1639C**, IAB 10/1/14, effective 11/5/14]

641—40.29(136C) Radiological criteria for unrestricted use. A site will be considered acceptable for unrestricted use if the residual radioactivity that is distinguishable from background radiation results in a TEDE to an average member of the critical group that does not exceed 25 mrem (0.25 mSv) per year, including that from groundwater sources of drinking water, and the residual radioactivity has been reduced to levels that are ALARA. Determination of the levels which are ALARA must take into account consideration of any detriments, such as deaths from transportation accidents, expected to potentially result from decontamination and waste disposal.

641—40.30(136C) Criteria for license termination under restricted conditions. A site will be considered acceptable for license termination under restricted conditions if:

40.30(1) The licensee can demonstrate that reductions in residual radioactivity necessary to comply with the provisions of 40.29(136C) would result in net public or environmental harm or were not being made because the residual levels associated with restricted conditions are ALARA. Determination of the levels which are ALARA must take into account consideration of any detriments, such as traffic accidents, expected to potentially result from decontamination and waste disposal;

40.30(2) The licensee has made provisions for legally enforceable institutional controls that provide reasonable assurance that the TEDE from residual radioactivity distinguishable from background to the average member of the critical group will not exceed 25 mrem (0.25 mSv) per year;

40.30(3) The licensee has provided sufficient financial assurance to enable an independent third party, including a governmental custodian of a site, to assume and carry out responsibilities for any necessary control and maintenance of the site. Acceptable financial assurance mechanisms are:

a. Funds placed into a trust segregated from the licensee's assets and outside the licensee's administrative control and in which the adequacy of the trust funds is to be assessed based on an assumed annual 1 percent real rate of return on investment;

b. Rescinded IAB 10/1/14, effective 11/5/14.

c. A statement of intent in the case of federal, state, or local government licensees, as described in 641—subparagraph 39.4(26)*"f"*(4); or

d. When a governmental entity is assuming custody and ownership of a site, an arrangement that is deemed acceptable by such governmental entity.

40.30(4) The licensee has submitted a decommissioning plan or license termination plan (LTP) to the agency indicating the licensee's intent to decommission in accordance with 641—paragraph 39.4(33)*"d"* and specifying that the licensee intends to decommission by restricting use of the site. The licensee shall document in the LTP or decommissioning plan how the advice of individuals and institutions in the community, who may be affected by the decommissioning, has been sought and incorporated, as appropriate, following analysis of that advice. Licensees proposing to decommission by restricting use of the site shall seek advice from such affected parties regarding the following matters concerning the proposed decommissioning:

a. Whether provisions for institutional controls proposed by the licensee:

(1) Will provide reasonable assurance that the TEDE from residual radioactivity distinguishable from background to the average member of the critical group will not exceed 25 mrem (0.25 mSv) per year;

(2) Will be enforceable; and

(3) Will not impose undue burdens on the local community or other affected parties.

b. Whether the licensee has provided sufficient financial assurance to enable an independent third party, including a governmental custodian of a site, to assume and carry out responsibilities for any necessary control and maintenance of the site;

c. In seeking advice on the issues identified in 40.30(4)*"a,"* the licensee shall provide for:

(1) Participation by representatives of a broad cross section of community interests who may be affected by the decommissioning;

(2) An opportunity for a comprehensive, collective discussion of the issues by the participants represented; and

(3) A publicly available summary of the results of all such discussions, including a description of the individual viewpoints of the participants on the issues and the extent of agreement and disagreement among the participants on the issues; and

40.30(5) Residual radioactivity at the site has been reduced so that if the institutional controls were no longer in effect, there is reasonable assurance that the TEDE from residual radioactivity distinguishable from background to the average member of the critical group is as low as reasonably achievable and would not exceed either:

a. 100 mrem (1 mSv) per year; or

b. 500 mrem (5 mSv) per year provided the licensee:

(1) Demonstrates that further reductions in residual radioactivity necessary to comply with the 100 mrem/yr (1 mSv/yr) value of 40.30(5)*"a"* are not technically achievable, would be prohibitively expensive, or would result in net public or environmental harm;

(2) Makes provisions for durable institutional controls; and

(3) Provides sufficient financial assurance to enable a responsible government entity or independent third party, including a governmental custodian of a site, both to carry out periodic rechecks of the site no less frequently than every five years to ensure that the institutional controls remain in place as necessary to meet the criteria of 40.30(2) and to assume and carry out responsibilities for any necessary controls and maintenance of those controls. Acceptable financial assurance mechanisms are those in subrule 40.30(3).

[**ARC 1639C**, IAB 10/1/14, effective 11/5/14]

641—40.31(136C) Alternate criteria for license termination.

40.31(1) The agency may terminate a license using alternate criteria greater than the dose criterion of 641—40.29(136C), 40.30(2) and 40.30(4)*"a"*(1) if the licensee:

a. Provides assurance that public health and safety would continue to be protected and that it is unlikely that the dose from all man-made sources combined, other than medical, would be more than the 100 mrem/yr (1 mSv/yr) by submitting an analysis of possible sources of exposure;

b. Has employed, to the extent practical, restrictions on site use according to the provisions of 641—40.30(136C) in minimizing exposures at the site;

c. Reduces doses to ALARA levels taking into consideration any detriments such as traffic accidents expected to potentially result from decontamination and waste disposal;

d. Has submitted a decommissioning plan or license termination plan (LTP) to the agency indicating the licensee's intent to decommission in accordance with 641—paragraph 39.4(33)*"d,"* and specifying that the licensee proposes to decommission by use of alternate criteria. The licensee shall document in the decommissioning plan or LTP how the advice of individuals and institutions in the community, who may be affected by the decommissioning, has been sought and addressed, as appropriate, following analysis of that advice. In seeking such advice, the licensee shall provide for:

(1) Participation by representatives of a broad cross section of community interests who may be affected by the decommissioning;

(2) An opportunity for a comprehensive, collective discussion on the issues by the participants represented; and

(3) A publicly available summary of the results of all such discussions, including a description of the individual viewpoints of the participants on the issues and the extent of agreement and disagreement among the participants on the issues; and

e. Has provided sufficient financial assurance in the form of a trust fund to enable an independent third party, including a governmental custodian of a site, to assume and carry out responsibilities for any necessary control and maintenance of the site.

40.31(2) The use of alternate criteria to terminate a license requires the approval of the agency after consideration of the staff's recommendations that will address any comments provided by the Environmental Protection Agency and any public comments submitted pursuant to 40.32(136C).

[**ARC 1639C**, IAB 10/1/14, effective 11/5/14]

TESTING FOR LEAKAGE OR CONTAMINATION OF SEALED SOURCES

641—40.32(136C) Testing for leakage or contamination of sealed sources.

40.32(1) The licensee in possession of any sealed source shall ensure that:

a. Each sealed source, except as specified in 40.32(2), is tested for leakage or contamination and the test results are received before the sealed source is put into use unless the licensee has a certificate from the transferor indicating that the sealed source was tested within six months before transfer to the licensee.

b. Each sealed source that is not designed to emit alpha particles is tested for leakage or contamination at intervals not to exceed six months or at alternative intervals approved by the agency, after evaluation of information specified by 641—subparagraphs 39.4(29)*"l"*(2) and 39.4(29)*"l"*(3) of these rules, an agreement state, a licensing state, or the U.S. Nuclear Regulatory Commission.

c. Each sealed source that is designed to emit alpha particles is tested for leakage or contamination at intervals not to exceed three months or at alternative intervals approved by the agency, after evaluation of information specified by 641—subparagraphs 39.4(29)*"l"*(2) and 39.4(29)*"l"*(3) of these rules, an agreement state, a licensing state, or the Nuclear Regulatory Commission.

d. For each sealed source that is required to be tested for leakage or contamination, at any other time there is reason to suspect that the sealed source might have been damaged or might be leaking, the licensee or registrant shall ensure that the sealed source is tested for leakage or contamination before further use.

e. Tests for leakage for all sealed sources, except brachytherapy sources manufactured to contain radium, shall be capable of detecting the presence of 0.005 μCi (185 Bq) of radioactive material on a test sample. Test samples shall be taken from the sealed source or from the surfaces of the container in which the sealed source is stored or mounted on which one might expect contamination to accumulate. For a sealed source contained in a device, test samples are obtained when the source is in the "off" position.

f. The test for leakage for brachytherapy sources manufactured to contain radium shall be capable of detecting an absolute leakage rate of 0.001 μCi (37 Bq) of radon-222 in a 24-hour period when the

collection efficiency for radon-222 and its daughters has been determined with respect to collection method, volume and time.

g. Tests for contamination from radium daughters shall be taken on the interior surface of brachytherapy source storage containers and shall be capable of detecting the presence of 0.005 μCi (185 Bq) of a radium daughter which has a half-life greater than four days.

40.32(2) A licensee need not perform tests for leakage or contamination on the following sealed sources:

a. Sealed sources containing only radioactive material with a half-life of less than 30 days;

b. Sealed sources containing only radioactive material as a gas;

c. Sealed sources containing 100 μCi (3.7 MBq) or less of beta- or photon-emitting material or 10 μCi (370 kBq) or less of alpha-emitting material;

d. Sealed sources containing only hydrogen-3;

e. Seeds of iridium-192 encased in nylon ribbon; and

f. Sealed sources, except those used in teletherapy and brachytherapy and those containing radium, which are stored, not being used and identified as in storage. The licensee shall, however, test each such sealed source for leakage or contamination and receive the test results before any use or transfer unless it has been tested for leakage or contamination within six months before the date of use or transfer.

40.32(3) Tests for leakage or contamination from sealed sources shall be performed by persons specifically authorized by the agency, an agreement state, a licensing state, or the U.S. Nuclear Regulatory Commission to perform such services.

40.32(4) Test results shall be kept in units of microcurie or becquerel and maintained for inspection by the agency.

40.32(5) The following shall be considered evidence that a sealed source is leaking:

a. The presence of 0.005 μCi (185 Bq) or more of removable contamination on any test sample.

b. Leakage of 0.001 μCi (37 Bq) of radon-222 per 24 hours for brachytherapy sources manufactured to contain radium.

c. The presence of removable contamination resulting from the decay of 0.005 μCi (185 Bq) or more of radium.

40.32(6) The licensee shall immediately withdraw a leaking sealed source from use and shall take action to prevent the spread of contamination. The leaking sealed source shall be repaired or disposed of in accordance with this chapter.

40.32(7) Reports of test results for leaking or contaminated sealed sources shall be made pursuant to 40.102(136C).

[**ARC 1639C**, IAB 10/1/14, effective 11/5/14]

641—40.33 to **40.35** Reserved.

SURVEYS AND MONITORING

641—40.36(136C) Surveys and monitoring—general.

40.36(1) Each licensee or registrant shall make, or cause to be made, surveys of areas, including the subsurface, that:

a. Are necessary for the licensee or registrant to comply with this chapter; and

b. Are necessary under the circumstances to evaluate:

(1) The magnitude and extent of radiation levels; and

(2) Concentrations or quantities of residual radioactivity; and

(3) The potential radiological hazards of the radiation levels and residual radioactivity detected.

40.36(2) Notwithstanding 641—40.82(136C), records from surveys describing the location and amount of subsurface residual radioactivity identified at the site must be kept with records important for decommissioning, and such records must be retained in accordance with 641—subrule 39.4(26) as applicable.

40.36(3) The licensee or registrant shall ensure that instruments and equipment used for quantitative radiation measurements, for example, dose rate and effluent monitoring, are calibrated at intervals not to exceed 12 months for the radiation measured except when a more frequent interval is specified in another applicable part of these rules or a license condition.

40.36(4) All personnel dosimeters, except for direct and indirect reading pocket ionization chambers and those dosimeters used to measure the dose to any extremity, that require processing to determine the radiation dose and that are used by licensees and registrants to comply with 40.15(136C), with other applicable provisions of these rules, or with conditions specified in a license or registration shall be processed and evaluated by a dosimetry processor:

a. Holding current personnel dosimetry accreditation from the National Voluntary Laboratory Accreditation Program (NVLAP) of the National Institute of Standards and Technology; and

b. Approved in this accreditation process for the type of radiation or radiations included in the NVLAP program that most closely approximates the type of radiation or radiations for which the individual wearing the dosimeter is monitored.

40.36(5) The licensee or registrant shall ensure that adequate precautions are taken to prevent a deceptive exposure of an individual monitoring device.

40.36(6) After replacement, each personnel dosimeter must be sent for processing as soon as possible.

[**ARC 1639C**, IAB 10/1/14, effective 11/5/14]

641—40.37(136C) Conditions requiring individual monitoring of external and internal occupational dose. Each licensee or registrant shall monitor exposures from sources of radiation at levels sufficient to demonstrate compliance with the occupational dose limits of this chapter. As a minimum:

40.37(1) Each licensee or registrant shall monitor occupational exposure to radiation and shall supply and require the use of individual monitoring devices by:

a. Adults likely to receive, in 1 year from sources external to the body, a dose in excess of 10 percent of the limits in 40.15(1);

b. Minors likely to receive, in 1 year from sources external to the body, a deep dose equivalent in excess of 0.1 rem (1 mSv), a lens dose equivalent in excess of 0.15 rem (1.5 mSv), or a shallow dose equivalent to the skin or to the extremities in excess of 0.5 rem (5 mSv);

c. Individuals entering a high or very high radiation area;

d. Individuals working with medical fluoroscopic equipment; and

e. Declared pregnant women likely to receive during the entire pregnancy, from radiation sources external to the body, a deep dose equivalent in excess of 0.1 rem (1 mSv).

40.37(2) Each licensee or registrant shall monitor, to determine compliance with 40.18(136C), the occupational intake of radioactive material by and assess the committed effective dose equivalent to:

a. Adults likely to receive, in 1 year, an intake in excess of 10 percent of the applicable ALI in Table I, Columns 1 and 2, of Appendix B;

b. Minors likely to receive, in 1 year, a committed effective dose equivalent in excess of 0.1 rem (1 mSv); and

c. Declared pregnant women likely to receive, during the entire pregnancy, a committed effective dose equivalent in excess of 0.1 rem (1 mSv).

40.37(3) Location of individual monitoring devices. Each licensee or registrant shall ensure that individuals who are required to monitor occupational doses in accordance with 40.37(136C) wear individual monitoring devices as follows:

a. An individual monitoring device used for monitoring the dose to the whole body shall be worn at the unshielded portion of the whole body likely to receive the highest exposure. When a protective apron is worn, the location of the individual monitoring device shall be near the midline of the body, under the apron;

b. An individual monitoring device used for monitoring the dose to an embryo/fetus of a declared pregnant woman shall be located at the waist under any protective apron being worn by the woman;

c. An individual monitoring device used for monitoring the eye dose equivalent, to demonstrate compliance with 40.15(136C) shall be located at the neck (collar), outside any protective apron being worn by the monitored individual, or at an unshielded location closer to the eye;

d. An individual monitoring device used for monitoring the dose to the extremities, to demonstrate compliance with 40.15(136C), shall be worn on the extremity likely to receive the highest exposure. Each individual monitoring device shall be oriented to measure the highest dose to the extremity being monitored.

[**ARC 1639C**, IAB 10/1/14, effective 11/5/14]

641—40.38 to **40.41** Reserved.

CONTROL OF EXPOSURE FROM EXTERNAL SOURCES IN RESTRICTED AREAS

641—40.42(136C) Control of access to high radiation areas.

40.42(1) The licensee or registrant shall ensure that each entrance or access point to a high radiation area has one or more of the following features:

a. A control device that, upon entry into the area, causes the level of radiation to be reduced below that level at which an individual might receive a deep dose equivalent of 0.1 rem (1 mSv) in 1 hour at 30 centimeters from the source of radiation from any surface that the radiation penetrates; or

b. A control device that energizes a conspicuous visible or audible alarm signal so that the individual entering the high radiation area and the supervisor of the activity are made aware of the entry; or

c. Entryways that are locked, except during periods when access to the areas is required, with positive control over each individual entry.

40.42(2) In place of the controls required by 40.42(1) for a high radiation area, the licensee or registrant may substitute continuous direct or electronic surveillance that is capable of preventing unauthorized entry.

40.42(3) The licensee or registrant may apply to the agency for approval of alternative methods for controlling access to high radiation areas.

40.42(4) The licensee or registrant shall establish the controls required by 40.42(1) and 40.42(3) in a way that does not prevent individuals from leaving a high radiation area.

40.42(5) The licensee is not required to control each entrance or access point to a room or other area that is a high radiation area solely because of the presence of radioactive materials prepared for transport and packaged and labeled in accordance with the rules of the U.S. Department of Transportation provided that:

a. The packages do not remain in the area longer than three days; and

b. The dose rate at 1 meter from the external surface of any package does not exceed 0.01 rem (0.1 mSv) per hour.

40.42(6) The licensee is not required to control entrance or access to rooms or other areas in hospitals solely because of the presence of patients containing radioactive material, provided that there are personnel in attendance who are taking the necessary precautions to prevent the exposure of individuals to radiation or radioactive material in excess of the established limits in this chapter and to operate within the ALARA provisions of the licensee's radiation protection program.

40.42(7) The licensee or registrant is not required to control entrance or access to rooms or other areas containing sources of radiation capable of producing a high radiation area as described in 641—40.42(136C) if the registrant has met all the specific requirements for access and control specified in other applicable chapters such as 641—Chapter 45 for industrial radiography, 641—Chapter 41 for X-rays in the healing arts, and 641—Chapter 41 for particle accelerators.

641—40.43(136C) Control of access to very high radiation areas.

40.43(1) In addition to the requirements in 40.42(136C), the licensee or registrant shall institute measures to ensure that an individual is not able to gain unauthorized or inadvertent access to areas in which radiation levels could be encountered at 500 rad (5 Gy) or more in 1 hour at 1 meter from a source

of radiation or any surface through which the radiation penetrates. This requirement does not apply to rooms or areas in which diagnostic X-ray systems are the only source of radiation, or to non-self-shielded irradiators.

40.43(2) The registrant is not required to control entrance or access to rooms or other areas containing sources of radiation capable of producing a very high radiation area as described in 40.43(1) if the registrant has met all the specific requirements for access and control specified in other applicable chapters such as 641—Chapter 45 for industrial radiography, 641—Chapter 41 for X-rays in the healing arts, and 641—Chapter 41 for particle accelerators.

641—40.44(136C) Control of access to very high radiation areas—irradiators.

40.44(1) This rule applies to licensees with sources of radiation in non-self-shielded irradiators. This rule does not apply to sources of radiation that are used in teletherapy, in industrial radiography, or in completely self-shielded irradiators in which the source of radiation is both stored and operated within the same shielding radiation barrier and, in the designed configuration of the irradiator, is always physically inaccessible to any individual and cannot create high levels of radiation in an area that is accessible to any individual.

40.44(2) Each area in which there may exist radiation levels in excess of 500 rad (5 Gy) in 1 hour at 1 meter from a source of radiation that is used to irradiate materials shall meet the following requirements:

a. Each entrance or access point shall be equipped with entry control devices which:

(1) Function automatically to prevent any individual from inadvertently entering a very high radiation area; and

(2) Permit deliberate entry into the area only after a control device is actuated that causes the radiation level within the area, from the source of radiation, to be reduced below that at which it would be possible for an individual to receive a deep dose equivalent in excess of 0.1 rem (1 mSv) in 1 hour; and

(3) Prevent operation of the source of radiation if it would produce radiation levels in the area that could result in a deep dose equivalent to an individual in excess of 0.1 rem (1 mSv) in 1 hour.

b. Additional control devices shall be provided so that, upon failure of the entry control devices to function as required by 40.44(2)*"a"*:

(1) The radiation level within the area, from the source of radiation, is reduced below that at which it would be possible for an individual to receive a deep dose equivalent in excess of 0.1 rem (1 mSv) in 1 hour; and

(2) Conspicuous visible and audible alarm signals are generated to make an individual attempting to enter the area aware of the hazard and at least one other authorized individual, who is physically present, familiar with the activity, and prepared to render or summon assistance, aware of the failure of the entry control devices.

c. The licensee shall provide control devices so that, upon failure or removal of physical radiation barriers other than the sealed source's shielded storage container:

(1) The radiation level from the source of radiation is reduced below that at which it would be possible for an individual to receive a deep dose equivalent in excess of 0.1 rem (1 mSv) in 1 hour; and

(2) Conspicuous visible and audible alarm signals are generated to make potentially affected individuals aware of the hazard and the licensee or at least one other individual, who is familiar with the activity and prepared to render or summon assistance, aware of the failure or removal of the physical barrier.

d. When the shield for stored sealed sources is a liquid, the licensee shall provide means to monitor the integrity of the shield and to signal, automatically, loss of adequate shielding.

e. Physical radiation barriers that comprise permanent structural components, such as walls, that have no credible probability of failure or removal in ordinary circumstances need not meet the requirements of 40.44(2)*"c"* and 40.44(2)*"d."*

f. Each area shall be equipped with devices that will automatically generate conspicuous visible and audible alarm signals to alert personnel in the area before the source of radiation can be put into

operation and in time for any individual in the area to operate a clearly identified control device, which must be installed in the area and which can prevent the source of radiation from being put into operation.

g. Each area shall be controlled by use of such administrative procedures and such devices as are necessary to ensure that the area is cleared of personnel prior to each use of the source of radiation.

h. Each area shall be checked by a radiation measurement to ensure that, prior to the first individual's entry into the area after any use of the source of radiation, the radiation level from the source of radiation in the area is below that at which it would be possible for an individual to receive a deep dose equivalent in excess of 0.1 rem (1 mSv) in 1 hour.

i. The entry control devices required in 40.44(2)*"a"* shall be tested for proper functioning. See 40.89(136C) for record-keeping requirements.

(1) Testing shall be conducted prior to initial operation with the source of radiation on any day, unless operations were continued uninterrupted from the previous day; and

(2) Testing shall be conducted prior to resumption of operation of the source of radiation after any unintentional interruption; and

(3) The licensee or registrant shall submit and adhere to a schedule for periodic tests of the entry control and warning systems.

j. The licensee or registrant shall not conduct operations, other than those necessary to place the source of radiation in safe condition or to effect repairs on controls, unless control devices are functioning properly.

k. Entry and exit portals that are used in transporting materials to and from the irradiation area, and that are not intended for use by individuals, shall be controlled by such devices and administrative procedures as are necessary to physically protect and warn against inadvertent entry by any individual through these portals. Exit portals for irradiated materials shall be equipped to detect and signal the presence of any loose radioactive material that is carried toward such an exit and to automatically prevent loose radioactive material from being carried out of the area.

40.44(3) Licensees, registrants, or applicants for licenses or registrations for sources of radiation within the purview of 40.44(2) which will be used in a variety of positions or in locations, such as open fields or forests, that make it impracticable to comply with certain requirements of 40.44(2), such as those for the automatic control of radiation levels, may apply to the agency for approval of alternative safety measures. Alternative safety measures shall provide personnel protection at least equivalent to those specified in 40.44(2). At least one of the alternative measures shall include an entry-preventing interlock control based on a measurement of the radiation that ensures the absence of high radiation levels before an individual can gain access to the area where such sources of radiation are used.

40.44(4) The entry control devices required by 40.44(2) and 40.44(3) shall be established in such a way that no individual will be prevented from leaving the area.

641—40.45 to **40.47** Reserved.

RESPIRATORY PROTECTION AND CONTROLS TO RESTRICT
INTERNAL EXPOSURE IN RESTRICTED AREAS

641—40.48(136C) Use of process or other engineering controls. The licensee shall use, to the extent practical, process or other engineering controls, such as containment, decontamination, or ventilation, to control the concentrations of radioactive material in air.

641—40.49(136C) Use of other controls.

40.49(1) When it is not practical to apply process or other engineering controls to control the concentrations of radioactive material in air to values below those that define an airborne radioactivity area, the licensee shall, consistent with maintaining the total effective dose equivalent ALARA, increase monitoring and limit intakes by one or more of the following means:

a. Control of access;

b. Limitation of exposure times;

c. Use of respiratory protection equipment; or

d. Other controls.

40.49(2) If the licensee performs an ALARA analysis to determine whether or not respirators should be used, the licensee may consider safety factors other than radiological factors. The licensee should also consider the impact of respirator use on workers' industrial health and safety.

641—40.50(136C) Use of individual respiratory protection equipment.

40.50(1) If the licensee assigns or permits the use of respiratory protection equipment to limit intakes pursuant to 40.49(136C):

a. The licensee shall use only respiratory protection equipment that is tested and certified by the National Institute for Occupational Safety and Health (NIOSH), except as otherwise noted in this subrule.

b. If the licensee wishes to use equipment that has not been tested or certified by the National Institute for Occupational Safety and Health or for which there is no schedule for testing or certification, the licensee shall submit an application for authorized use of that equipment, including a demonstration by testing, or a demonstration on the basis of reliable test information, that the material and performance characteristics of the equipment are capable of providing the proposed degree of protection under anticipated conditions of use.

c. The licensee or registrant shall implement and maintain a respiratory protection program that includes:

(1) Air sampling sufficient to identify the potential hazard, permit proper equipment selection, and estimate doses;

(2) Surveys and bioassays, as appropriate, to evaluate actual intakes;

(3) Testing of respirators for operability (user seal check for face sealing devices and functional check for others) immediately prior to each use;

(4) Written procedures regarding monitoring, including air sampling and bioassays; supervision and training of respirator user; fit testing; respirator selection; breathing air quality; inventory and control; storage, issuance, maintenance, repair, testing, and quality assurance of respiratory protection equipment; record keeping; and limitations on periods of respirator use and relief from respirator use;

(5) Determination by a physician that the individual user is medically fit to use respiratory protection equipment: before the initial fitting of a face-sealing respirator; before the first field use of non-face-sealing respirators; and either every 12 months thereafter, or periodically at a frequency determined by a physician; and

(6) Fit testing, with a fit factor equal to or greater than 10 times the APF for negative pressure devices, and a fit factor equal to or greater than 500 for any positive pressure, continuous flow, and pressure-demand devices, before the first field use of tight-fitting, face-sealing respirators and periodically thereafter at a frequency not to exceed one year. Fit testing must be performed with the facepiece operating in the negative pressure mode.

d. The licensee shall advise each respirator user that the user may leave the area at any time for relief from respirator use in the event of equipment malfunction, physical or psychological distress, procedural or communication failure, significant deterioration of operating conditions, or any other conditions that might require such relief.

e. The licensee shall also consider limitations appropriate to the type and mode of use. When selecting respiratory devices, the licensee shall provide for vision correction, adequate communication, low temperature work environments, and the concurrent use of other safety or radiological protection equipment. The licensee shall use equipment in such a way as not to interfere with the proper operation of the respirator.

f. Standby rescue persons are required whenever one-piece atmosphere-supplying suits or any combination of supplied air respiratory protection devices and personnel protection equipment is used from which an unaided individual would have difficulty extricating himself or herself. The standby rescue persons must be equipped with respiratory protection devices or other apparatus appropriate for the potential hazards. The standby rescue persons shall observe or otherwise maintain continuous communication (visual, voice, signal line, telephone, radio, or other suitable means) with the workers, and be immediately available to assist the workers in case of a failure of the air supply or for any

other reason that requires relief from distress. A sufficient number of standby rescue persons must be immediately available to assist all users of this type of equipment and to provide effective emergency rescue if needed.

g. Atmosphere-supplying respirators must be supplied with respirable air of grade D quality or better as defined by the Compressed Gas Association in publication G-7.1, "Commodity Specification for Air," 1997, and included in the regulations of the Occupational Safety and Health Administration (29 CFR 1910.134(i)(1)(ii)(A) through (E)). Grade D quality air criteria include:

(1) Oxygen content (v/v) of 19.5 to 23.5 percent;

(2) Hydrocarbon (condensed) content of 5 milligrams per cubic meter of air or less;

(3) Carbon monoxide (CO) content of 10 ppm or less;

(4) Carbon dioxide content of 1000 ppm or less; and

(5) Lack of noticeable odor.

h. The licensee shall ensure that no objects, materials or substances, such as facial hair, or any conditions that interfere with the face, facepiece seal or valve function, and that are under the control of the respirator wearer, are present between the skin of the wearer's face and the sealing surface of a tight-fitting respirator facepiece.

i. In the estimation of the dose to individuals from intake of airborne radioactive materials, the concentration of radioactive material in the air that is inhaled when respirators are worn is initially assumed to be the ambient concentration in air without respiratory protection, divided by the assigned protection factor. If the dose is later found to be greater than the estimated dose, the corrected value must be used. If the dose is later found to be less than the estimated dose, the corrected value may be used.

40.50(2) When estimating exposure of individuals to airborne radioactive materials, the licensee may make allowance for respiratory protection equipment used to limit intakes pursuant to 40.49(136C), provided that the following conditions, in addition to those in 40.50(1), are satisfied:

a. The licensee selects respiratory protection equipment that provides a protection factor, specified in Appendix A, greater than the multiple by which peak concentrations of airborne radioactive materials in the working area are expected to exceed the values specified in Appendix B, Table I, Column 3. However, if the selection of respiratory protection equipment with a protection factor greater than the multiple defined in the preceding sentence is inconsistent with the goal specified in 40.49(136C) of keeping the total effective dose equivalent ALARA, the licensee or registrant may select respiratory protection equipment with a lower protection factor provided that such a selection would result in a total effective dose equivalent that is ALARA. The concentration of radioactive material in the air that is inhaled when respirators are worn may be initially estimated by dividing the average concentration in air, during each period of uninterrupted use, by the protection factor. If the exposure is later found to be greater than initially estimated, the corrected value shall be used; if the exposure is later found to be less than initially estimated, the corrected value may be used.

b. The licensee shall obtain authorization from the agency before assigning respiratory protection factors in excess of those specified in Appendix A. The agency may authorize a licensee to use higher protection factors on receipt of an application that:

(1) Describes the situation for which a need exists for higher protection factors, and

(2) Demonstrates that the respiratory protection equipment provides these higher protection factors under the proposed conditions of use.

40.50(3) In an emergency, the licensee shall use as emergency equipment only respiratory protection equipment that has been specifically certified or had certification extended for emergency use by the National Institute for Occupational Safety and Health and the Mine Safety and Health Administration.

40.50(4) Further restrictions.

a. The licensee shall notify the agency in writing at least 30 days before the date that respiratory protection equipment is first used pursuant to either 40.50(1) or 40.50(2).

b. The agency may impose restrictions in addition to those listed in these rules in order to:

(1) Ensure that the respiratory protection program of the licensee is adequate to limit doses to individuals from intakes of airborne radioactive materials consistent with maintaining total effective dose equivalent ALARA; and

(2) Limit the extent to which a licensee may use respiratory protection equipment instead of process or other engineering controls.

641—40.51 to **40.53** Reserved.

STORAGE AND CONTROL OF LICENSED OR REGISTERED SOURCES OF RADIATION

641—40.54(136C) Security and control of licensed radioactive material in quantities of concern. Rescinded **ARC 1479C**, IAB 6/11/14, effective 7/16/14.

641—40.55(136C) Security and control of licensed or registered sources of radiation.

1. The licensee or registrant shall secure licensed or registered radioactive material that is stored in controlled or unrestricted areas from unauthorized removal or access.
2. The licensee or registrant shall maintain constant surveillance and use devices or administrative procedures to prevent unauthorized use of licensed or registered radioactive material that is in an unrestricted area and that is not in storage.
3. The registrant shall secure registered radiation machines from unauthorized removal.
4. The registrant shall use devices or administrative procedures to prevent unauthorized use of registered radiation machines.
5. Security requirements for portable gauges. Each portable gauge licensee shall use a minimum of two independent physical controls that form tangible barriers to secure portable gauges from unauthorized removal, whenever portable gauges are not under the control and constant surveillance of the licensee.

641—40.56(136C) Control of sources of radiation not in storage. Rescinded IAB 4/8/98, effective 7/1/98.

641—40.57 to **40.59** Reserved.

PRECAUTIONARY PROCEDURES

641—40.60(136C) Caution signs.

40.60(1) *Standard radiation symbol.* Unless otherwise authorized by the agency, the symbol prescribed by this rule shall use the colors magenta, or purple, or black on yellow background. The symbol prescribed is the three-bladed design as follows:

RADIATION SYMBOL

1. Cross-hatched area is to be magenta, or purple, or black, and
2. The background is to be yellow.

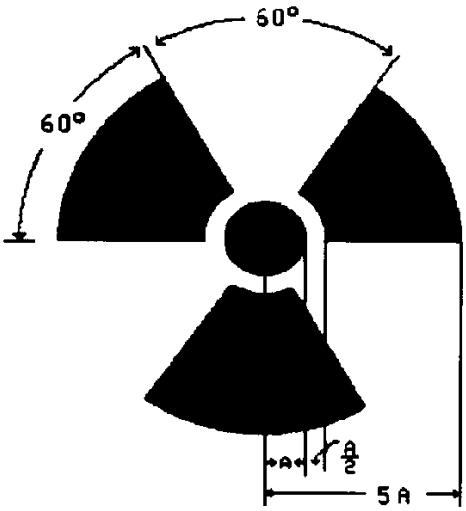

40.60(2) *Exception to color requirements for standard radiation symbol.* Notwithstanding the requirements of 40.60(1), licensees are authorized to label sources, source holders, or device components containing sources of radiation that are subjected to high temperatures, with conspicuously etched or stamped radiation caution symbols and without a color requirement.

40.60(3) *Additional information on signs and labels.* In addition to the contents of signs and labels prescribed in this chapter, the licensee or registrant shall provide, on or near the required signs and labels, additional information, as appropriate, to make individuals aware of potential radiation exposures and to minimize the exposures.

40.60(4) *Improper posting or labeling.* The licensee or registrant shall ensure that adequate measures are taken to prevent improper posting or labeling.

641—40.61(136C) Posting requirements.

40.61(1) *Posting of radiation areas.* The licensee or registrant shall post each radiation area with a conspicuous sign or signs bearing the radiation symbol and the words "CAUTION, RADIATION AREA".

40.61(2) *Posting of high radiation areas.* The licensee or registrant shall post each high radiation area with a conspicuous sign or signs bearing the radiation symbol and the words "CAUTION, HIGH RADIATION AREA" or "DANGER, HIGH RADIATION AREA".

40.61(3) *Posting of very high radiation areas.* The licensee or registrant shall post each very high radiation area with a conspicuous sign or signs bearing the radiation symbol and words "GRAVE DANGER, VERY HIGH RADIATION AREA".

40.61(4) *Posting of airborne radioactivity areas.* The licensee shall post each airborne radioactivity area with a conspicuous sign or signs bearing the radiation symbol and the words "CAUTION, AIRBORNE RADIOACTIVITY AREA" or "DANGER, AIRBORNE RADIOACTIVITY AREA".

40.61(5) *Posting of areas or rooms in which licensed or registered material is used or stored.* The licensee shall post each area or room in which there is used or stored an amount of licensed material exceeding ten times the quantity of such material specified in Appendix C with a conspicuous sign or signs bearing the radiation symbol and the words "CAUTION, RADIOACTIVE MATERIAL(S)" or "DANGER, RADIOACTIVE MATERIAL(S)".

641—40.62(136C) Exceptions to posting requirements.

40.62(1) A licensee or registrant is not required to post caution signs in areas or rooms containing sources of radiation for periods of less than eight hours, if each of the following conditions is met:

a. The sources of radiation are constantly attended during these periods by an individual who takes the precautions necessary to prevent the exposure of individuals to sources of radiation in excess of the limits established in this chapter; and

b. The area or room is subject to the licensee's or registrant's control.

40.62(2) Rooms or other areas in hospitals that are occupied by patients are not required to be posted with caution signs pursuant to 40.61(136C) provided that the patient could be released from licensee control pursuant to 641—subrule 41.2(27).

40.62(3) A room or area is not required to be posted with a caution sign because of the presence of a sealed source provided the radiation level at 30 centimeters from the surface of the sealed source container or housing does not exceed 0.005 rem (0.05 mSv) per hour.

40.62(4) A room or area is not required to be posted with a caution sign because of the presence of radiation machines used solely for diagnosis or simulation in the healing arts.

40.62(5) Rooms in hospitals or clinics that are used for teletherapy are exempt from the requirement to post caution signs under 641—40.61(136C) if:

a. Access to the room is controlled pursuant to 641—subrule 41.2(53); and

b. Personnel in attendance take necessary precautions to prevent an inadvertent exposure of workers, other patients, and members of the public to radiation in excess of the limits established in this chapter.

641—40.63(136C) Labeling containers and radiation machines.

40.63(1) The licensee shall ensure that each container of licensed material bears a durable, clearly visible label bearing the radiation symbol and the words "CAUTION, RADIOACTIVE MATERIAL" or "DANGER, RADIOACTIVE MATERIAL". The label shall also provide information, such as the radionuclides present, an estimate of the quantity of radioactivity, the date for which the activity is estimated, radiation levels, kinds of materials, and mass enrichment, to permit individuals handling or using the containers, or working in the vicinity of the containers, to take precautions to avoid or minimize exposures.

40.63(2) Each licensee shall, prior to removal or disposal of empty uncontaminated containers to unrestricted areas, remove or deface the radioactive material label or otherwise clearly indicate that the container no longer contains radioactive materials.

40.63(3) Each registrant shall ensure that each radiation machine is labeled in a conspicuous manner which cautions individuals that radiation is produced when it is energized.

641—40.64(136C) Exemptions to labeling requirements. A licensee is not required to label:

40.64(1) Containers holding licensed materials in quantities less than the quantities listed in Appendix C; or

40.64(2) Containers holding licensed material in concentrations less than those specified in Table III of Appendix B; or

40.64(3) Containers attended by an individual who takes the precautions necessary to prevent the exposure of individuals in excess of the limits established by this chapter; or

40.64(4) Containers when they are in transport and packaged and labeled in accordance with the rules of the U.S. Department of Transportation;[1] or

40.64(5) Containers that are accessible only to individuals authorized to handle or use them, or to work in the vicinity of the containers, if the contents are identified to these individuals by a readily available written record. Examples of containers of this type are containers in locations such as water-filled canals, storage vaults, or hot cells. The record shall be retained as long as the containers are in use for the purpose indicated on the record; or

40.64(6) Installed manufacturing or process equipment, such as piping and tanks.

[1] Labeling of packages containing radioactive materials is required by the U.S. Department of Transportation if the amount and type of radioactive material exceeds the limits for an excepted quantity or article as defined and limited by U.S. Department of Transportation regulations 49 CFR 173.403(m) and (w) and 173.421-424.

641—40.65(136C) Procedures for receiving and opening packages.

40.65(1) Each licensee who expects to receive a package containing quantities of radioactive material in excess of a Type A quantity shall make arrangements to receive:

a. The package when the carrier offers it for delivery; or

b. The notification of the arrival of the package at the carrier's terminal and to take possession of the package expeditiously.

40.65(2) Each licensee shall:

a. Monitor the external surfaces of a labeled[1] package for radioactive contamination unless the package contains only radioactive material in the form of gas or in special form as defined in 641—Chapter 38;

b. Monitor the external surfaces of a labeled[1] package for radiation levels unless the package contains quantities of radioactive material that are less than or equal to the Type A quantity; and

c. Monitor all packages known to contain radioactive material for radioactive contamination and radiation levels if there is evidence of degradation of package integrity, such as packages that are crushed, wet, or damaged.

40.65(3) The licensee shall perform the monitoring required by 40.65(2) as soon as practicable after receipt of the package, but not later than three hours after the package is received at the licensee's facility if it is received during the licensee's normal working hours, or not later than three hours from the beginning of the next working day if it is received after working hours.

40.65(4) The licensee shall immediately notify the final delivery carrier and, by telephone and telegram, mailgram, or facsimile, the agency when:

a. Removable radioactive surface contamination exceeds the limits of 49 CFR 173.443; or

b. External radiation levels exceed the limits of 10 CFR 71.47 as set forth in rule 641—39.5(136C).

40.65(5) Each licensee shall:

a. Establish, maintain, and retain written procedures for safely opening packages in which radioactive material is received; and

b. Ensure that the procedures are followed and that due consideration is given to special instructions for the type of package being opened.

40.65(6) Licensees transferring special form sources in vehicles owned or operated by the licensee or registrant to and from a work site are exempt from the contamination monitoring requirements of 40.65(2), but are not exempt from the monitoring requirement in 40.65(2), for measuring radiation levels that ensure that the source is still properly lodged in its shield.

[1] Labeled with a Radioactive e White I, Yellow II, or Yellow III label as specified in U.S. Department of Transportation regulations 49 CFR 172.403 and 172.436-440.

641—40.66 to **40.69** Reserved.

WASTE DISPOSAL

641—40.70(136C) General requirements.

40.70(1) A licensee shall dispose of licensed material only:

a. By transfer to an authorized recipient as provided in 40.74(136C) or 641—39.4(136C), or to the U.S. Department of Energy; or

b. By decay in storage; or

c. By release in effluents within the limits in 40.72(1)*"d"*; or

d. As authorized pursuant to 641—40.71(136C), 641—40.72(136C), 641—40.73(136C), 641—40.74(136C), or 641—40.77(136C).

40.70(2) A person shall be specifically licensed to receive waste containing licensed material from other persons for:

a. Treatment prior to disposal; or

b. Treatment or disposal by incineration; or

c. Decay in storage; or

d. Storage until transferred to a storage or disposal facility authorized to receive the waste.

[**ARC 8982B**, IAB 8/11/10, effective 9/15/10]

641—40.71(136C) Method for obtaining approval of proposed disposal procedures. A licensee or applicant for a license may apply to the agency for approval of proposed procedures, not otherwise authorized in these rules, to dispose of licensed material generated in the licensee's operations. Each application shall include:

40.71(1) A description of the waste containing licensed material to be disposed of, including the physical and chemical properties that have an impact on risk evaluation, and the proposed manner and conditions of waste disposal; and

40.71(2) An analysis and evaluation of pertinent information on the nature of the environment; and

40.71(3) The nature and location of other potentially affected facilities; and

40.71(4) Analyses and procedures to ensure that doses are maintained ALARA and within the dose limits in this chapter.

641—40.72(136C) Disposal by release into sanitary sewerage.

40.72(1) A licensee may discharge licensed material into sanitary sewerage if each of the following conditions is satisfied:

a. The material is readily soluble, or is readily dispersible biological material, in water; and

b. The quantity of licensed radioactive material that the licensee releases into the sewer in one month divided by the average monthly volume of water released into the sewer by the licensee does not exceed the concentration listed in Table III of Appendix B; and

c. If more than one radionuclide is released, the following conditions must also be satisfied:

(1) The licensee shall determine the fraction of the limit in Table III of Appendix B represented by discharges into sanitary sewerage by dividing the actual monthly average concentration of each radionuclide released by the licensee into the sewer by the concentration of that radionuclide listed in Table III of Appendix B; and

(2) The sum of the fractions for each radionuclide required by 40.72(1)*"c"*(1) does not exceed unity; and

d. The total quantity of licensed radioactive material that the licensee releases into the sanitary sewerage in a year does not exceed 5 Ci (185 GBq) of hydrogen-3, 1 Ci (37 GBq) of carbon-14, and 1 Ci (37 GBq) of all other radioactive materials combined.

40.72(2) Excreta from individuals undergoing medical diagnosis or therapy with radioactive material are not subject to the limitations contained in 40.72(1).

641—40.73(136C) Treatment or disposal by incineration. A licensee may treat or dispose of licensed materials by incineration only in the amounts and forms specified in 40.74(136C) or as specifically approved by the agency pursuant to 40.71(136C).

641—40.74(136C) Disposal of specific wastes.

40.74(1) A licensee may dispose of the following licensed material as if it were not radioactive:

a. 0.05 μCi(1.85 kBq), or less, of hydrogen-3 or carbon-14 per gram of medium used for liquid scintillation counting; and

b. 0.05 μCi (1.85 kBq), or less, of hydrogen-3 or carbon-14 per gram of animal tissue, averaged over the weight of the entire animal.

40.74(2) A licensee shall not dispose of tissue pursuant to 40.74(1)*"b"* in a manner that would permit its use either as food for humans or as animal feed.

40.74(3) The licensee shall maintain records in accordance with 40.88(136C).

641—40.75(136C) Transfer for disposal and manifests.

40.75(1) Any licensee shipping radioactive waste intended for ultimate disposal at a licensed land disposal facility must document the information required on the Uniform Low-Level Radioactive Waste Manifest and transfer this recorded manifest information to the intended consignee in accordance with Appendix D of this chapter.

40.75(2) Each shipment manifest must include a certification by the waste generator as specified in Section II of Appendix D of this chapter.

40.75(3) Each person involved in the transfer for disposal and disposal of waste, including the waste generator, waste collector, waste processor, and disposal facility operator, shall comply with the requirements specified in Section III of Appendix D of this chapter.

40.75(4) Any licensee shipping licensed material, as defined in paragraphs "3" and "4" of the definition of "by-product material" set forth in 641—Chapter 38, intended for ultimate disposal at a land disposal facility licensed under 10 CFR Part 61 must document the information required on the Uniform Low-Level Radioactive Waste Manifest and transfer this recorded manifest information to the intended consignee in accordance with Appendix D of this chapter.
[**ARC 8982B**, IAB 8/11/10, effective 9/15/10]

641—40.76(136C) Compliance with environmental and health protection regulations. Nothing in 40.70(136C), 40.71(136C), 40.72(136C), 40.73(136C), 40.74(136C), or 40.75(136C) relieves the licensee or registrant from complying with other applicable federal, state and local regulations governing any other toxic or hazardous properties of materials that may be disposed of to 40.70(136C), 40.71(136C), 40.72(136C), 40.73(136C), 40.74(136C), or 40.75(136C).

641—40.77(136C) Disposal of certain by-product material.

40.77(1) Licensed material, as defined in paragraphs "3" and "4" of the definition of "by-product material" set forth in 641—Chapter 38, may be disposed of in accordance with 10 CFR Part 61, even though the material is not defined as low-level radioactive waste. Therefore, any licensed by-product material being disposed of at a facility, or transferred for ultimate disposal at a facility licensed under 10 CFR Part 61, must meet the requirements of 641—40.75(136C).

40.77(2) A licensee may dispose of licensed material, as defined in paragraphs "3" and "4" of the definition of "by-product material" set forth in 641—Chapter 38, at a disposal facility authorized to dispose of such material in accordance with any federal or state solid or hazardous waste law, including the Solid Waste Disposal Act, as authorized under the Energy Policy Act of 2005.
[**ARC 8982B**, IAB 8/11/10, effective 9/15/10]

641—40.78 and **40.79** Reserved.

RECORDS

641—40.80(136C) General provisions.

40.80(1) Each licensee or registrant shall use the special units curie, rad, rem and roentgen, counts per minute (cpm), disintegrations per minute (dpm), or the SI units becquerel, gray, sievert and coulomb per kilogram, including multiples and subdivisions, and shall clearly indicate the units of all quantities on records required by this chapter.

40.80(2) The licensee or registrant shall make a clear distinction among the quantities entered on the records required by this chapter, such as, total effective dose equivalent, total organ dose equivalent, shallow dose equivalent, lens dose equivalent, deep dose equivalent, or committed effective dose equivalent.

40.80(3) In the records required by this chapter, the licensee may record quantities in SI units in parentheses following each of the units specified in 40.80(1). However, all quantities must be recorded as stated in 40.80(1).

40.80(4) Notwithstanding the requirements of 40.80(1), when recording information on shipment manifests, as required in 641—40.75(136C), information must be recorded in the International System of Units (SI) or in SI and units as specified in 40.80(1).

40.80(5) Notwithstanding the requirements of 40.80(1), records of removable radioactive surface contamination on packages shall be recorded in disintegrations per minute (dpm).

641—40.81(136C) Records of radiation protection programs.

40.81(1) Each licensee or registrant shall maintain records of the radiation protection program, including:

a. The provisions of the program; and

b. Audits and other reviews of program content and implementation.

40.81(2) The licensee or registrant shall retain the records required by 40.81(1)*"a"* until the agency terminates each pertinent license or registration requiring the record. The licensee or registrant shall retain the records required by 40.81(1)*"b"* for three years after the record is made.

641—40.82(136C) Records of surveys.

40.82(1) Each licensee or registrant shall maintain records showing the results of surveys and calibrations required by 40.36(136C) and 40.65(2). The licensee or registrant shall retain these records for three years after the record is made.

40.82(2) The licensee or registrant shall retain each of the following records until the agency terminates each pertinent license or registration requiring the record:

a. Records of the results of surveys to determine the dose from external sources of radiation used, in the absence of or in combination with individual monitoring data, in the assessment of individual dose equivalents; and

b. Records of the results of measurements and calculations used to determine individual intakes of radioactive material and used in the assessment of internal dose; and

c. Records showing the results of air sampling, surveys, and bioassays required pursuant to 40.50(1)*"c"*(1) and 40.50(1)*"c"*(2); and

d. Records of the results of measurements and calculations used to evaluate the release of radioactive effluents to the environment.

40.82(3) Upon termination of the license or registration, the licensee or registrant shall permanently store records required in 641—40.82(136C) or shall make provisions with the agency for transfer to the agency.

641—40.83(136C) Records of tests for leakage or contamination of sealed sources. Records of tests for leakage or contamination of sealed sources required by 40.32(136C) shall be kept in units of microcurie or becquerel and maintained for inspection by the agency for five years after the records are made.

641—40.84(136C) Records of prior occupational dose.

40.84(1) The licensee or registrant shall retain the records of prior occupational dose and exposure history as specified in 40.19(136C) until the agency terminates each pertinent license or registration requiring this record. The licensee or registrant shall retain records used in preparing the record required in 40.84(136C) for three years after the record is made.

40.84(2) Upon termination of the license or registration, the licensee or registrant shall permanently store records required in 40.84(136C) or shall make provisions with the agency for transfer to the agency.

641—40.85(136C) Records of planned special exposures.

40.85(1) For each use of the provisions of 40.20(136C) for planned special exposures, the licensee or registrant shall maintain records that describe:

a. The exceptional circumstances requiring the use of a planned special exposure; and

b. The name of the management official who authorized the planned special exposure and a copy of the signed authorization; and

c. What actions were necessary; and

d. Why the actions were necessary; and

e. What precautions were taken to assure that doses were maintained ALARA; and

f. What individual and collective doses were expected to result; and

g. The doses actually received in the planned special exposure.

40.85(2) The licensee or registrant shall retain the records until the agency terminates each pertinent license or registration requiring these records.

40.85(3) Upon termination of the license or registration, the licensee or registrant shall permanently store records required in 40.85(136C) or shall make provisions with the agency for transfer to the agency.

641—40.86(136C) Records of individual monitoring results.

40.86(1) *Record-keeping requirement.* Each licensee or registrant shall maintain records of doses received by all individuals for whom monitoring was required pursuant to 40.37(136C), and records of doses received during planned special exposures, accidents, and emergency conditions. Assessments of dose equivalent and records made using units in effect on or before January 1, 1994, need not be changed. These records shall include, when applicable:

a. The deep dose equivalent to the whole body, eye dose equivalent, shallow dose equivalent to the skin, and shallow dose equivalent to the extremities; and

b. The estimated intake of radionuclides, see 40.16(136C); and

c. The committed effective dose equivalent assigned to the intake of radionuclides; and

d. The specific information used to calculate the committed effective dose equivalent pursuant to 40.18(3); and

e. The total effective dose equivalent when required by 40.16(136C); and

f. The total of the deep dose equivalent and the committed dose to the organ receiving the highest total dose.

40.86(2) *Record-keeping frequency.* The licensee or registrant shall make entries of the records specified in 40.86(1) at intervals not to exceed one year.

40.86(3) *Record-keeping format.* The licensee or registrant shall maintain the records specified in 40.86(1) in clear and legible form.

40.86(4) *Embryo/Fetus records.* The licensee or registrant shall maintain the records of dose to an embryo/fetus with the records of dose to the declared pregnant woman. The declaration of pregnancy, including the estimated date of conception, shall also be kept on file, but may be maintained separately from the dose records.

40.86(5) *Retention during license or registration.* The licensee or registrant shall retain each required form or record until the agency terminates each pertinent license or registration requiring the record.

40.86(6) *Retention after termination.* Upon termination of the license or registration, the licensee or registrant shall permanently store records required in 40.86(136C) or shall make provision with the agency for transfer to the agency.

641—40.87(136C) Records of dose to individual members of the public.

40.87(1) Each licensee or registrant shall maintain records sufficient to demonstrate compliance with the dose limit for individual members of the public. See 40.26(136C).

40.87(2) The licensee or registrant shall retain the records required by this rule until the agency terminates each pertinent license or registration requiring the record.

641—40.88(136C) Records of waste disposal.

40.88(1) Each licensee shall maintain records of the disposal of licensed materials made pursuant to 40.71(136C), 40.72(136C), 40.73(136C), 40.74(136C), and disposal or burial in soil.

40.88(2) The licensee shall retain the records required by 40.88(1) until the agency terminates each pertinent license or registration requiring the record.

641—40.89(136C) Records of testing entry control devices for very high radiation areas.

40.89(1) Each licensee or registrant shall maintain records of tests made pursuant to 40.44(2)*"j"* on entry control devices for very high radiation areas. These records must include the date, time, and results of each such test of function.

40.89(2) The licensee or registrant shall retain the records required by 40.89(1) for three years after the record is made.

641—40.90(136C) Form of records.

40.90(1) Each record required by Chapter 40 shall be legible throughout the specified retention period. The record shall be the original or a reproduced copy or a microform provided that the copy or microform is authenticated by authorized personnel and that the microform is capable of producing a clear copy throughout the required retention period, or the record may also be stored in electronic media with the capability for producing legible, accurate, and complete records during the required retention period. Records, such as letters, drawings, and specifications, shall include all pertinent information, such as stamps, initials, and signatures. The licensee or registrant shall maintain adequate safeguards against tampering with and loss of records.

40.90(2) The licensee or registrant shall retain the records required by Chapter 40 until the agency terminates each pertinent license or registration requiring the record.

641—40.91 to **40.94** Reserved.

REPORTS

641—40.95(136C) Reports of stolen, lost, or missing licensed or registered sources of radiation.

40.95(1) Telephone reports. Each licensee or registrant shall report to the agency by telephone as follows:

a. Immediately after its occurrence becomes known to the licensee, stolen, lost, or missing licensed radioactive material in an aggregate quantity equal to or greater than 1,000 times the quantity specified in Appendix C under such circumstances that it appears to the licensee that an exposure could result to individuals in unrestricted areas; or

b. Within 30 days after its occurrence becomes known to the licensee, lost, stolen, or missing licensed radioactive material in quantity greater than ten times the quantity specified in Appendix C that is still missing.

c. Immediately after its occurrence becomes known to the registrant, a stolen, lost, or missing radiation machine.

d. Rescinded IAB 3/30/05, effective 5/4/05.

40.95(2) Written reports. Each licensee or registrant required to make a report pursuant to 40.95(1) shall, within 30 days after making the telephone report, make a written report to the agency setting forth the following information:

a. A description of the licensed or registered source of radiation involved, including, for radioactive material, the kind, quantity, and chemical and physical form; and, for radiation machines, the manufacturer, model and serial number, type and maximum energy of radiation emitted; and

b. A description of the circumstances under which the loss or theft occurred; and

c. A statement of disposition, or probable disposition, of the licensed or registered source of radiation involved; and

d. Exposures of individuals to radiation, circumstances under which the exposures occurred, and the possible total effective dose equivalent to persons in unrestricted areas; and

e. Actions that have been taken, or will be taken, to recover the source of radiation; and

f. Procedures or measures that have been, or will be, adopted to ensure against a recurrence of the loss or theft of licensed or registered sources of radiation.

40.95(3) Subsequent to filing the written report, the licensee or registrant shall also report additional substantive information on the loss or theft within 30 days after the licensee or registrant learns of such information.

40.95(4) The licensee or registrant shall prepare any report filed with the agency pursuant to 40.95(136C) so that names of individuals who may have received exposure to radiation are stated in a separate and detachable portion of the report.

641—40.96(136C) Notification of incidents.

40.96(1) Immediate notification. Notwithstanding other requirements for notification, each licensee or registrant shall immediately report each event involving a source of radiation possessed by the licensee or registrant that may have caused or threatens to cause any of the following conditions:

a. An individual to receive:

(1) A total effective dose equivalent of 25 rem (0.25 Sv) or more; or

(2) A lens dose equivalent of 75 rem (0.75 Sv) or more; or

(3) A shallow dose equivalent to the skin or extremities of 250 rad (2.5 Gy) or more; or

b. The release of radioactive material, inside or outside of a restricted area, so that, had an individual been present for 24 hours, the individual could have received an intake five times the annual limit on intake. This provision does not apply to locations where personnel are not normally stationed during routine operations, such as hot-cells or process enclosures.

c. In addition to the requirements of paragraphs *"a"* and *"b"* above, each licensee shall notify the Iowa department of public health as soon as possible but not later than four hours after the discovery of an event that prevents immediate protective actions necessary to avoid exposures to radiation or radioactive materials that could exceed regulatory limits or releases of licensed material that could exceed regulatory limits (events may include fires, explosions, toxic gas releases, and other such events).

40.96(2) Twenty-four-hour notification. Each licensee or registrant shall, within 24 hours of discovery of the event, report to the agency each event involving loss of control of a licensed or registered source of radiation possessed by the licensee or registrant that may have caused, or threatens to cause, any of the following conditions:

a. An individual to receive, in a period of 24 hours:

(1) A total effective dose equivalent exceeding 5 rem (0.05 Sv); or

(2) A lens dose equivalent exceeding 15 rem (0.15 Sv); or

(3) A shallow dose equivalent to the skin or extremities exceeding 50 rem (0.5 Sv); or

b. The release of radioactive material, inside or outside of a restricted area, so that, had an individual been present for 24 hours, the individual could have received an intake in excess of one occupational ALI. This provision does not apply to locations where personnel are not normally stationed during routine operations, such as hot-cells or process enclosures.

c. In addition to the requirements of paragraphs *"a"* and *"b"* above, each licensee shall notify the Iowa department of public health within 24 hours after the discovery of any of the following events involving licensed material:

(1) An unplanned contamination event that:

1. Requires access to the contaminated area, by workers or the public, to be restricted for more than 24 hours by imposing additional radiological controls or by prohibiting entry into the area;

2. Involves a quantity of material greater than five times the lowest annual limit on intake specified in Appendix B for the material; and

3. Has access to the area restricted for a reason other than to allow isotopes with a half-life of less than 24 hours to decay prior to decontamination.

(2) An event in which equipment is disabled or fails to function as designed when:

1. The equipment is required by regulation or license condition to prevent releases exceeding regulatory limits, to prevent exposures to radiation and radioactive materials exceeding regulatory limits, or to mitigate the consequences of an accident;

2. The equipment is required to be available and operable when it is disabled or fails to function; and

3. No redundant equipment is available and operable to perform the required safety function.

(3) An event that requires unplanned medical treatment at a medical facility of an individual with spreadable radioactive contamination on the individual's clothing or body.

(4) An unplanned fire or explosion damaging any licensed material or any device, container, or equipment containing licensed material when:

1. The quantity of material involved is greater than five times the lowest annual limit on intake specified in Appendix B for the material; and

2. The damage affects the integrity of the licensed material or its container.

40.96(3) The licensee or registrant shall prepare each report filed with the agency pursuant to 40.96(136C) so that names of individuals who have received exposure to sources of radiation are stated in a separate and detachable portion of the report.

40.96(4) Licensees or registrants shall make the reports required by 40.96(1) and 40.96(2) to the agency by telephone, telegram, mailgram, or facsimile.

a. Licensees or registrants making initial reports to the Iowa department of public health shall to the extent that the information is available at the time of notification include:

(1) The caller's name and call-back telephone number;

(2) A description of the event, including date and time;

(3) The exact location of the event;

(4) The isotopes, quantities, and chemical and physical form of the licensed material involved; and

(5) Any personnel radiation exposure data available.

b. Each licensee or registrant who makes a report required by 40.96(1) or 40.96(2) shall submit a written follow-up report within 30 days of the initial report. Written reports prepared pursuant to other rules may be submitted to fulfill this requirement if the reports contain all of the necessary information. These written reports must be sent to the Iowa Department of Public Health, Bureau of Radiological Health, Lucas State Office Building, Des Moines, Iowa 50319. The reports must include the following:

(1) A description of the event, including the probable cause and the manufacturer and model number (if applicable) of any equipment that failed or malfunctioned;

(2) The exact location of the event;

(3) The isotopes, quantities, and chemical and physical form of the licensed material involved;

(4) Date and time of the event;

(5) Corrective actions taken or planned and the results of any evaluations or assessments; and

(6) The extent of exposure of individuals to radiation or to radioactive materials without identification of individuals by name.

40.96(5) The provisions of 641—40.96(136C) do not apply to doses that result from planned special exposures, provided such doses are within the limits for planned special exposures and are reported pursuant to 641—40.98(136C).

641—40.97(136C) Reports of exposures, radiation levels, and concentrations of radioactive material exceeding the constraints or limits.

40.97(1) Reportable events. In addition to the notification required by 40.96(136C), each licensee or registrant shall submit a written report within 30 days after learning of any of the following occurrences:

a. Incidents for which notification is required by 40.96(136C); or

b. Doses in excess of any of the following:

(1) The occupational dose limits for adults in 40.15(136C); or

(2) The occupational dose limits for a minor in 40.21(136C); or

(3) The limits for an individual member of the public in 40.26(136C); or

(4) Any applicable limit in the license or registration; or

(5) The ALARA constraints for air emissions established under 641—40.10(136C); or

(6) The limits for an embryo/fetus of a declared pregnant woman in 40.22(136C).

c. Levels of radiation or concentrations of radioactive material in:

(1) A restricted area in excess of applicable limits in the license or registration; or

(2) An unrestricted area in excess of ten times the applicable limit set forth in this chapter or in the license or registration, whether or not involving exposure of any individual in excess of the limits in 40.26(136C); or

d. For licensees subject to the provisions of U.S. Environmental Protection Agency's generally applicable environmental radiation standards in 40 CFR 190, levels of radiation or releases of radioactive material in excess of those standards, or of license conditions related to those standards.

40.97(2) Contents of reports.

a. Each report required by 40.97(1) shall describe the extent of exposure of individuals to radiation and radioactive material, including, as appropriate:

(1) Estimates of each individual's dose; and

(2) The levels of radiation and concentrations of radioactive material involved; and

(3) The cause of the elevated exposures, dose rates, or concentrations; and

(4) Corrective steps taken or planned to ensure against a recurrence, including the schedule for achieving conformance with applicable limits, ALARA constraints, generally applicable environmental standards, and associated license conditions. Each report filed pursuant to this paragraph must include the name, social security number, and date of birth for each occupationally overexposed individual. The report must be prepared so that this information is stated in a separate and detachable part of the report.

b. Each report filed pursuant to 40.97(1) shall include for each individual exposed: the name, social security account number, and date of birth. With respect to the limit for the embryo/fetus in 40.22(136C), the identifiers should be those of the declared pregnant woman. The report shall be prepared so that this information is stated in a separate and detachable portion of the report.

40.97(3) All licensees or registrants who make reports pursuant to 641—40.97(136C) or 641—40.98(136C) to the agency regarding exposure of an identified occupationally exposed individual, or of an identified member of the public, to radiation or radioactive material shall also provide a copy of the report to the individual or member of the public. Transmittal shall be at the same time as the transmittal to the agency.

[**ARC 8982B**, IAB 8/11/10, effective 9/15/10]

641—40.98(136C) Reports of planned special exposures. The licensee or registrant shall submit a written report to the agency within 30 days following any planned special exposure conducted in accordance with 40.20(136C) informing the agency that a planned special exposure was conducted and indicating the date the planned special exposure occurred and the information required by 40.85(136C).

641—40.99(136C) Reports of transactions involving nationally tracked sources. Each licensee who manufactures, transfers, receives, disassembles, or disposes of a nationally tracked source shall complete and submit a National Source Tracking Transaction Report as specified in subrules 40.99(1) to 40.99(5) for each type of transaction.

40.99(1) Each licensee that manufactures a nationally tracked source shall complete and submit a National Source Tracking Transaction Report. The report must include the following information:

a. The name, address, and license number of the reporting licensee;

b. The name of the individual preparing the report;

c. The manufacturer, model, and serial number of the source;

d. The radioactive material in the source;

e. The initial source strength in becquerels (curies) at the time of manufacture; and

f. The manufacture date of the source.

40.99(2) Each licensee that transfers a nationally tracked source to another person shall complete and submit a National Source Tracking Transaction Report. The report must include the following information:

a. The name, address, and license number of the reporting licensee;

b. The name of the individual preparing the report;

c. The name and license number of the recipient facility and the shipping address;

d. The manufacturer, model, and serial number of the source or, if not available, other information to uniquely identify the source;

e. The radioactive material in the source;

f. The initial or current source strength in becquerels (curies);

g. The date for which the source strength is reported;

h. The shipping date;

i. The estimated arrival date; and

j. For nationally tracked sources transferred as waste under a Uniform Low-Level Radioactive Waste Manifest, the waste manifest number and the container identification with the nationally tracked source.

40.99(3) Each licensee that receives a nationally tracked source shall complete and submit a National Source Tracking Transaction Report. The report must include the following information:

a. The name, address, and license number of the reporting licensee;

b. The name of the individual preparing the report;

c. The name, address, and license number of the person that provided the source;

d. The manufacturer, model, and serial number of the source or, if not available, other information to uniquely identify the source;

e. The radioactive material in the source;

f. The initial or current source strength in becquerels (curies);

g. The date for which the source strength is reported;

h. The date of receipt; and

i. For material received under a Uniform Low-Level Radioactive Waste Manifest, the waste manifest number and the container identification with the nationally tracked source.

40.99(4) Each licensee that disassembles a nationally tracked source shall complete and submit a National Source Tracking Transaction Report. The report must include the following information:

a. The name, address, and license number of the reporting licensee;

b. The name of the individual preparing the report;

c. The manufacturer, model, and serial number of the source or, if not available, other information to uniquely identify the source;

d. The radioactive material in the source;

e. The initial or current source strength in becquerels (curies);

f. The date for which the source strength is reported; and

g. The disassemble date of the source.

40.99(5) Each licensee that disposes of a nationally tracked source shall complete and submit a National Source Tracking Transaction Report. The report must include the following information:

a. The name, address, and license number of the reporting licensee;

b. The name of the individual preparing the report;

c. The waste manifest number;

d. The container identification with the nationally tracked source;

e. The date of disposal; and

f. The method of disposal.

40.99(6) Reports discussed in subrules 40.99(1) to 40.99(5) must be submitted by the close of the next business day after the transaction. A single report may be submitted for multiple sources and transactions. The reports must be submitted to the National Source Tracking System by using:

a. The on-line National Source Tracking System;

b. Electronically using a computer-readable format;

c. By facsimile;

d. By mail to the address on the National Source Tracking Transaction Report Form (NRC Form 748); or

e. By telephone with follow-up by facsimile or mail.

40.99(7) Each licensee shall correct any error in previously filed reports or file a new report for any missed transaction within five business days of the discovery of the error or missed transaction. Such errors may be detected by a variety of methods such as administrative reviews or by physical inventories required by regulation. In addition, each licensee shall reconcile the inventory of nationally tracked sources possessed by the licensee against that licensee's data in the National Source Tracking System. The reconciliation must be conducted during the month of January in each year. The reconciliation process must include resolving any discrepancies between the National Source Tracking System and the actual inventory by filing the reports identified by subrules 40.99(1) to 40.99(5). By January 31 of each

year, each licensee must submit to the National Source Tracking System confirmation that the data in the National Source Tracking System is correct.

40.99(8) Each licensee that possesses Category 1 nationally tracked sources shall report its initial inventory of Category 1 nationally tracked sources to the National Source Tracking System by January 31, 2009. Each licensee that possesses Category 2 nationally tracked sources shall report its initial inventory of Category 2 nationally tracked sources to the National Source Tracking System by January 31, 2009. The information may be submitted by using any of the methods identified in subrule 40.99(6). The initial inventory report must include the following information:

a. The name, address, and license number of the reporting licensee;

b. The name of the individual preparing the report;

c. The manufacturer, model, and serial number of each nationally tracked source or, if not available, other information to uniquely identify the source;

d. The radioactive material in the sealed source;

e. The initial or current source strength in becquerels (curies); and

f. The date for which the source strength is reported.

641—40.100(136C) Reports of individual monitoring.

40.100(1) This section applies to each person licensed or registered by the agency to:

a. Possess or use sources of radiation for purposes of industrial radiography pursuant to 641—39.4(136C) and 641—Chapter 45; or

b. Receive radioactive waste from other persons for disposal pursuant to 10 CFR Part 61 of federal regulations or appropriate other agreement state regulations; or

c. Possess or use at any time, for processing or manufacturing for distribution pursuant to 641—39.4(136C) or 641—41.2(136C), radioactive material in quantities exceeding any one of the following quantities:

Radionuclide	Activity[a]	
	Ci	GBq
Cesium-137	1	37
Cobalt-60	1	37
Gold-198	100	3,700
Iodine-131	1	37
Iridium-192	10	370
Krypton-85	1,000	37,000
Promethium-147	10	370
Technetium-99m	1,000	37,000

[a] The agency may require as a license condition, or by rule, regulation, or order pursuant to 40.105(136C), reports from licensees or registrants who are licensed or registered to use radionuclides not on this list, in quantities sufficient to cause comparable radiation levels.

40.100(2) Each licensee or registrant in a category listed in 40.100(1) shall submit an annual report of the results of individual monitoring carried out by the licensee or registrant for each individual for whom monitoring was required by 40.36(136C) during that year. The licensee or registrant may include additional data for individuals for whom monitoring was provided but not required.

40.100(3) The licensee or registrant shall file the report required by 40.100(2), covering the preceding year, on or before April 30 of each year. The licensee or registrant shall submit the report to the agency.

641—40.101(136C) Notifications and reports to individuals.

40.101(1) Requirements for notification and reports to individuals of exposure to radiation or radioactive material are specified in 641—40.112(136C).

40.101(2) When a licensee or registrant is required pursuant to 40.97(136C), 40.98(136C), or 40.100(136C) to report to the agency any exposure of an identified occupationally exposed individual,

or an identified member of the public, to radiation or radioactive material, the licensee or registrant shall also provide a copy of the report submitted to this agency to the individual. Such notice shall be transmitted at a time not later than the transmittal to the agency, and shall comply with the provisions of 40.112(1).

641—40.102(136C) Reports of leaking or contaminated sealed sources. The licensee shall file a report within five days with the agency if the test for leakage or contamination required pursuant to 40.32(136C) indicates a sealed source is leaking or contaminated. The report shall include the equipment involved, the test results and the corrective action taken.

641—40.103 and **40.104** Reserved.

ADDITIONAL REQUIREMENTS

641—40.105(136C) Vacating premises. Each specific licensee shall, no less than 30 days before vacating or relinquishing possession or control of premises which may have been contaminated with radioactive material as a result of their activities, notify the agency in writing of intent to vacate. When deemed necessary by the agency, the licensee shall decontaminate the premises in such a manner as the agency may specify.

641—40.106 to **40.109** Reserved.

NOTICES, INSTRUCTIONS, AND REPORTS TO WORKERS; INSPECTIONS

641—40.110(136C) Posting of notices to workers.

40.110(1) Each licensee or registrant, except those registrants with diagnostic X-ray systems, shall post current copies of the following documents:

a. This subrule and 641—Chapter 40;

b. The license, certificate of registration, conditions or documents incorporated into the license by reference and amendments thereto;

c. The operating procedures applicable to activities under the license or registration; and

d. Any notice of violation involving radiological working conditions, proposed imposition of civil penalty, or order issued pursuant to 641—Chapter 38, and any response from the licensee or registrant.

40.110(2) If posting of a document specified in 40.110(1)*"a,"*40.110(1)*"b"* and 40.110(1)*"c"* is not practical, the licensee or registrant may post a notice which describes the document and states where it may be examined.

40.110(3) Agency Form "Notice to Employees" shall be posted by each licensee or registrant.

40.110(4) Agency documents posted pursuant to 40.110(1)*"d"* shall be posted within two working days after receipt of the documents from the agency; the licensee's or registrant's response, if any, shall be posted within two working days after dispatch from the licensee or registrant. Such documents shall remain posted for a minimum of five working days or until action correcting the violation has been completed, whichever is later.

40.110(5) Documents, notices, or forms posted pursuant to 40.110(1) shall appear in a sufficient number of places to permit individuals engaged in work under the license or registration to observe them on the way to or from any particular work location to which the document applies, shall be conspicuous, and shall be replaced if defaced or altered.

641—40.111(136C) Instructions to workers.

40.111(1) All individuals who in the course of employment are likely to receive in a year an occupational dose in excess of 100 mrem (1 mSv):

a. Shall be kept informed of the storage, transfer, or use of sources of radiation;

b. Shall be instructed in the health protection problems associated with exposure to radiation or radioactive material to the individual and potential offspring, in precautions or procedures to minimize exposure, and in the purposes and functions of protective devices employed;

c. Shall be instructed in, and required to observe, to the extent within the worker's control, the applicable provisions of these rules and licenses for the protection of personnel from exposures to radiation or radioactive material occurring in such areas;

d. Shall be instructed of their responsibility to report promptly to the licensee or registrant any condition which may constitute, lead to, or cause a violation of the Act, these rules, and licenses or unnecessary exposure to radiation or radioactive material;

e. Shall be instructed in the appropriate response to warnings made in the event of any unusual occurrence or malfunction that may involve exposure to radiation or radioactive material; and

f. Shall be advised as to the radiation exposure reports which workers shall be furnished pursuant to 641—40.112(136C).

g. The instruction in *"b"* through *"f"* above shall be conducted at least annually.

h. Shall be commensurate with potential radiological health protection problems present in the workplace.

40.111(2) In determining those individuals subject to the requirements of 40.111(1), consideration must be given to assigning activities during normal and abnormal situations involving exposure to sources of radiation which can reasonably be expected to occur during the life of the facility. The extent of these instructions must be commensurate with potential radiological health protection problems present in the workplace.

641—40.112(136C) Notifications and reports to individuals.

40.112(1) Radiation exposure data for an individual and the results of any measurements, analyses, and calculations of radioactive material deposited or retained in the body of an individual shall be reported to the individual as specified in subrule 40.112(2). The information reported shall include data and results obtained pursuant to these rules, orders, or license conditions, as shown in records maintained by the licensee or registrant pursuant to 40.86(136C). Each notification and report shall:

a. Be in writing;

b. Include appropriate identifying data such as the name of the licensee or registrant, the name of the individual, and the individual's identification number, preferably social security number;

c. Include the individual's exposure information; and

d. Contain the following statement:

"This report is furnished to you under the provisions of 40.112(136C) of Iowa's Radiation Machine and Radioactive Materials rules. You should preserve this report for further reference."

40.112(2) Each licensee or registrant shall make dose information available to workers as shown in records maintained by the licensee or registrant under the provisions of 641—40.86(136C). The licensee or registrant shall provide to each individual monitored under 641—40.37(136C) an annual report of the dose received in that monitoring year if:

a. The individual's occupational dose exceeds 100 mrem (1 mSv) TEDE or 100 mrem (1 mSv) to any individual organ or tissue, or

b. The individual requests the individual's annual dose report.

40.112(3) Each licensee or registrant shall furnish a report of the worker's exposure to sources of radiation at the request of a worker formerly engaged in activities controlled by the licensee or registrant. The report shall include the dose record for each year the worker was required to be monitored pursuant to 40.37(136C). Such report shall be furnished within 30 days from the date of the request, or within 30 days after the dose of the individual has been determined by the licensee or registrant, whichever is later. The report shall cover the period of time that the worker's activities involved exposure to sources of radiation and shall include the dates and locations of work under the license or registration in which the worker participated during this period.

40.112(4) When a licensee or registrant is required pursuant to 641—40.96(136C), 641—40.97(136C), or 641—40.98(136C) to report to the agency any exposure of an individual to

radiation or radioactive material, the licensee or the registrant shall also provide the individual a report on the individual's exposure data included in the report to the agency. Such reports shall be transmitted at a time not later than the transmittal to the agency.

40.112(5) At the request of a worker who is terminating employment with the licensee or registrant in work involving exposure to radiation or radioactive material, during the current year, each licensee or registrant shall provide at termination to each such worker, or to the worker's designee, a written report regarding the radiation dose received by that worker from operations of the licensee or registrant during the current year or fraction thereof. If the most recent individual monitoring results are not available at that time, a written estimate of the dose shall be provided together with a clear indication that this is an estimate.

[**ARC 8982B**, IAB 8/11/10, effective 9/15/10]

641—40.113(136C) Presence of representatives of licensees or registrants and workers during inspection.

40.113(1) Each licensee or registrant shall afford to the agency at all reasonable times opportunity to inspect materials, machines, activities, facilities, premises, and records pursuant to these rules.

40.113(2) During an inspection, agency inspectors may consult privately with workers as specified in 40.114(136C). The licensee or registrant may accompany agency inspectors during other phases of an inspection.

40.113(3) If, at the time of inspection, an individual has been authorized by the workers to represent them during agency inspections, the licensee or registrant shall notify the inspectors of such authorization and shall give the workers' representative an opportunity to accompany the inspectors during the inspection of physical working conditions.

40.113(4) Each worker's representative shall be routinely engaged in work under control of the licensee or registrant and shall have received instructions as specified in 40.111(136C).

40.113(5) Different representatives of licensees or registrants and workers may accompany the inspectors during different phases of an inspection if there is no resulting interference with the conduct of the inspection. However, only one worker's representative at a time may accompany the inspectors.

40.113(6) With the approval of the licensee or registrant and the workers' representative, an individual who is not routinely engaged in work under control of the licensee or registrant, for example, a consultant to the licensee or registrant or to the workers' representative, shall be afforded the opportunity to accompany agency inspectors during the inspection of physical working conditions.

40.113(7) Notwithstanding the other provisions of 40.113(136C), agency inspectors are authorized to refuse to permit accompaniment by any individual who deliberately interferes with a fair and orderly inspection. With regard to areas containing information classified by an agency of the U.S. Government in the interest of national security, an individual who accompanies an inspector may have access to such information only if authorized to do so. With regard to any area containing proprietary information, the workers' representative for that area shall be an individual previously authorized by the licensee or registrant to enter that area.

641—40.114(136C) Consultation with workers during inspections.

40.114(1) Agency inspectors may consult privately with workers concerning matters of occupational radiation protection and other matters related to applicable provisions of these rules and licenses to the extent the inspectors deem necessary for the conduct of an effective and thorough inspection.

40.114(2) During the course of an inspection, any worker may bring privately to the attention of the inspectors, either orally or in writing, any past or present condition which the worker has reason to believe may have contributed to or caused any violation of the Act, these rules, or license condition, or any unnecessary exposure of an individual to sources of radiation under the licensee's or registrant's control. Any such notice in writing shall comply with the requirements of 40.115(1).

40.114(3) The provisions of 40.114(2) shall not be interpreted as authorization to disregard instructions pursuant to 40.111(136C).

641—40.115(136C) Requests by workers for inspections.

40.115(1) Any worker or representative of workers believing that a violation of the Act, these rules, or license conditions exists or has occurred in work under a license or registration with regard to radiological working conditions in which the worker is engaged may request an inspection by giving notice of the alleged violation to the Bureau of Radiological Health, Iowa Department of Public Health, Lucas State Office Building, Des Moines, Iowa 50319-0075. Any such notice shall be in writing, shall set forth the specific grounds for the notice, and shall be signed by the worker or representative of the workers. A copy shall be provided to the licensee or registrant by the Bureau of Radiological Health, no later than at the time of inspection except that, upon the request of the worker giving such notice, such worker's name and the name of individuals referred to therein shall not appear in such copy or on any record published, released, or made available by the agency, except for good cause shown.

40.115(2) If, upon receipt of such notice, the Bureau of Radiological Health determines that the complaint meets the requirements set forth in 40.116(1), and that there are reasonable grounds to believe that the alleged violation exists or has occurred, an inspection shall be made as soon as practicable to determine if such alleged violation exists or has occurred. Inspections pursuant to 40.116(136C) need not be limited to matters referred to in the complaint.

40.115(3) No licensee, registrant, or contractor or subcontractor of a licensee or registrant shall discharge or in any manner discriminate against any worker because such worker has filed any complaint or instituted or caused to be instituted any proceeding under these rules or has testified or is about to testify in any such proceeding or because of the exercise by such worker on behalf of such worker or others of any option afforded by this chapter.

641—40.116(136C) Inspections not warranted—informal review.

40.116(1) *a.* If the Bureau of Radiological Health determines, with respect to a complaint under this rule, that an inspection is not warranted because there are no reasonable grounds to believe that a violation exists or has occurred, the Bureau of Radiological Health shall notify the complainant in writing of such determination. The complainant may obtain review of such determination by submitting a written statement of position with the Attorney General's Office. Such agency will provide the licensee or registrant with a copy of such statement by certified mail, excluding, at the request of the complainant, the name of the complainant. The licensee or registrant may submit an opposing written statement of position with the Attorney General's Office. Such agency will provide the complainant with a copy of such statement by certified mail.

b. Upon the request of the complainant, the Attorney General's Office may hold an informal conference in which the complainant and the licensee or registrant may orally present their views. An informal conference may also be held at the request of the licensee or registrant, but disclosure of the identity of the complainant will be made only following receipt of written authorization from the complainant. After considering all written and oral views presented, the Attorney General's Office shall affirm, modify, or reverse the determination of the Radiation Control Program and furnish the complainant and the licensee or registrant a written notification of the decision and the reason therefor.

40.116(2) If the Bureau of Radiological Health determines that an inspection is not warranted because the requirements of 40.116(1) have not been met, the complainant shall be notified in writing of such determination. Such determination shall be without prejudice to the filing of a new complaint meeting the requirements of 40.116(1).

641—40.117(136C) Employee protection.

40.117(1) Discrimination by a licensee or registrant, an applicant for a license or registration, or a contractor or subcontractor of a licensee or applicant against an employee for engaging in certain protected activities is prohibited. Discrimination includes discharge and other actions that relate to compensation, terms, conditions, or privileges of employment. The protected activities are established in 641—Chapters 38 to 45 and in general are related to the administration or enforcement of requirements imposed under 641—Chapters 38 to 45.

a. The protected activities include but are not limited to:

(1) Providing the agency or the individual's employer information about alleged violations of either of the statutes named in this rule or possible violations of requirements imposed under either of those statutes;

(2) Refusing to engage in any practice made unlawful under either of the statutes named in this rule or under these requirements if the employee has identified the alleged illegality to the employer;

(3) Requesting that the agency institute action against the individual's employer for the administration or enforcement of these requirements;

(4) Testifying in any agency proceeding, or before Congress, or at any federal or state proceeding regarding any provision (or proposed provision) of federal statutes or these rules;

(5) Assisting or participating in, or about to assist or participate in, these activities.

b. These activities are protected even if no formal proceeding is actually initiated as a result of the employee's assistance or participation.

c. This rule has no application to any employee alleging discrimination prohibited by this rule who, acting without direction from the individual's employer (or the employer's agent), deliberately causes a violation of any requirement of 641—Chapters 38 to 45.

40.117(2) Any employee who believes that the employee has been discharged or otherwise discriminated against by any person for engaging in protected activities specified in 40.117(1)"a" may seek a remedy for the discharge or discrimination through an administrative proceeding in the U.S. Department of Labor. The administration proceeding must be initiated within 180 days after an alleged violation occurs. The employee may file for the administrative proceeding by filing a complaint alleging the violation with the Department of Labor, Employment Standards Administration, Wage and Hour Division. The Department of Labor may order reinstatement, back pay, and compensatory damages.

40.117(3) A violation of 40.117(1)*"a"*(1) or 40.117(1)*"a"*(4) by a licensee or registrant, an applicant for a license or registration, or a contractor or subcontractor of a licensee or applicant may be grounds for:

a. Denial, revocation, or suspension of the license or registration.

b. Imposition of a civil penalty on the licensee, registrant, or applicant.

c. Other enforcement action.

40.117(4) Actions taken by an employer or others which adversely affect an employee may be predicated upon nondiscriminatory grounds. The prohibition applies when the adverse action occurs because the employee has engaged in protected activities. An employee's engagement in protected activities does not automatically render the employee immune from discharge or discipline for legitimate reasons or from adverse action dictated by nonprohibited considerations.

40.117(5) No agreement affecting the compensation, terms, conditions, or privileges of employment, including an agreement to settle a complaint filed by an employee with the Department of Labor pursuant to 641—Chapters 38 to 45, may contain any provision which would prohibit, restrict, or otherwise discourage an employee from participating in protected activity as defined in 40.117(1)*"a"* including, but not limited to, providing information to the agency or to the individual's employer on potential violations or other matters within the agency's regulatory responsibilities.

CHAPTER 40

APPENDIX A

PROTECTION FACTORS FOR RESPIRATORS[a]

	Operating Mode	Assigned Protection Factor
I. Air-Purifying Respirators (particulate 1A[b] only) 1A[c]:		
Filtering facepiece disposable[d]	Negative Pressure	([d])
Facepiece, half[e]	Negative Pressure	10
Facepiece, full	Negative Pressure	100
Facepiece, half	Powered air-purifying respirators	50
Facepiece, full	Powered air-purifying respirators	1000
Helmet/hood	Powered air-purifying respirators	1000
Facepiece, loose-fitting	Powered air-purifying respirators	25
II. Atmosphere-Supplying Respirators (particulate, gases and vapors 1A[f]):		
1. Air-line respirator:		
Facepiece, half	Demand	10
Facepiece, half	Continuous Flow	50
Facepiece, half	Pressure Demand	50
Facepiece, full	Demand	100
Facepiece, full	Continuous Flow	1000
Facepiece, full	Pressure Demand	1000
Helmet/hood	Continuous Flow	1000
Facepiece, loose-fitting	Continuous Flow	25
Suit	Continuous Flow	([g])
2. Self-contained breathing apparatus (SCBA):		
Facepiece, full	Demand	[h]100
Facepiece, full	Pressure Demand	[i]10,000
Facepiece, full	Demand, Recirculating	[h]100
Facepiece, full	Positive Pressure Recirculating	[i]10,000
III. Combination Respirators:		
Any combination of air-purifying and atmosphere-supplying respirators	(1) Assigned protection factor for type and mode of operation as listed above	

[a]These assigned protection factors apply only in a respiratory protection program that meets the requirement of 641—Chapter 40. They are applicable only to airborne radiological hazards and may not be appropriate to circumstances when chemical or other respiratory hazards exist instead of, or in addition to, radioactive hazards. Selection and use of respirators for such circumstances must also comply with Department of Labor regulations.

Radioactive contaminants for which the concentration values in Table I, Column 3, of Appendix B to 641—Chapter 40 are based on internal dose due to inhalation may, in addition, present external exposure

hazards at higher concentrations. Under these circumstances, limitations on occupancy may have to be governed by external dose limits.

[b]Air-purifying respirators with APF<100 must be equipped with particulate filters that are at least 95 percent efficient. Air-purifying respirators with APF=100 must be equipped with particulate filters that are at least 99 percent efficient. Air-purifying respirators with APF>100 must be equipped with particulate filters that are at least 99.97 percent efficient.

[c]The licensee may apply to the agency for the use of an APF greater than 1 for sorbent cartridges as protection against airborne radioactive gases and vapors (e.g., radioiodine).

[d]Licensees may permit individuals to use this type of respirator who have not been medically screened or fit tested on the device provided that no credit be taken for the use in estimating intake or dose. It is also recognized that it is difficult to perform an effective positive or negative pressure pre-use user seal check on this type of device. All other respiratory protection program requirements listed in 641—40.50(136C) apply. An assigned protection factor has not been assigned for these devices. However, an APF equal to 10 may be used if the licensee can demonstrate a fit factor of at least 100 by use of a validated or evaluated, qualitative or quantitative fit test.

[e]Under-chin type only. No distinction is made in this Appendix between elastomeric half-masks with replaceable cartridges and those designed with the filter medium as an integral part of the facepiece (e.g., disposable or reusable disposable). Both types are acceptable so long as the seal area of the latter contains some substantial type of seal-enhancing material such as rubber or plastic, the two or more suspension straps are adjustable, the filter medium is at least 95 percent efficient, and all other requirements of 641—Chapter 40 are met.

[f]The assigned protection factors for gases and vapors are not applicable to radioactive contaminants that present an absorption or submersion hazard. For tritium oxide vapor, approximately one-third of the intake occurs by absorption through the skin so that an overall protection factor of 3 is appropriate when atmosphere-supplying respirators are used to protect against tritium oxide. Exposure to radioactive noble gases is not considered a significant respiratory hazard, and protective actions for these contaminants should be based on external (submersion) dose considerations.

[g]No NIOSH approval schedule is currently available for atmosphere-supplying suits. This equipment may be used in an acceptable respiratory protection program as long as all the other minimum program requirements, with the exception of fit testing, are met.

[h]The licensee should implement institutional controls to ensure that these devices are not used in areas immediately dangerous to life or health.

[i]This type of respirator may be used as an emergency device in unknown concentrations for protection against inhalation hazards. External radiation hazards and other limitations to permitted exposure such as skin absorption shall be taken into account in these circumstances. This device may not be used by any individual who experiences perceptible outward leakage of breathing gas while wearing the device.

CHAPTER 40

APPENDIX B

ANNUAL LIMITS ON INTAKE (ALI) AND DERIVED AIR CONCENTRATIONS (DAC) OF RADIONUCLIDES FOR OCCUPATIONAL EXPOSURE; EFFLUENT CONCENTRATIONS; CONCENTRATIONS FOR RELEASE TO SANITARY SEWERAGE

Introduction

For each radionuclide, Table I indicates the chemical form which is to be used for selecting the appropriate ALI or DAC value. The ALIs and DACs for inhalation are given for an aerosol with an activity median aerodynamic diameter (AMAD) of 1 μm, micron, and for three classes (D,W,Y) of radioactive material, which refer to their retention (approximately days, weeks or years) in the pulmonary region of the lung. This classification applies to a range of clearance half-times for D if less than 10 days, for W from 10 to 100 days, and for Y greater than 100 days. Table II provides concentration limits for airborne and liquid effluents released to the general environment. Table III provides concentration limits for discharges to sanitary sewerage.

NOTE: The values in Tables I, II, and III are presented in the computer "E" notation. In this notation a value of 6E-02 represents a value of 6×10^{-2} or 0.06, 6E+2 represents 6×10^{2} or 600, and 6E+0 represents 6×10^{0} or 6.

TABLE I "OCCUPATIONAL VALUES"

Note that the columns in Table I of this appendix captioned "Oral Ingestion ALI," "Inhalation ALI," and "DAC," are applicable to occupational exposure to radioactive material.

The ALIs in this appendix are the annual intakes of given radionuclide by "Reference Person" which would result in either (1) a committed effective dose equivalent of 5 rem (0.05 Sv), stochastic ALI, or (2) a committed dose equivalent of 50 rem (0.5 Sv) to an organ or tissue, nonstochastic ALI. The stochastic ALIs were derived to result in a risk, due to irradiation of organs and tissues, comparable to the risk associated with deep dose equivalent to the whole body of 5 rem (0.05 Sv). The derivation includes multiplying the committed dose equivalent to an organ or tissue by a weighting factor, w_T. This weighting factor is the proportion of the risk of stochastic effects resulting from irradiation of the organ or tissue, T, to the total risk of stochastic effects when the whole body is irradiated uniformly. The values of w_T are listed under the definition of weighting factor in 40.2. The nonstochastic ALIs were derived to avoid nonstochastic effects, such as prompt damage to tissue or reduction in organ function.

A value of $w_T = 0.06$ is applicable to each of the five organs or tissues in the "remainder" category receiving the highest dose equivalents, and the dose equivalents of all other remaining tissues may be disregarded. The following portions of the GI tract—stomach, small intestine, upper large intestine, and lower large intestine—are to be treated as four separate organs.

The air concentration values listed in Table II, Column 1 were derived by one of two methods. For those radionuclides for which the stochastic limit is governing, the occupational stochastic inhalation ALI was divided by 2.4×10^{9} (ml), relating the inhalation ALI to the DAC, as explained above, and then divided by a factor of 300. The factor of 300 includes the following components: a factor of 50 to relate the 5 rem (0.05 Sv) annual occupational dose limit to the 0.1 rem limit for members of the public, a factor of 3 to adjust for the difference in exposure time and the inhalation rate for a worker and that for members of the public; and a factor of 2 to adjust the occupational values, derived for adults, so that they are applicable to other age groups.

When an ALI is defined by the stochastic dose limit, this value alone is given. When an ALI is determined by the nonstochastic dose limit to an organ, the organ or tissue to which the limit applies is shown, and the ALI for the stochastic limit is shown in parentheses. Abbreviated organ or tissue designations are used:

LLI wall	=	lower large intestine wall;
St. wall	=	stomach wall;
Blad wall	=	bladder wall; and
Bone surf	=	bone surface.

The use of the ALIs listed first, the more limiting of the stochastic and nonstochastic ALIs, will ensure that nonstochastic effects are avoided and that the risk of stochastic effects is limited to an acceptably low value. If, in a particular situation involving a radionuclide for which the nonstochastic ALI is limiting, use of that nonstochastic ALI is considered unduly conservative, the licensee may use the stochastic ALI to determine the committed effective dose equivalent. However, the licensee shall also ensure that the 50 rem (0.5 Sv) dose equivalent limit for any organ or tissue is not exceeded by the sum of the external deep dose equivalent plus the internal committed dose equivalent to that organ, not the effective dose. For the case where there is no external dose contribution, this would be demonstrated if the sum of the fractions of the nonstochastic ALIs (ALI_{ns}) that contribute to the committed dose equivalent to the organ receiving the highest dose does not exceed unity, that is, Σ (intake (in μCi) of each radionuclide/ALI_{ns}) ≤ 1.0. If there is an external deep dose equivalent contribution of H_d, then this sum must be less than $1 - (H_d/50)$, instead of ≤ 1.0.

Note that the dose equivalents for an extremity, skin, and lens of the eye are not considered in computing the committed effective dose equivalent, but are subject to limits that must be met separately.

The derived air concentration (DAC) values are derived limits intended to control chronic occupational exposures. The relationship between the DAC and the ALI is given by:
DAC = ALI(in μCi)/(2000 hours per working year × 60 minutes/hour × 2×10^4 ml per minute) = [ALI/2.4×10^9] μCi/ml, where 2×10^4 ml is the volume of air breathed per minute at work by Reference Person under working conditions of light work.

The DAC values relate to one of two modes of exposure: either external submersion or the internal committed dose equivalents resulting from inhalation of radioactive materials. DACs based upon submersion are for immersion in a semi-infinite cloud of uniform concentration and apply to each radionuclide separately.

The ALI and DAC values include contributions to exposure by the single radionuclide named and any in-growth of daughter radionuclides produced in the body by decay of the parent. However, intakes that include both the parent and daughter radionuclides should be treated by the general method appropriate for mixtures.

The values of ALI and DAC do not apply directly when the individual both ingests and inhales a radionuclide, when the individual is exposed to a mixture of radionuclides by either inhalation or ingestion or both, or when the individual is exposed to both internal and external irradiation. See 641—40.16(136C). When an individual is exposed to radioactive materials which fall under several of the translocation classifications of the same radionuclide, such as, Class D, Class W, or Class Y, the exposure may be evaluated as if it were a mixture of different radionuclides.

It should be noted that the classification of a compound as Class D, W, or Y is based on the chemical form of the compound and does not take into account the radiological half-life of different radionuclides. For this reason, values are given for Class D, W, and Y compounds, even for very short-lived radionuclides.

TABLE II "EFFLUENT CONCENTRATIONS"

The columns in Table II of this appendix captioned "Effluents," "Air" and "Water" are applicable to the assessment and control of dose to the public, particularly in the implementation of the provisions of 641—40.27(136C). The concentration values given in Columns 1 and 2 of Table II are equivalent to the radionuclide concentrations which, if inhaled or ingested continuously over the course of a year, would produce a total effective dose equivalent of 0.05 rem (0.5 mSv).

Consideration of nonstochastic limits has not been included in deriving the air and water effluent concentration limits because nonstochastic effects are presumed not to occur at or below the dose levels

established for individual members of the public. For radionuclides, where the nonstochastic limit was governing in deriving the occupational DAC, the stochastic ALI was used in deriving the corresponding airborne effluent limit in Table II. For this reason, the DAC and airborne effluent limits are not always proportional as they were in Appendix A of this chapter of the eighth edition of Volume I of the Suggested State Regulations for Control of Radiation.

The air concentration values listed in Table II, Column 1 were derived by one of two methods. For those radionuclides for which the stochastic limit is governing, the occupational stochastic inhalation ALI was divided by 2.4×10^9 (ml), relating the inhalation ALI to the DAC, as explained above, and then divided by a factor of 300. The factor of 300 includes the following components: a factor of 50 to relate the 5 rem (0.05 Sv) annual occupational dose limit to the 0.1 rem limit for members of the public, a factor of 3 to adjust for the difference in exposure time and the inhalation rate for a worker and that for members of the public; and a factor of 2 to adjust the occupational values, derived for adults, so that they are applicable to other age groups.

For those radionuclides for which submersion, that is external dose, is limiting, the occupational DAC in Table I, Column 3 was divided by 219. The factor of 219 is composed of a factor of 50, as described above, and a factor of 4.38 relating occupational exposure for 2,000 hours per year to full-time exposure (8,760 hours per year). Note that an additional factor of 2 for age considerations is not warranted in the submersion case.

The water concentrations were derived by taking the most restrictive occupational stochastic oral ingestion ALI and dividing by 7.3×10^7. The factor of 7.3×10^7 (ml) includes the following components: the factors of 50 and 2 described above and a factor of 7.3×10^5 (ml) which is the annual water intake of Reference Person.

Note 2 of this appendix provides groupings of radionuclides which are applicable to unknown mixtures of radionuclides. These groupings, including occupational inhalation ALIs and DACs, air and water effluent concentrations and releases to sewer, require demonstrating that the most limiting radionuclides in successive classes are absent. The limit for the unknown mixture is defined when the presence of one of the listed radionuclides cannot be definitely excluded as being present either from knowledge of the radionuclide composition of the source or from actual measurements.

TABLE III "RELEASES TO SEWERS"

The monthly average concentrations for release to sanitary sewerage are applicable to the provisions in 40.72. The concentration values were derived by taking the most restrictive occupational stochastic oral ingestion ALI and dividing by 7.3×10^6 (ml). The factor of 7.3×10^6 (ml) is composed of a factor of 7.3×10^5 (ml), the annual water intake by Reference Person, and a factor of 10, such that the concentrations, if the sewage released by the licensee were the only source of water ingested by a Reference Person during a year, would result in a committed effective dose equivalent of 0.5 rem.

LIST OF ELEMENTS

Name	Symbol	Atomic Number	Name	Symbol	Atomic Number
Actinium	Ac	89	Mercury	Hg	80
Aluminum	Al	13	Molybdenum	Mo	42
Americium	Am	95	Neodymium	Nd	60
Antimony	Sb	51	Neptunium	Np	93
Argon	Ar	18	Nickel	Ni	28
Arsenic	As	33	Niobium	Nb	41
Astatine	At	85	Nitrogen	N	7
Barium	Ba	56	Osmium	Os	76
Berkelium	Bk	97	Oxygen	O	8
Beryllium	Be	4	Palladium	Pd	46
Bismuth	Bi	83	Phosphorus	P	15

Bromine	Br	35
Cadmium	Cd	48
Calcium	Ca	20
Californium	Cf	98
Carbon	C	6
Cerium	Ce	58
Cesium	Cs	55
Chlorine	Cl	17
Chromium	Cr	24
Cobalt	Co	27
Copper	Cu	29
Curium	Cm	96
Dysprosium	Dy	66
Einsteinium	Es	99
Erbium	Er	68
Europium	Eu	63
Fermium	Fm	100
Fluorine	F	9
Francium	Fr	87
Gadolinium	Gd	64
Gallium	Ga	31
Germanium	Ge	32
Gold	Au	79
Hafnium	Hf	72
Holmium	Ho	67
Hydrogen	H	1
Indium	In	49
Iodine	I	53
Iridium	Ir	77
Iron	Fe	26
Krypton	Kr	36
Lanthanum	La	57
Lead	Pb	82
Lutetium	Lu	71
Magnesium	Mg	12
Manganese	Mn	25
Mendelevium	Md	101
Platinum	Pt	78
Plutonium	Pu	94
Polonium	Po	84
Potassium	K	19
Praseodymium	Pr	59
Promethium	Pm	61
Protactinium	Pa	91
Radium	Ra	88
Radon	Rn	86
Rhenium	Re	75
Rhodium	Rh	45
Rubidium	Rb	37
Ruthenium	Ru	44
Samarium	Sm	62
Scandium	Sc	21
Selenium	Se	34
Silicon	Si	14
Silver	Ag	47
Sodium	Na	11
Strontium	Sr	38
Sulfur	S	16
Tantalum	Ta	73
Technetium	Tc	43
Tellurium	Te	52
Terbium	Tb	65
Thallium	Tl	81
Thorium	Th	90
Thulium	Tm	69
Tin	Sn	50
Titanium	Ti	22
Tungsten	W	74
Uranium	U	92
Vanadium	V	23
Xenon	Xe	54
Ytterbium	Yb	70
Yttrium	Y	39
Zinc	Zn	30
Zirconium	Zr	40

			Table I Occupational Values			Table II Effluent Concentrations		Table III Releases to Sewers
			Col. 1	Col. 2	Col. 3	Col. 1	Col. 2	
			Oral Ingestion	INHALATION				Monthly Average
Atomic Radio-nuclide No.		Class	ALI (µCi)	ALI (µCi)	DAC (µCi/ml)	Air (µCi/ml)	Water (µCi/ml)	Concentration (µCi/ml)
1	Hydrogen-3	Water, DAC includes skin absorption	8E+4	8E+4	2E-5	1E-7	1E-3	1E-2
		Gas (HT or T_2) Submersion[1]: Use above values as HT and T_2 oxidize in air and in the body to HTO.						
4	Beryllium-7	W, all compounds except those given for Y	4E+4	2E+4	9E-6	3E-8	6E-4	6E-3
		Y, oxides, halides, and nitrates	-	2E+4	8E-6	3E-8	-	-
4	Beryllium-10	W, see ^{7}Be	1E+3	2E+2	6E-8	2E-10	-	-
			LLI wall (1E+3)	-	-	-	2E-5	2E-4
		Y, see ^{7}Be	-	1E+1	6E-9	2E-11	-	-
6	Carbon-11[2]	Monoxide	-	1E+6	5E-4	2E-6	-	-
		Dioxide	-	6E+5	3E-4	9E-7	-	-
		Compounds	4E+5	4E+5	2E-4	6E-7	6E-3	6E-2
6	Carbon-14	Monoxide	-	2E+6	7E-4	2E-6	-	-
		Dioxide	-	2E+5	9E-5	3E-7	-	-
		Compounds	2E+3	2E+3	1E-6	3E-9	3E-5	3E-4
7	Nitrogen-13[2]	Submersion[1]	-	-	4E-6	2E-8	-	-
8	Oxygen-15[2]	Submersion[1]	-	-	4E-6	2E-8	-	-
9	Fluorine-18[2]	D, fluorides of H, Li, Na, K, Rb, Cs, and Fr	5E+4	7E+4	3E-5	1E-7	-	-
			St wall (5E+4)	-	-	-	7E-4	7E-3
		W, fluorides of Be, Mg, Ca, Sr, Ba, Ra, Al, Ga, In, Tl, As, Sb, Bi, Fe, Ru, Os, Co, Ni, Pd, Pt, Cu, Ag, Au, Zn, Cd, Hg, Sc, Y, Ti, Zr, V, Nb, Ta, Mn, Tc, and Re		9E+4	4E-5	1E-7	-	-
		Y, lanthanum fluoride	-	8E+4	3E-5	1E-7	-	-
11	Sodium-22	D, all compounds	4E+2	6E+2	3E-7	9E-10	6E-6	6E-5
11	Sodium-24	D, all compounds	4E+3	5E+3	2E-6	7E-9	5E-5	5E-4
12	Magnesium-28	D, all compounds except those given for W	7E+2	2E+3	7E-7	2E-9	9E-6	9E-5
		W, oxides, hydroxides, carbides, halides, and nitrates	-	1E+3	5E-7	2E-9	-	-
13	Aluminum-26	D, all compounds except those given for W	4E+2	6E+1	3E-8	9E-11	6E-6	6E-5
		W, oxides, hydroxides, carbides, halides, and nitrates	-	9E+1	4E-8	1E-10	-	-

			Table I Occupational Values			Table II Effluent Concentrations		Table III Releases to Sewers
			Col. 1	Col. 2	Col. 3	Col. 1	Col. 2	
			Oral Ingestion	INHALATION				Monthly Average
Atomic Radio-nuclide No.		Class	ALI (µCi)	ALI (µCi)	DAC (µCi/ml)	Air (µCi/ml)	Water (µCi/ml)	Concentration (µCi/ml)
14	Silicon-31	D, all compounds except those given for W and Y	9E+3	3E+4	1E-5	4E-8	1E-4	1E-3
		W, oxides, hydroxides, carbides, and nitrates	-	3E+4	1E-5	5E-8	-	-
		Y, aluminosilicate glass	-	3E+4	1E-5	4E-8	-	-
14	Silicon-32	D, see ^{31}Si	2E+3	2E+2	1E-7	3E-10	-	-
			LLI wall (3E+3)	-	-	-	4E-5	4E-4
		W, see ^{31}Si	-	1E+2	5E-8	2E-10	-	-
		Y, see ^{31}Si	-	5E+0	2E-9	7E-12	-	-
15	Phosphorus-32	D, all compounds except phosphates given for W	6E+2	9E+2	4E-7	1E-9	9E-6	9E-5
		W, phosphates of Zn^{2+}, S^{3+}, Mg^{2+}, Fe^{3+}, Bi^{3+}, and lanthanides	-	4E+2	2E-7	5E-10	-	-
15	Phosphorus-33	D, see ^{32}P	6E+3	8E+3	4E-6	1E-8	8E-5	8E-4
		W, see ^{32}P	-	3E+3	1E-6	4E-9	-	-
16	Sulfur-35	Vapor	-	1E+4	6E-6	2E-8	-	-
		D, sulfides and sulfates except those given for W	1E+4	2E+4	7E-6	2E-8	-	-
			LLI wall (8E+3)	-	-	-	1E-4	1E-3
		W, elemental sulfur,	6E+3					
		sulfides of Sr, Ba, Ge, Sn, Pb, As, Sb, Bi, Cu, Ag, Au, Zn, Cd, Hg, W, and Mo. Sulfates of Ca, Sr, Ba, Ra, As, Sb, and Bi	-	2E+3	9E-7	3E-9	-	-
17	Chlorine-36	D, chlorides of H, Li, Na, K, Rb, Cs, and Fr	2E+3	2E+3	1E-6	3E-9	2E-5	2E-4
		W, chlorides of lanthanides, Be, Mg, Ca, Sr, Ba, Ra, Al, Ga, In, Tl, Ge, Sn, Pb, As, Sb, Bi, Fe, Ru, Os, Co, Rh, Ir, Ni, Pd, Pt, Cu, Ag, Au, Zn, Cd, Hg, Sc, Y, Ti, Zr, Hf, V, Nb, Ta, Cr, Mo, W, Mn, Tc, and Re	-	2E+2	1E-7	3E-10	-	-

			Table I Occupational Values			Table II Effluent Concentrations		Table III Releases to Sewers
			Col. 1	Col. 2	Col. 3	Col. 1	Col. 2	
			Oral Ingestion	INHALATION				Monthly Average
Atomic Radio-nuclide No.		Class	ALI (µCi)	ALI (µCi)	DAC (µCi/ml)	Air (µCi/ml)	Water (µCi/ml)	Concentration (µCi/ml)
17	Chlorine-38[2]	D, see ^{36}Cl	2E+4	4E+4	2E-5	6E-8	-	-
			St wall					
			(3E+4)	-	-	-	3E-4	3E-3
		W, see ^{36}Cl	-	5E+4	2E-5	6E-8	-	-
17	Chlorine-39[2]	D, see ^{36}Cl	2E+4	5E+4	2E-5	7E-8	-	-
			St wall					
			(4E+4)	-	-	-	5E-4	5E-3
		W, see ^{36}Cl	-	6E+4	2E-5	8E-8	-	-
18	Argon-37	Submersion[1]	-	-	1E+0	6E-3	-	-
18	Argon-39	Submersion[1]	-	-	2E-4	8E-7	-	-
18	Argon-41	Submersion[1]	-	-	3E-6	1E-8	-	-
19	Potassium-40	D, all compounds	3E+2	4E+2	2E-7	6E-10	4E-6	4E-5
19	Potassium-42	D, all compounds	5E+3	5E+3	2E-6	7E-9	6E-5	6E-4
19	Potassium-43	D, all compounds	6E+3	9E+3	4E-6	1E-8	9E-5	9E-4
19	Potassium-44[2]	D, all compounds	2E+4	7E+4	3E-5	9E-8	-	-
			St wall					
			(4E+4)	-	-	-	5E-4	5E-3
19	Potassium-45[2]	D, all compounds	3E+4	1E+5	5E-5	2E-7	-	-
			St wall					
			(5E+4)	-	-	-	7E-4	7E-3
20	Calcium-41	W, all compounds	3E+3	4E+3	2E-6	-	-	-
			Bone surf	Bone surf				
			(4E+3)	(4E+3)	-	5E-9	6E-5	6E-4
20	Calcium-45	W, all compounds	2E+3	8E+2	4E-7	1E-9	2E-5	2E-4
20	Calcium-47	W, all compounds	8E+2	9E+2	4E-7	1E-9	1E-5	1E-4
21	Scandium-43	Y, all compounds	7E+3	2E+4	9E-6	3E-8	1E-4	1E-3
21	Scandium-44m	Y, all compounds	5E+2	7E+2	3E-7	1E-9	7E-6	7E-5
21	Scandium-44	Y, all compounds	4E+3	1E+4	5E-6	2E-8	5E-5	5E-4
21	Scandium-46	Y, all compounds	9E+2	2E+2	1E-7	3E-10	1E-5	1E-4
21	Scandium-47	Y, all compounds	2E+3	3E+3	1E-6	4E-9	-	-
			LLI wall					
			(3E+3)	-	-	-	4E-5	4E-4
21	Scandium-48	Y, all compounds	8E+2	1E+3	6E-7	2E-9	1E-5	1E-4
21	Scandium-49[2]	Y, all compounds	2E+4	5E+4	2E-5	8E-8	3E-4	3E-3
22	Titanium-44	D, all compounds except those given for W and Y	3E+2	1E+1	5E-9	2E-11	4E-6	4E-5
		W, oxides, hydroxides, carbides, halides, and nitrates	-	3E+1	1E-8	4E-11	-	-
		Y, SrTi0	-	6E+0	2E-9	8E-12	-	-

			Table I Occupational Values			Table II Effluent Concentrations		Table III Releases to Sewers
			Col. 1	Col. 2	Col. 3	Col. 1	Col. 2	
			Oral Ingestion	INHALATION				Monthly Average
Atomic Radio-nuclide No.		Class	ALI (μCi)	ALI (μCi)	DAC (μCi/ml)	Air (μCi/ml)	Water (μCi/ml)	Concentration (μCi/ml)
22	Titanium-45	D, see ^{44}Ti	9E+3	3E+4	1E-5	3E-8	1E-4	1E-3
		W, see ^{44}Ti	-	4E+4	1E-5	5E-8	-	-
		Y, see ^{44}Ti	-	3E+4	1E-5	4E-8	-	-
23	Vanadium-47[2]	D, all compounds except those given for W	3E+4	8E+4	3E-5	1E-7	-	-
			St wall (3E+4)	-	-	-	4E-4	4E-3
		W, oxides, hydroxides, carbides, and halides	-	1E+5	4E-5	1E-7	-	-
23	Vanadium-48	D, see ^{47}V	6E+2	1E+3	5E-7	2E-9	9E-6	9E-5
		W, see ^{47}V	-	6E+2	3E-7	9E-10	-	-
23	Vanadium-49	D, see ^{47}V	7E+4	3E+4	1E-5	-	-	-
			LLI wall (9E+4)	Bone surf (3E+4)	-	5E-8	1E-3	1E-2
		W, see ^{47}V	-	2E+4	8E-6	2E-8	-	-
24	Chromium-48	D, all compounds except those given for W and Y	6E+3	1E+4	5E-6	2E-8	8E-5	8E-4
		W, halides and nitrates	-	7E+3	3E-6	1E-8	-	-
		Y, oxides and hydroxides	-	7E+3	3E-6	1E-8	-	-
24	Chromium-49[2]	D, see ^{48}Cr	3E+4	8E+4	4E-5	1E-7	4E-4	4E-3
		W, see ^{48}Cr	-	1E+5	4E-5	1E-7	-	-
		Y, see ^{48}Cr	-	9E+4	4E-5	1E-7	-	-
24	Chromium-51	D, see ^{48}Cr	4E+4	5E+4	2E-5	6E-8	5E-4	5E-3
		W, see ^{48}Cr	-	2E+4	1E-5	3E-8	-	-
		Y, see ^{48}Cr	-	2E+4	8E-6	3E-8	-	-
25	Manganese-51[2]	D, all compounds except those given for W	2E+4	5E+4	2E-5	7E-8	3E-4	3E-3
		W, oxides, hydroxides, halides, and nitrates	-	6E+4	3E-5	8E-8	-	-
25	Manganese-52m[2]	D, see ^{51}Mn	3E+4	9E+4	4E-5	1E-7	-	-
			St wall (4E+4)	-	-	-	5E-4	5E-3
		W, see ^{51}Mn	-	1E+5	4E-5	1E-7	-	-
25	Manganese-52	D, see ^{51}Mn	7E+2	1E+3	5E-7	2E-9	1E-5	1E-4
		W, see ^{51}Mn	-	9E+2	4E-7	1E-9	-	-

			Table I Occupational Values			Table II Effluent Concentrations		Table III Releases to Sewers
			Col. 1	Col. 2	Col. 3	Col. 1	Col. 2	
			Oral Ingestion	INHALATION				Monthly Average
Atomic Radio-nuclide No.		Class	ALI (µCi)	ALI (µCi)	DAC (µCi/ml)	Air (µCi/ml)	Water (µCi/ml)	Concentration (µCi/ml)
25	Manganese-53	D, see ^{51}Mn	5E+4	1E+4	5E-6	-	7E-4	7E-3
				Bone surf				
			-	(2E+4)	-	3E-8	-	-
		W, see ^{51}Mn	-	1E+4	5E-6	2E-8	-	-
25	Manganese-54	D, see ^{51}Mn	2E+3	9E+2	4E-7	1E-9	3E-5	3E-4
		W, see ^{51}Mn	-	8E+2	3E-7	1E-9	-	-
25	Manganese-56	D, see ^{51}Mn	5E+3	2E+4	6E-6	2E-8	7E-5	7E-4
		W, see ^{51}Mn	-	2E+4	9E-6	3E-8	-	-
26	Iron-52	D, all compounds except those given for W	9E+2	3E+3	1E-6	4E-9	1E-5	1E-4
		W, oxides, hydroxides, and halides	-	2E+3	1E-6	3E-9	-	-
26	Iron-55	D, see ^{52}Fe	9E+3	2E+3	8E-7	3E-9	1E-4	1E-3
		W, see ^{52}Fe	-	4E+3	2E-6	6E-9	-	-
26	Iron-59	D, see ^{52}Fe	8E+2	3E+2	1E-7	5E-10	1E-5	1E-4
		W, see ^{52}Fe	-	5E+2	2E-7	7E-10	-	-
26	Iron-60	D, see ^{52}Fe	3E+1	6E+0	3E-9	9E-12	4E-7	4E-6
		W, see ^{52}Fe	-	2E+1	8E-9	3E-11	-	-
27	Cobalt-55	W, all compounds except those given for Y	1E+3	3E+3	1E-6	4E-9	2E-5	2E-4
		Y, oxides, hydroxides, halides, and nitrates	-	3E+3	1E-6	4E-9	-	-
27	Cobalt-56	W, see ^{55}Co	5E+2	3E+2	1E-7	4E-10	6E-6	6E-5
		Y, see ^{55}Co	4E+2	2E+2	8E-8	3E-10	-	-
27	Cobalt-57	W, see ^{55}Co	8E+3	3E+3	1E-6	4E-9	6E-5	6E-4
		Y, see ^{55}Co	4E+3	7E+2	3E-7	9E-10	-	-
27	Cobalt-58m	W, see ^{55}Co	6E+4	9E+4	4E-5	1E-7	8E-4	8E-3
		Y, see ^{55}Co	-	6E+4	3E-5	9E-8	-	-
27	Cobalt-58	W, see ^{55}Co	2E+3	1E+3	5E-7	2E-9	2E-5	2E-4
		Y, see ^{55}Co	1E+3	7E+2	3E-7	1E-9	-	-
27	Cobalt-60m[2]	W, see ^{55}Co	1E+6	4E+6	2E-3	6E-6	-	-
			St wall					
			(1E+6)	-	-	-	2E-2	2E-1
		Y, see ^{55}Co	-	3E+6	1E-3	4E-6	-	-
27	Cobalt-60	W, see ^{55}Co	5E+2	2E+2	7E-8	2E-10	3E-6	3E-5
		Y, see ^{55}Co	2E+2	3E+1	1E-8	5E-11	-	-
27	Cobalt-61[2]	W, see ^{55}Co	2E+4	6E+4	3E-5	9E-8	3E-4	3E-3
		Y, see ^{55}Co	2E+4	6E+4	2E-5	8E-8	-	-

			Table I Occupational Values			Table II Effluent Concentrations		Table III Releases to Sewers
			Col. 1	Col. 2	Col. 3	Col. 1	Col. 2	
			Oral Ingestion	INHALATION				Monthly Average
Atomic Radio-nuclide No.		Class	ALI (μCi)	ALI (μCi)	DAC (μCi/ml)	Air (μCi/ml)	Water (μCi/ml)	Concentration (μCi/ml)
27	Cobalt-62m[2]	W, see ^{55}Co	4E+4	2E+5	7E-5	2E-7	-	-
			St wall					
			(5E+4)	-	-	-	7E-4	7E-3
		Y, see ^{55}Co	-	2E+5	6E-5	2E-7	-	-
28	Nickel-56	D, all compounds except those given for W	1E+3	2E+3	8E-7	3E-9	2E-5	2E-4
		W, oxides, hydroxides, and carbides	-	1E+3	5E-7	2E-9	-	-
		Vapor	-	1E+3	5E-7	2E-9	-	-
28	Nickel-57	D, see ^{56}Ni	2E+3	5E+3	2E-6	7E-9	2E-5	2E-4
		W, see ^{56}Ni	-	3E+3	1E-6	4E-9	-	-
		Vapor	-	6E+3	3E-6	9E-9	-	-
28	Nickel-59	D, see ^{56}Ni	2E+4	4E+3	2E-6	5E-9	3E-4	3E-3
		W, see ^{56}Ni	-	7E+3	3E-6	1E-8	-	-
		Vapor	-	2E+3	8E-7	3E-9	-	-
28	Nickel-63	D, see ^{56}Ni	9E+3	2E+3	7E-7	2E-9	1E-4	1E-3
		W, see ^{56}Ni	-	3E+3	1E-6	4E-9	-	-
		Vapor	-	8E+2	3E-7	1E-9	-	-
28	Nickel-65	D, see ^{56}Ni	8E+3	2E+4	1E-5	3E-8	1E-4	1E-3
		W, see ^{56}Ni	-	3E+4	1E-5	4E-8	-	-
		Vapor	-	2E+4	7E-6	2E-8	-	-
28	Nickel-66	D, see ^{56}Ni	4E+2 LLI wall	2E+3	7E-7	2E-9	-	-
			(5E+2)	-	-	-	6E-6	6E-5
		W, see ^{56}Ni	-	6E+2	3E-7	9E-10	-	-
		Vapor	-	3E+3	1E-6	4E-9	-	-
29	Copper-60[2]	D, all compounds except those given for W and Y	3E+4	9E+4	4E-5	1E-7	-	-
			St wall					
			(3E+4)	-	-	-	4E-4	4E-3
		W, sulfides, halides, and nitrates	-	1E+5	5E-5	2E-7	-	-
		Y, oxides and hydroxides	-	1E+5	4E-5	1E-7	-	-
29	Copper-61	D, see ^{60}Cu	1E+4	3E+4	1E-5	4E-8	2E-4	2E-3
		W, see ^{60}Cu	-	4E+4	2E-5	6E-8	-	-
		Y, see ^{60}Cu	-	4E+4	1E-5	5E-8	-	-
29	Copper-64	D, see ^{60}Cu	1E+4	3E+4	1E-5	4E-8	2E-4	2E-3
		W, see ^{60}Cu	-	2E+4	1E-5	3E-8	-	-
		Y, see ^{60}Cu	-	2E+4	9E-6	3E-8	-	-
29	Copper-67	D, see ^{60}Cu	5E+3	8E+3	3E-6	1E-8	6E-5	6E-4
		W, see ^{60}Cu	-	5E+3	2E-6	7E-9	-	-
		Y, see ^{60}Cu	-	5E+3	2E-6	6E-9	-	-

			Table I Occupational Values			Table II Effluent Concentrations		Table III Releases to Sewers
			Col. 1	Col. 2	Col. 3	Col. 1	Col. 2	
			Oral Ingestion	INHALATION				Monthly Average
Atomic Radio-nuclide No.		Class	ALI (μCi)	ALI (μCi)	DAC (μCi/ml)	Air (μCi/ml)	Water (μCi/ml)	Concentration (μCi/ml)
30	Zinc-62	Y, all compounds	1E+3	3E+3	1E-6	4E-9	2E-5	2E-4
30	Zinc-63[2]	Y, all compounds	2E+4	7E+4	3E-5	9E-8	-	-
			St wall					
			(3E+4)	-	-	-	3E-4	3E-3
30	Zinc-65	Y, all compounds	4E+2	3E+2	1E-7	4E-10	5E-6	5E-5
30	Zinc-69m	Y, all compounds	4E+3	7E+3	3E-6	1E-8	6E-5	6E-4
30	Zinc-69[2]	Y, all compounds	6E+4	1E+5	6E-5	2E-7	8E-4	8E-3
30	Zinc-71m	Y, all compounds	6E+3	2E+4	7E-6	2E-8	8E-5	8E-4
30	Zinc-72	Y, all compounds	1E+3	1E+3	5E-7	2E-9	1E-5	1E-4
31	Gallium-65[2]	D, all compounds except those given for W	5E+4	2E+5	7E-5	2E-7	-	-
			St wall					
			(6E+4)	-	-	-	9E-4	9E-3
		W, oxides, hydroxides, carbides, halides, and nitrates	-	2E+5	8E-5	3E-7	-	-
31	Gallium-66	D, see ^{65}Ga	1E+3	4E+3	1E-6	5E-9	1E-5	1E-4
		W, see ^{65}Ga	-	3E+3	1E-6	4E-9	-	-
31	Gallium-67	D, see ^{65}Ga	7E+3	1E+4	6E-6	2E-8	1E-4	1E-3
		W, see ^{65}Ga	-	1E+4	4E-6	1E-8	-	-
31	Gallium-68[2]	D, see ^{65}Ga	2E+4	4E+4	2E-5	6E-8	2E-4	2E-3
		W, see ^{65}Ga	-	5E+4	2E-5	7E-8	-	-
31	Gallium-70[2]	D, see ^{65}Ga	5E+4	2E+5	7E-5	2E-7	-	-
			St wall					
			(7E+4)	-	-	-	1E-3	1E-2
		W, see ^{65}Ga	-	2E+5	8E-5	3E-7	-	-
31	Gallium-72	D, see ^{65}Ga	1E+3	4E+3	1E-6	5E-9	2E-5	2E-4
		W, see ^{65}Ga	-	3E+3	1E-6	4E-9	-	-
31	Gallium-73	D, see ^{65}Ga	5E+3	2E+4	6E-6	2E-8	7E-5	7E-4
		W, see ^{65}Ga	-	2E+4	6E-6	2E-8	-	-
32	Germanium-66	D, all compounds except those given for W	2E+4	3E+4	1E-5	4E-8	3E-4	3E-3
		W, oxides, sulfides, and halides	-	2E+4	8E-6	3E-8	-	-
32	Germanium-67[2]	D, see ^{66}Ge	3E+4	9E+4	4E-5	1E-7	-	-
			St wall					
			(4E+4)	-	-	-	6E-4	6E-3
		W, see ^{66}Ge	-	1E+5	4E-5	1E-7	-	-
32	Germanium-68	D, see ^{66}Ge	5E+3	4E+3	2E-6	5E-9	6E-5	6E-4
		W, see ^{66}Ge	-	1E+2	4E-8	1E-10	-	-
32	Germanium-69	D, see ^{66}Ge	1E+4	2E+4	6E-6	2E-8	2E-4	2E-3
		W, see ^{66}Ge	-	8E+3	3E-6	1E-8	-	-

			Table I Occupational Values			Table II Effluent Concentrations		Table III Releases to Sewers
			Col. 1	Col. 2	Col. 3	Col. 1	Col. 2	
			Oral Ingestion	INHALATION				Monthly Average
Atomic Radio-nuclide No.		Class	ALI (μCi)	ALI (μCi)	DAC (μCi/ml)	Air (μCi/ml)	Water (μCi/ml)	Concentration (μCi/ml)
32	Germanium-71	D, see ^{66}Ge	5E+5	4E+5	2E-4	6E-7	7E-3	7E-2
		W, see ^{66}Ge	-	4E+4	2E-5	6E-8	-	-
32	Germanium-75[2]	D, see ^{66}Ge	4E+4	8E+4	3E-5	1E-7	-	-
			St wall					
			(7E+4)	-	-	-	9E-4	9E-3
		W, see ^{66}Ge	-	8E+4	4E-5	1E-7	-	-
32	Germanium-77	D, see ^{66}Ge	9E+3	1E+4	4E-6	1E-8	1E-4	1E-3
		W, see ^{66}Ge	-	6E+3	2E-6	8E-9	-	-
32	Germanium-78[2]	D, see ^{66}Ge	2E+4	2E+4	9E-6	3E-8	-	-
			St wall					
			(2E+4)	-	-	-	3E-4	3E-3
		W, see ^{66}Ge	-	2E+4	9E-6	3E-8	-	-
33	Arsenic-69[2]	W, all compounds	3E+4	1E+5	5E-5	2E-7	-	-
			St wall					
			(4E+4)	-	-	-	6E-4	6E-3
33	Arsenic-70[2]	W, all compounds	1E+4	5E+4	2E-5	7E-8	2E-4	2E-3
33	Arsenic-71	W, all compounds	4E+3	5E+3	2E-6	6E-9	5E-5	5E-4
33	Arsenic-72	W, all compounds	9E+2	1E+3	6E-7	2E-9	1E-5	1E-4
33	Arsenic-73	W, all compounds	8E+3	2E+3	7E-7	2E-9	1E-4	1E-3
33	Arsenic-74	W, all compounds	1E+3	8E+2	3E-7	1E-9	2E-5	2E-4
33	Arsenic-76	W, all compounds	1E+3	1E+3	6E-7	2E-9	1E-5	1E-4
33	Arsenic-77	W, all compounds	4E+3	5E+3	2E-6	7E-9	-	-
			LLI wall					
			(5E+3)	-	-	-	6E-5	6E-4
33	Arsenic-78[2]	W, all compounds	8E+3	2E+4	9E-6	3E-8	1E-4	1E-3
34	Selenium-70[2]	D, all compounds except those given for W	2E+4	4E+4	2E-5	5E-8	1E-4	1E-3
		W, oxides, hydroxides, carbides, and elemental Se	1E+4	4E+4	2E-5	6E-8	-	-
34	Selenium-73m[2]	D, see ^{70}Se	6E+4	2E+5	6E-5	2E-7	4E-4	4E-3
		W, see ^{70}Se	3E+4	1E+5	6E-5	2E-7	-	-
34	Selenium-73	D, see ^{70}Se	3E+3	1E+4	5E-6	2E-8	4E-5	4E-4
		W, see ^{70}Se	-	2E+4	7E-6	2E-8	-	-
34	Selenium-75	D, see ^{70}Se	5E+2	7E+2	3E-7	1E-9	7E-6	7E-5
		W, see ^{70}Se	-	6E+2	3E-7	8E-10	-	-
34	Selenium-79	D, see ^{70}Se	6E+2	8E+2	3E-7	1E-9	8E-6	8E-5
		W, see ^{70}Se	-	6E+2	2E-7	8E-10	-	-
34	Selenium-81m[2]	D, see ^{70}Se	4E+4	7E+4	3E-5	9E-8	3E-4	3E-3
		W, see ^{70}Se	2E+4	7E+4	3E-5	1E-7	-	-

			Table I Occupational Values			Table II Effluent Concentrations		Table III Releases to Sewers
			Col. 1	Col. 2	Col. 3	Col. 1	Col. 2	
			Oral Ingestion	INHALATION				Monthly Average
Atomic Radio-nuclide No.		Class	ALI (μCi)	ALI (μCi)	DAC (μCi/ml)	Air (μCi/ml)	Water (μCi/ml)	Concentration (μCi/ml)
34	Selenium-81[2]	D, see ^{70}Se	6E+4	2E+5	9E-5	3E-7	-	-
			St wall					
			(8E+4)	-	-	-	1E-3	1E-2
		W, see ^{70}Se	-	2E+5	1E-4	3E-7	-	-
34	Selenium-83[2]	D, see ^{70}Se	4E+4	1E+5	5E-5	2E-7	4E-4	4E-3
		W, see ^{70}Se	3E+4	1E+5	5E-5	2E-7	-	-
35	Bromine-74m[2]	D, bromides of H, Li, Na, K, Rb, Cs, and Fr	1E+4	4E+4	2E-5	5E-8	-	-
			St wall					
			(2E+4)	-	-	-	3E-4	3E-3
		W, bromides of lanthanides, Be, Mg, Ca, Sr, Ba, Ra, Al, Ga, In, Tl, Ge, Sn, Pb, As, Sb, Bi, Fe, Ru, Os, Co, Rh, Ir, Ni, Pd, Pt, Cu, Ag, Au, Zn, Cd, Hg, Sc, Y, Ti, Zr, Hf, V, Nb, Ta, Mn, Tc, and Re	-	4E+4	2E-5	6E-8	-	-
35	Bromine-74[2]	D, see ^{74m}Br	2E+4	7E+4	3E-5	1E-7	-	-
			St wall					
			(4E+4)	-	-	-	5E-4	5E-3
		W, see ^{74m}Br	-	8E+4	4E-5	1E-7	-	-
35	Bromine-75[2]	D, see ^{74m}Br	3E+4	5E+4	2E-5	7E-8	-	-
			St wall					
			(4E+4)	-	-	-	5E-4	5E-3
		W, see ^{74m}Br	-	5E+4	2E-5	7E-8	-	-
35	Bromine-76	D, see ^{74m}Br	4E+3	5E+3	2E-6	7E-9	5E-5	5E-4
		W, see ^{74m}Br	-	4E+3	2E-6	6E-9	-	-
35	Bromine-77	D, see ^{74m}Br	2E+4	2E+4	1E-5	3E-8	2E-4	2E-3
		W, see ^{74m}Br	-	2E+4	8E-6	3E-8	-	-
35	Bromine-80m	D, see ^{74m}Br	2E+4	2E+4	7E-6	2E-8	3E-4	3E-3
		W, see ^{74m}Br	-	1E+4	6E-6	2E-8	-	-
35	Bromine-80[2]	D, see ^{74m}Br	5E+4	2E+5	8E-5	3E-7	-	-
			St wall					
			(9E+4)	-	-	-	1E-3	1E-2
		W, see ^{74m}Br	-	2E+5	9E-5	3E-7	-	-
35	Bromine-82	D, see ^{74m}Br	3E+3	4E+3	2E-6	6E-9	4E-5	4E-4
		W, see ^{74m}Br	-	4E+3	2E-6	5E-9	-	-
35	Bromine-83	D, see ^{74m}Br	5E+4	6E+4	3E-5	9E-8	-	-
			St wall					
			(7E+4)	-	-	-	9E-4	9E-3
		W, see ^{74m}Br	-	6E+4	3E-5	9E-8	-	-

			Table I Occupational Values			Table II Effluent Concentrations		Table III Releases to Sewers
			Col. 1	Col. 2	Col. 3	Col. 1	Col. 2	
			Oral Ingestion	INHALATION				Monthly Average
Atomic Radio-nuclide No.		Class	ALI (μCi)	ALI (μCi)	DAC (μCi/ml)	Air (μCi/ml)	Water (μCi/ml)	Concentration (μCi/ml)
35	Bromine-84[2]	D, see ^{74m}Br	2E+4	6E+4	2E-5	8E-8	-	-
			St wall					
			(3E+4)	-	-	-	4E-4	4E-3
		W, see ^{74m}Br	-	6E+4	3E-5	9E-8	-	-
36	Krypton-74[2]	Submersion[1]	-	-	3E-6	1E-8	-	-
36	Krypton-76	Submersion[1]	-	-	9E-6	4E-8	-	-
36	Krypton-77[2]	Submersion[1]	-	-	4E-6	2E-8	-	-
36	Krypton-79	Submersion[1]	-	-	2E-5	7E-8	-	-
36	Krypton-81	Submersion[1]	-	-	7E-4	3E-6	-	-
36	Krypton-83m[2]	Submersion[1]	-	-	1E-2	5E-5	-	-
36	Krypton-85m	Submersion[1]	-	-	2E-5	1E-7	-	-
36	Krypton-85	Submersion[1]	-	-	1E-4	7E-7	-	-
36	Krypton-87[2]	Submersion[1]	-	-	5E-6	2E-8	-	-
36	Krypton-88	Submersion[1]	-	-	2E-6	9E-9	-	-
37	Rubidium-79[2]	D, all compounds	4E+4	1E+5	5E-5	2E-7	-	-
			St wall					
			(6E+4)	-	-	-	8E-4	8E-3
37	Rubidium-81m[2]	D, all compounds	2E+5	3E+5	1E-4	5E-7	-	-
			St wall					
			(3E+5)	-	-	-	4E-3	4E-2
37	Rubidium-81	D, all compounds	4E+4	5E+4	2E-5	7E-8	5E-4	5E-3
37	Rubidium-82m	D, all compounds	1E+4	2E+4	7E-6	2E-8	2E-4	2E-3
37	Rubidium-83	D, all compounds	6E+2	1E+3	4E-7	1E-9	9E-6	9E-5
37	Rubidium-84	D, all compounds	5E+2	8E+2	3E-7	1E-9	7E-6	7E-5
37	Rubidium-86	D, all compounds	5E+2	8E+2	3E-7	1E-9	7E-6	7E-5
37	Rubidium-87	D, all compounds	1E+3	2E+3	6E-7	2E-9	1E-5	1E-4
37	Rubidium-88[2]	D, all compounds	2E+4	6E+4	3E-5	9E-8	-	-
			St wall					
			(3E+4)	-	-	-	4E-4	4E-3
37	Rubidium-89[2]	D, all compounds	4E+4	1E+5	6E-5	2E-7	-	-
			St wall					
			(6E+4)	-	-	-	9E-4	9E-3
38	Strontium-80[2]	D, all soluble compounds except SrTiO	4E+3	1E+4	5E-6	2E-8	6E-5	6E-4
		Y, all insoluble compounds and SrTiO	-	1E+4	5E-6	2E-8	-	-
38	Strontium-81[2]	D, see ^{80}Sr	3E+4	8E+4	3E-5	1E-7	3E-4	3E-3
		Y, see ^{80}Sr	2E+4	8E+4	3E-5	1E-7	-	-
38	Strontium-82	D, see ^{80}Sr	3E+2	4E+2	2E-7	6E-10	-	-
			LLI wall					
			(2E+2)	-	-	-	3E-6	3E-5
		Y, see ^{80}Sr	2E+2	9E+1	4E-8	1E-10	-	-

			Table I Occupational Values			Table II Effluent Concentrations		Table III Releases to Sewers
			Col. 1	Col. 2	Col. 3	Col. 1	Col. 2	
			Oral Ingestion	INHALATION				Monthly Average
Atomic Radio-nuclide No.		Class	ALI (μCi)	ALI (μCi)	DAC (μCi/ml)	Air (μCi/ml)	Water (μCi/ml)	Concentration (μCi/ml)
38	Strontium-83	D, see ^{80}Sr	3E+3	7E+3	3E-6	1E-8	3E-5	3E-4
		Y, see ^{80}Sr	2E+3	4E+3	1E-6	5E-9	-	-
38	Strontium-85m[2]	D, see ^{80}Sr	2E+5	6E+5	3E-4	9E-7	3E-3	3E-2
		Y, see ^{80}Sr	-	8E+5	4E-4	1E-6	-	-
38	Strontium-85	D, see ^{80}Sr	3E+3	3E+3	1E-6	4E-9	4E-5	4E-4
		Y, see ^{80}Sr	-	2E+3	6E-7	2E-9	-	-
38	Strontium-87m	D, see ^{80}Sr	5E+4	1E+5	5E-5	2E-7	6E-4	6E-3
		Y, see ^{80}Sr	4E+4	2E+5	6E-5	2E-7	-	-
38	Strontium-89	D, see ^{80}Sr	6E+2	8E+2	4E-7	1E-9	-	-
			LLI wall					
			(6E+2)	-	-	-	8E-6	8E-5
		Y, see ^{80}Sr	5E+2	1E+2	6E-8	2E-10	-	-
38	Strontium-90	D, see ^{80}Sr	3E+1	2E+1	8E-9	-	-	-
			Bone surf	Bone surf				
			(4E+1)	(2E+1)	-	3E-11	5E-7	5E-6
		Y, see ^{80}Sr	-	4E+0	2E-9	6E-12	-	-
38	Strontium-91	D, see ^{80}Sr	2E+3	6E+3	2E-6	8E-9	2E-5	2E-4
		Y, see ^{80}Sr	-	4E+3	1E-6	5E-9	-	-
38	Strontium-92	D, see ^{80}Sr	3E+3	9E+3	4E-6	1E-8	4E-5	4E-4
		Y, see ^{80}Sr	-	7E+3	3E-6	9E-9	-	-
39	Yttrium-86m[2]	W, all compounds except those given for Y	2E+4	6E+4	2E-5	8E-8	3E-4	3E-3
		Y, oxides and hydroxides	-	5E+4	2E-5	8E-8	-	-
39	Yttrium-86	W, see ^{86m}Y	1E+3	3E+3	1E-6	5E-9	2E-5	2E-4
		Y, see ^{86m}Y	-	3E+3	1E-6	5E-9	-	-
39	Yttrium-87	W, see ^{86m}Y	2E+3	3E+3	1E-6	5E-9	3E-5	3E-4
		Y, see ^{86m}Y	-	3E+3	1E-6	5E-9	-	-
39	Yttrium-88	W, see ^{86m}Y	1E+3	3E+2	1E-7	3E-10	1E-5	1E-4
		Y, see ^{86m}Y	-	2E+2	1E-7	3E-10	-	-
39	Yttrium-90m	W, see ^{86m}Y	8E+3	1E+4	5E-6	2E-8	1E-4	1E-3
		Y, see ^{86m}Y	-	1E+4	5E-6	2E-8	-	-
39	Yttrium-90	W, see ^{86m}Y	4E+2	7E+2	3E-7	9E-10	-	-
			LLI wall					
			(5E+2)	-	-	-	7E-6	7E-5
		Y, see ^{86m}Y	-	6E+2	3E-7	9E-10	-	-
39	Yttrium-91m[2]	W, see ^{86m}Y	1E+5	2E+5	1E-4	3E-7	2E-3	2E-2
		Y, see ^{86m}Y	-	2E+5	7E-5	2E-7	-	-
39	Yttrium-91	W, see ^{86m}Y	5E+2	2E+2	7E-8	2E-10	-	-
			LLI wall					
			(6E+2)	-	-	-	8E-6	8E-5
		Y, see ^{86m}Y	-	1E+2	5E-8	2E-10	-	-

			Table I Occupational Values			Table II Effluent Concentrations		Table III Releases to Sewers
			Col. 1	Col. 2	Col. 3	Col. 1	Col. 2	
			Oral Ingestion	INHALATION				Monthly Average
Atomic Radio-nuclide No.		Class	ALI (µCi)	ALI (µCi)	DAC (µCi/ml)	Air (µCi/ml)	Water (µCi/ml)	Concentration (µCi/ml)
39	Yttrium-92	W, see ^{86m}Y	3E+3	9E+3	4E-6	1E-8	4E-5	4E-4
		Y, see ^{86m}Y	-	8E+3	3E-6	1E-8	-	-
39	Yttrium-93	W, see ^{86m}Y	1E+3	3E+3	1E-6	4E-9	2E-5	2E-4
		Y, see ^{86m}Y	-	2E+3	1E-6	3E-9	-	-
39	Yttrium-94[2]	W, see ^{86m}Y	2E+4 St wall	8E+4	3E-5	1E-7	-	-
			(3E+4)	-	-	-	4E-4	4E-3
		Y, see ^{86m}Y	-	8E+4	3E-5	1E-7	-	-
39	Yttrium-95[2]	W, see ^{86m}Y	4E+4 St wall	2E+5	6E-5	2E-7	-	-
			(5E+4)	-	-	-	7E-4	7E-3
		Y, see ^{86m}Y	-	1E+5	6E-5	2E-7	-	-
40	Zirconium-86	D, all compounds except those given for W and Y	1E+3	4E+3	2E-6	6E-9	2E-5	2E-4
		W, oxides, hydroxides, halides, and nitrates	-	3E+3	1E-6	4E-9	-	-
		Y, carbide	-	2E+3	1E-6	3E-9	-	-
40	Zirconium-88	D, see ^{86}Zr	4E+3	2E+2	9E-8	3E-10	5E-5	5E-4
		W, see ^{86}Zr	-	5E+2	2E-7	7E-10	-	-
		Y, see ^{86}Zr	-	3E+2	1E-7	4E-10	-	-
40	Zirconium-89	D, see ^{86}Zr	2E+3	4E+3	1E-6	5E-9	2E-5	2E-4
		W, see ^{86}Zr	-	2E+3	1E-6	3E-9	-	-
		Y, see ^{86}Zr	-	2E+3	1E-6	3E-9	-	-
40	Zirconium-93	D, see ^{86}Zr	1E+3 Bone surf	6E+0 Bone surf	3E-9	-	-	-
			(3E+3)	(2E+1)	-	2E-11	4E-5	4E-4
		W, see ^{86}Zr	-	2E+1 Bone surf	1E-8	-	-	-
			-	(6E+1)	-	9E-11	-	-
		Y, see ^{86}Zr	-	6E+1 Bone surf	2E-8	-	-	-
			-	(7E+1)	-	9E-11	-	-
40	Zirconium-95	D, see ^{86}Zr	1E+3	1E+2 Bone surf	5E-8	-	2E-5	2E-4
			-	(3E+2)	-	4E-10	-	-
		W, see ^{86}Zr	-	4E+2	2E-7	5E-10	-	-
		Y, see ^{86}Zr	-	3E+2	1E-7	4E-10	-	-
40	Zirconium-97	D, see ^{86}Zr	6E+2	2E+3	8E-7	3E-9	9E-6	9E-5
		W, see ^{86}Zr	-	1E+3	6E-7	2E-9	-	-
		Y, see ^{86}Zr	-	1E+3	5E-7	2E-9	-	-

			Table I Occupational Values			Table II Effluent Concentrations		Table III Releases to Sewers
			Col. 1	Col. 2	Col. 3	Col. 1	Col. 2	
			Oral Ingestion	INHALATION				Monthly Average
Atomic Radio-nuclide No.		Class	ALI (μCi)	ALI (μCi)	DAC (μCi/ml)	Air (μCi/ml)	Water (μCi/ml)	Concentration (μCi/ml)
41	Niobium-88[2]	W, all compounds except those given for Y	5E+4	2E+5	9E-5	3E-7	-	-
			St wall (7E+4)	-	-	-	1E-3	1E-2
		Y, oxides and hydroxides	-	2E+5	9E-5	3E-7	-	-
41	Niobium-89[2]	W, see ^{88}Nb	1E+4	4E+4	2E-5	6E-8	1E-4	1E-3
	(66 min)	Y, see ^{88}Nb	-	4E+4	2E-5	5E-8	-	-
41	Niobium-89	W, see ^{88}Nb	5E+3	2E+4	8E-6	3E-8	7E-5	7E-4
	(122 min)	Y, see ^{88}Nb	-	2E+4	6E-6	2E-8	-	-
41	Niobium-90	W, see ^{88}Nb	1E+3	3E+3	1E-6	4E-9	1E-5	1E-4
		Y, see ^{88}Nb	-	2E+3	1E-6	3E-9	-	-
41	Niobium-93m	W, see ^{88}Nb	9E+3	2E+3	8E-7	3E-9	-	-
			LLI wall (1E+4)	-	-	-	2E-4	2E-3
		Y, see ^{88}Nb	-	2E+2	7E-8	2E-10	-	-
41	Niobium-94	W, see ^{88}Nb	9E+2	2E+2	8E-8	3E-10	1E-5	1E-4
		Y, see ^{88}Nb	-	2E+1	6E-9	2E-11	-	-
41	Niobium-95m	W, see ^{88}Nb	2E+3	3E+3	1E-6	4E-9	-	-
			LLI wall (2E+3)	-	-	-	3E-5	3E-4
		Y, see ^{88}Nb	-	2E+3	9E-7	3E-9	-	-
41	Niobium-95	W, see ^{88}Nb	2E+3	1E+3	5E-7	2E-9	3E-5	3E-4
		Y, see ^{88}Nb	-	1E+3	5E-7	2E-9	-	-
41	Niobium-96	W, see ^{88}Nb	1E+3	3E+3	1E-6	4E-9	2E-5	2E-4
		Y, see ^{88}Nb	-	2E+3	1E-6	3E-9	-	-
41	Niobium-97[2]	W, see ^{88}Nb	2E+4	8E+4	3E-5	1E-7	3E-4	3E-3
		Y, see ^{88}Nb	-	7E+4	3E-5	1E-7	-	-
41	Niobium-98[2]	W, see ^{88}Nb	1E+4	5E+4	2E-5	8E-8	2E-4	2E-3
		Y, see ^{88}Nb	-	5E+4	2E-5	7E-8	-	-
42	Molybdenum-90	D, all compounds except those given for Y	4E+3	7E+3	3E-6	1E-8	3E-5	3E-4
		Y, oxides, hydroxides, and MoS	2E+3	5E+3	2E-6	6E-9	-	-
42	Molybdenum-93m	D, see ^{90}Mo	9E+3	2E+4	7E-6	2E-8	6E-5	6E-4
		Y, see ^{90}Mo	4E+3	1E+4	6E-6	2E-8	-	-
42	Molybdenum-93	D, see ^{90}Mo	4E+3	5E+3	2E-6	8E-9	5E-5	5E-4
		Y, see ^{90}Mo	2E+4	2E+2	8E-8	2E-10	-	-
42	Molybdenum-99	D, see ^{90}Mo	2E+3	3E+3	1E-6	4E-9	-	-
			LLI wall (1E+3)	-	-	-	2E-5	2E-4
		Y, see ^{90}Mo	1E+3	1E+3	6E-7	2E-9	-	-

		Table I Occupational Values			Table II Effluent Concentrations		Table III Releases to Sewers
		Col. 1	Col. 2	Col. 3	Col. 1	Col. 2	
		Oral Ingestion	INHALATION				Monthly Average
Atomic Radio-nuclide No.	Class	ALI (μCi)	ALI (μCi)	DAC (μCi/ml)	Air (μCi/ml)	Water (μCi/ml)	Concentration (μCi/ml)
42 Molybdenum-101[2]	D, see ^{90}Mo	4E+4	1E+5	6E-5	2E-7	-	-
		St wall (5E+4)	-	-	-	7E-4	7E-3
	Y, see ^{90}Mo	-	1E+5	6E-5	2E-7	-	-
43 Technetium-93m[2]	D, all compounds except those given for W	7E+4	2E+5	6E-5	2E-7	1E-3	1E-2
	W, oxides, hydroxides, halides, and nitrates	-	3E+5	1E-4	4E-7	-	-
43 Technetium-93	D, see ^{93m}Tc	3E+4	7E+4	3E-5	1E-7	4E-4	4E-3
	W, see ^{93m}Tc	-	1E+5	4E-5	1E-7	-	-
43 Technetium-94m[2]	D, see ^{93m}Tc	2E+4	4E+4	2E-5	6E-8	3E-4	3E-3
	W, see ^{93m}Tc	-	6E+4	2E-5	8E-8	-	-
43 Technetium-94	D, see ^{93m}Tc	9E+3	2E+4	8E-6	3E-8	1E-4	1E-3
	W, see ^{93m}Tc	-	2E+4	1E-5	3E-8	-	-
43 Technetium-95m	D, see ^{93m}Tc	4E+3	5E+3	2E-6	8E-9	5E-5	5E-4
	W, see ^{93m}Tc	-	2E+3	8E-7	3E-9	-	-
43 Technetium-95	D, see ^{93m}Tc	1E+4	2E+4	9E-6	3E-8	1E-4	1E-3
	W, see ^{93m}Tc	-	2E+4	8E-6	3E-8	-	-
43 Technetium-96m[2]	D, see ^{93m}Tc	2E+5	3E+5	1E-4	4E-7	2E-3	2E-2
	W, see ^{93m}Tc	-	2E+5	1E-4	3E-7	-	-
43 Technetium-96	D, see ^{93m}Tc	2E+3	3E+3	1E-6	5E-9	3E-5	3E-4
	W, see ^{93m}Tc	-	2E+3	9E-7	3E-9	-	-
43 Technetium-97m	D, see ^{93m}Tc	5E+3	7E+3	3E-6	-	6E-5	6E-4
		St wall (7E+3)	-	1E-8	-	-	-
	W, see ^{93m}Tc	-	1E+3	5E-7	2E-9	-	-
43 Technetium-97	D, see ^{93m}Tc	4E+4	5E+4	2E-5	7E-8	5E-4	5E-3
	W, see ^{93m}Tc	-	6E+3	2E-6	8E-9	-	-
43 Technetium-98	D, see ^{93m}Tc	1E+3	2E+3	7E-7	2E-9	1E-5	1E-4
	W, see ^{93m}Tc	-	3E+2	1E-7	4E-10	-	-
43 Technetium-99m	D, see ^{93m}Tc	8E+4	2E+5	6E-5	2E-7	1E-3	1E-2
	W, see ^{93m}Tc	-	2E+5	1E-4	3E-7	-	-
43 Technetium-99	D, see ^{93m}Tc	4E+3	5E+3	2E-6	-	6E-5	6E-4
		St wall (6E+3)	-	8E-9	-	-	-
	W, see ^{93m}Tc	-	7E+2	3E-7	9E-10	-	-
43 Technetium-101[2]	D, see ^{93m}Tc	9E+4	3E+5	1E-4	5E-7	-	-
		St wall (1E+5)	-	-	-	2E-3	2E-2
	W, see ^{93m}Tc	-	4E+5	2E-4	5E-7	-	-

			Table I Occupational Values			Table II Effluent Concentrations		Table III Releases to Sewers
			Col. 1	Col. 2	Col. 3	Col. 1	Col. 2	
			Oral Ingestion	INHALATION				Monthly Average
Atomic Radio-nuclide No.		Class	ALI (µCi)	ALI (µCi)	DAC (µCi/ml)	Air (µCi/ml)	Water (µCi/ml)	Concentration (µCi/ml)
43	Technetium-104[2]	D, see ^{93m}Tc	2E+4	7E+4	3E-5	1E-7	-	-
			St wall					
			(3E+4)	-	-	-	4E-4	4E-3
		W, see ^{93m}Tc	-	9E+4	4E-5	1E-7	-	-
44	Ruthenium-94[2]	D, all compounds except those given for W and Y	2E+4	4E+4	2E-5	6E-8	2E-4	2E-3
		W, halides	-	6E+4	3E-5	9E-8	-	-
		Y, oxides and hydroxides	-	6E+4	2E-5	8E-8	-	-
44	Ruthenium-97	D, see ^{94}Ru	8E+3	2E+4	8E-6	3E-8	1E-4	1E-3
		W, see ^{94}Ru	-	1E+4	5E-6	2E-8	-	-
		Y, see ^{94}Ru	-	1E+4	5E-6	2E-8	-	-
44	Ruthenium-103	D, see ^{94}Ru	2E+3	2E+3	7E-7	2E-9	3E-5	3E-4
		W, see ^{94}Ru	-	1E+3	4E-7	1E-9	-	-
		Y, see ^{94}Ru	-	6E+2	3E-7	9E-10	-	-
44	Ruthenium-105	D, see ^{94}Ru	5E+3	1E+4	6E-6	2E-8	7E-5	7E-4
		W, see ^{94}Ru	-	1E+4	6E-6	2E-8	-	-
		Y, see ^{94}Ru	-	1E+4	5E-6	2E-8	-	-
44	Ruthenium-106	D, see ^{94}Ru	2E+2	9E+1	4E-8	1E-10	-	-
			LLI wall					
			(2E+2)	-	-	-	3E-6	3E-5
		W, see ^{94}Ru	-	5E+1	2E-8	8E-11	-	-
		Y, see ^{94}Ru	-	1E+1	5E-9	2E-11	-	-
45	Rhodium-99m	D, all compounds except those given for W and Y	2E+4	6E+4	2E-5	8E-8	2E-4	2E-3
		W, halides	-	8E+4	3E-5	1E-7	-	-
		Y, oxides and hydroxides	-	7E+4	3E-5	9E-8	-	-
45	Rhodium-99	D, see ^{99m}Rh	2E+3	3E+3	1E-6	4E-9	3E-5	3E-4
		W, see ^{99m}Rh	-	2E+3	9E-7	3E-9	-	-
		Y, see ^{99m}Rh	-	2E+3	8E-7	3E-9	-	-
45	Rhodium-100	D, see ^{99m}Rh	2E+3	5E+3	2E-6	7E-9	2E-5	2E-4
		W, see ^{99m}Rh	-	4E+3	2E-6	6E-9	-	-
		Y, see ^{99m}Rh	-	4E+3	2E-6	5E-9	-	-
45	Rhodium-101m	D, see ^{99m}Rh	6E+3	1E+4	5E-6	2E-8	8E-5	8E-4
		W, see ^{99m}Rh	-	8E+3	4E-6	1E-8	-	-
		Y, see ^{99m}Rh	-	8E+3	3E-6	1E-8	-	-
45	Rhodium-101	D, see ^{99m}Rh	2E+3	5E+2	2E-7	7E-10	3E-5	3E-4
		W, see ^{99m}Rh	-	8E+2	3E-7	1E-9	-	-
		Y, see ^{99m}Rh	-	2E+2	6E-8	2E-10	-	-

			Table I Occupational Values			Table II Effluent Concentrations		Table III Releases to Sewers
			Col. 1	Col. 2	Col. 3	Col. 1	Col. 2	
			Oral Ingestion	INHALATION				Monthly Average
Atomic Radio-nuclide No.		Class	ALI (µCi)	ALI (µCi)	DAC (µCi/ml)	Air (µCi/ml)	Water (µCi/ml)	Concentration (µCi/ml)
45	Rhodium-102m	D, see ^{99m}Rh	1E+3	5E+2	2E-7	7E-10	-	-
			LLI wall					
			(1E+3)	-	-	-	2E-5	2E-4
		W, see ^{99m}Rh	-	4E+2	2E-7	5E-10	-	-
		Y, see ^{99m}Rh	-	1E+2	5E-8	2E-10	-	-
45	Rhodium-102	D, see ^{99m}Rh	6E+2	9E+1	4E-8	1E-10	8E-6	8E-5
		W, see ^{99m}Rh	-	2E+2	7E-8	2E-10	-	-
		Y, see ^{99m}Rh	-	6E+1	2E-8	8E-11	-	-
45	Rhodium-103m[2]	D, see ^{99m}Rh	4E+5	1E+6	5E-4	2E-6	6E-3	6E-2
		W, see ^{99m}Rh	-	1E+6	5E-4	2E-6	-	-
		Y, see ^{99m}Rh	-	1E+6	5E-4	2E-6	-	-
45	Rhodium-105	D, see ^{99m}Rh	4E+3	1E+4	5E-6	2E-8	-	-
			LLI wall					
			(4E+3)	-	-	-	5E-5	5E-4
		W, see ^{99m}Rh	-	6E+3	3E-6	9E-9	-	-
		Y, see ^{99m}Rh	-	6E+3	2E-6	8E-9	-	-
45	Rhodium-106m	D, see ^{99m}Rh	8E+3	3E+4	1E-5	4E-8	1E-4	1E-3
		W, see ^{99m}Rh	-	4E+4	2E-5	5E-8	-	-
		Y, see ^{99m}Rh	-	4E+4	1E-5	5E-8	-	-
45	Rhodium-107[2]	D, see ^{99m}Rh	7E+4	2E+5	1E-4	3E-7	-	-
			St wall					
			(9E+4)	-	-	-	1E-3	1E-2
		W, see ^{99m}Rh	-	3E+5	1E-4	4E-7	-	-
		Y, see ^{99m}Rh	-	3E+5	1E-4	3E-7	-	-
46	Palladium-100	D, all compounds except those given for W and Y	1E+3	1E+3	6E-7	2E-9	2E-5	2E-4
		W, nitrates	-	1E+3	5E-7	2E-9	-	-
		Y, oxides and hydroxides	-	1E+3	6E-7	2E-9	-	-
46	Palladium-101	D, see ^{100}Pd	1E+4	3E+4	1E-5	5E-8	2E-4	2E-3
		W, see ^{100}Pd	-	3E+4	1E-5	5E-8	-	-
		Y, see ^{100}Pd	-	3E+4	1E-5	4E-8	-	-
46	Palladium-103	D, see ^{100}Pd	6E+3	6E+3	3E-6	9E-9	-	-
			LLI wall					
			(7E+3)	-	-	-	1E-4	1E-3
		W, see ^{100}Pd	-	4E+3	2E-6	6E-9	-	-
		Y, see ^{100}Pd	-	4E+3	1E-6	5E-9	-	-
46	Palladium-107	D, see ^{100}Pd	3E+4 LLI wall	2E+4 Kidneys	9E-6	-	-	-
			(4E+4)	(2E+4)	-	3E-8	5E-4	5E-3
		W, see ^{100}Pd	-	7E+3	3E-6	1E-8	-	-
		Y, see ^{100}Pd	-	4E+2	2E-7	6E-10	-	-

			Table I Occupational Values			Table II Effluent Concentrations		Table III Releases to Sewers
			Col. 1	Col. 2	Col. 3	Col. 1	Col. 2	
			Oral Ingestion	INHALATION				Monthly Average
Atomic Radio-nuclide No.		Class	ALI (μCi)	ALI (μCi)	DAC (μCi/ml)	Air (μCi/ml)	Water (μCi/ml)	Concentration (μCi/ml)
46	Palladium-109	D, see ^{100}Pd	2E+3	6E+3	3E-6	9E-9	3E-5	3E-4
		W, see ^{100}Pd	-	5E+3	2E-6	8E-9	-	-
		Y, see ^{100}Pd	-	5E+3	2E-6	6E-9	-	-
47	Silver-102[2]	D, all compounds except those given for W and Y	5E+4 St wall	2E+5	8E-5	2E-7	-	-
			(6E+4)	-	-	-	9E-4	9E-3
		W, nitrates and sulfides	-	2E+5	9E-5	3E-7	-	-
		Y, oxides and hydroxides	-	2E+5	8E-5	3E-7	-	-
47	Silver-103[2]	D, see ^{102}Ag	4E+4	1E+5	4E-5	1E-7	5E-4	5E-3
		W, see ^{102}Ag	-	1E+5	5E-5	2E-7	-	-
		Y, see ^{102}Ag	-	1E+5	5E-5	2E-7	-	-
47	Silver-104m[2]	D, see ^{102}Ag	3E+4	9E+4	4E-5	1E-7	4E-4	4E-3
		W, see ^{102}Ag	-	1E+5	5E-5	2E-7	-	-
		Y, see ^{102}Ag	-	1E+5	5E-5	2E-7	-	-
47	Silver-104[2]	D, see ^{102}Ag	2E+4	7E+4	3E-5	1E-7	3E-4	3E-3
		W, see ^{102}Ag	-	1E+5	6E-5	2E-7	-	-
		Y, see ^{102}Ag	-	1E+5	6E-5	2E-7	-	-
47	Silver-105	D, see ^{102}Ag	3E+3	1E+3	4E-7	1E-9	4E-5	4E-4
		W, see ^{102}Ag	-	2E+3	7E-7	2E-9	-	-
		Y, see ^{102}Ag	-	2E+3	7E-7	2E-9	-	-
47	Silver-106m	D, see ^{102}Ag	8E+2	7E+2	3E-7	1E-9	1E-5	1E-4
		W, see ^{102}Ag	-	9E+2	4E-7	1E-9	-	-
		Y, see ^{102}Ag	-	9E+2	4E-7	1E-9	-	-
47	Silver-106[2]	D, see ^{102}Ag	6E+4 St wall	2E+5	8E-5	3E-7	-	-
			(6E+4)	-	-	-	9E-4	9E-3
		W, see ^{102}Ag	-	2E+5	9E-5	3E-7	-	-
		Y, see ^{102}Ag	-	2E+5	8E-5	3E-7	-	-
47	Silver-108m	D, see ^{102}Ag	6E+2	2E+2	8E-8	3E-10	9E-6	9E-5
		W, see ^{102}Ag	-	3E+2	1E-7	4E-10	-	-
		Y, see ^{102}Ag	-	2E+1	1E-8	3E-11	-	-
47	Silver-110m	D, see ^{102}Ag	5E+2	1E+2	5E-8	2E-10	6E-6	6E-5
		W, see ^{102}Ag	-	2E+2	8E-8	3E-10	-	-
		Y, see ^{102}Ag	-	9E+1	4E-8	1E-10	-	-
47	Silver-111	D, see ^{102}Ag	9E+2 LLI wall	2E+3 Liver	6E-7	-	-	-
			(1E+3)	(2E+3)	-	2E-9	2E-5	2E-4
		W, see ^{102}Ag	-	9E+2	4E-7	1E-9	-	-
		Y, see ^{102}Ag	-	9E+2	4E-7	1E-9	-	-

			Table I Occupational Values			Table II Effluent Concentrations		Table III Releases to Sewers
			Col. 1	Col. 2	Col. 3	Col. 1	Col. 2	
			Oral Ingestion	INHALATION				Monthly Average
Atomic Radio-nuclide No.		Class	ALI (μCi)	ALI (μCi)	DAC (μCi/ml)	Air (μCi/ml)	Water (μCi/ml)	Concentration (μCi/ml)
47	Silver-112	D, see ^{102}Ag	3E+3	8E+3	3E-6	1E-8	4E-5	4E-4
		W, see ^{102}Ag	-	1E+4	4E-6	1E-8	-	-
		Y, see ^{102}Ag	-	9E+3	4E-6	1E-8	-	-
47	Silver-115[2]	D, see ^{102}Ag	3E+4 St wall	9E+4	4E-5	1E-7	-	-
			(3E+4)	-	-	-	4E-4	4E-3
		W, see ^{102}Ag	-	9E+4	4E-5	1E-7	-	-
		Y, see ^{102}Ag	-	8E+4	3E-5	1E-7	-	-
48	Cadmium-104[2]	D, all compounds except those given for W and Y	2E+4	7E+4	3E-5	9E-8	3E-4	3E-3
		W, sulfides, halides, and nitrates	-	1E+5	5E-5	2E-7	-	-
		Y, oxides and hydroxides	-	1E+5	5E-5	2E-7	-	-
48	Cadmium-107	D, see ^{104}Cd	2E+4	5E+4	2E-5	8E-8	3E-4	3E-3
		W, see ^{104}Cd	-	6E+4	2E-5	8E-8	-	-
		Y, see ^{104}Cd	-	5E+4	2E-5	7E-8	-	-
48	Cadmium-109	D, see ^{104}Cd	3E+2	4E+1	1E-8	-	-	-
			Kidneys	Kidneys				
			(4E+2)	(5E+1)	-	7E-11	6E-6	6E-5
		W, see ^{104}Cd	-	1E+2 Kidneys	5E-8	-	-	-
			-	(1E+2)	-	2E-10	-	-
		Y, see ^{104}Cd	-	1E+2	5E-8	2E-10	-	-
48	Cadmium-113m	D, see ^{104}Cd	2E+1	2E+0	1E-9	-	-	-
			Kidneys	Kidneys				
			(4E+1)	(4E+0)	-	5E-12	5E-7	5E-6
		W, see ^{104}Cd	-	8E+0	4E-9	-	-	-
				Kidneys				
			-	(1E+1)	-	2E-11	-	-
		Y, see ^{104}Cd	-	1E+1	5E-9	2E-11	-	-
48	Cadmium-113	D, see ^{104}Cd	2E+1	2E+0	9E-10	-	-	-
			Kidneys	Kidneys				
			(3E+1)	(3E+0)	-	5E-12	4E-7	4E-6
		W, see ^{104}Cd	-	8E+0 Kidneys	3E-9	-	-	-
			-	(1E+1)	-	2E-11	-	-
		Y, see ^{104}Cd	-	1E+1	6E-9	2E-11	-	-
48	Cadmium-115m	D, see ^{104}Cd	3E+2	5E+1 Kidneys	2E-8	-	4E-6	4E-5
			-	(8E+1)	-	1E-10	-	-
		W, see ^{104}Cd	-	1E+2	5E-8	2E-10	-	-
		Y, see ^{104}Cd	-	1E+2	6E-8	2E-10	-	-

			Table I Occupational Values			Table II Effluent Concentrations		Table III Releases to Sewers
			Col. 1	Col. 2	Col. 3	Col. 1	Col. 2	
			Oral Ingestion	INHALATION				Monthly Average
Atomic Radio-nuclide No.		Class	ALI (μCi)	ALI (μCi)	DAC (μCi/ml)	Air (μCi/ml)	Water (μCi/ml)	Concentration (μCi/ml)
48	Cadmium-115	D, see ^{104}Cd	9E+2 LLI wall	1E+3	6E-7	2E-9	-	-
			(1E+3)	-	-	-	1E-5	1E-4
		W, see ^{104}Cd	-	1E+3	5E-7	2E-9	-	-
		Y, see ^{104}Cd	-	1E+3	6E-7	2E-9	-	-
48	Cadmium-117m	D, see ^{104}Cd	5E+3	1E+4	5E-6	2E-8	6E-5	6E-4
		W, see ^{104}Cd	-	2E+4	7E-6	2E-8	-	-
		Y, see ^{104}Cd	-	1E+4	6E-6	2E-8	-	-
48	Cadmium-117	D, see ^{104}Cd	5E+3	1E+4	5E-6	2E-8	6E-5	6E-4
		W, see ^{104}Cd	-	2E+4	7E-6	2E-8	-	-
		Y, see ^{104}Cd	-	1E+4	6E-6	2E-8	-	-
49	Indium-109	D, all compounds except those given for W	2E+4	4E+4	2E-5	6E-8	3E-4	3E-3
		W, oxides, hydroxides, halides, and nitrates	-	6E+4	3E-5	9E-8	-	-
49	Indium-110[2]	D, see ^{109}In	2E+4	4E+4	2E-5	6E-8	2E-4	2E-3
	(69.1 min)	W, see ^{109}In	-	6E+4	2E-5	8E-8	-	-
49	Indium-110	D, see ^{109}In	5E+3	2E+4	7E-6	2E-8	7E-5	7E-4
	(4.9 h)	W, see ^{109}In	-	2E+4	8E-6	3E-8	-	-
49	Indium-111	D, see ^{109}In	4E+3	6E+3	3E-6	9E-9	6E-5	6E-4
		W, see ^{109}In	-	6E+3	3E-6	9E-9	-	-
49	Indium-112[2]	D, see ^{109}In	2E+5	6E+5	3E-4	9E-7	2E-3	2E-2
		W, see ^{109}In	-	7E+5	3E-4	1E-6	-	-
49	Indium-113m[2]	D, see ^{109}In	5E+4	1E+5	6E-5	2E-7	7E-4	7E-3
		W, see ^{109}In	-	2E+5	8E-5	3E-7	-	-
49	Indium-114m	D, see ^{109}In	3E+2 LLI wall	6E+1	3E-8	9E-11	-	-
			(4E+2)	-	-	-	5E-6	5E-5
		W, see ^{109}In	-	1E+2	4E-8	1E-10	-	-
49	Indium-115m	D, see ^{109}In	1E+4	4E+4	2E-5	6E-8	2E-4	2E-3
		W, see ^{109}In	-	5E+4	2E-5	7E-8	-	-
49	Indium-115	D, see ^{109}In	4E+1	1E+0	6E-10	2E-12	5E-7	5E-6
		W, see ^{109}In	-	5E+0	2E-9	8E-12	-	-
49	Indium-116m[2]	D, see ^{109}In	2E+4	8E+4	3E-5	1E-7	3E-4	3E-3
		W, see ^{109}In	-	1E+5	5E-5	2E-7	-	-
49	Indium-117m[2]	D, see ^{109}In	1E+4	3E+4	1E-5	5E-8	2E-4	2E-3
		W, see ^{109}In	-	4E+4	2E-5	6E-8	-	-
49	Indium-117[2]	D, see ^{109}In	6E+4	2E+5	7E-5	2E-7	8E-4	8E-3
		W, see ^{109}In	-	2E+5	9E-5	3E-7	-	-
49	Indium-119m[2]	D, see ^{109}In	4E+4 St wall	1E+5	5E-5	2E-7	-	-
			(5E+4)	-	-	-	7E-4	7E-3
		W, see ^{109}In	-	1E+5	6E-5	2E-7	-	-

			Table I Occupational Values			Table II Effluent Concentrations		Table III Releases to Sewers
			Col. 1	Col. 2	Col. 3	Col. 1	Col. 2	
			Oral Ingestion	INHALATION				Monthly Average
Atomic Radio-nuclide No.		Class	ALI (μCi)	ALI (μCi)	DAC (μCi/ml)	Air (μCi/ml)	Water (μCi/ml)	Concentration (μCi/ml)
50	Tin-110	D, all compounds except those given for W	4E+3	1E+4	5E-6	2E-8	5E-5	5E-4
		W, sulfides, oxides, hydroxides, halides, nitrates, and stannic phosphate	-	1E+4	5E-6	2E-8	-	-
50	Tin-111[2]	D, see ^{110}Sn	7E+4	2E+5	9E-5	3E-7	1E-3	1E-2
		W, see ^{110}Sn	-	3E+5	1E-4	4E-7	-	-
50	Tin-113	D, see ^{110}Sn	2E+3	1E+3	5E-7	2E-9	-	-
			LLI wall					
			(2E+3)	-	-	-	3E-5	3E-4
		W, see ^{110}Sn	-	5E+2	2E-7	8E-10	-	-
50	Tin-117m	D, see ^{110}Sn	2E+3	1E+3	5E-7	-	-	-
			LLI wall	Bone surf				
			(2E+3)	(2E+3)	-	3E-9	3E-5	3E-4
		W, see ^{110}Sn	-	1E+3	6E-7	2E-9	-	-
50	Tin-119m	D, see ^{110}Sn	3E+3	2E+3	1E-6	3E-9	-	-
			LLI wall					
			(4E+3)	-	-	-	6E-5	6E-4
		W, see ^{110}Sn	-	1E+3	4E-7	1E-9	-	-
50	Tin-121m	D, see ^{110}Sn	3E+3	9E+2	4E-7	1E-9	-	-
			LLI wall					
			(4E+3)	-	-	-	5E-5	5E-4
		W, see ^{110}Sn	-	5E+2	2E-7	8E-10	-	-
50	Tin-121	D, see ^{110}Sn	6E+3	2E+4	6E-6	2E-8	-	-
			LLI wall					
			(6E+3)	-	-	-	8E-5	8E-4
		W, see ^{110}Sn	-	1E+4	5E-6	2E-8	-	-
50	Tin-123m[2]	D, see ^{110}Sn	5E+4	1E+5	5E-5	2E-7	7E-4	7E-3
		W, see ^{110}Sn	-	1E+5	6E-5	2E-7	-	-
50	Tin-123	D, see ^{110}Sn	5E+2	6E+2	3E-7	9E-10	-	-
			LLI wall					
			(6E+2)	-	-	-	9E-6	9E-5
		W, see ^{110}Sn	-	2E+2	7E-8	2E-10	-	-
50	Tin-125	D, see ^{110}Sn	4E+2	9E+2	4E-7	1E-9	-	-
			LLI wall					
			(5E+2)	-	-	-	6E-6	6E-5
		W, see ^{110}Sn	-	4E+2	1E-7	5E-10	-	-
50	Tin-126	D, see ^{110}Sn	3E+2	6E+1	2E-8	8E-11	4E-6	4E-5
		W, see ^{110}Sn	-	7E+1	3E-8	9E-11	-	-
50	Tin-127	D, see ^{110}Sn	7E+3	2E+4	8E-6	3E-8	9E-5	9E-4
		W, see ^{110}Sn	-	2E+4	8E-6	3E-8	-	-
50	Tin-128[2]	D, see ^{110}Sn	9E+3	3E+4	1E-5	4E-8	1E-4	1E-3
		W, see ^{110}Sn	-	4E+4	1E-5	5E-8	-	-

			Table I Occupational Values			Table II Effluent Concentrations		Table III Releases to Sewers
			Col. 1	Col. 2	Col. 3	Col. 1	Col. 2	
			Oral Ingestion	INHALATION				Monthly Average
Atomic Radio-nuclide No.		Class	ALI (μCi)	ALI (μCi)	DAC (μCi/ml)	Air (μCi/ml)	Water (μCi/ml)	Concentration (μCi/ml)
51	Antimony-115[2]	D, all compounds except those given for W	8E+4	2E+5	1E-4	3E-7	1E-3	1E-2
		W, oxides, hydroxides, halides, sulfides, sulfates, and nitrates	-	3E+5	1E-4	4E-7	-	-
51	Antimony-116m[2]	D, see ^{115}Sb	2E+4	7E+4	3E-5	1E-7	3E-4	3E-3
		W, see ^{115}Sb	-	1E+5	6E-5	2E-7	-	-
51	Antimony-116[2]	D, see ^{115}Sb	7E+4	3E+5	1E-4	4E-7	-	-
			St wall (9E+4)	-	-	-	1E-3	1E-2
		W, see ^{115}Sb	-	3E+5	1E-4	5E-7	-	-
51	Antimony-117	D, see ^{115}Sb	7E+4	2E+5	9E-5	3E-7	9E-4	9E-3
		W, see ^{115}Sb	-	3E+5	1E-4	4E-7	-	-
51	Antimony-118m	D, see ^{115}Sb	6E+3	2E+4	8E-6	3E-8	7E-5	7E-4
		W, see ^{115}Sb	5E+3	2E+4	9E-6	3E-8	-	-
51	Antimony-119	D, see ^{115}Sb	2E+4	5E+4	2E-5	6E-8	2E-4	2E-3
		W, see ^{115}Sb	2E+4	3E+4	1E-5	4E-8	-	-
51	Antimony-120[2] (16 min)	D, see ^{115}Sb	1E+5	4E+5	2E-4	6E-7	-	-
			St wall (2E+5)	-	-	-	2E-3	2E-2
		W, see ^{115}Sb	-	5E+5	2E-4	7E-7	-	-
51	Antimony-120 (5.76 d)	D, see ^{115}Sb	1E+3	2E+3	9E-7	3E-9	1E-5	1E-4
		W, see ^{115}Sb	9E+2	1E+3	5E-7	2E-9	-	-
51	Antimony-122	D, see ^{115}Sb	8E+2	2E+3	1E-6	3E-9	-	-
			LLI wall (8E+2)	-	-	-	1E-5	1E-4
		W, see ^{115}Sb	7E+2	1E+3	4E-7	2E-9	-	-
51	Antimony-124m[2]	D, see ^{115}Sb	3E+5	8E+5	4E-4	1E-6	3E-3	3E-2
		W, see ^{115}Sb	2E+5	6E+5	2E-4	8E-7	-	-
51	Antimony-124	D, see ^{115}Sb	6E+2	9E+2	4E-7	1E-9	7E-6	7E-5
		W, see ^{115}Sb	5E+2	2E+2	1E-7	3E-10	-	-
51	Antimony-125	D, see ^{115}Sb	2E+3	2E+3	1E-6	3E-9	3E-5	3E-4
		W, see ^{115}Sb	-	5E+2	2E-7	7E-10	-	-
51	Antimony-126m[2]	D, see ^{115}Sb	5E+4	2E+5	8E-5	3E-7	-	-
			St wall (7E+4)	-	-	-	9E-4	9E-3
		W, see ^{115}Sb	-	2E+5	8E-5	3E-7	-	-
51	Antimony-126	D, see ^{115}Sb	6E+2	1E+3	5E-7	2E-9	7E-6	7E-5
		W, see ^{115}Sb	5E+2	5E+2	2E-7	7E-10	-	-
51	Antimony-127	D, see ^{115}Sb	8E+2	2E+3	9E-7	3E-9	-	-
			LLI wall (8E+2)	-	-	-	1E-5	1E-4
		W, see ^{115}Sb	7E+2	9E+2	4E-7	1E-9	-	-

			Table I Occupational Values			Table II Effluent Concentrations		Table III Releases to Sewers
			Col. 1	Col. 2	Col. 3	Col. 1	Col. 2	
			Oral Ingestion	INHALATION				Monthly Average
Atomic Radio-nuclide No.		Class	ALI (μCi)	ALI (μCi)	DAC (μCi/ml)	Air (μCi/ml)	Water (μCi/ml)	Concentration (μCi/ml)
51	Antimony-128[2]	D, see ^{115}Sb	8E+4	4E+5	2E-4	5E-7	-	-
	(10.4 min)		St wall					
			(1E+5)	-	-	-	1E-3	1E-2
		W, see ^{115}Sb	-	4E+5	2E-4	6E-7	-	-
51	Antimony-128	D, see ^{115}Sb	1E+3	4E+3	2E-6	6E-9	2E-5	2E-4
	(9.01 h)	W, see ^{115}Sb	-	3E+3	1E-6	5E-9	-	-
51	Antimony-129	D, see ^{115}Sb	3E+3	9E+3	4E-6	1E-8	4E-5	4E-4
		W, see ^{115}Sb	-	9E+3	4E-6	1E-8	-	-
51	Antimony-130[2]	D, see ^{115}Sb	2E+4	6E+4	3E-5	9E-8	3E-4	3E-3
		W, see ^{115}Sb	-	8E+4	3E-5	1E-7	-	-
51	Antimony-131[2]	D, see ^{115}Sb	1E+4 Thyroid	2E+4 Thyroid	1E-5	-	-	-
			(2E+4)	(4E+4)	-	6E-8	2E-4	2E-3
		W, see ^{115}Sb	-	2E+4 Thyroid	1E-5	-	-	-
			-	(4E+4)	-	6E-8	-	-
52	Tellurium-116	D, all compounds except those given for W	8E+3	2E+4	9E-6	3E-8	1E-4	1E-3
		W, oxides, hydroxides, and nitrates	-	3E+4	1E-5	4E-8	-	-
52	Tellurium-121m	D, see ^{116}Te	5E+2 Bone surf	2E+2 Bone surf	8E-8	-	-	-
			(7E+2)	(4E+2)	-	5E-10	1E-5	1E-4
		W, see ^{116}Te	-	4E+2	2E-7	6E-10	-	-
52	Tellurium-121	D, see ^{116}Te	3E+3	4E+3	2E-6	6E-9	4E-5	4E-4
		W, see ^{116}Te	-	3E+3	1E-6	4E-9	-	-
52	Tellurium-123m	D, see ^{116}Te	6E+2	2E+2	9E-8	-	-	-
			Bone surf	Bone surf				
			(1E+3)	(5E+2)	-	8E-10	1E-5	1E-4
		W, see ^{116}Te	-	5E+2	2E-7	8E-10	-	-
52	Tellurium-123	D, see ^{116}Te	5E+2	2E+2	8E-8	-	-	-
			Bone surf	Bone surf				
			(1E+3)	(5E+2)	-	7E-10	2E-5	2E-4
		W, see ^{116}Te	-	4E+2	2E-7	-	-	-
				Bone surf				
			-	(1E+3)	-	2E-9	-	-
52	Tellurium-125m	D, see ^{116}Te	1E+3	4E+2	2E-7	-	-	-
			Bone surf	Bone surf				
			(1E+3)	(1E+3)	-	1E-9	2E-5	2E-4
		W, see ^{116}Te	-	7E+2	3E-7	1E-9	-	-

			Table I Occupational Values			Table II Effluent Concentrations		Table III Releases to Sewers
			Col. 1	Col. 2	Col. 3	Col. 1	Col. 2	
			Oral Ingestion	INHALATION				Monthly Average
Atomic Radio-nuclide No.		Class	ALI (µCi)	ALI (µCi)	DAC (µCi/ml)	Air (µCi/ml)	Water (µCi/ml)	Concentration (µCi/ml)
52	Tellurium-127m	D, see ^{116}Te	6E+2	3E+2	1E-7	-	9E-6	9E-5
				Bone surf				
			-	(4E+2)	-	6E-10	-	-
		W, see ^{116}Te	-	3E+2	1E-7	4E-10	-	-
52	Tellurium-127	D, see ^{116}Te	7E+3	2E+4	9E-6	3E-8	1E-4	1E-3
		W, see ^{116}Te	-	2E+4	7E-6	2E-8	-	-
52	Tellurium-129m	D, see ^{116}Te	5E+2	6E+2	3E-7	9E-10	7E-6	7E-5
		W, see ^{116}Te	-	2E+2	1E-7	3E-10	-	-
52	Tellurium-129[2]	D, see ^{116}Te	3E+4	6E+4	3E-5	9E-8	4E-4	4E-3
		W, see ^{116}Te	-	7E+4	3E-5	1E-7	-	-
52	Tellurium-131m	D, see ^{116}Te	3E+2	4E+2	2E-7	-	-	-
			Thyroid	Thyroid				
			(6E+2)	(1E+3)	-	2E-9	8E-6	8E-5
		W, see ^{116}Te	-	4E+2	2E-7	-	-	-
				Thyroid				
			-	(9E+2)	-	1E-9	-	-
52	Tellurium-131[2]	D, see ^{116}Te	3E+3	5E+3	2E-6	-	-	-
			Thyroid	Thyroid				
			(6E+3)	(1E+4)	-	2E-8	8E-5	8E-4
		W, see ^{116}Te	-	5E+3	2E-6	-	-	-
				Thyroid				
			-	(1E+4)	-	2E-8	-	-
52	Tellurium-132	D, see ^{116}Te	2E+2	2E+2	9E-8	-	-	-
			Thyroid	Thyroid				
			(7E+2)	(8E+2)	-	1E-9	9E-6	9E-5
		W, see ^{116}Te	-	2E+2	9E-8	-	-	-
				Thyroid				
			-	(6E+2)	-	9E-10	-	-
52	Tellurium-133m[2]	D, see ^{116}Te	3E+3	5E+3	2E-6	-	-	-
			Thyroid	Thyroid				
			(6E+3)	(1E+4)	-	2E-8	9E-5	9E-4
		W, see ^{116}Te	-	5E+3 Thyroid	2E-6	-	-	-
			-	(1E+4)	-	2E-8	-	-
52	Tellurium-133[2]	D, see ^{116}Te	1E+4	2E+4	9E-6	-	-	-
			Thyroid	Thyroid				
			(3E+4)	(6E+4)	-	8E-8	4E-4	4E-3
		W, see ^{116}Te	-	2E+4 Thyroid	9E-6	-	-	-
			-	(6E+4)	-	8E-8	-	-

			Table I Occupational Values			Table II Effluent Concentrations		Table III Releases to Sewers
			Col. 1	Col. 2	Col. 3	Col. 1	Col. 2	
			Oral Ingestion	INHALATION				Monthly Average
Atomic Radio-nuclide No.		Class	ALI (μCi)	ALI (μCi)	DAC (μCi/ml)	Air (μCi/ml)	Water (μCi/ml)	Concentration (μCi/ml)
52	Tellurium-134[2]	D, see ^{116}Te	2E+4	2E+4	1E-5	-	-	-
			Thyroid	Thyroid				
			(2E+4)	(5E+4)	-	7E-8	3E-4	3E-3
		W, see ^{116}Te	-	2E+4 Thyroid	1E-5	-	-	-
			-	(5E+4)	-	7E-8	-	-
53	Iodine-120m[2]	D, all compounds	1E+4	2E+4	9E-6	3E-8	-	-
			Thyroid					
			(1E+4)	-	-	-	2E-4	2E-3
53	Iodine-120[2]	D, all compounds	4E+3	9E+3	4E-6	-	-	-
			Thyroid	Thyroid				
			(8E+3)	(1E+4)	-	2E-8	1E-4	1E-3
53	Iodine-121	D, all compounds	1E+4	2E+4	8E-6	-	-	-
			Thyroid	Thyroid				
			(3E+4)	(5E+4)	-	7E-8	4E-4	4E-3
53	Iodine-123	D, all compounds	3E+3	6E+3	3E-6	-	-	-
			Thyroid	Thyroid				
			(1E+4)	(2E+4)	-	2E-8	1E-4	1E-3
53	Iodine-124	D, all compounds	5E+1	8E+1	3E-8	-	-	-
			Thyroid	Thyroid				
			(2E+2)	(3E+2)	-	4E-10	2E-6	2E-5
53	Iodine-125	D, all compounds	4E+1	6E+1	3E-8	-	-	-
			Thyroid	Thyroid				
			(1E+2)	(2E+2)	-	3E-10	2E-6	2E-5
53	Iodine-126	D, all compounds	2E+1	4E+1	1E-8	-	-	-
			Thyroid	Thyroid				
			(7E+1)	(1E+2)	-	2E-10	1E-6	1E-5
53	Iodine-128[2]	D, all compounds	4E+4	1E+5	5E-5	2E-7	-	-
			St wall					
			(6E+4)	-	-	-	8E-4	8E-3
53	Iodine-129	D, all compounds	5E+0	9E+0	4E-9	-	-	-
			Thyroid	Thyroid				
			(2E+1)	(3E+1)	-	4E-11	2E-7	2E-6
53	Iodine-130	D, all compounds	4E+2	7E+2	3E-7	-	-	-
			Thyroid	Thyroid				
			(1E+3)	(2E+3)	-	3E-9	2E-5	2E-4
53	Iodine-131	D, all compounds	3E+1	5E+1	2E-8	-	-	-
			Thyroid	Thyroid				
			(9E+1)	(2E+2)	-	2E-10	1E-6	1E-5
53	Iodine-132m[2]	D, all compounds	4E+3	8E+3	4E-6	-	-	-
			Thyroid	Thyroid				
			(1E+4)	(2E+4)	-	3E-8	1E-4	1E-3

			Table I Occupational Values			Table II Effluent Concentrations		Table III Releases to Sewers
			Col. 1	Col. 2	Col. 3	Col. 1	Col. 2	
			Oral Ingestion	INHALATION				Monthly Average
Atomic Radio-nuclide No.		Class	ALI (µCi)	ALI (µCi)	DAC (µCi/ml)	Air (µCi/ml)	Water (µCi/ml)	Concentration (µCi/ml)
53	Iodine-132	D, all compounds	4E+3	8E+3	3E-6	-	-	-
			Thyroid	Thyroid				
			(9E+3)	(1E+4)	-	2E-8	1E-4	1E-3
53	Iodine-133	D, all compounds	1E+2	3E+2	1E-7	-	-	-
			Thyroid	Thyroid				
			(5E+2)	(9E+2)	-	1E-9	7E-6	7E-5
53	Iodine-134[2]	D, all compounds	2E+4	5E+4	2E-5	6E-8	-	-
			Thyroid					
			(3E+4)	-	-	-	4E-4	4E-3
53	Iodine-135	D, all compounds	8E+2	2E+3	7E-7	-	-	-
			Thyroid	Thyroid				
			(3E+3)	(4E+3)	-	6E-9	3E-5	3E-4
54	Xenon-120[2]	Submersion[1]	-	-	1E-5	4E-8	-	-
54	Xenon-121[2]	Submersion[1]	-	-	2E-6	1E-8	-	-
54	Xenon-122	Submersion[1]	-	-	7E-5	3E-7	-	-
54	Xenon-123	Submersion[1]	-	-	6E-6	3E-8	-	-
54	Xenon-125	Submersion[1]	-	-	2E-5	7E-8	-	-
54	Xenon-127	Submersion[1]	-	-	1E-5	6E-8	-	-
54	Xenon-129m	Submersion[1]	-	-	2E-4	9E-7	-	-
54	Xenon-131m	Submersion[1]	-	-	4E-4	2E-6	-	-
54	Xenon-133m	Submersion[1]	-	-	1E-4	6E-7	-	-
54	Xenon-133	Submersion[1]	-	-	1E-4	5E-7	-	-
54	Xenon-135m[2]	Submersion[1]	-	-	9E-6	4E-8	-	-
54	Xenon-135	Submersion[1]	-	-	1E-5	7E-8	-	-
54	Xenon-138[2]	Submersion[1]	-	-	4E-6	2E-8	-	-
55	Cesium-125[2]	D, all compounds	5E+4	1E+5	6E-5	2E-7	-	-
			St wall					
			(9E+4)	-	-	-	1E-3	1E-2
55	Cesium-127	D, all compounds	6E+4	9E+4	4E-5	1E-7	9E-4	9E-3
55	Cesium-129	D, all compounds	2E+4	3E+4	1E-5	5E-8	3E-4	3E-3
55	Cesium-130[2]	D, all compounds	6E+4	2E+5	8E-5	3E-7	-	-
			St wall					
			(1E+5)	-	-	-	1E-3	1E-2
55	Cesium-131	D, all compounds	2E+4	3E+4	1E-5	4E-8	3E-4	3E-3
55	Cesium-132	D, all compounds	3E+3	4E+3	2E-6	6E-9	4E-5	4E-4
55	Cesium-134m	D, all compounds	1E+5	1E+5	6E-5	2E-7	-	-
			St wall					
			(1E+5)	-	-	-	2E-3	2E-2
55	Cesium-134	D, all compounds	7E+1	1E+2	4E-8	2E-10	9E-7	9E-6
55	Cesium-135m[2]	D, all compounds	1E+5	2E+5	8E-5	3E-7	1E-3	1E-2
55	Cesium-135	D, all compounds	7E+2	1E+3	5E-7	2E-9	1E-5	1E-4
55	Cesium-136	D, all compounds	4E+2	7E+2	3E-7	9E-10	6E-6	6E-5

			Table I Occupational Values			Table II Effluent Concentrations		Table III Releases to Sewers
			Col. 1	Col. 2	Col. 3	Col. 1	Col. 2	
			Oral Ingestion	INHALATION				Monthly Average
Atomic Radio-nuclide No.		Class	ALI (μCi)	ALI (μCi)	DAC (μCi/ml)	Air (μCi/ml)	Water (μCi/ml)	Concentration (μCi/ml)
55	Cesium-137	D, all compounds	1E+2	2E+2	6E-8	2E-10	1E-6	1E-5
55	Cesium-138[2]	D, all compounds	2E+4	6E+4	2E-5	8E-8	-	-
			St wall					
			(3E+4)	-	-	-	4E-4	4E-3
56	Barium-126[2]	D, all compounds	6E+3	2E+4	6E-6	2E-8	8E-5	8E-4
56	Barium-128	D, all compounds	5E+2	2E+3	7E-7	2E-9	7E-6	7E-5
56	Barium-131m[2]	D, all compounds	4E+5	1E+6	6E-4	2E-6	-	-
			St wall					
			(5E+5)	-	-	-	7E-3	7E-2
56	Barium-131	D, all compounds	3E+3	8E+3	3E-6	1E-8	4E-5	4E-4
56	Barium-133m	D, all compounds	2E+3	9E+3	4E-6	1E-8	-	-
			LLI wall					
			(3E+3)	-	-	-	4E-5	4E-4
56	Barium-133	D, all compounds	2E+3	7E+2	3E-7	9E-10	2E-5	2E-4
56	Barium-135m	D, all compounds	3E+3	1E+4	5E-6	2E-8	4E-5	4E-4
56	Barium-139[2]	D, all compounds	1E+4	3E+4	1E-5	4E-8	2E-4	2E-3
56	Barium-140	D, all compounds	5E+2	1E+3	6E-7	2E-9	-	-
			LLI wall					
			(6E+2)	-	-	-	8E-6	8E-5
56	Barium-141[2]	D, all compounds	2E+4	7E+4	3E-5	1E-7	3E-4	3E-3
56	Barium-142[2]	D, all compounds	5E+4	1E+5	6E-5	2E-7	7E-4	7E-3
57	Lanthanum-131[2]	D, all compounds except those given for W	5E+4	1E+5	5E-5	2E-7	6E-4	6E-3
		W, oxides and hydroxides	-	2E+5	7E-5	2E-7	-	-
57	Lanthanum-132	D, see ^{131}La	3E+3	1E+4	4E-6	1E-8	4E-5	4E-4
		W, see ^{131}La	-	1E+4	5E-6	2E-8	-	-
57	Lanthanum-135	D, see ^{131}La	4E+4	1E+5	4E-5	1E-7	5E-4	5E-3
		W, see ^{131}La	-	9E+4	4E-5	1E-7	-	-
57	Lanthanum-137	D, see ^{131}La	1E+4	6E+1	3E-8	-	2E-4	2E-3
				Liver				
			-	(7E+1)	-	1E-10	-	-
		W, see ^{131}La	-	3E+2	1E-7	-	-	-
				Liver				
			-	(3E+2)	-	4E-10	-	-
57	Lanthanum-138	D, see ^{131}La	9E+2	4E+0	1E-9	5E-12	1E-5	1E-4
		W, see ^{131}La	-	1E+1	6E-9	2E-11	-	-
57	Lanthanum-140	D, see ^{131}La	6E+2	1E+3	6E-7	2E-9	9E-6	9E-5
		W, see ^{131}La	-	1E+3	5E-7	2E-9	-	-
57	Lanthanum-141	D, see ^{131}La	4E+3	9E+3	4E-6	1E-8	5E-5	5E-4
		W, see ^{131}La	-	1E+4	5E-6	2E-8	-	-
57	Lanthanum-142[2]	D, see ^{131}La	8E+3	2E+4	9E-6	3E-8	1E-4	1E-3
		W, see ^{131}La	-	3E+4	1E-5	5E-8	-	-

			Table I Occupational Values			Table II Effluent Concentrations		Table III Releases to Sewers
			Col. 1	Col. 2	Col. 3	Col. 1	Col. 2	
			Oral Ingestion	INHALATION				Monthly Average
Atomic Radio-nuclide No.		Class	ALI (µCi)	ALI (µCi)	DAC (µCi/ml)	Air (µCi/ml)	Water (µCi/ml)	Concentration (µCi/ml)
57	Lanthanum-143[2]	D, see ^{131}La	4E+4	1E+5	4E-5	1E-7	-	-
			St wall					
			(4E+4)	-	-	-	5E-4	5E-3
		W, see ^{131}La	-	9E+4	4E-5	1E-7	-	-
58	Cerium-134	W, all compounds except those given for Y	5E+2	7E+2	3E-7	1E-9	-	-
			LLI wall					
			(6E+2)	-	-	-	8E-6	8E-5
		Y, oxides, hydroxides, and fluorides	-	7E+2	3E-7	9E-10	-	-
58	Cerium-135	W, see ^{134}Ce	2E+3	4E+3	2E-6	5E-9	2E-5	2E-4
		Y, see ^{134}Ce	-	4E+3	1E-6	5E-9	-	-
58	Cerium-137m	W, see ^{134}Ce	2E+3	4E+3	2E-6	6E-9	-	-
			LLI wall					
			(2E+3)	-	-	-	3E-5	3E-4
		Y, see ^{134}Ce	-	4E+3	2E-6	5E-9	-	-
58	Cerium-137	W, see ^{134}Ce	5E+4	1E+5	6E-5	2E-7	7E-4	7E-3
		Y, see ^{134}Ce	-	1E+5	5E-5	2E-7	-	-
58	Cerium-139	W, see ^{134}Ce	5E+3	8E+2	3E-7	1E-9	7E-5	7E-4
		Y, see ^{134}Ce	-	7E+2	3E-7	9E-10	-	-
58	Cerium-141	W, see ^{134}Ce	2E+3	7E+2	3E-7	1E-9	-	-
			LLI wall					
			(2E+3)	-	-	-	3E-5	3E-4
		Y, see ^{134}Ce	-	6E+2	2E-7	8E-10	-	-
58	Cerium-143	W, see ^{134}Ce	1E+3	2E+3	8E-7	3E-9	-	-
			LLI wall					
			(1E+3)	-	-	-	2E-5	2E-4
		Y, see ^{134}Ce	-	2E+3	7E-7	2E-9	-	-
58	Cerium-144	W, see ^{134}Ce	2E+2	3E+1	1E-8	4E-11	-	-
			LLI wall					
			(3E+2)	-	-	-	3E-6	3E-5
		Y, see ^{134}Ce	-	1E+1	6E-9	2E-11	-	-
59	Praseodymium-136[2]	W, all compounds except those given for Y	5E+4	2E+5	1E-4	3E-7	-	-
			St wall					
			(7E+4)	-	-	-	1E-3	1E-2
		Y, oxides, hydroxides, carbides, and fluorides	-	2E+5	9E-5	3E-7	-	-
59	Praseodymium-137[2]	W, see ^{136}Pr	4E+4	2E+5	6E-5	2E-7	5E-4	5E-3
		Y, see ^{136}Pr	-	1E+5	6E-5	2E-7	-	-
59	Praseodymium-138m	W, see ^{136}Pr	1E+4	5E+4	2E-5	8E-8	1E-4	1E-3
		Y, see ^{136}Pr	-	4E+4	2E-5	6E-8	-	-

			Table I Occupational Values			Table II Effluent Concentrations		Table III Releases to Sewers
			Col. 1	Col. 2	Col. 3	Col. 1	Col. 2	
			Oral Ingestion	INHALATION				Monthly Average
Atomic Radio-nuclide No.		Class	ALI (μCi)	ALI (μCi)	DAC (μCi/ml)	Air (μCi/ml)	Water (μCi/ml)	Concentration (μCi/ml)
59	Praseodymium-	W, see ^{136}Pr	4E+4	1E+5	5E-5	2E-7	6E-4	6E-3
	139	Y, see ^{136}Pr	-	1E+5	5E-5	2E-7	-	-
59	Praseodymium-	W, see ^{136}Pr	8E+4	2E+5	7E-5	2E-7	1E-3	1E-2
	142m[2]	Y, see ^{136}Pr	-	1E+5	6E-5	2E-7	-	-
59	Praseodymium-	W, see ^{136}Pr	1E+3	2E+3	9E-7	3E-9	1E-5	1E-4
	142	Y, see ^{136}Pr	-	2E+3	8E-7	3E-9	-	-
59	Praseodymium-	W, see ^{136}Pr	9E+2	8E+2	3E-7	1E-9	-	-
	143		LLI wall					
			(1E+3)	-	-	-	2E-5	2E-4
		Y, see ^{136}Pr	-	7E+2	3E-7	9E-10	-	-
59	Praseodymium-	W, see ^{136}Pr	3E+4	1E+5	5E-5	2E-7	-	-
	144[2]		St wall					
			(4E+4)	-	-	-	6E-4	6E-3
		Y, see ^{136}Pr	-	1E+5	5E-5	2E-7	-	-
59	Praseodymium-	W, see ^{136}Pr	3E+3	9E+3	4E-6	1E-8	4E-5	4E-4
	145	Y, see ^{136}Pr	-	8E+3	3E-6	1E-8	-	-
59	Praseodymium-	W, see ^{136}Pr	5E+4	2E+5	8E-5	3E-7	-	-
	147[2]		St wall					
			(8E+4)	-	-	-	1E-3	1E-2
		Y, see ^{136}Pr	-	2E+5	8E-5	3E-7	-	-
60	Neodymium-136[2]	W, all compounds except those given for Y	1E+4	6E+4	2E-5	8E-8	2E-4	2E-3
		Y, oxides, hydroxides, carbides, and fluorides	-	5E+4	2E-5	8E-8	-	-
60	Neodymium-138	W, see ^{136}Nd	2E+3	6E+3	3E-6	9E-9	3E-5	3E-4
		Y, see ^{136}Nd	-	5E+3	2E-6	7E-9	-	-
60	Neodymium-	W, see ^{136}Nd	5E+3	2E+4	7E-6	2E-8	7E-5	7E-4
	139m	Y, see ^{136}Nd	-	1E+4	6E-6	2E-8	-	-
60	Neodymium-	W, see ^{136}Nd	9E+4	3E+5	1E-4	5E-7	1E-3	1E-2
	139[2]	Y, see ^{136}Nd	-	3E+5	1E-4	4E-7	-	-
60	Neodymium-141	W, see ^{136}Nd	2E+5	7E+5	3E-4	1E-6	2E-3	2E-2
		Y, see ^{136}Nd	-	6E+5	3E-4	9E-7	-	-
60	Neodymium-147	W, see ^{136}Nd	1E+3	9E+2	4E-7	1E-9	-	-
			LLI wall					
			(1E+3)	-	-	-	2E-5	2E-4
		Y, see ^{136}Nd	-	8E+2	4E-7	1E-9	-	-
60	Neodymium-149[2]	W, see ^{136}Nd	1E+4	3E+4	1E-5	4E-8	1E-4	1E-3
		Y, see ^{136}Nd	-	2E+4	1E-5	3E-8	-	-
60	Neodymium-151[2]	W, see ^{136}Nd	7E+4	2E+5	8E-5	3E-7	9E-4	9E-3
		Y, see ^{136}Nd	-	2E+5	8E-5	3E-7	-	-

			Table I Occupational Values			Table II Effluent Concentrations		Table III Releases to Sewers
			Col. 1	Col. 2	Col. 3	Col. 1	Col. 2	
			Oral Ingestion	INHALATION				Monthly Average
Atomic Radio-nuclide No.		Class	ALI (μCi)	ALI (μCi)	DAC (μCi/ml)	Air (μCi/ml)	Water (μCi/ml)	Concentration (μCi/ml)
61	Promethium-141[2]	W, all compounds except those given for Y	5E+4	2E+5	8E-5	3E-7	-	-
			St wall (6E+4)	-	-	-	8E-4	8E-3
		Y, oxides, hydroxides, carbides, and fluorides	-	2E+5	7E-5	2E-7	-	-
61	Promethium-143	W, see ^{141}Pm	5E+3	6E+2	2E-7	8E-10	7E-5	7E-4
		Y, see ^{141}Pm	-	7E+2	3E-7	1E-9	-	-
61	Promethium-144	W, see ^{141}Pm	1E+3	1E+2	5E-8	2E-10	2E-5	2E-4
		Y, see ^{141}Pm	-	1E+2	5E-8	2E-10	-	-
61	Promethium-145	W, see ^{141}Pm	1E+4	2E+2 Bone surf	7E-8	-	1E-4	1E-3
			-	(2E+2)	-	3E-10	-	-
		Y, see ^{141}Pm	-	2E+2	8E-8	3E-10	-	-
61	Promethium-146	W, see ^{141}Pm	2E+3	5E+1	2E-8	7E-11	2E-5	2E-4
		Y, see ^{141}Pm	-	4E+1	2E-8	6E-11	-	-
61	Promethium-147	W, see ^{141}Pm	4E+3 LLI wall	1E+2 Bone surf	5E-8	-	-	-
			(5E+3)	(2E+2)	-	3E-10	7E-5	7E-4
		Y, see ^{141}Pm	-	1E+2	6E-8	2E-10	-	-
61	Promethium-148m	W, see ^{141}Pm	7E+2	3E+2	1E-7	4E-10	1E-5	1E-4
		Y, see ^{141}Pm	-	3E+2	1E-7	5E-10	-	-
61	Promethium-148	W, see ^{141}Pm	4E+2 LLI wall	5E+2	2E-7	8E-10	-	-
			(5E+2)	-	-	-	7E-6	7E-5
		Y, see ^{141}Pm	-	5E+2	2E-7	7E-10	-	-
61	Promethium-149	W, see ^{141}Pm	1E+3 LLI wall	2E+3	8E-7	3E-9	-	-
			(1E+3)	-	-	-	2E-5	2E-4
		Y, see ^{141}Pm	-	2E+3	8E-7	2E-9	-	-
61	Promethium-150	W, see ^{141}Pm	5E+3	2E+4	8E-6	3E-8	7E-5	7E-4
		Y, see ^{141}Pm	-	2E+4	7E-6	2E-8	-	-
61	Promethium-151	W, see ^{141}Pm	2E+3	4E+3	1E-6	5E-9	2E-5	2E-4
		Y, see ^{141}Pm	-	3E+3	1E-6	4E-9	-	-
62	Samarium-141m[2]	W, all compounds	3E+4	1E+5	4E-5	1E-7	4E-4	4E-3
62	Samarium-141[2]	W, all compounds	5E+4 St wall	2E+5	8E-5	2E-7	-	-
			(6E+4)	-	-	-	8E-4	8E-3
62	Samarium-142[2]	W, all compounds	8E+3	3E+4	1E-5	4E-8	1E-4	1E-3
62	Samarium-145	W, all compounds	6E+3	5E+2	2E-7	7E-10	8E-5	8E-4
62	Samarium-146	W, all compounds	1E+1 Bone surf	4E-2 Bone surf	1E-11	-	-	-

			Table I Occupational Values			Table II Effluent Concentrations		Table III Releases to Sewers
			Col. 1	Col. 2	Col. 3	Col. 1	Col. 2	
			Oral Ingestion	INHALATION				Monthly Average
Atomic Radio-nuclide No.		Class	ALI (µCi)	ALI (µCi)	DAC (µCi/ml)	Air (µCi/ml)	Water (µCi/ml)	Concentration (µCi/ml)
			(3E+1)	(6E-2)	-	9E-14	3E-7	3E-6
62	Samarium-147	W, all compounds	2E+1 Bone surf	4E-2 Bone surf	2E-11	-	-	-
			(3E+1)	(7E-2)	-	1E-13	4E-7	4E-6
62	Samarium-151	W, all compounds	1E+4 LLI wall	1E+2 Bone surf	4E-8	-	-	-
			(1E+4)	(2E+2)	-	2E-10	2E-4	2E-3
62	Samarium-153	W, all compounds	2E+3 LLI wall	3E+3	1E-6	4E-9	-	-
			(2E+3)	-	-	-	3E-5	3E-4
62	Samarium-155[2]	W, all compounds	6E+4	2E+5	9E-5	3E-7	-	-
			St wall					
			(8E+4)	-	-	-	1E-3	1E-2
62	Samarium-156	W, all compounds	5E+3	9E+3	4E-6	1E-8	7E-5	7E-4
63	Europium-145	W, all compounds	2E+3	2E+3	8E-7	3E-9	2E-5	2E-4
63	Europium-146	W, all compounds	1E+3	1E+3	5E-7	2E-9	1E-5	1E-4
63	Europium-147	W, all compounds	3E+3	2E+3	7E-7	2E-9	4E-5	4E-4
63	Europium-148	W, all compounds	1E+3	4E+2	1E-7	5E-10	1E-5	1E-4
63	Europium-149	W, all compounds	1E+4	3E+3	1E-6	4E-9	2E-4	2E-3
63	Europium-150 (12.62 h)	W, all compounds	3E+3	8E+3	4E-6	1E-8	4E-5	4E-4
63	Europium-150 (34.2 y)	W, all compounds	8E+2	2E+1	8E-9	3E-11	1E-5	1E-4
63	Europium-152m	W, all compounds	3E+3	6E+3	3E-6	9E-9	4E-5	4E-4
63	Europium-152	W, all compounds	8E+2	2E+1	1E-8	3E-11	1E-5	1E-4
63	Europium-154	W, all compounds	5E+2	2E+1	8E-9	3E-11	7E-6	7E-5
63	Europium-155	W, all compounds	4E+3	9E+1	4E-8	-	5E-5	5E-4
				Bone surf				
			-	(1E+2)	-	2E-10	-	-
63	Europium-156	W, all compounds	6E+2	5E+2	2E-7	6E-10	8E-6	8E-5
63	Europium-157	W, all compounds	2E+3	5E+3	2E-6	7E-9	3E-5	3E-4
63	Europium-158[2]	W, all compounds	2E+4	6E+4	2E-5	8E-8	3E-4	3E-3
64	Gadolinium-145[2]	D, all compounds except those given for W	5E+4	2E+5	6E-5	2E-7	-	-
			St wall					
			(5E+4)	-	-	-	6E-4	6E-3
		W, oxides, hydroxides, and fluorides	-	2E+5	7E-5	2E-7	-	-
64	Gadolinium-146	D, see ^{145}Gd	1E+3	1E+2	5E-8	2E-10	2E-5	2E-4
		W, see ^{145}Gd	-	3E+2	1E-7	4E-10	-	-
64	Gadolinium-147	D, see ^{145}Gd	2E+3	4E+3	2E-6	6E-9	3E-5	3E-4
		W, see ^{145}Gd	-	4E+3	1E-6	5E-9	-	-

			Table I Occupational Values			Table II Effluent Concentrations		Table III Releases to Sewers
			Col. 1	Col. 2	Col. 3	Col. 1	Col. 2	
			Oral Ingestion	INHALATION				Monthly Average
Atomic Radio-nuclide No.		Class	ALI (μCi)	ALI (μCi)	DAC (μCi/ml)	Air (μCi/ml)	Water (μCi/ml)	Concentration (μCi/ml)
64	Gadolinium-148	D, see ^{145}Gd	1E+1	8E+3	3E-12	-	-	-
			Bone surf	Bone surf				
			(2E+1)	(2E+2)	-	2E-14	3E-7	3E-6
		W, see ^{145}Gd	-	3E-2	1E-11	-	-	-
				Bone surf				
			-	(6E-2)	-	8E-14	-	-
64	Gadolinium-149	D, see ^{145}Gd	3E+3	2E+3	9E-7	3E-9	4E-5	4E-4
		W, see ^{145}Gd	-	2E+3	1E-6	3E-9	-	-
64	Gadolinium-151	D, see ^{145}Gd	6E+3	4E+2	2E-7	-	9E-5	9E-4
				Bone surf				
			-	(6E+2)	-	9E-10	-	-
		W, see ^{145}Gd	-	1E+3	5E-7	2E-9	-	-
64	Gadolinium-152	D, see ^{145}Gd	2E+1	1E-2	4E-12	-	-	-
			Bone surf	Bone surf				
			(3E+1)	(2E-2)	-	3E-14	4E-7	4E-6
		W, see ^{145}Gd	-	4E-2	2E-11	-	-	-
				Bone surf				
			-	(8E-2)	-	1E-13	-	-
64	Gadolinium-153	D, see ^{145}Gd	5E+3	1E+2	6E-8	-	6E-5	6E-4
				Bone surf				
			-	(2E+2)	-	3E-10	-	-
		W, see ^{145}Gd	-	6E+2	2E-7	8E-10	-	-
64	Gadolinium-159	D, see ^{145}Gd	3E+3	8E+3	3E-6	1E-8	4E-5	4E-4
		W, see ^{145}Gd	-	6E+3	2E-6	8E-9	-	-
65	Terbium-147[2]	W, all compounds	9E+3	3E+4	1E-5	5E-8	1E-4	1E-3
65	Terbium-149	W, all compounds	5E+3	7E+2	3E-7	1E-9	7E-5	7E-4
65	Terbium-150	W, all compounds	5E+3	2E+4	9E-6	3E-8	7E-5	7E-4
65	Terbium-151	W, all compounds	4E+3	9E+3	4E-6	1E-8	5E-5	5E-4
65	Terbium-153	W, all compounds	5E+3	7E+3	3E-6	1E-8	7E-5	7E-4
65	Terbium-154	W, all compounds	2E+3	4E+3	2E-6	6E-9	2E-5	2E-4
65	Terbium-155	W, all compounds	6E+3	8E+3	3E-6	1E-8	8E-5	8E-4
65	Terbium-156m (5.0 h)	W, all compounds	2E+4	3E+4	1E-5	4E-8	2E-4	2E-3
65	Terbium-156m (24.4 h)	W, all compounds	7E+3	8E+3	3E-6	1E-8	1E-4	1E-3
65	Terbium-156	W, all compounds	1E+3	1E+3	6E-7	2E-9	1E-5	1E-4
65	Terbium-157	W, all compounds	5E+4	3E+2	1E-7	-	-	-
			LLI wall	Bone surf				
			(5E+4)	(6E+2)	-	8E-10	7E-4	7E-3

			Table I Occupational Values			Table II Effluent Concentrations		Table III Releases to Sewers
			Col. 1	Col. 2	Col. 3	Col. 1	Col. 2	
			Oral Ingestion	INHALATION				Monthly Average
Atomic Radio-nuclide No.		Class	ALI (µCi)	ALI (µCi)	DAC (µCi/ml)	Air (µCi/ml)	Water (µCi/ml)	Concentration (µCi/ml)
65	Terbium-158	W, all compounds	1E+3	2E+1	8E-9	3E-11	2E-5	2E-4
65	Terbium-160	W, all compounds	8E+2	2E+2	9E-8	3E-10	1E-5	1E-4
65	Terbium-161	W, all compounds	2E+3	2E+3	7E-7	2E-9	-	-
			LLI wall					
			(2E+3)	-	-	-	3E-5	3E-4
66	Dysprosium-155	W, all compounds	9E+3	3E+4	1E-5	4E-8	1E-4	1E-3
66	Dysprosium-157	W, all compounds	2E+4	6E+4	3E-5	9E-8	3E-4	3E-3
66	Dysprosium-159	W, all compounds	1E+4	2E+3	1E-6	3E-9	2E-4	2E-3
66	Dysprosium-165	W, all compounds	1E+4	5E+4	2E-5	6E-8	2E-4	2E-3
66	Dysprosium-166	W, all compounds	6E+2	7E+2	3E-7	1E-9	-	-
			LLI wall					
			(8E+2)	-	-	-	1E-5	1E-4
67	Holmium-155[2]	W, all compounds	4E+4	2E+5	6E-5	2E-7	6E-4	6E-3
67	Holmium-157[2]	W, all compounds	3E+5	1E+6	6E-4	2E-6	4E-3	4E-2
67	Holmium-159[2]	W, all compounds	2E+5	1E+6	4E-4	1E-6	3E-3	3E-2
67	Holmium-161	W, all compounds	1E+5	4E+5	2E-4	6E-7	1E-3	1E-2
67	Holmium-162m[2]	W, all compounds	5E+4	3E+5	1E-4	4E-7	7E-4	7E-3
67	Holmium-162[2]	W, all compounds	5E+5	2E+6	1E-3	3E-6	-	-
			St wall					
			(8E+5)	-	-	-	1E-2	1E-1
67	Holmium-164m[2]	W, all compounds	1E+5	3E+5	1E-4	4E-7	1E-3	1E-2
67	Holmium-164[2]	W, all compounds	2E+5	6E+5	3E-4	9E-7	-	-
			St wall					
			(2E+5)	-	-	-	3E-3	3E-2
67	Holmium-166m	W, all compounds	6E+2	7E+0	3E-9	9E-12	9E-6	9E-5
67	Holmium-166	W, all compounds	9E+2	2E+3	7E-7	2E-9	-	-
			LLI wall					
			(9E+2)	-	-	-	1E-5	1E-4
67	Holmium-167	W, all compounds	2E+4	6E+4	2E-5	8E-8	2E-4	2E-3
68	Erbium-161	W, all compounds	2E+4	6E+4	3E-5	9E-8	2E-4	2E-3
68	Erbium-165	W, all compounds	6E+4	2E+5	8E-5	3E-7	9E-4	9E-3
68	Erbium-169	W, all compounds	3E+3	3E+3	1E-6	4E-9	-	-
			LLI wall					
			(4E+3)	-	-	-	5E-5	5E-4
68	Erbium-171	W, all compounds	4E+3	1E+4	4E-6	1E-8	5E-5	5E-4
68	Erbium-172	W, all compounds	1E+3	1E+3	6E-7	2E-9	-	-
			LLI wall					
			(E+3)	-	-	-	2E-5	2E-4
69	Thulium-162[2]	W, all compounds	7E+4	3E+5	1E-4	4E-7	-	-
			St wall					
			(7E+4)	-	-	-	1E-3	1E-2
69	Thulium-166	W, all compounds	4E+3	1E+4	6E-6	2E-8	6E-5	6E-4
69	Thulium-167	W, all compounds	2E+3	2E+3	8E-7	3E-9	-	-
			LLI wall					
			(2E+3)	-	-	-	3E-5	3E-4

			Table I Occupational Values			Table II Effluent Concentrations		Table III Releases to Sewers
			Col. 1	Col. 2	Col. 3	Col. 1	Col. 2	
			Oral Ingestion	INHALATION				Monthly Average
Atomic Radio-nuclide No.		Class	ALI (μCi)	ALI (μCi)	DAC (μCi/ml)	Air (μCi/ml)	Water (μCi/ml)	Concentration (μCi/ml)
69	Thulium-170	W, all compounds	8E+2	2E+2	9E-8	3E-10	-	-
			LLI wall					
			(1E+3)	-	-	-	1E-5	1E-4
69	Thulium-171	W, all compounds	1E+4	3E+2	1E-7	-	-	-
			LLI wall	Bone surf				
			(1E+4)	(6E+2)	-	8E-10	2E-4	2E-3
69	Thulium-172	W, all compounds	7E+2	1E+3	5E-7	2E-9	-	-
			LLI wall					
			(8E+2)	-	-	-	1E-5	1E-4
69	Thulium-173	W, all compounds	4E+3	1E+4	5E-6	2E-8	6E-5	6E-4
69	Thulium-175[2]	W, all compounds	7E+4	3E+5	1E-4	4E-7	-	-
			St wall					
			(9E+4)	-	-	-	1E-3	1E-2
70	Ytterbium-162[2]	W, all compounds except those given for Y	7E+4	3E+5	1E-4	4E-7	1E-3	1E-2
		Y, oxides, hydroxides, and fluorides	-	3E+5	1E-4	4E-7	-	-
70	Ytterbium-166	W, see ^{162}Yb	1E+3	2E+3	8E-7	3E-9	2E-5	2E-4
		Y, see ^{162}Yb	-	2E+3	8E-7	3E-9	-	-
70	Ytterbium-167[2]	W, see ^{162}Yb	3E+5	8E+5	3E-4	1E-6	4E-3	4E-2
		Y, see ^{162}Yb	-	7E+5	3E-4	1E-6	-	-
70	Ytterbium-169	W, see ^{162}Yb	2E+3	8E+2	4E-7	1E-9	2E-5	2E-4
		Y, see ^{162}Yb	-	7E+2	3E-7	1E-9	-	-
70	Ytterbium-175	W, see ^{162}Yb	3E+3	4E+3	1E-6	5E-9	-	-
			LLI wall					
			(3E+3)	-	-	-	4E-5	4E-4
		Y, see ^{162}Yb	-	3E+3	1E-6	5E-9	-	-
70	Ytterbium-177[2]	W, see ^{162}Yb	2E+4	5E+4	2E-5	7E-8	2E-4	2E-3
		Y, see ^{162}Yb	-	5E+4	2E-5	6E-8	-	-
70	Ytterbium-178[2]	W, see ^{162}Yb	1E+4	4E+4	2E-5	6E-8	2E-4	2E-3
		Y, see ^{162}Yb	-	4E+4	2E-5	5E-8	-	-
71	Lutetium-169	W, all compounds except those given for Y	3E+3	4E+3	2E-6	6E-9	3E-5	3E-4
		Y, oxides, hydroxides, and fluorides	-	4E+3	2E-6	6E-9	-	-
71	Lutetium-170	W, see ^{169}Lu	1E+3	2E+3	9E-7	3E-9	2E-5	2E-4
		Y, see ^{169}Lu	-	2E+3	8E-7	3E-9	-	-
71	Lutetium-171	W, see ^{169}Lu	2E+3	2E+3	8E-7	3E-9	3E-5	3E-4
		Y, see ^{169}Lu	-	2E+3	8E-7	3E-9	-	-
71	Lutetium-172	W, see ^{169}Lu	1E+3	1E+3	5E-7	2E-9	1E-5	1E-4
		Y, see ^{169}Lu	-	1E+3	5E-7	2E-9	-	-

			Table I Occupational Values			Table II Effluent Concentrations		Table III Releases to Sewers
			Col. 1	Col. 2	Col. 3	Col. 1	Col. 2	
			Oral Ingestion	INHALATION				Monthly Average
Atomic Radio-nuclide No.		Class	ALI (µCi)	ALI (µCi)	DAC (µCi/ml)	Air (µCi/ml)	Water (µCi/ml)	Concentration (µCi/ml)
71	Lutetium-173	W, see ^{169}Lu	5E+3	3E+2	1E-7	-	7E-5	7E-4
				Bone surf				
			-	(5E+2)	-	6E-10	-	-
		Y, see ^{169}Lu	-	3E+2	1E-7	4E-10	-	-
71	Lutetium-174m	W, see ^{169}Lu	2E+3	2E+2	1E-7	-	-	-
			LLI wall	Bone surf				
			(3E+3)	(3E+2)	-	5E-10	4E-5	4E-4
		Y, see ^{169}Lu	-	2E+2	9E-8	3E-10	-	-
71	Lutetium-174	W, see ^{169}Lu	5E+3	1E+2	5E-8	-	7E-5	7E-4
				Bone surf				
			-	(2E+2)	-	3E-10	-	-
		Y, see ^{169}Lu	-	2E+2	6E-8	2E-10	-	-
71	Lutetium-176m	W, see ^{169}Lu	8E+3	3E+4	1E-5	3E-8	1E-4	1E-3
		Y, see ^{169}Lu	-	2E+4	9E-6	3E-8	-	-
71	Lutetium-176	W, see ^{169}Lu	7E+2	5E+0	2E-9	-	1E-5	1E-4
				Bone surf				
			-	(1E+1)	-	2E-11	-	-
		Y, see ^{169}Lu	-	8E+0	3E-9	1E-11	-	-
71	Lutetium-177m	W, see ^{169}Lu	7E+2	1E+2	5E-8	-	1E-5	1E-4
				Bone surf				
			-	(1E+2)	-	2E-10	-	-
		Y, see ^{169}Lu	-	8E+1	3E-8	1E-10	-	-
71	Lutetium-177	W, see ^{169}Lu	2E+3	2E+3	9E-7	3E-9	-	-
			LLI wall					
			(3E+3)	-	-	-	4E-5	4E-4
		Y, see ^{169}Lu	-	2E+3	9E-7	3E-9	-	-
71	Lutetium-178m[2]	W, see ^{169}Lu	5E+4	2E+5	8E-5	3E-7	-	-
			St wall					
			(6E+4)	-	-	-	8E-4	8E-3
		Y, see ^{169}Lu	-	2E+5	7E-5	2E-7	-	-
71	Lutetium-178[2]	W, see ^{169}Lu	4E+4	1E+5	5E-5	2E-7	-	-
			St wall					
			(4E+4)	-	-	-	6E-4	6E-3
		Y, see ^{169}Lu	-	1E+5	5E-5	2E-7	-	-
71	Lutetium-179	W, see ^{169}Lu	6E+3	2E+4	8E-6	3E-8	9E-5	9E-4
		Y, see ^{169}Lu	-	2E+4	6E-6	3E-8	-	-

			Table I Occupational Values			Table II Effluent Concentrations		Table III Releases to Sewers
			Col. 1	Col. 2	Col. 3	Col. 1	Col. 2	
			Oral Ingestion	INHALATION				Monthly Average
Atomic Radio-nuclide No.		Class	ALI (μCi)	ALI (μCi)	DAC (μCi/ml)	Air (μCi/ml)	Water (μCi/ml)	Concentration (μCi/ml)
72	Hafnium-170	D, all compounds except those given for W	3E+3	6E+3	2E-6	8E-9	4E-5	4E-4
		W, oxides, hydroxides, carbides, and nitrates	-	5E+3	2E-6	6E-9	-	-
72	Hafnium-172	D, see ^{170}Hf	1E+3	9E+0	4E-9	-	2E-5	2E-4
				Bone surf				
			-	(2E+1)	-	3E-11	-	-
		W, see ^{170}Hf	-	4E+1	2E-8	-	-	-
				Bone surf				
			-	(6E+1)	-	8E-11	-	-
72	Hafnium-173	D, see ^{170}Hf	5E+3	1E+4	5E-6	2E-8	7E-5	7E-4
		W, see ^{170}Hf	-	1E+4	5E-6	2E-8	-	-
72	Hafnium-175	D, see ^{170}Hf	3E+3	9E+2	4E-7	-	4E-5	4E-4
				Bone surf				
			-	(1E+3)	-	1E-9	-	-
		W, see ^{170}Hf	-	1E+3	5E-7	2E-9	-	-
72	Hafnium-177m[2]	D, see ^{170}Hf	2E+4	6E+4	2E-5	8E-8	3E-4	3E-3
		W, see ^{170}Hf	-	9E+4	4E-5	1E-7	-	-
72	Hafnium-178m	D, see ^{170}Hf	3E+2	1E+0	5E-10	-	3E-6	3E-5
				Bone surf				
			-	(2E+0)	-	3E-12	-	-
		W, see ^{170}Hf	-	5E+0	2E-9	-	-	-
				Bone surf				
			-	(9E+0)	-	1E-11	-	-
72	Hafnium-179m	D, see ^{170}Hf	1E+3	3E+2	1E-7	-	1E-5	1E-4
				Bone surf				
			-	(6E+2)	-	8E-10	-	-
		W, see ^{170}Hf	-	6E+2	3E-7	8E-10	-	-
72	Hafnium-180m	D, see ^{170}Hf	7E+3	2E+4	9E-6	3E-8	1E-4	1E-3
		W, see ^{170}Hf	-	3E+4	1E-5	4E-8	-	-
72	Hafnium-181	D, see ^{170}Hf	1E+3	2E+2	7E-8	-	2E-5	2E-4
				Bone surf				
			-	(4E+2)	-	6E-10	-	-
		W, see ^{170}Hf	-	4E+2	2E-7	6E-10	-	-
72	Hafnium-182m[2]	D, see ^{170}Hf	4E+4	9E+4	4E-5	1E-7	5E-4	5E-3
		W, see ^{170}Hf	-	1E+5	6E-5	2E-7	-	-

			Table I Occupational Values			Table II Effluent Concentrations		Table III Releases to Sewers
			Col. 1	Col. 2	Col. 3	Col. 1	Col. 2	
			Oral Ingestion	INHALATION				Monthly Average
Atomic Radio-nuclide No.		Class	ALI (μCi)	ALI (μCi)	DAC (μCi/ml)	Air (μCi/ml)	Water (μCi/ml)	Concentration (μCi/ml)
72	Hafnium-182	D, see ^{170}Hf	2E+2	8E-1	3E-10	-	-	-
			Bone surf	Bone surf				
			(4E+2)	(2E+0)	-	2E-12	5E-6	5E-5
		W, see ^{170}Hf	-	3E+0	1E-9	-	-	-
				Bone surf				
			-	(7E+0)	-	1E-11	-	-
72	Hafnium-183[2]	D, see ^{170}Hf	2E+4	5E+4	2E-5	6E-8	3E-4	3E-3
		W, see ^{170}Hf	-	6E+4	2E-5	8E-8	-	-
73	Tantalum-172[2]	W, all compounds except those given for Y	4E+4	1E+5	5E-5	2E-7	5E-4	5E-3
		Y, elemental Ta, oxides, hydroxides, halides, carbides, nitrates, and nitrides	-	1E+5	4E-5	1E-7	-	-
73	Tantalum-173	W, see ^{172}Ta	7E+3	2E+4	8E-6	3E-8	9E-5	9E-4
		Y, see ^{172}Ta	-	2E+4	7E-6	2E-8	-	-
73	Tantalum-174[2]	W, see ^{172}Ta	3E+4	1E+5	4E-5	1E-7	4E-4	4E-3
		Y, see ^{172}Ta	-	9E+4	4E-5	1E-7	-	-
73	Tantalum-175	W, see ^{172}Ta	6E+3	2E+4	7E-6	2E-8	8E-5	8E-4
		Y, see ^{172}Ta	-	1E+4	6E-6	2E-8	-	-
73	Tantalum-176	W, see ^{172}Ta	4E+3	1E+4	5E-6	2E-8	5E-5	5E-4
		Y, see ^{172}Ta	-	1E+4	5E-6	2E-8	-	-
73	Tantalum-177	W, see ^{172}Ta	1E+4	2E+4	8E-6	3E-8	2E-4	2E-3
		Y, see ^{172}Ta	-	2E+4	7E-6	2E-8	-	-
73	Tantalum-178	W, see ^{172}Ta	2E+4	9E+4	4E-5	1E-7	2E-4	2E-3
		Y, see ^{172}Ta	-	7E+4	3E-5	1E-7	-	-
73	Tantalum-179	W, see ^{172}Ta	2E+4	5E+3	2E-6	8E-9	3E-4	3E-3
		Y, see ^{172}Ta	-	9E+2	4E-7	1E-9	-	-
73	Tantalum-180m	W, see ^{172}Ta	2E+4	7E+4	3E-5	9E-8	3E-4	3E-3
		Y, see ^{172}Ta	-	6E+4	2E-5	8E-8	-	-
73	Tantalum-180	W, see ^{172}Ta	1E+3	4E+2	2E-7	6E-10	2E-5	2E-4
		Y, see ^{172}Ta	-	2E+1	1E-8	3E-11	-	-
73	Tantalum-182m[2]	W, see ^{172}Ta	2E+5	5E+5	2E-4	8E-7	-	-
			St wall					
			(2E+5)	-	-	-	3E-3	3E-2
		Y, see ^{172}Ta	-	4E+5	2E-4	6E-7	-	-
73	Tantalum-182	W, see ^{172}Ta	8E+2	3E+2	1E-7	5E-10	1E-5	1E-4
		Y, see ^{172}Ta	-	1E+2	6E-8	2E-10	-	-
73	Tantalum-183	W, see ^{172}Ta	9E+2	1E+3	5E-7	2E-9	-	-
			LLI wall					
			(1E+3)	-	-	-	2E-5	2E-4
		Y, see ^{172}Ta	-	1E+3	4E-7	1E-9	-	-

			Table I Occupational Values			Table II Effluent Concentrations		Table III Releases to Sewers
			Col. 1	Col. 2	Col. 3	Col. 1	Col. 2	
			Oral Ingestion	INHALATION				Monthly Average
Atomic Radio-nuclide No.		Class	ALI (μCi)	ALI (μCi)	DAC (μCi/ml)	Air (μCi/ml)	Water (μCi/ml)	Concentration (μCi/ml)
73	Tantalum-184	W, see ^{172}Ta	2E+3	5E+3	2E-6	8E-9	3E-5	3E-4
		Y, see ^{172}Ta	-	5E+3	2E-6	7E-9	-	-
73	Tantalum-185[2]	W, see ^{172}Ta	3E+4	7E+4	3E-5	1E-7	4E-4	4E-3
		Y, see ^{172}Ta	-	6E+4	3E-5	9E-8	-	-
73	Tantalum-186[2]	W, see ^{172}Ta	5E+4	2E+5	1E-4	3E-7	-	-
			St wall					
			(7E+4)	-	-	-	1E-3	1E-2
		Y, see ^{172}Ta	-	2E+5	9E-5	3E-7	-	-
74	Tungsten-176	D, all compounds	1E+4	5E+4	2E-5	7E-8	1E-4	1E-3
74	Tungsten-177	D, all compounds	2E+4	9E+4	4E-5	1E-7	3E-4	3E-3
74	Tungsten-178	D, all compounds	5E+3	2E+4	8E-6	3E-8	7E-5	7E-4
74	Tungsten-179[2]	D, all compounds	5E+5	2E+6	7E-4	2E-6	7E-3	7E-2
74	Tungsten-181	D, all compounds	2E+4	3E+4	1E-5	5E-8	2E-4	2E-3
74	Tungsten-185	D, all compounds	2E+3	7E+3	3E-6	9E-9	-	-
			LLI wall					
			(3E+3)	-	-	-	4E-5	4E-4
74	Tungsten-187	D, all compounds	2E+3	9E+3	4E-6	1E-8	3E-5	3E-4
74	Tungsten-188	D, all compounds	4E+2	1E+3	5E-7	2E-9	-	-
			LLI wall					
			(5E+2)	-	-	-	7E-6	7E-5
75	Rhenium-177[2]	D, all compounds except those given for W	9E+4	3E+5	1E-4	4E-7	-	-
			St wall					
			(1E+5)	-	-	-	2E-3	2E-2
		W, oxides, hydroxides, and nitrates	-	4E+5	1E-4	5E-7	-	-
75	Rhenium-178[2]	D, see ^{177}Re	7E+4	3E+5	1E-4	4E-7	-	-
			St wall					
			(1E+5)	-	-	-	1E-3	1E-2
		W, see ^{177}Re	-	3E+5	1E-4	4E-7	-	-
75	Rhenium-181	D, see ^{177}Re	5E+3	9E+3	4E-6	1E-8	7E-5	7E-4
		W, see ^{177}Re	-	9E+3	4E-6	1E-8	-	-
75	Rhenium-182	D, see ^{177}Re	7E+3	1E+4	5E-6	2E-8	9E-5	9E-4
	(12.7 h)	W, see ^{177}Re	-	2E+4	6E-6	2E-8	-	-
75	Rhenium-182	D, see ^{177}Re	1E+3	2E+3	1E-6	3E-9	2E-5	2E-4
	(64.0 h)	W, see ^{177}Re	-	2E+3	9E-7	3E-9	-	-
75	Rhenium-184m	D, see ^{177}Re	2E+3	3E+3	1E-6	4E-9	3E-5	3E-4
		W, see ^{177}Re	-	4E+2	2E-7	6E-10	-	-
75	Rhenium-184	D, see ^{177}Re	2E+3	4E+3	1E-6	5E-9	3E-5	3E-4
		W, see ^{177}Re	-	1E+3	6E-7	2E-9	-	-

			Table I Occupational Values			Table II Effluent Concentrations		Table III Releases to Sewers
			Col. 1	Col. 2	Col. 3	Col. 1	Col. 2	
			Oral Ingestion	INHALATION				Monthly Average
Atomic Radio-nuclide No.		Class	ALI (μCi)	ALI (μCi)	DAC (μCi/ml)	Air (μCi/ml)	Water (μCi/ml)	Concentration (μCi/ml)
75	Rhenium-186m	D, see ^{177}Re	1E+3	2E+3	7E-7	-	-	-
			St wall	St wall				
			(2E+3)	(2E+3)	-	3E-9	2E-5	2E-4
		W, see ^{177}Re	-	2E+2	6E-8	2E-10	-	-
75	Rhenium-186	D, see ^{177}Re	2E+3	3E+3	1E-6	4E-9	3E-5	3E-4
		W, see ^{177}Re	-	2E+3	7E-7	2E-9	-	-
75	Rhenium-187	D, see ^{177}Re	6E+5	8E+5	4E-4	-	8E-3	8E-2
			St wall					
			(9E+5)	-	1E-6	-	-	-
		W, see ^{177}Re	-	1E+5	4E-5	1E-7	-	-
75	Rhenium-188m[2]	D, see ^{177}Re	8E+4	1E+5	6E-5	2E-7	1E-3	1E-2
		W, see ^{177}Re	-	1E+5	6E-5	2E-7	-	-
75	Rhenium-188	D, see ^{177}Re	2E+3	3E+3	1E-6	4E-9	2E-5	2E-4
		W, see ^{177}Re	-	3E+3	1E-6	4E-9	-	-
75	Rhenium-189	D, see ^{177}Re	3E+3	5E+3	2E-6	7E-9	4E-5	4E-4
		W, see ^{177}Re	-	4E+3	2E-6	6E-9	-	-
76	Osmium-180[2]	D, all compounds except those given for W and Y	1E+5	4E+5	2E-4	5E-7	1E-3	1E-2
		W, halides and nitrates	-	5E+5	2E-4	7E-7	-	-
		Y, oxides and hydroxides	-	5E+5	2E-4	6E-7	-	-
76	Osmium-181[2]	D, see ^{180}Os	1E+4	4E+4	2E-5	6E-8	2E-4	2E-3
		W, see ^{180}Os	-	5E+4	2E-5	6E-8	-	-
		Y, see ^{180}Os	-	4E+4	2E-5	6E-8	-	-
76	Osmium-182	D, see ^{180}Os	2E+3	6E+3	2E-6	8E-9	3E-5	3E-4
		W, see ^{180}Os	-	4E+3	2E-6	6E-9	-	-
		Y, see ^{180}Os	-	4E+3	2E-6	6E-9	-	-
76	Osmium-185	D, see ^{180}Os	2E+3	5E+2	2E-7	7E-10	3E-5	3E-4
		W, see ^{180}Os	-	8E+2	3E-7	1E-9	-	-
		Y, see ^{180}Os	-	8E+2	3E-7	1E-9	-	-
76	Osmium-189m	D, see ^{180}Os	8E+4	2E+5	1E-4	3E-7	1E-3	1E-2
		W, see ^{180}Os	-	2E+5	9E-5	3E-7	-	-
		Y, see ^{180}Os	-	2E+5	7E-5	2E-7	-	-
76	Osmium-191m	D, see ^{180}Os	1E+4	3E+4	1E-5	4E-8	2E-4	2E-3
		W, see ^{180}Os	-	2E+4	8E-6	3E-8	-	-
		Y, see ^{180}Os	-	2E+4	7E-6	2E-8	-	-
76	Osmium-191	D, see ^{180}Os	2E+3	2E+3	9E-7	3E-9	-	-
			LLI wall					
			(3E+3)	-	-	-	3E-5	3E-4
		W, see ^{180}Os	-	2E+3	7E-7	2E-9	-	-
		Y, see ^{180}Os	-	1E+3	6E-7	2E-9	-	-

			Table I Occupational Values			Table II Effluent Concentrations		Table III Releases to Sewers
			Col. 1	Col. 2	Col. 3	Col. 1	Col. 2	
			Oral Ingestion	INHALATION				Monthly Average
Atomic Radio-nuclide No.		Class	ALI (µCi)	ALI (µCi)	DAC (µCi/ml)	Air (µCi/ml)	Water (µCi/ml)	Concentration (µCi/ml)
76	Osmium-193	D, see ^{180}Os	2E+3	5E+3	2E-6	6E-9	-	-
			LLI wall					
			(2E+3)	-	-	-	2E-5	2E-4
		W, see ^{180}Os	-	3E+3	1E-6	4E-9	-	-
		Y, see ^{180}Os	-	3E+3	1E-6	4E-9	-	-
76	Osmium-194	D, see ^{180}Os	4E+2	4E+1	2E-8	6E-11	-	-
			LLI wall					
			(6E+2)	-	-	-	8E-6	8E-5
		W, see ^{180}Os	-	6E+1	2E-8	8E-11	-	-
		Y, see ^{180}Os	-	8E+0	3E-9	1E-11	-	-
77	Iridium-182[2]	D, all compounds except those given for W and Y	4E+4	1E+5	6E-5	2E-7	-	-
			St wall					
			(4E+4)	-	-	-	6E-4	6E-3
		W, halides, nitrates, and metallic iridium	-	2E+5	6E-5	2E-7	-	-
		Y, oxides and hydroxides	-	1E+5	5E-5	2E-7	-	-
77	Iridium-184	D, see ^{182}Ir	8E+3	2E+4	1E-5	3E-8	1E-4	1E-3
		W, see ^{182}Ir	-	3E+4	1E-5	5E-8	-	-
		Y, see ^{182}Ir	-	3E+4	1E-5	4E-8	-	-
77	Iridium-185	D, see ^{182}Ir	5E+3	1E+4	5E-6	2E-8	7E-5	7E-4
		W, see ^{182}Ir	-	1E+4	5E-6	2E-8	-	-
		Y, see ^{182}Ir	-	1E+4	4E-6	1E-8	-	-
77	Iridium-186	D, see ^{182}Ir	2E+3	8E+3	3E-6	1E-8	3E-5	3E-4
		W, see ^{182}Ir	-	6E+3	3E-6	9E-9	-	-
		Y, see ^{182}Ir	-	6E+3	2E-6	8E-9	-	-
77	Iridium-187	D, see ^{182}Ir	1E+4	3E+4	1E-5	5E-8	1E-4	1E-3
		W, see ^{182}Ir	-	3E+4	1E-5	4E-8	-	-
		Y, see ^{182}Ir	-	3E+4	1E-5	4E-8	-	-
77	Iridium-188	D, see ^{182}Ir	2E+3	5E+3	2E-6	6E-9	3E-5	3E-4
		W, see ^{182}Ir	-	4E+3	1E-6	5E-9	-	-
		Y, see ^{182}Ir	-	3E+3	1E-6	5E-9	-	-
77	Iridium-189	D, see ^{182}Ir	5E+3	5E+3	2E-6	7E-9	-	-
			LLI wall					
			(5E+3)	-	-	-	7E-5	7E-4
		W, see ^{182}Ir	-	4E+3	2E-6	5E-9	-	-
		Y, see ^{182}Ir	-	4E+3	1E-6	5E-9	-	-
77	Iridium-190m[2]	D, see ^{182}Ir	2E+5	2E+5	8E-5	3E-7	2E-3	2E-2
		W, see ^{182}Ir	-	2E+5	9E-5	3E-7	-	-
		Y, see ^{182}Ir	-	2E+5	8E-5	3E-7	-	-

			Table I Occupational Values			Table II Effluent Concentrations		Table III Releases to Sewers
			Col. 1	Col. 2	Col. 3	Col. 1	Col. 2	
			Oral Ingestion	INHALATION				Monthly Average
Atomic Radio-nuclide No.		Class	ALI (μCi)	ALI (μCi)	DAC (μCi/ml)	Air (μCi/ml)	Water (μCi/ml)	Concentration (μCi/ml)
77	Iridium-190	D, see ^{182}Ir	1E+3	9E+2	4E-7	1E-9	1E-5	1E-4
		W, see ^{182}Ir	-	1E+3	4E-7	1E-9	-	-
		Y, see ^{182}Ir	-	9E+2	4E-7	1E-9	-	-
77	Iridium-192m	D, see ^{182}Ir	3E+3	9E+1	4E-8	1E-10	4E-5	4E-4
		W, see ^{182}Ir	-	2E+2	9E-8	3E-10	-	-
		Y, see ^{182}Ir	-	2E+1	6E-9	2E-11	-	-
77	Iridium-192	D, see ^{182}Ir	9E+2	3E+2	1E-7	4E-10	1E-5	1E-4
		W, see ^{182}Ir	-	4E+2	2E-7	6E-10	-	-
		Y, see ^{182}Ir	-	2E+2	9E-8	3E-10	-	-
77	Iridium-194m	D, see ^{182}Ir	6E+2	9E+1	4E-8	1E-10	9E-6	9E-5
		W, see ^{182}Ir	-	2E+2	7E-8	2E-10	-	-
		Y, see ^{182}Ir	-	1E+2	4E-8	1E-10	-	-
77	Iridium-194	D, see ^{182}Ir	1E+3	3E+3	1E-6	4E-9	1E-5	1E-4
		W, see ^{182}Ir	-	2E+3	9E-7	3E-9	-	-
		Y, see ^{182}Ir	-	2E+3	8E-7	3E-9	-	-
77	Iridium-195m	D, see ^{182}Ir	8E+3	2E+4	1E-5	3E-8	1E-4	1E-3
		W, see ^{182}Ir	-	3E+4	1E-5	4E-8	-	-
		Y, see ^{182}Ir	-	2E+4	9E-6	3E-8	-	-
77	Iridium-195	D, see ^{182}Ir	1E+4	4E+4	2E-5	6E-8	2E-4	2E-3
		W, see ^{182}Ir	-	5E+4	2E-5	7E-8	-	-
		Y, see ^{182}Ir	-	4E+4	2E-5	6E-8	-	-
78	Platinum-186	D, all compounds	1E+4	4E+4	2E-5	5E-8	2E-4	2E-3
78	Platinum-188	D, all compounds	2E+3	2E+3	7E-7	2E-9	2E-5	2E-4
78	Platinum-189	D, all compounds	1E+4	3E+4	1E-5	4E-8	1E-4	1E-3
78	Platinum-191	D, all compounds	4E+3	8E+3	4E-6	1E-8	5E-5	5E-4
78	Platinum-193m	D, all compounds	3E+3	6E+3	3E-6	8E-9	-	-
			LLI wall (3E+4)	-	-	-	4E-5	4E-4
78	Platinum-193	D, all compounds	4E+4	2E+4	1E-5	3E-8	-	-
			LLI wall (5E+4)	-	-	-	6E-4	6E-3
78	Platinum-195m	D, all compounds	2E+3	4E+3	2E-6	6E-9	-	-
			LLI wall (2E+3)	-	-	-	3E-5	3E-4
78	Platinum-197m[2]	D, all compounds	2E+4	4E+4	2E-5	6E-8	2E-4	2E-3
78	Platinum-197	D, all compounds	3E+3	1E+4	4E-6	1E-8	4E-5	4E-4
78	Platinum-199[2]	D, all compounds	5E+4	1E+5	6E-5	2E-7	7E-4	7E-3
78	Platinum-200	D, all compounds	1E+3	3E+3	1E-6	5E-9	2E-5	2E-4

			Table I Occupational Values			Table II Effluent Concentrations		Table III Releases to Sewers
			Col. 1	Col. 2	Col. 3	Col. 1	Col. 2	
			Oral Ingestion	INHALATION				Monthly Average
Atomic Radio-nuclide No.		Class	ALI (µCi)	ALI (µCi)	DAC (µCi/ml)	Air (µCi/ml)	Water (µCi/ml)	Concentration (µCi/ml)
79	Gold-193	D, all compounds except those given for W and Y	9E+3	3E+4	1E-5	4E-8	1E-4	1E-3
		W, halides and nitrates	-	2E+4	9E-6	3E-8	-	-
		Y, oxides and hydroxides	-	2E+4	8E-6	3E-8	-	-
79	Gold-194	D, see ^{193}Au	3E+3	8E+3	3E-6	1E-8	4E-5	4E-4
		W, see ^{193}Au	-	5E+3	2E-6	8E-9	-	-
		Y, see ^{193}Au	-	5E+3	2E-6	7E-9	-	-
79	Gold-195	D, see ^{193}Au	5E+3	1E+4	5E-6	2E-8	7E-5	7E-4
		W, see ^{193}Au	-	1E+3	6E-7	2E-9	-	-
		Y, see ^{193}Au	-	4E+2	2E-7	6E-10	-	-
79	Gold-198m	D, see ^{193}Au	1E+3	3E+3	1E-6	4E-9	1E-5	1E-4
		W, see ^{193}Au	-	1E+3	5E-7	2E-9	-	-
		Y, see ^{193}Au	-	1E+3	5E-7	2E-9	-	-
79	Gold-198	D, see ^{193}Au	1E+3	4E+3	2E-6	5E-9	2E-5	2E-4
		W, see ^{193}Au	-	2E+3	8E-7	3E-9	-	-
		Y, see ^{193}Au	-	2E+3	7E-7	2E-9	-	-
79	Gold-199	D, see ^{193}Au	3E+3	9E+3	4E-6	1E-8	-	-
			LLI wall (3E+3)	-	-	-	4E-5	4E-4
		W, see ^{193}Au	-	4E+3	2E-6	6E-9	-	-
		Y, see ^{193}Au	-	4E+3	2E-6	5E-9	-	-
79	Gold-200m	D, see ^{193}Au	1E+3	4E+3	1E-6	5E-9	2E-5	2E-4
		W, see ^{193}Au	-	3E+3	1E-6	4E-9	-	-
		Y, see ^{193}Au	-	2E+4	1E-6	3E-9	-	-
79	Gold-200[2]	D, see ^{193}Au	3E+4	6E+4	3E-5	9E-8	4E-4	4E-3
		W, see ^{193}Au	-	8E+4	3E-5	1E-7	-	-
		Y, see ^{193}Au	-	7E+4	3E-5	1E-7	-	-
79	Gold-201[2]	D, see ^{193}Au	7E+4	2E+5	9E-5	3E-7	-	-
			St wall (9E+4)	-	-	-	1E-3	1E-2
		W, see ^{193}Au	-	2E+5	1E-4	3E-7	-	-
		Y, see ^{193}Au	-	2E+5	9E-5	3E-7	-	-
80	Mercury-193m	Vapor	-	8E+3	4E-6	1E-8	-	-
		Organic D	4E+3	1E+4	5E-6	2E-8	6E-5	6E-4
		D, sulfates	3E+3	9E+3	4E-6	1E-8	4E-5	4E-4
		W, oxides, hydroxides, halides, nitrates, and sulfides	-	8E+3	3E-6	1E-8	-	-
80	Mercury-193	Vapor	-	3E+4	1E-5	4E-8	-	-
		Organic D	2E+4	6E+4	3E-5	9E-8	3E-4	3E-3
		D, see ^{193m}Hg	2E+4	4E+4	2E-5	6E-8	2E-4	2E-3
		W, see ^{193m}Hg	-	4E+4	2E-5	6E-8	-	-

			Table I Occupational Values			Table II Effluent Concentrations		Table III Releases to Sewers
			Col. 1	Col. 2	Col. 3	Col. 1	Col. 2	
			Oral Ingestion	INHALATION				Monthly Average
Atomic Radio-nuclide No.		Class	ALI (µCi)	ALI (µCi)	DAC (µCi/ml)	Air (µCi/ml)	Water (µCi/ml)	Concentration (µCi/ml)
80	Mercury-194	Vapor	-	3E+1	1E-8	4E-11	-	-
		Organic D	2E+1	3E+1	1E-8	4E-11	2E-7	2E-6
		D, see ^{193m}Hg	8E+2	4E+1	2E-8	6E-11	1E-5	1E-4
		W, see ^{193m}Hg	-	1E+2	5E-8	2E-10	-	-
80	Mercury-195m	Vapor	-	4E+3	2E-6	6E-9	-	-
		Organic D	3E+3	6E+3	3E-6	8E-9	4E-5	4E-4
		D, see ^{193m}Hg	2E+3	5E+3	2E-6	7E-9	3E-5	3E-4
		W, see ^{193m}Hg	-	4E+3	2E-6	5E-9	-	-
80	Mercury-195	Vapor	-	3E+4	1E-5	4E-8	-	-
		Organic D	2E+4	5E+4	2E-5	6E-8	2E-4	2E-3
		D, see ^{193m}Hg	1E+4	4E+4	1E-5	5E-8	2E-4	2E-3
		W, see ^{193m}Hg	-	3E+4	1E-5	5E-8	-	-
80	Mercury-197m	Vapor	-	5E+3	2E-6	7E-9	-	-
		Organic D	4E+3	9E+3	4E-6	1E-8	5E-5	5E-4
		D, see ^{193m}Hg	3E+3	7E+3	3E-6	1E-8	4E-5	4E-4
		W, see ^{193m}Hg	-	5E+3	2E-6	7E-9	-	-
80	Mercury-197	Vapor	-	8E+3	4E-6	1E-8	-	-
		Organic D	7E+3	1E+4	6E-6	2E-8	9E-5	9E-4
		D, see ^{193m}Hg	6E+3	1E+4	5E-6	2E-8	8E-5	8E-4
		W, see ^{193m}Hg	-	9E+3	4E-6	1E-8	-	-
80	Mercury-199m[2]	Vapor	-	8E+4	3E-5	1E-7	-	-
		Organic D	6E+4	2E+5	7E-5	2E-7	-	-
			St wall (1E+5)	-	-	-	1E-3	1E-2
		D, see ^{193m}Hg	6E+4	1E+5	6E-5	2E-7	8E-4	8E-3
		W, see ^{193m}Hg	-	2E+5	7E-5	2E-7	-	-
80	Mercury-203	Vapor	-	8E+2	4E-7	1E-9	-	-
		Organic D	5E+2	8E+2	3E-7	1E-9	7E-6	7E-5
		D, see ^{193m}Hg	2E+3	1E+3	5E-7	2E-9	3E-5	3E-4
		W, see ^{193m}Hg	-	1E+3	5E-7	2E-9	-	-
81	Thallium-194m[2]	D, all compounds	5E+4	2E+5	6E-5	2E-7	-	-
			St wall (7E+4)	-	-	-	1E-3	1E-2
81	Thallium-194[2]	D, all compounds	3E+5	6E+5	2E-4	8E-7	-	-
			St wall (3E+5)	-	-	-	4E-3	4E-2
81	Thallium-195[2]	D, all compounds	6E+4	1E+5	5E-5	2E-7	9E-4	9E-3
81	Thallium-197	D, all compounds	7E+4	1E+5	5E-5	2E-7	1E-3	1E-2
81	Thallium-198m[2]	D, all compounds	3E+4	5E+4	2E-5	8E-8	4E-4	4E-3
81	Thallium-198	D, all compounds	2E+4	3E+4	1E-5	5E-8	3E-4	3E-3
81	Thallium-199	D, all compounds	6E+4	8E+4	4E-5	1E-7	9E-4	9E-3
81	Thallium-200	D, all compounds	8E+3	1E+4	5E-6	2E-8	1E-4	1E-3
81	Thallium-201	D, all compounds	2E+4	2E+4	9E-6	3E-8	2E-4	2E-3
81	Thallium-202	D, all compounds	4E+3	5E+3	2E-6	7E-9	5E-5	5E-4

			Table I Occupational Values			Table II Effluent Concentrations		Table III Releases to Sewers
			Col. 1	Col. 2	Col. 3	Col. 1	Col. 2	
			Oral Ingestion	INHALATION				Monthly Average
Atomic Radio-nuclide No.		Class	ALI (μCi)	ALI (μCi)	DAC (μCi/ml)	Air (μCi/ml)	Water (μCi/ml)	Concentration (μCi/ml)
81	Thallium-204	D, all compounds	2E+3	2E+3	9E-7	3E-9	2E-5	2E-4
82	Lead-195m[2]	D, all compounds	6E+4	2E+5	8E-5	3E-7	8E-4	8E-3
82	Lead-198	D, all compounds	3E+4	6E+4	3E-5	9E-8	4E-4	4E-3
82	Lead-199[2]	D, all compounds	2E+4	7E+4	3E-5	1E-7	3E-4	3E-3
82	Lead-200	D, all compounds	3E+3	6E+3	3E-6	9E-9	4E-5	4E-4
82	Lead-201	D, all compounds	7E+3	2E+4	8E-6	3E-8	1E-4	1E-3
82	Lead-202m	D, all compounds	9E+3	3E+4	1E-5	4E-8	1E-4	1E-3
82	Lead-202	D, all compounds	1E+2	5E+1	2E-8	7E-11	2E-6	2E-5
82	Lead-203	D, all compounds	5E+3	9E+3	4E-6	1E-8	7E-5	7E-4
82	Lead-205	D, all compounds	4E+3	1E+3	6E-7	2E-9	5E-5	5E-4
82	Lead-209	D, all compounds	2E+4	6E+4	2E-5	8E-8	3E-4	3E-3
82	Lead-210	D, all compounds	6E-1 Bone surf	2E-1 Bone surf	1E-10	-	-	-
			(1E+0)	(4E-1)	-	6E-13	1E-8	1E-7
82	Lead-211[2]	D, all compounds	1E+4	6E+2	3E-7	9E-10	2E-4	2E-3
82	Lead-212	D, all compounds	8E+1 Bone surf	3E+1	1E-8	5E-11	-	-
			(1E+2)	-	-	-	2E-6	2E-5
82	Lead-214[2]	D, all compounds	9E+3	8E+2	3E-7	1E-9	1E-4	1E-3
83	Bismuth-200[2]	D, nitrates	3E+4	8E+4	4E-5	1E-7	4E-4	4E-3
		W, all other compounds	-	1E+5	4E-5	1E-7	-	-
83	Bismuth-201[2]	D, see ^{200}Bi	1E+4	3E+4	1E-5	4E-8	2E-4	2E-3
		W, see ^{200}Bi	-	4E+4	2E-5	5E-8	-	-
83	Bismuth-202[2]	D, see ^{200}Bi	1E+4	4E+4	2E-5	6E-8	2E-4	2E-3
		W, see ^{200}Bi	-	8E+4	3E-5	1E-7	-	-
83	Bismuth-203	D, see ^{200}Bi	2E+3	7E+3	3E-6	9E-9	3E-5	3E-4
		W, see ^{200}Bi	-	6E+3	3E-6	9E-9	-	-
83	Bismuth-205	D, see ^{200}Bi	1E+3	3E+3	1E-6	3E-9	2E-5	2E-4
		W, see ^{200}Bi	-	1E+3	5E-7	2E-9	-	-
83	Bismuth-206	D, see ^{200}Bi	6E+2	1E+3	6E-7	2E-9	9E-6	9E-5
		W, see ^{200}Bi	-	9E+2	4E-7	1E-9	-	-
83	Bismuth-207	D, see ^{200}Bi	1E+3	2E+3	7E-7	2E-9	1E-5	1E-4
		W, see ^{200}Bi	-	4E+2	1E-7	5E-10	-	-
83	Bismuth-210m	D, see ^{200}Bi	4E+1	5E+0	2E-9	-	-	-
			Kidneys	Kidneys				
			(6E+1)	(6E+0)	-	9E-12	8E-7	8E-6
		W, see ^{200}Bi	-	7E-1	3E-10	9E-13	-	-
83	Bismuth-210	D, see ^{200}Bi	8E+2	2E+2	1E-7	-	1E-5	1E-4
				Kidneys				
			-	(4E+2)	-	5E-10	-	-
		W, see ^{200}Bi	-	3E+1	1E-8	4E-11	-	-

			Table I Occupational Values			Table II Effluent Concentrations		Table III Releases to Sewers
			Col. 1	Col. 2	Col. 3	Col. 1	Col. 2	
			Oral Ingestion	INHALATION				Monthly Average
Atomic Radio-nuclide No.		Class	ALI (μCi)	ALI (μCi)	DAC (μCi/ml)	Air (μCi/ml)	Water (μCi/ml)	Concentration (μCi/ml)
83	Bismuth-212[2]	D, see ^{200}Bi	5E+3	2E+2	1E-7	3E-10	7E-5	7E-4
		W, see ^{200}Bi	-	3E+2	1E-7	4E-10	-	-
83	Bismuth-213[2]	D, see ^{200}Bi	7E+3	3E+2	1E-7	4E-10	1E-4	1E-3
		W, see ^{200}Bi	-	4E+2	1E-7	5E-10	-	-
83	Bismuth-214[2]	D, see ^{200}Bi	2E+4	8E+2	3E-7	1E-9	-	-
			St wall					
			(2E+4)	-	-	-	3E-4	3E-3
		W, see ^{200}Bi	-	9E-2	4E-7	1E-9	-	-
84	Polonium-203[2]	D, all compounds except those given for W	3E+4	6E+4	3E-5	9E-8	3E-4	3E-3
		W, oxides, hydroxides, and nitrates	-	9E+4	4E-5	1E-7	-	-
84	Polonium-205[2]	D, see ^{203}Po	2E+4	4E+4	2E-5	5E-8	3E-4	3E-3
		W, see ^{203}Po	-	7E+4	3E-5	1E-7	-	-
84	Polonium-207	D, see ^{203}Po	8E+3	3E+4	1E-5	3E-8	1E-4	1E-3
		W, see ^{203}Po	-	3E+4	1E-5	4E-8	-	-
84	Polonium-210	D, see ^{203}Po	3E+0	6E-1	3E-10	9E-13	4E-8	4E-7
		W, see ^{203}Po	-	6E-1	3E-10	9E-13	-	-
85	Astatine-207[2]	D, halides	6E+3	3E+3	1E-6	4E-9	8E-5	8E-4
		W	-	2E+3	9E-7	3E-9	-	-
85	Astatine-211	D, halides	1E+2	8E+1	3E-8	1E-10	2E-6	2E-5
		W	-	5E+1	2E-8	8E-11	-	-
86	Radon-220	With daughters removed	-	2E+4	7E-6	2E-8	-	-
		With daughters present	-	2E+1	9E-9	3E-11	-	-
				(or 12 working level months)	(or 1.0 working level)			
86	Radon-222	With daughters removed	-	1E+4	4E-6	1E-8	-	-
		With daughters present	-	1E+2	3E-8	1E-10	-	-
				(or 4 working level months)	(or 0.33 working level)			
87	Francium-222[2]	D, all compounds	2E+3	5E+2	2E-7	6E-10	3E-5	3E-4
87	Francium-223[2]	D, all compounds	6E+2	8E+2	3E-7	1E-9	8E-6	8E-5
88	Radium-223	W, all compounds	5E+0	7E-1	3E-10	9E-13	-	-
			Bone surf					
			(9E+0)	-	-	-	1E-7	1E-6

			Table I Occupational Values			Table II Effluent Concentrations		Table III Releases to Sewers
			Col. 1	Col. 2	Col. 3	Col. 1	Col. 2	
			Oral Ingestion	INHALATION				Monthly Average
Atomic Radio-nuclide No.		Class	ALI (µCi)	ALI (µCi)	DAC (µCi/ml)	Air (µCi/ml)	Water (µCi/ml)	Concentration (µCi/ml)
88	Radium-224	W, all compounds	8E+0	2E+0	7E-10	2E-12	-	-
			Bone surf					
			(2E+1)	-	-	-	2E-7	2E-6
88	Radium-225	W, all compounds	8E+0	7E-1	3E-10	9E-13	-	-
			Bone surf					
			(2E+1)	-	-	-	2E-7	2E-6
88	Radium-226	W, all compounds	2E+0	6E-1	3E-10	9E-13	-	-
			Bone surf					
			(5E+0)	-	-	-	6E-8	6E-7
88	Radium-227[2]	W, all compounds	2E+4	1E+4	6E-6	-	-	-
			Bone surf	Bone surf				
			(2E+4)	(2E+4)	-	3E-8	3E-4	3E-3
88	Radium-228	W, all compounds	2E+0	1E+0	5E-10	2E-12	-	-
			Bone surf					
			(4E+0)	-	-	-	6E-8	6E-7
89	Actinium-224	D, all compounds except those given for W and Y	2E+3 LLI wall	3E+1 Bone surf	1E-8	-	-	-
			(2E+3)	(4E+1)	-	5E-11	3E-5	3E-4
		W, halides and nitrates	-	5E+1	2E-8	7E-11	-	-
		Y, oxides and hydroxides	-	5E+1	2E-8	6E-11	-	-
89	Actinium-225	D, see ^{224}Ac	5E+1 LLI wall	3E-1 Bone surf	1E-10	-	-	-
			(5E+1)	(5E-1)	-	7E-13	7E-7	7E-6
		W, see ^{224}Ac	-	6E-1	3E-10	9E-13	-	-
		Y, see ^{224}Ac	-	6E-1	3E-10	9E-13	-	-
89	Actinium-226	D, see ^{224}Ac	1E+2 LLI wall	3E+0 Bone surf	1E-9	-	-	-
			(1E+2)	(4E+0)	-	5E-12	2E-6	2E-5
		W, see ^{224}Ac	-	5E+0	2E-9	7E-12	-	-
		Y, see ^{224}Ac	-	5E+0	2E-9	6E-12	-	-

			Table I Occupational Values			Table II Effluent Concentrations		Table III Releases to Sewers
			Col. 1	Col. 2	Col. 3	Col. 1	Col. 2	
			Oral Ingestion	INHALATION				Monthly Average
Atomic Radio-nuclide No.		Class	ALI (μCi)	ALI (μCi)	DAC (μCi/ml)	Air (μCi/ml)	Water (μCi/ml)	Concentration (μCi/ml)
89	Actinium-227	D, see ^{224}Ac	2E-1 Bone surf	4E-4 Bone surf	2E-13	-	-	-
			(4E-1)	(8E-4)	-	1E-15	5E-9	5E-8
		W, see ^{224}Ac	-	2E-3 Bone surf	7E-13	-	-	-
			-	(3E-3)	-	4E-15	-	-
		Y, see ^{224}Ac	-	4E-3	2E-12	6E-15	-	-
89	Actinium-228	D, see ^{224}Ac	2E+3	9E+0 Bone surf	4E-9	-	3E-5	3E-4
			-	(2E+1)	-	2E-11	-	-
		W, see ^{224}Ac	-	4E+1 Bone surf	2E-8	-	-	-
			-	(6E+1)	-	8E-11	-	-
		Y, see ^{224}Ac	-	4E+1	2E-8	6E-11	-	-
90	Thorium-226[2]	W, all compounds except those given for Y	5E+3 St wall	2E+2	6E-8	2E-10	-	-
			(5E+3)	-	-	-	7E-5	7E-4
		Y, oxides and hydroxides	-	1E+2	6E-8	2E-10	-	-
90	Thorium-227	W, see ^{226}Th	1E+2	3E-1	1E-10	5E-13	2E-6	2E-5
		Y, see ^{226}Th	-	3E-1	1E-10	5E-13	-	-
90	Thorium-228	W, see ^{226}Th	6E+0 Bone surf	1E-2 Bone surf	4E-12	-	-	-
			(1E+1)	(2E-2)	-	3E-14	2E-7	2E-6
		Y, see ^{226}Th	-	2E-2	7E-12	2E-14	-	-
90	Thorium-229	W, see ^{226}Th	6E-1 Bone surf	9E-4 Bone surf	4E-13	-	-	-
			(1E+0)	(2E-3)	-	3E-15	2E-8	2E-7
		Y, see ^{226}Th	-	2E-3 Bone surf	1E-12	-	-	-
			-	(3E-3)	-	4E-15	-	-
90	Thorium-230	W, see ^{226}Th	4E+0 Bone surf	6E-3 Bone surf	3E-12	-	-	-
			(9E+0)	(2E-2)	-	2E-14	1E-7	1E-6
		Y, see ^{226}Th	-	2E-2 Bone surf	6E-12	-	-	-
			-	(2E-2)	-	3E-14	-	-
90	Thorium-231	W, see ^{226}Th	4E+3	6E+3	3E-6	9E-9	5E-5	5E-4
		Y, see ^{226}Th	-	6E+3	3E-6	9E-9	-	-

			Table I Occupational Values			Table II Effluent Concentrations		Table III Releases to Sewers
			Col. 1	Col. 2	Col. 3	Col. 1	Col. 2	
			Oral Ingestion	INHALATION				Monthly Average
Atomic Radio-nuclide No.		Class	ALI (µCi)	ALI (µCi)	DAC (µCi/ml)	Air (µCi/ml)	Water (µCi/ml)	Concentration (µCi/ml)
90	Thorium-232	W, see ^{226}Th	7E-1	1E-3	5E-13	-	-	-
			Bone surf	Bone surf				
			(2E+0)	(3E-3)	-	4E-15	3E-8	3E-7
		Y, see ^{226}Th	-	3E-3	1E-12	-	-	-
				Bone surf				
			-	(4E-3)	-	6E-15	-	-
90	Thorium-234	W, see ^{226}Th	3E+2	2E+2	8E-8	3E-10	-	-
			LLI wall					
			(4E+2)	-	-	-	5E-6	5E-5
		Y, see ^{226}Th	-	2E+2	6E-8	2E-10	-	-
91	Protactinium-227[2]	W, all compounds except those given for Y	4E+3	1E+2	5E-8	2E-10	5E-5	5E-4
		Y, oxides and hydroxides	-	1E+2	4E-8	1E-10	-	-
91	Protactinium-228	W, see ^{227}Pa	1E+3	1E+1	5E-9	-	2E-5	2E-4
				Bone surf				
			-	(2E+1)	-	3E-11	-	-
		Y, see ^{227}Pa	-	1E+1	5E-9	2E-11	-	-
91	Protactinium-230	W, see ^{227}Pa	6E+2	5E+0	2E-9	7E-12	-	-
			Bone surf					
			(9E+2)	-	-	-	1E-5	1E-4
		Y, see ^{227}Pa	-	4E+0	1E-9	5E-12	-	-
91	Protactinium-231	W, see ^{227}Pa	2E-1	2E-3	6E-13	-	-	-
			Bone surf	Bone surf				
			(5E-1)	(4E-3)	-	6E-15	6E-9	6E-8
		Y, see ^{227}Pa	-	4E-3	2E-12	-	-	-
				Bone surf				
			-	(6E-3)	-	8E-15	-	-
91	Protactinium-232	W, see ^{227}Pa	1E+3	2E+1 Bone surf	9E-9	-	2E-5	2E-4
			-	(6E+1)	-	8E-11	-	-
		Y, see ^{227}Pa	-	6E+1 Bone surf	2E-8	-	-	-
			-	(7E+1)	-	1E-10	-	-
91	Protactinium-233	W, see ^{227}Pa	1E+3 LLI wall	7E+2	3E-7	1E-9	-	-
			(2E+3)	-	-	-	E-5	2E-4
		Y, see ^{227}Pa	-	6E+2	2E-7	8E-10	-	-

			Table I Occupational Values			Table II Effluent Concentrations		Table III Releases to Sewers
			Col. 1	Col. 2	Col. 3	Col. 1	Col. 2	
			Oral Ingestion	INHALATION				Monthly Average
Atomic Radio-nuclide No.		Class	ALI (µCi)	ALI (µCi)	DAC (µCi/ml)	Air (µCi/ml)	Water (µCi/ml)	Concentration (µCi/ml)
91	Protactinium-234	W, see ^{227}Pa	2E+3	8E+3	3E-6	1E-8	3E-5	3E-4
		Y, see ^{227}Pa	-	7E+3	3E-6	9E-9	-	-
92	Uranium-230	D, UF, UOF, UO(NO)	4E+0	4E-1	2E-10	-	-	-
			Bone surf	Bone surf				
			(6E+0)	(6E-1)	-	8E-13	8E-8	8E-7
		W, UO, UF, UCl	-	4E-1	1E-10	5E-13	-	-
		Y, UO, UO	-	3E-1	1E-10	4E-13	-	-
92	Uranium-231	D, see ^{230}U	5E+3 LLI wall	8E+3	3E-6	1E-8	-	-
			(4E+3)	-	-	-	6E-5	6E-4
		W, see ^{230}U	-	6E+3	2E-6	8E-9	-	-
		Y, see ^{230}U	-	5E+3	2E-6	6E-9	-	-
92	Uranium-232	D, see ^{230}U	2E+0	2E-1	9E-11	-	-	-
			Bone surf	Bone surf				
			(4E+0)	(4E-1)	-	6E-13	6E-8	6E-7
		W, see ^{230}U	-	4E-1	2E-10	5E-13	-	-
		Y, see ^{230}U	-	8E-3	3E-12	1E-14	-	-
92	Uranium-233	D, see ^{230}U	1E+1	1E+0	5E-10	-	-	-
			Bone surf	Bone surf				
			(2E+1)	(2E+0)	-	3E-12	3E-7	3E-6
		W, see ^{230}U	-	7E-1	3E-10	1E-12	-	-
		Y, see ^{230}U	-	4E-2	2E-11	5E-14	-	-
92	Uranium-234[3]	D, see ^{230}U	1E+1	1E+0	5E-10	-	-	-
			Bone surf	Bone surf				
			(2E+1)	(2E+0)	-	3E-12	3E-7	3E-6
		W, see ^{230}U	-	7E-1	3E-10	1E-12	-	-
		Y, see ^{230}U	-	4E-2	2E-11	5E-14	-	-
92	Uranium-235[3]	D, see ^{230}U	1E+1	1E+0	6E-10	-	-	-
			Bone surf	Bone surf				
			(2E+1)	(2E+0)	-	3E-12	3E-7	3E-6
		W, see ^{230}U	-	8E-1	3E-10	1E-12	-	-
		Y, see ^{230}U	-	4E-2	2E-11	6E-14	-	-
92	Uranium-236	D, see ^{230}U	1E+1 Bone surf	1E+0 Bone surf	5E-10	-	-	-
			(2E+1)	(2E+0)	-	3E-12	3E-7	3E-6
		W, see ^{230}U	-	8E-1	3E-10	1E-12	-	-
		Y, see ^{230}U	-	4E-2	2E-11	6E-14	-	-

			Table I Occupational Values			Table II Effluent Concentrations		Table III Releases to Sewers
			Col. 1	Col. 2	Col. 3	Col. 1	Col. 2	
			Oral Ingestion	INHALATION				Monthly Average
Atomic Radio-nuclide No.		Class	ALI (µCi)	ALI (µCi)	DAC (µCi/ml)	Air (µCi/ml)	Water (µCi/ml)	Concentration (µCi/ml)
92	Uranium-237	D, see ^{230}U	2E+3 LLI wall	3E+3	1E-6	4E-9	-	-
			(2E+3)	-	-	-	3E-5	3E-4
		W, see ^{230}U	-	2E+3	7E-7	2E-9	-	-
		Y, see ^{230}U	-	2E+3	6E-7	2E-9	-	-
92	Uranium-238[3]	D, see ^{230}U	1E+1 Bone surf	1E+0 Bone surf	6E-10	-	-	-
			(2E+1)	(2E+0)	-	3E-12	3E-7	3E-6
		W, see ^{230}U	-	8E-1	3E-10	1E-12	-	-
		Y, see ^{230}U	-	4E-2	2E-11	6E-14	-	-
92	Uranium-239[2]	D, see ^{230}U	7E+4	2E+5	8E-5	3E-7	9E-4	9E-3
		W, see ^{230}U	-	2E+5	7E-5	2E-7	-	-
		Y, see ^{230}U	-	2E+5	6E-5	2E-7	-	-
92	Uranium-240	D, see ^{230}U	1E+3	4E+3	2E-6	5E-9	2E-5	2E-4
		W, see ^{230}U	-	3E+3	1E-6	4E-9	-	-
		Y, see ^{230}U	-	2E+3	1E-6	3E-9	-	-
92	Uranium-natural[3]	D, see ^{230}U	1E+1 Bone surf	1E+0 Bone surf	5E-10	-	-	-
			(2E+1)	(2E+0)	-	3E-12	3E-7	3E-6
		W, see ^{230}U	-	8E-1	3E-10	9E-13	-	-
		Y, see ^{230}U	-	5E-2	2E-11	9E-14	-	-
93	Neptunium-232[2]	W, all compounds	1E+5	2E+3 Bone surf	7E-7	-	2E-3	2E-2
			-	(5E+2)	-	6E-9	-	-
93	Neptunium-233[2]	W, all compounds	8E+5	3E+6	1E-3	4E-6	1E-2	1E-1
93	Neptunium-234	W, all compounds	2E+3	3E+3	1E-6	4E-9	3E-5	3E-4
93	Neptunium-235	W, all compounds	2E+4 LLI wall	8E+2 Bone surf	3E-7	-	-	-
			(2E+4)	(1E+3)	-	2E-9	3E-4	3E-3
93	Neptunium-236 (1.15E+5 y)	W, all compounds	3E+0 Bone surf	2E-2 Bone surf	9E-12	-	-	-
			(6E+0)	(5E-2)	-	8E-14	9E-8	9E-7
93	Neptunium-236 (22.5 h)	W, all compounds	3E+3 Bone surf	3E+1 Bone surf	1E-8	-	-	-
			(4E+3)	(7E+1)	-	1E-10	5E-5	5E-4
93	Neptunium-237	W, all compounds	5E-1 Bone surf	4E-3 Bone surf	2E-12	-	-	-
			(1E+0)	(1E-2)	-	1E-14	2E-8	2E-7
93	Neptunium-238	W, all compounds	1E+3	6E+1 Bone surf	3E-8	-	2E-5	2E-4
			-	(2E+2)	-	2E-10	-	-

			Table I Occupational Values			Table II Effluent Concentrations		Table III Releases to Sewers
			Col. 1	Col. 2	Col. 3	Col. 1	Col. 2	
			Oral Ingestion	INHALATION				Monthly Average
Atomic Radio-nuclide No.		Class	ALI (µCi)	ALI (µCi)	DAC (µCi/ml)	Air (µCi/ml)	Water (µCi/ml)	Concentration (µCi/ml)
93	Neptunium-239	W, all compounds	2E+3 LLI wall	2E+3	9E-7	3E-9	-	-
			(2E+3)	-	-	-	2E-5	2E-4
93	Neptunium-240[2]	W, all compounds	2E+4	8E+4	3E-5	1E-7	3E-4	3E-3
94	Plutonium-234	W, all compounds except PuO	8E+3	2E+2	9E-8	3E-10	1E-4	1E-3
		Y, PuO	-	2E+2	8E-8	3E-10	-	-
94	Plutonium-235[2]	W, see ^{234}Pu	9E+5	3E+6	1E-3	4E-6	1E-2	1E-1
		Y, see ^{234}Pu	-	3E+6	1E-3	3E-6	-	-
94	Plutonium-236	W, see ^{234}Pu	2E+0 Bone surf	2E-2 Bone surf	8E-12	-	-	-
			(4E+0)	(4E-2)	-	5E-14	6E-8	6E-7
		Y, see ^{234}Pu	-	4E-2	2E-11	6E-14	-	-
94	Plutonium-237	W, see ^{234}Pu	1E+4	3E+3	1E-6	5E-9	2E-4	2E-3
		Y, see ^{234}Pu	-	3E+3	1E-6	4E-9	-	-
94	Plutonium-238	W, see ^{234}Pu	9E-1 Bone surf	7E-3 Bone surf	3E-12	-	-	-
			(2E+0)	(1E-2)	-	2E-14	2E-8	2E-7
		Y, see ^{234}Pu	-	2E-2	8E-12	2E-14	-	-
94	Plutonium-239	W, see ^{234}Pu	8E-1 Bone surf	6E-3 Bone surf	3E-12	-	-	-
			(1E+0)	(1E-2)	-	2E-14	2E-8	2E-7
		Y, see ^{234}Pu	-	2E-2 Bone surf	7E-12	-	-	-
			-	(2E-2)	-	2E-14	-	-
94	Plutonium-240	W, see ^{234}Pu	8E-1 Bone surf	6E-3 Bone surf	3E-12	-	-	-
			(1E+0)	(1E-2)	-	2E-14	2E-8	2E-7
		Y, see ^{234}Pu	-	2E-2 Bone surf	7E-12	-	-	-
			-	(2E-2)	-	2E-14	-	-
94	Plutonium-241	W, see ^{234}Pu	4E+1 Bone surf	3E-1 Bone surf	1E-10	-	-	-
			(7E+1)	(6E-1)	-	8E-13	1E-6	1E-5
		Y, see ^{234}Pu	-	8E-1 Bone surf	3E-10	-	-	-
			-	(1E+0)	-	1E-12	-	-

			Table I Occupational Values			Table II Effluent Concentrations		Table III Releases to Sewers
			Col. 1	Col. 2	Col. 3	Col. 1	Col. 2	
			Oral Ingestion	INHALATION				Monthly Average
Atomic Radio-nuclide No.		Class	ALI (µCi)	ALI (µCi)	DAC (µCi/ml)	Air (µCi/ml)	Water (µCi/ml)	Concentration (µCi/ml)
94	Plutonium-242	W, see ^{234}Pu	8E-1	7E-3	3E-12	-	-	-
			Bone surf	Bone surf				
			(1E+0)	(1E-2)	-	2E-14	2E-8	2E-7
		Y, see ^{234}Pu	-	2E-2 Bone surf	7E-12	-	-	-
			-	(2E-2)	-	2E-14	-	-
94	Plutonium-243	W, see ^{234}Pu	2E+4	4E+4	2E-5	5E-8	2E-4	2E-3
		Y, see ^{234}Pu	-	4E+4	2E-5	5E-8	-	-
94	Plutonium-244	W, see ^{234}Pu	8E-1	7E-3	3E-12	-	-	-
			Bone surf	Bone surf				
			(2E+0)	(1E-2)	-	2E-14	2E-8	2E-7
		Y, see ^{234}Pu	-	2E-2 Bone surf	7E-12	-	-	-
			-	(2E-2)	-	2E-14	-	-
94	Plutonium-245	W, see ^{234}Pu	2E+3	5E+3	2E-6	6E-9	3E-5	3E-4
		Y, see ^{234}Pu	-	4E+3	2E-6	6E-9	-	-
94	Plutonium-246	W, see ^{234}Pu	4E+2 LLI wall	3E+2	1E-7	4E-10	-	-
			(4E+2)	-	-	-	6E-6	6E-5
		Y, see ^{234}Pu	-	3E+2	1E-7	4E-10	-	-
95	Americium-237[2]	W, all compounds	8E+4	3E+5	1E-4	4E-7	1E-3	1E-2
95	Americium-238[2]	W, all compounds	4E+4	3E+3 Bone surf	1E-6	-	5E-4	5E-3
			-	(6E+3)	-	9E-9	-	-
95	Americium-239	W, all compounds	5E+3	1E+4	5E-6	2E-8	7E-5	7E-4
95	Americium-240	W, all compounds	2E+3	3E+3	1E-6	4E-9	3E-5	3E-4
95	Americium-241	W, all compounds	8E-1	6E-3	3E-12	-	-	-
			Bone surf	Bone surf				
			(1E+0)	(1E-2)	-	2E-14	2E-8	2E-7
95	Americium-242m	W, all compounds	8E-1	6E-3	3E-12	-	-	-
			Bone surf	Bone surf				
			(1E+0)	(1E-2)	-	2E-14	2E-8	2E-7
95	Americium-242	W, all compounds	4E+3	8E+1	4E-8	-	5E-5	5E-4
				Bone surf				
			-	(9E+1)	-	1E-10	-	-
95	Americium-243	W, all compounds	8E-1	6E-3	3E-12	-	-	-
			Bone surf	Bone surf				
			(1E+0)	(1E-2)	-	2E-14	2E-8	2E-7

			Table I Occupational Values			Table II Effluent Concentrations		Table III Releases to Sewers
			Col. 1	Col. 2	Col. 3	Col. 1	Col. 2	
			Oral Ingestion	INHALATION				Monthly Average
Atomic Radio-nuclide No.		Class	ALI (µCi)	ALI (µCi)	DAC (µCi/ml)	Air (µCi/ml)	Water (µCi/ml)	Concentration (µCi/ml)
95	Americium-244m[2]	W, all compounds	6E+4	4E+3	2E-6	-	-	-
			St wall	Bone surf				
			(8E+4)	(7E+3)	-	1E-8	1E-3	1E-2
95	Americium-244	W, all compounds	3E+3	2E+2 Bone surf	8E-8	-	4E-5	4E-4
			-	(3E+2)	-	4E-10	-	-
95	Americium-245	W, all compounds	3E+4	8E+4	3E-5	1E-7	4E-4	4E-3
95	Americium-246m[2]	W, all compounds	5E+4 St wall	2E+5	8E-5	3E-7	-	-
			(6E+4)	-	-	-	8E-4	8E-3
95	Americium-246[2]	W, all compounds	3E+4	1E+5	4E-5	1E-7	4E-4	4E-3
96	Curium-238	W, all compounds	2E+4	1E+3	5E-7	2E-9	2E-4	2E-3
96	Curium-240	W, all compounds	6E+1 Bone surf	6E-1 Bone surf	2E-10	-	-	-
			(8E+1)	(6E-1)	-	9E-13	1E-6	1E-5
96	Curium-241	W, all compounds	1E+3	3E+1 Bone surf	1E-8	-	2E-5	2E-4
			-	(4E+1)	-	5E-11	-	-
96	Curium-242	W, all compounds	3E+1 Bone surf	3E-1 Bone surf	1E-10	-	-	-
			(5E+1)	(3E-1)	-	4E-13	7E-7	7E-6
96	Curium-243	W, all compounds	1E+0 Bone surf	9E-3 Bone surf	4E-12	-	-	-
			(2E+0)	(2E-2)	-	2E-14	3E-8	3E-7
96	Curium-244	W, all compounds	1E+0 Bone surf	1E-2 Bone surf	5E-12	-	-	-
			(3E+0)	(2E-2)	-	3E-14	3E-8	3E-7
96	Curium-245	W, all compounds	7E-1 Bone surf	6E-3 Bone surf	3E-12	-	-	-
			(1E+0)	(1E-2)	-	2E-14	2E-8	2E-7
96	Curium-246	W, all compounds	7E-1 Bone surf	6E-3 Bone surf	3E-12	-	-	-
			(1E+0)	(1E-2)	-	2E-14	2E-8	2E-7
96	Curium-247	W, all compounds	8E-1 Bone surf	6E-3 Bone surf	3E-12	-	-	-
			(1E+0)	(1E-2)	-	2E-14	2E-8	2E-7
96	Curium-248	W, all compounds	2E-1 Bone surf	2E-3 Bone surf	7E-13	-	-	-
			(4E-1)	(3E-3)	-	4E-15	5E-9	5E-8

			Table I Occupational Values			Table II Effluent Concentrations		Table III Releases to Sewers
			Col. 1	Col. 2	Col. 3	Col. 1	Col. 2	
			Oral Ingestion	INHALATION				Monthly Average
Atomic Radio-nuclide No.		Class	ALI (µCi)	ALI (µCi)	DAC (µCi/ml)	Air (µCi/ml)	Water (µCi/ml)	Concentration (µCi/ml)
96	Curium-249[2]	W, all compounds	5E+4	2E+4 Bone surf	7E-6	-	7E-4	7E-3
			-	(3E+4)	-	4E-8	-	-
96	Curium-250	W, all compounds	4E-2 Bone surf	3E-4 Bone surf	1E-13	-	-	-
			(6E-2)	(5E-4)	-	8E-16	9E-10	9E-9
97	Berkelium-245	W, all compounds	2E+3	1E+3	5E-7	2E-9	3E-5	3E-4
97	Berkelium-246	W, all compounds	3E+3	3E+3	1E-6	4E-9	4E-5	4E-4
97	Berkelium-247	W, all compounds	5E-1 Bone surf	4E-3 Bone surf	2E-12	-	-	-
			(1E+0)	(9E-3)	-	1E-14	2E-8	2E-7
97	Berkelium-249	W, all compounds	2E+2 Bone surf	2E+0 Bone surf	7E-10	-	-	-
			(5E+2)	(4E+0)	-	5E-12	6E-6	6E-5
97	Berkelium-250	W, all compounds	9E+3	3E+2 Bone surf	1E-7	-	1E-4	1E-3
			-	(7E+2)	-	1E-9	-	-
98	Californium-244[2]	W, all compounds except those given for Y	3E+4 St wall	6E+2	2E-7	8E-10	-	-
			(3E+4)	-	-	-	4E-4	4E-3
		Y, oxides and hydroxides	-	6E+2	2E-7	8E-10	-	-
98	Californium-246	W, see ^{244}Cf	4E+2	9E+0	4E-9	1E-11	5E-6	5E-5
		Y, see ^{244}Cf	-	9E+0	4E-9	1E-11	-	-
98	Californium-248	W, see ^{244}Cf	8E+0 Bone surf	6E-2 Bone surf	3E-11	-	-	-
			(2E+1)	(1E-1)	-	2E-13	2E-7	2E-6
		Y, see ^{244}Cf	-	1E-1	4E-11	1E-13	-	-
98	Californium-249	W, see ^{244}Cf	5E-1 Bone surf	4E-3 Bone surf	2E-12	-	-	-
			(1E+0)	(9E-3)	-	1E-14	2E-8	2E-7
		Y, see ^{244}Cf	-	1E-2 Bone surf	4E-12	-	-	-
			-	(1E-2)	-	2E-14	-	-
98	Californium-250	W, see ^{244}Cf	1E+0 Bone surf	9E-3 Bone surf	4E-12	-	-	-
			(2E+0)	(2E-2)	-	3E-14	3E-8	3E-7
		Y, see ^{244}Cf	-	3E-2	1E-11	4E-14	-	-

			Table I Occupational Values			Table II Effluent Concentrations		Table III Releases to Sewers
			Col. 1	Col. 2	Col. 3	Col. 1	Col. 2	
			Oral Ingestion	INHALATION				Monthly Average
Atomic Radio-nuclide No.		Class	ALI (μCi)	ALI (μCi)	DAC (μCi/ml)	Air (μCi/ml)	Water (μCi/ml)	Concentration (μCi/ml)
98	Californium-251	W, see ^{244}Cf	5E-1 Bone surf	4E-3 Bone surf	2E-12	-	-	-
			(1E+0)	(9E-3)	-	1E-14	2E-8	2E-7
		Y, see ^{244}Cf	-	1E-2 Bone surf	4E-12	-	-	-
			-	(1E-2)	-	2E-14	-	-
98	Californium-252	W, see ^{244}Cf	2E+0 Bone surf	2E-2 Bone surf	8E-12	-	-	-
			(5E+0)	(4E-2)	-	5E-14	7E-8	7E-7
		Y, see ^{244}Cf	-	3E-2	1E-11	5E-14	-	-
98	Californium-253	W, see ^{244}Cf	2E+2 Bone surf	2E+0	8E-10	3E-12	-	-
			(4E+2)	-	-	-	5E-6	5E-5
		Y, see ^{244}Cf	-	2E+0	7E-10	2E-12	-	-
98	Californium-254	W, see ^{244}Cf	2E+0	2E-2	9E-12	3E-14	3E-8	3E-7
		Y, see ^{244}Cf	-	2E-2	7E-12	2E-14	-	-
99	Einsteinium-250	W, all compounds	4E+4 Bone surf	5E+2	2E-7	-	6E-4	6E-3
			(1E+3)	-	2E-9	-	-	-
99	Einsteinium-251	W, all compounds	7E+3	9E+2 Bone surf	4E-7	-	1E-4	1E-3
			-	(1E+3)	-	2E-9	-	-
99	Einsteinium-253	W, all compounds	2E+2	1E+0	6E-10	2E-12	2E-6	2E-5
99	Einsteinium-254m	W, all compounds	3E+2 LLI wall	1E+1	4E-9	1E-11	-	-
			(3E+2)	-	-	-	4E-6	4E-5
99	Einsteinium-254	W, all compounds	8E+0 Bone surf	7E-2 Bone surf	3E-11	-	-	-
			(2E+1)	(1E-1)	-	2E-13	2E-7	2E-6
100	Fermium-252	W, all compounds	5E+2	1E+1	5E-9	2E-11	6E-6	6E-5
100	Fermium-253	W, all compounds	1E+3	1E+1	4E-9	1E-11	1E-5	1E-4
100	Fermium-254	W, all compounds	3E+3	9E+1	4E-8	1E-10	4E-5	4E-4
100	Fermium-255	W, all compounds	5E+2	2E+1	9E-9	3E-11	7E-6	7E-5
100	Fermium-257	W, all compounds	2E+1 Bone surf	2E-1 Bone surf	7E-11	-	-	-
			(4E+1)	(2E-1)	-	3E-13	5E-7	5E-6
101	Mendelevium-257	W, all compounds	7E+3	8E+1 Bone surf	4E-8	-	1E-4	1E-3

		Table I Occupational Values			Table II Effluent Concentrations		Table III Releases to Sewers
		Col. 1	Col. 2	Col. 3	Col. 1	Col. 2	
		Oral Ingestion	INHALATION				Monthly Average
Atomic Radio-nuclide No.	Class	ALI (µCi)	ALI (µCi)	DAC (µCi/ml)	Air (µCi/ml)	Water (µCi/ml)	Concentration (µCi/ml)
		-	(9E+1)	-	1E-10	-	-
101 Mendelevium-258	W, all compounds	3E+1	2E-1	1E-10	-	-	-
		Bone surf	Bone surf				
		(5E+1)	(3E-1)	-	5E-13	6E-7	6E-6
- Any single radionuclide not listed above with decay mode other than alpha emission or spontaneous fission and with radioactive half-life less than 2 hours Submersion[1]		-	2E+2	1E-7	1E-9	-	-
- Any single radionuclide not listed above with decay mode other than alpha emission or spontaneous fission and with radioactive half-life greater than 2 hours		-	2E-1	1E-10	1E-12	1E-8	1E-7
- Any single radionuclide not listed above that decays by alpha emission or spontaneous fission, or any mixture for which either the identity or the concentration of any radio-nuclide in the mixture is not known		-	4E-4	2E-13	1E-15	2E-9	2E-8

FOOTNOTES:
[1]"Submersion" means that values given are for submersion in a hemispherical semi-infinite cloud of airborne material.
[2]These radionuclides have radiological half-lives of less than 2 hours. The total effective dose equivalent received during operations with these radionuclides might include a significant contribution from external exposure. The DAC values for all radionuclides, other than those designated Class "Submersion," are based upon the committed effective dose equivalent due to the intake of the radionuclide into the body and do NOT include potentially significant contributions to dose equivalent from external exposures. The licensee may substitute 1E-7 µCi/ml for the listed DAC to account for the submersion dose prospectively, but should use individual monitoring devices or other radiation measuring instruments that measure external exposure to demonstrate compliance with the limits. (see 40.17)
[3]For soluble mixtures of U-238, U-234, and U-235 in air, chemical toxicity may be the limiting factor (see 40.15(5)). If the percent by weight (enrichment) of U-235 is not greater than 5, the concentration value for a 40-hour workweek is 0.2 milligrams uranium per cubic meter of air average. For any enrichment, the product of the average concentration and time of exposure during a 40-hour workweek shall not exceed 8E-3 (SA) µCi-hr/ml, where SA is the specific activity of the uranium inhaled. The specific activity for natural uranium is 6.77E-7 curies per gram U. The specific activity for other mixtures of U-238, U-235, and U-234, if not known, shall be:

SA = 3.6E-7 curies/gram U U-depleted

SA = [0.4 + 0.38 (enrichment) + 0.0034 (enrichment)^2] E-6, enrichment $\geq$ 0.72

where enrichment is the percentage by weight of U-235, expressed as percent.

NOTE:
1. If the identity of each radionuclide in a mixture is known but the concentration of one or more of the radionuclides in the mixture is not known, the DAC for the mixture shall be the most restrictive DAC of any radionuclide in the mixture.
2. If the identity of each radionuclide in the mixture is not known, but it is known that certain radionuclides specified in this appendix are not present in the mixture, the inhalation ALI, DAC, and effluent and sewage concentrations for the mixture are the lowest values specified in this appendix for any radionuclide that is not known to be absent from the mixture; or

If it is known that Ac-227-D and Cm-250-W are not present	-	7E-4	3E-13	-	-	-
If, in addition, it is known that Ac-227-W,Y, Th-229-W,Y, Th-230-W, Th-232-W,Y, Pa-231-W,Y, Np-237-W, Pu-239-W, Pu-240-W, Pu-242-W, Am-241-W, Am-242m-W, Am-243-W, Cm-245-W, Cm-246-W, Cm-247-W, Cm-248-W, Bk-247-W, Cf-249-W, and Cf-251-W are not present	-	7E-3	3E-12	-	-	-
If, in addition, it is known that Sm-146-W, Sm-147-W, Gd-148-D,W, Gd-152-D,W, Th-228-W,Y, Th-230-Y, U-232-Y, U-233-Y, U-234-Y, U-235-Y, U-236-Y, U-238-Y, Np-236-W, Pu-236-W,Y, Pu-238-W,Y, Pu-239-Y, Pu-240-Y, Pu-242-Y, Pu-244-W,Y, Cm-243-W, Cm-244-W, Cf-248-W, Cf-249-Y, Cf-250-W,Y, Cf-251-Y, Cf-252-W,Y, and Cf-254-W,Y are not present	-	7E-2	3E-11	-	-	-

		Table I Occupational Values			Table II Effluent Concentrations		Table III Releases to Sewers
		Col. 1	Col. 2	Col. 3	Col. 1	Col. 2	
		Oral Ingestion	INHALATION				Monthly Average
Atomic Radio-nuclide No.	Class	ALI (µCi)	ALI (µCi)	DAC (µCi/ml)	Air (µCi/ml)	Water (µCi/ml)	Concentration (µCi/ml)
If, in addition, it is known that Pb-210-D, Bi-210m-W, Po-210-D,W, Ra-223-W, Ra-225-W, Ra-226-W, Ac-225-D,W,Y, Th-227-W,Y, U-230-D,W,Y, U-232-D,W, Pu-241-W, Cm-240-W, Cm-242-W, Cf-248-Y, Es-254-W, Fm-257-W, and Md-258-W are not present		-	7E-1	3E-10	-	-	-
If, in addition, it is known that Si-32-Y, Ti-44-Y, Fe-60-D, Sr-90-Y, Zr-93-D,Cd-113m-D, Cd-113-D, In-115-D,W, La-138-D, Lu-176-W, Hf-178m-D,W, Hf-182-D,W, Bi-210m-D, Ra-224-W, Ra-228-W, Ac-226-D,W,Y, Pa-230-W,Y, U-233-D,W, U-234-D,W, U-235-D, W, U-236-D,W, U-238-D,W, Pu-241-Y, Bk-249-W, Cf-253-W,Y, and Es-253-W are not present		-	7E+0	3E-9	-	-	-
If it is known that Ac-227-D,W,Y, Th-229-W,Y, Th-232-W,Y, Pa-231-W, Y, Cm-248-W, and Cm-250-W are not present		-	-	-	-	1E-14	-
If, in addition, it is known that Sm-146-W, Gd-148-D,W, Gd-152-D, Th-228-W,Y, Th-230-W,Y, U-232-Y, U-233-Y, U-234-Y, U-235-Y, U-236-Y, U-238-Y, U-Nat-Y, Np-236-W, Np-237-W, Pu-236-W,Y, Pu-238-W,Y, Pu-239-W,Y, Pu-240-W,Y, Pu-242-W,Y, Pu-244-W,Y, Am-241-W, Am-242m-W, Am-243-W, Cm-243-W, Cm-244-W, Cm-245-W, Cm-246-W, Cm-247-W, Bk-247-W, Cf-249-W,Y, Cf-250-W,Y, Cf-251-W,Y, Cf-252-W,Y, and Cf-254-W,Y are not present		-	-	-	1E-13	-	-
If, in addition, it is known that Sm-147-W, Gd-152-W, Pb-210-D, Bi-210m-W, Po-210-D,W, Ra-223-W, Ra-225-W, Ra-226-W, Ac-225-D, W,Y, Th-227-W,Y, U-230-D,W,Y, U-232-D,W, U-Nat-W, Pu-241-W, Cm-240-W, Cm-242-W, Cf-248-W,Y, Es-254-W, Fm-257-W, and Md-258-W are not present		-	-	-	-	1E-12	-
If, in addition it is known that Fe-60, Sr-90, Cd-113m, Cd-113, In-115, I-129, Cs-134, Sm-145, Sm-147, Gd-148, Gd-152, Hg-194 (organic), Bi-210m, Ra-223, Ra-224, Ra-225, Ac-225, Th-228, Th-230, U-233, U-234, U-235, U-236, U-238, U-Nat, Cm-242, Cf-248, Es-254, Fm-257, and Md-258 are not present		-	-	-	-	1E-6	1E-5

3. If a mixture of radionuclides consists of uranium and its daughters in ore dust (10 µm AMAD particle distribution assumed) prior to chemical separation of the uranium from the ore, the following values may be used for the DAC of the mixture: 6E-11 µCi of gross alpha activity from uranium-238, uranium-234, thorium-230, and radium-226 per milliliter of air; 3E-11 µCi of natural uranium per milliliter of air; or 45 micrograms of natural uranium per cubic meter of air.

4. If the identity and concentration of each radionuclide in a mixture are known, the limiting values should be derived as follows: determine, for each radionuclide in the mixture, the ratio between the concentration present in the mixture and the concentration otherwise established in Appendix B, Chapter 40 for the specific radionuclide when not in a mixture. The sum of such ratios for all of the radionuclides in the mixture may not exceed "1" (i.e., "unity").

EXAMPLE: If radionuclides "A," "B," and "C" are present in concentrations C_A, C_B, and C_C, and if the applicable DACs are DAC_A, DAC_B, and DAC_C, respectively, then the concentrations shall be limited so that the following relationship exists:

$$\frac{C_A}{DAC_A} + \frac{C_B}{DAC_B} + \frac{C_C}{DAC_C} \leq 1$$

[**ARC 8982B**, IAB 8/11/10, effective 9/15/10]

CHAPTER 40

APPENDIX C

QUANTITIES[1] OF LICENSED OR REGISTERED MATERIAL REQUIRING LABELING

Radionuclide	Quantity (μCi)*	Radionuclide	Quantity (μCi)*
Hydrogen-3	1,000	Chromium-48	1,000
Beryllium-7	1,000	Chromium-49	1,000
Beryllium-10	1	Chromium-51	1,000
Carbon-11	1,000	Manganese-51	1,000
Carbon-14	100	Manganese-52m	1,000
Fluorine-18	1,000	Manganese-52	100
Sodium-22	10	Manganese-53	1,000
Sodium-24	100	Manganese-54	100
Magnesium-28	100	Manganese-56	1,000
Aluminum-26	10	Iron-52	100
Silicon-31	1,000	Iron-55	100
Silicon-32	1	Iron-59	10
Phosphorus-32	10	Iron-60	1
Phosphorus-33	100	Cobalt-55	100
Sulfur-35	100	Cobalt-56	10
Chlorine-36	10	Cobalt-57	100
Chlorine-38	1,000	Cobalt-58m	1,000
Chlorine-39	1,000	Cobalt-58	100
Argon-39	1,000	Cobalt-60m	1,000
Argon-41	1,000	Cobalt-60	1
Potassium-40	100	Cobalt-61	1,000
Potassium-42	1,000	Cobalt-62m	1,000
Potassium-43	1,000	Nickel-56	100
Potassium-44	1,000	Nickel-57	100
Potassium-45	1,000	Nickel-59	100
Calcium-41	100	Nickel-63	100
Calcium-45	100	Nickel-65	1,000
Calcium-47	100	Nickel-66	10
Scandium-43	1,000	Copper-60	1,000
Scandium-44m	100	Copper-61	1,000
Scandium-44	100	Copper-64	1,000
Scandium-46	10	Copper-67	1,000
Scandium-47	100	Zinc-62	100
Scandium-48	100	Zinc-63	1,000
Scandium-49	1,000	Zinc-65	10
Titanium-44	1	Zinc-69m	100

Titanium-45	1,000	Zinc-69	1,000
Vanadium-47	1,000	Zinc-71m	1,000
Vanadium-48	100	Zinc-72	100
Vanadium-49	1,000	Gallium-65	1,000
Gallium-66	100	Krypton-81	1,000
Gallium-67	1,000	Krypton-83m	1,000
Gallium-68	1,000	Krypton-85m	1,000
Gallium-70	1,000	Krypton-85	1,000
Gallium-72	100	Krypton-87	1,000
Gallium-73	1,000	Krypton-88	1,000
Germanium-66	1,000	Rubidium-79	1,000
Germanium-67	1,000	Rubidium-81m	1,000
Germanium-68	10	Rubidium-81	1,000
Germanium-69	1,000	Rubidium-82m	1,000
Germanium-71	1,000	Rubidium-83	100
Germanium-75	1,000	Rubidium-84	100
Germanium-77	1,000	Rubidium-86	100
Germanium-78	1,000	Rubidium-87	100
Arsenic-69	1,000	Rubidium-88	1,000
Arsenic-70	1,000	Rubidium-89	1,000
Arsenic-71	100	Strontium-80	100
Arsenic-72	100	Strontium-81	1,000
Arsenic-73	100	Strontium-83	100
Arsenic-74	100	Strontium-85m	1,000
Arsenic-76	100	Strontium-85	100
Arsenic-77	100	Strontium-87m	1,000
Arsenic-78	1,000	Strontium-89	10
Selenium-70	1,000	Strontium-90	0.1
Selenium-73m	1,000	Strontium-91	100
Selenium-73	100	Strontium-92	100
Selenium-75	100	Yttrium-86m	1,000
Selenium-79	100	Yttrium-86	100
Selenium-81m	1,000	Yttrium-87	100
Selenium-81	1,000	Yttrium-88	10
Selenium-83	1,000	Yttrium-90m	1,000
Bromine-74m	1,000	Yttrium-90	10
Bromine-74	1,000	Yttrium-91m	1,000
Bromine-75	1,000	Yttrium-91	10
Bromine-76	100	Yttrium-92	100
Bromine-77	1,000	Yttrium-93	100
Bromine-80m	1,000	Yttrium-94	1,000
Bromine-80	1,000	Yttrium-95	1,000

Bromine-82	100
Bromine-83	1,000
Bromine-84	1,000
Krypton-74	1,000
Krypton-76	1,000
Krypton-77	1,000
Krypton-79	1,000
Niobium-88	1,000
Niobium-89m (66 min)	1,000
Niobium-89 (122 min)	1,000
Niobium-90	100
Niobium-93m	10
Niobium-94	1
Niobium-95m	100
Niobium-95	100
Niobium-96	100
Niobium-97	1,000
Niobium-98	1,000
Molybdenum-90	100
Molybdenum-93m	100
Molybdenum-93	10
Molybdenum-99	100
Molybdenum-101	1,000
Technetium-93m	1,000
Technetium-93	1,000
Technetium-94m	1,000
Technetium-94	1,000
Technetium-96m	1,000
Technetium-96	100
Technetium-97m	100
Technetium-97	1,000
Technetium-98	10
Technetium-99m	1,000
Technetium-99	100
Technetium-101	1,000
Technetium-104	1,000
Ruthenium-94	1,000
Ruthenium-97	1,000
Ruthenium-103	100
Ruthenium-105	1,000
Zirconium-86	100
Zirconium-88	10
Zirconium-89	100
Zirconium-93	1
Zirconium-95	10
Zirconium-97	100
Palladium-101	1,000
Palladium-103	100
Palladium-107	10
Palladium-109	100
Silver-102	1,000
Silver-103	1,000
Silver-104m	1,000
Silver-104	1,000
Silver-105	100
Silver-106m	100
Silver-106	1,000
Silver-108m	1
Silver-110m	10
Silver-111	100
Silver-112	100
Silver-115	1,000
Cadmium-104	1,000
Cadmium-107	1,000
Cadmium-109	1
Cadmium-113m	0.1
Cadmium-113	100
Cadmium-115m	10
Cadmium-115	100
Cadmium-117m	1,000
Cadmium-117	1,000
Indium-109	1,000
Indium-110m (69.1m)	1,000
Indium-110 (4.9h)	1,000
Indium-111	100
Indium-112	1,000
Indium-113m	1,000
Indium-114m	10
Indium-115m	1,000

Ruthenium-106	1	Indium-115	100
Rhodium-99m	1,000	Indium-116m	1,000
Rhodium-99	100	Indium-117m	1,000
Rhodium-100	100	Indium-117	1,000
Rhodium-101m	1,000	Indium-119m	1,000
Rhodium-101	10	Tin-110	100
Rhodium-102m	10	Tin-111	1,000
Rhodium-102	10	Tin-113	100
Rhodium-103m	1,000	Tin-117m	100
Rhodium-105	100	Tin-119m	100
Rhodium-106m	1,000	Tin-121m	100
Rhodium-107	1,000	Tin-121	1,000
Palladium-100	100		
Tin-123m	1,000	Tellurium-133	1,000
Tin-123	10	Tellurium-134	1,000
Tin-125	10	Iodine-120m	1,000
Tin-126	10	Iodine-120	100
Tin-127	1,000	Iodine-121	1,000
Tin-128	1,000	Iodine-123	100
Antimony-115	1,000	Iodine-124	10
Antimony-116m	1,000	Iodine-125	1
Antimony-116	1,000	Iodine-126	1
Antimony-117	1,000	Iodine-128	1,000
Antimony-118m	1,000	Iodine-129	1
Antimony-119	1,000	Iodine-130	10
Antimony-120		Iodine-131	1
(16m)	1,000	Iodine-132m	100
Antimony-120		Iodine-132	100
(5.76d)	100	Iodine-133	10
Antimony-122	100	Iodine-134	1,000
Antimony-124m	1,000	Iodine-135	100
Antimony-124	10	Xenon-120	1,000
Antimony-125	100	Xenon-121	1,000
Antimony-126m	1,000	Xenon-122	1,000
Antimony-126	100	Xenon-123	1,000
Antimony-127	100	Xenon-125	1,000
Antimony-128		Xenon-127	1,000
(10.4m)	1,000	Xenon-129m	1,000
Antimony-128		Xenon-131m	1,000
(9.01h)	100	Xenon-133m	1,000
Antimony-129	100	Xenon-133	1,000
Antimony-130	1,000	Xenon-135m	1,000

Antimony-131	1,000	Xenon-135	1,000
Tellurium-116	1,000	Xenon-138	1,000
Tellurium-121m	10	Cesium-125	1,000
Tellurium-121	100	Cesium-127	1,000
Tellurium-123m	10	Cesium-129	1,000
Tellurium-123	100	Cesium-130	1,000
Tellurium-125m	10	Cesium-131	1,000
Tellurium-127m	10	Cesium-132	100
Tellurium-127	1,000	Cesium-134m	1,000
Tellurium-129m	10	Cesium-134	10
Tellurium-129	1,000	Cesium-135m	1,000
Tellurium-131m	10	Cesium-135	100
Tellurium-131	100	Cesium-136	10
Tellurium-132	10	Cesium-137	10
Tellurium-133m	100	Cesium-138	1,000
Barium-126	1,000	Promethium-141	1,000
Barium-128	100	Promethium-143	100
Barium-131m	1,000	Promethium-144	10
Barium-131	100	Promethium-145	10
Barium-133m	100	Promethium-146	1
Barium-133	100	Promethium-147	10
Barium-135m	100	Promethium-148m	10
Barium-139	1,000	Promethium-148	10
Barium-140	100	Promethium-149	100
Barium-141	1,000	Promethium-150	1,000
Barium-142	1,000	Promethium-151	100
Lanthanum-131	1,000	Samarium-141m	1,000
Lanthanum-132	100	Samarium-141	1,000
Lanthanum-135	1,000	Samarium-142	1,000
Lanthanum-137	10	Samarium-145	100
Lanthanum-138	100	Samarium-146	1
Lanthanum-140	100	Samarium-147	100
Lanthanum-141	100	Samarium-151	10
Lanthanum-142	1,000	Samarium-153	100
Lanthanum-143	1,000	Samarium-155	1,000
Cerium-134	100	Samarium-156	1,000
Cerium-135	100	Europium-145	100
Cerium-137m	100	Europium-146	100
Cerium-137	1,000	Europium-147	100
Cerium-139	100	Europium-148	10
Cerium-141	100	Europium-149	100

Cerium-143	100
Cerium-144	1
Praseodymium-136	1,000
Praseodymium-137	1,000
Praseodymium-138m	1,000
Praseodymium-139	1,000
Praseodymium-142m	1,000
Praseodymium-142	100
Praseodymium-143	100
Praseodymium-144	1,000
Praseodymium-145	100
Praseodymium-147	1,000
Neodymium-136	1,000
Neodymium-138	100
Neodymium-139m	1,000
Neodymium-139	1,000
Neodymium-141	1,000
Neodymium-147	100
Neodymium-149	1,000
Neodymium-151	1,000
Terbium-147	1,000
Terbium-149	100
Terbium-150	1,000
Terbium-151	100
Terbium-153	1,000
Terbium-154	100
Terbium-155	1,000
Terbium-156m (5.0h)	1,000
Terbium-156m (24.4h)	1,000
Terbium-156	100
Terbium-157	10
Terbium-158	1
Terbium-160	10
Terbium-161	100
Dysprosium-155	1,000
Dysprosium-157	1,000
Dysprosium-159	100
Dysprosium-165	1,000
Dysprosium-166	100
Holmium-155	1,000
Europium-150 (12.62h)	100
Europium-150 (34.2y)	1
Europium-152m	100
Europium-152	1
Europium-154	1
Europium-155	10
Europium-156	100
Europium-157	100
Europium-158	1,000
Gadolinium-145	1,000
Gadolinium-146	10
Gadolinium-147	100
Gadolinium-148	0.001
Gadolinium-149	100
Gadolinium-151	10
Gadolinium-152	100
Gadolinium-153	10
Gadolinium-159	100
Ytterbium-162	1,000
Ytterbium-166	100
Ytterbium-167	1,000
Ytterbium-169	100
Ytterbium-175	100
Ytterbium-177	1,000
Ytterbium-178	1,000
Lutetium-169	100
Lutetium-170	100
Lutetium-171	100
Lutetium-172	100
Lutetium-173	10
Lutetium-174m	10
Lutetium-174	10
Lutetium-176m	1,000
Lutetium-176	100
Lutetium-177m	10
Lutetium-177	100
Lutetium-178m	1,000
Lutetium-178	1,000
Lutetium-179	1,000
Hafnium-170	100

Holmium-157	1,000
Holmium-159	1,000
Holmium-161	1,000
Holmium-162m	1,000
Holmium-162	1,000
Holmium-164m	1,000
Holmium-164	1,000
Holmium-166m	1
Holmium-166	100
Holmium-167	1,000
Erbium-161	1,000
Erbium-165	1,000
Erbium-169	100
Erbium-171	100
Erbium-172	100
Thulium-162	1,000
Thulium-166	100
Thulium-167	100
Thulium-170	10
Thulium-171	10
Thulium-172	100
Thulium-173	100
Thulium-175	1,000
Tantalum-182	10
Tantalum-183	100
Tantalum-184	100
Tantalum-185	1,000
Tantalum-186	1,000
Tungsten-176	1,000
Tungsten-177	1,000
Tungsten-178	1,000
Tungsten-179	1,000
Tungsten-181	1,000
Tungsten-185	100
Tungsten-187	100
Tungsten-188	10
Rhenium-177	1,000
Rhenium-178	1,000
Rhenium-181	1,000
Rhenium-182 (12.7h)	1,000
Hafnium-172	1
Hafnium-173	1,000
Hafnium-175	100
Hafnium-177m	1,000
Hafnium-178m	0.1
Hafnium-179m	10
Hafnium-180m	1,000
Hafnium-181	10
Hafnium-182m	1,000
Hafnium-182	0.1
Hafnium-183	1,000
Hafnium-184	100
Tantalum-172	1,000
Tantalum-173	1,000
Tantalum-174	1,000
Tantalum-175	1,000
Tantalum-176	100
Tantalum-177	1,000
Tantalum-178	1,000
Tantalum-179	100
Tantalum-180m	1,000
Tantalum-180	100
Tantalum-182m	1,000
Iridium-188	100
Iridium-189	100
Iridium-190m	1,000
Iridium-190	100
Iridium-192m (1.4m)	10
Iridium-192 (73.8d)	1
Iridium-194m	10
Iridium-194	100
Iridium-195m	1,000
Iridium-195	1,000
Platinum-186	1,000
Platinum-188	100
Platinum-189	1,000
Platinum-191	100
Platinum-193m	100
Platinum-193	1,000

Rhenium-182 (64.0h)	100
Rhenium-184m	10
Rhenium-184	100
Rhenium-186m	10
Rhenium-186	100
Rhenium-187	1,000
Rhenium-188m	1,000
Rhenium-188	100
Rhenium-189	100
Osmium-180	1,000
Osmium-181	1,000
Osmium-182	100
Osmium-185	100
Osmium-189m	1,000
Osmium-191m	1,000
Osmium-191	100
Osmium-193	100
Osmium-194	1
Iridium-182	1,000
Iridium-184	1,000
Iridium-185	1,000
Iridium-186	100
Iridium-187	1,000
Thallium-194m	1,000
Thallium-194	1,000
Thallium-195	1,000
Thallium-197	1,000
Thallium-198m	1,000
Thallium-198	1,000
Thallium-199	1,000
Thallium-200	1,000
Thallium-201	1,000
Thallium-202	100
Thallium-204	100
Lead-195m	1,000
Lead-198	1,000
Lead-199	1,000
Lead-200	100
Lead-201	1,000
Lead-202m	1,000
Lead-202	10
Platinum-195m	100
Platinum-197m	1,000
Platinum-197	100
Platinum-199	1,000
Platinum-200	100
Gold-193	1,000
Gold-194	100
Gold-195	10
Gold-198m	100
Gold-198	100
Gold-199	100
Gold-200m	100
Gold-200	1,000
Gold-201	1,000
Mercury-193m	100
Mercury-193	1,000
Mercury-194	1
Mercury-195m	100
Mercury-195	1,000
Mercury-197m	100
Mercury-197	1,000
Mercury-199m	1,000
Mercury-203	100
Francium-223	100
Radium-223	0.1
Radium-224	0.1
Radium-225	0.1
Radium-226	0.1
Radium-227	1,000
Radium-228	0.1
Actinium-224	1
Actinium-225	0.01
Actinium-226	0.1
Actinium-227	0.001
Actinium-228	1
Thorium-226	10
Thorium-227	0.01
Thorium-228	0.001
Thorium-229	0.001
Thorium-230	0.001
Thorium-231	100

Lead-203	1,000
Lead-205	100
Lead-209	1,000
Lead-210	0.01
Lead-211	100
Lead-212	1
Lead-214	100
Bismuth-200	1,000
Bismuth-201	1,000
Bismuth-202	1,000
Bismuth-203	100
Bismuth-205	100
Bismuth-206	100
Bismuth-207	10
Bismuth-210m	0.1
Bismuth-210	1
Bismuth-212	10
Bismuth-213	10
Bismuth-214	100
Polonium-203	1,000
Polonium-205	1,000
Polonium-207	1,000
Polonium-210	0.1
Astatine-207	100
Astatine-211	10
Radon-220	1
Radon-222	1
Francium-222	100
Neptunium-236 (22.5h)	1
Neptunium-237	0.001
Neptunium-238	10
Neptunium-239	100
Neptunium-240	1,000
Plutonium-234	10
Plutonium-235	1,000
Plutonium-236	0.001
Plutonium-237	100
Plutonium-238	0.001
Plutonium-239	0.001
Plutonium-240	0.001
Plutonium-241	0.01
Thorium-232	100
Thorium-234	10
Thorium-natural	100
Protactinium-227	10
Protactinium-228	1
Protactinium-230	0.1
Protactinium-231	0.001
Protactinium-232	1
Protactinium-233	100
Protactinium-234	100
Uranium-230	0.01
Uranium-231	100
Uranium-232	0.001
Uranium-233	0.001
Uranium-234	0.001
Uranium-235	0.001
Uranium-236	0.001
Uranium-237	100
Uranium-238	100
Uranium-239	1,000
Uranium-240	100
Uranium-natural	100
Neptunium-232	100
Neptunium-233	1,000
Neptunium-234	100
Neptunium-235	100
Neptunium-236 (1.15E+5)	0.001
Curium-242	0.01
Curium-243	0.001
Curium-244	0.001
Curium-245	0.001
Curium-246	0.001
Curium-247	0.001
Curium-248	0.001
Curium-249	1,000
Berkelium-245	100
Berkelium-246	100
Berkelium-247	0.001
Berkelium-249	0.1
Berkelium-250	10
Californium-244	100

Plutonium-242	0.001	Californium-246	1
Plutonium-243	1,000	Californium-248	0.01
Plutonium-244	0.001	Californium-249	0.001
Plutonium-245	100	Californium-250	0.001
Americium-237	1,000	Californium-251	0.001
Americium-238	100	Californium-252	0.001
Americium-239	1,000	Californium-253	0.1
Americium-240	100	Californium-254	0.001
Americium-241	0.001	Einsteinium-250	100
Americium-242m	0.001	Einsteinium-251	100
Americium-242	10	Einsteinium-253	0.1
Americium-243	0.001	Einsteinium-254m	1
Americium-244m	100	Einsteinium-254	0.01
Americium-244	10	Fermium-252	1
Americium-245	1,000	Fermium-253	1
Americium-246m	1,000	Fermium-254	10
Americium-246	1,000	Fermium-255	1
Curium-238	100	Fermium-257	0.01
Curium-240	0.1	Mendelevium-257	10
Curium-241	1	Mendelevium-258	0.01
Any alpha-emitting radionuclide not listed above or mixtures of alpha emitters of unknown composition	0.001	Any radionuclide other than alpha-emitting radionuclides not listed above, or mixtures of beta emitters of unknown composition	0.01

*To convert μCi to kBq, multiply the μCi value by 37.

[1]The quantities listed above were derived by taking 1/10th of the most restrictive ALI listed in Table I, Columns 1 and 2, of Appendix B to this chapter, rounding to the nearest factor of 10, and constraining the values listed between 37 Bq and 37 MBq (0.001 and 1,000 μCi). Values of 3.7 MBq (100 μCi) have been assigned for radionuclides having a radioactive half-life in excess of E+9 years, except rhenium, 37 MBq (1,000 μCi), to take into account their low specific activity.

NOTE: For purposes of 40.61(5), 40.64(1), and 40.95(1) where there is involved a combination of radionuclides in known amounts, the limit for the combination shall be derived as follows: determine, for each radionuclide in the combination, the ratio between the quantity present in the combination and the limit otherwise established for the specific radionuclide when not in combination. The sum of such ratios for all radionuclides in the combination may not exceed "1"—that is, unity.

CHAPTER 40

APPENDIX D

REQUIREMENTS FOR TRANSFERS AND MANIFESTS OF LOW-LEVEL RADIOACTIVE WASTE INTENDED FOR DISPOSAL AT LICENSED LAND DISPOSAL FACILITIES

As used in this appendix, the following definitions apply:

"Chelating agent" means amine polycarboxylic acids (e.g., EDTA, DTPA), hydroxy-carboxylic acids, and polycarboxylic acids (e.g., citric acid, carbolic acid, and glucinic acid).

"Chemical description" means a description of the principal chemical characteristics of a low-level radioactive waste.

"Computer-readable medium" means that the regulatory agency's computer can transfer the information from the medium into its memory.

"Consignee" means the designated receiver of the shipment of low-level radioactive waste.

"Decontamination facility" means a facility operating under an agreement state or Nuclear Regulatory Commission license whose principal purpose is decontamination of equipment or materials to accomplish recycle, reuse, or other waste management objectives and, for purposes of this appendix, is not considered to be a consignee for LLW shipments.

"Disposal container" means a container principally used to confine low-level radioactive waste during disposal operations at a land disposal facility (also see "high integrity container"). Note that for some shipments, the disposal container may be the transport package.

"EPA identification number" means the number received by a transporter following application to the administrator of EPA as required by 40 CFR Part 263.

"Forms 540, 540A, 541, 541A, 542, and 542A" are official forms referenced in this appendix. Licensees need not use originals of these forms as long as any substitute forms are equivalent to the original documentation in respect to content, clarity, size, and location of information. Upon agreement between the shipper and consignee, Forms 541 (and 541A) and Forms 542 (and 542A) may be completed, transmitted, and stored in electronic media. The electronic media must have the capability for producing legible, accurate, and complete records in the format of the uniform manifest.

"Generator" means a licensee operating under an agreement state or Nuclear Regulatory Commission license who (1) is a waste generator as defined in this rule, or (2) is the licensee to whom waste can be attributed within the context of the Low-Level Radioactive Waste Policy Amendments Act of 1985 (e.g., waste generated as a result of decontamination or recycle activities).

"High integrity container (HIC)" means a container commonly designed to meet the structural stability requirements of 10 CFR 61.56, and to meet United States Department of Transportation requirements for a Type A package.

"Land disposal facility" means the land, buildings and structures, and equipment which are intended to be used for the disposal of radioactive wastes. For purposes of this appendix, a "geologic repository" as defined in 10 CFR Part 60 is not considered a land disposal facility.

"Package" means the assembly of components necessary to ensure compliance with the packaging requirements of United States Department of Transportation regulations, together with its radioactive contents, as presented for transport.

"Physical description" means the items called for on Form 541 to describe a low-level radioactive waste.

"Residual waste" means low-level radioactive waste resulting from processing or decontamination activities that cannot be easily separated into distinct batches attributable to specific waste generators. This waste is attributable to the processor or decontamination facility, as applicable.

"Shipper" means the licensed entity (i.e., the waste generator, waste collector, or waste processor) who offers low-level radioactive waste for transportation, typically consigning this type of waste to a licensed waste collector, waste processor, or land disposal facility operator.

"Shipping paper" means Form 540 and, if required, Form 540A which includes the information required by United States Department of Transportation in 49 CFR Part 172.

"Uniform Low-Level Radioactive Waste Manifest" or "uniform manifest" means the combination of Forms 540, 541 and, if necessary, 542, and their respective continuation sheets as needed, or equivalent.

"Waste collector" means an entity, operating under an agreement state or Nuclear Regulatory Commission license, whose principal purpose is to collect and consolidate waste generated by others, and to transfer this waste, without processing or repackaging the collected waste, to another licensed waste collector, licensed waste processor, or licensed land disposal facility.

"Waste description" means the physical, chemical and radiological description of a low-level radioactive waste as called for on Form 541.

"Waste generator" means an entity, operating under an agreement state or Nuclear Regulatory Commission license, who (1) possesses any material or component that contains radioactivity or is radioactively contaminated for which the licensee foresees no further use, and (2) transfers this material or component to a licensed land disposal facility or to a licensed waste collector or processor for handling or treatment prior to disposal. A licensee performing processing or decontamination services may be a "waste generator" if the transfer of low-level radioactive waste from its facility is defined as "residual waste."

"Waste processor" means an entity, operating under an agreement state or Nuclear Regulatory Commission license, whose principal purpose is to process, repackage, or otherwise treat low-level radioactive material or waste generated by others prior to eventual transfer of waste to a licensed low-level radioactive waste land disposal facility.

"Waste type" means a waste within a disposal container having a unique physical description (i.e., a specific waste descriptor code or description; or a waste sorbed on or solidified in a specifically defined media).

I. Manifest

A waste generator, collector, or processor who transports, or offers for transportation, low-level radioactive waste intended for ultimate disposal at a licensed low-level radioactive waste land disposal facility must prepare a manifest reflecting information requested on applicable Forms 540 (Uniform Low-Level Radioactive Waste Manifest (Shipping Paper)) and 541 (Uniform Low-Level Radioactive Waste Manifest (Container and Waste Description)) and, if necessary, on an applicable Form 542 (Uniform Low-Level Radioactive Waste Manifest (Manifest Index and Regional Compact Tabulation)). Forms 540 and 540A must be completed and must physically accompany the pertinent low-level waste shipment. Upon agreement between shipper and consignee, Forms 541 and 541A and 542 and 542A may be completed, transmitted, and stored in electronic media with the capability for producing legible, accurate, and complete records on the respective forms. Licensees are not required by this agency to comply with the manifesting requirements of this part when they ship:

(a) LLW for processing and expect its return (i.e., for storage under their license) prior to disposal at a licensed land disposal facility;

(b) LLW that is being returned to the licensee who is the "waste generator" or "generator," as defined in this part; or

(c) Radioactively contaminated material to a "waste processor" that becomes the processor's "residual waste."

For guidance in completing these forms, refer to the instructions that accompany the forms. Copies of manifests required by this appendix may be legible carbon copies, photocopies, or computer printouts that reproduce the data in the format of the uniform manifest.

NRC Forms 540, 540A, 541, 541A, 542, and 542A, and the accompanying instructions, in hard copy, may be obtained by writing or calling the Office of Information Services, U.S. Nuclear Regulatory Commission, Washington, DC 20555-0111, telephone (301) 415-5877 or by visiting the NRC's Web site at http://www.nrc.gov and selecting forms from the index found on the home page.

This appendix includes information requirements of the United States Department of Transportation, as codified in 49 CFR Part 172. Information on hazardous, medical, or other waste required to meet Environmental Protection Agency regulations, as codified in 40 CFR Parts 259, 261, or elsewhere, is not addressed in this section, and must be provided on the required EPA forms. However, the required EPA forms must accompany the Uniform Low-Level Radioactive Waste Manifest required by this chapter.

Information Requirements

A. General Information

The shipper of the radioactive waste shall provide the following information on the uniform manifest:

1. The name, facility's address, and telephone number of the licensee shipping the waste;

2. An explicit declaration indicating whether the shipper is acting as a waste generator, collector, processor, or a combination of these identifiers for purposes of the manifested shipment; and

3. The name, address, and telephone number, or the name and EPA identification number, for the carrier transporting the waste.

B. Shipment Information

The shipper of the radioactive waste shall provide the following information regarding the waste shipment on the uniform manifest:

1. The date of the waste shipment;

2. The total number of packages/disposal containers;

3. The total disposal volume and disposal weight in the shipment;

4. The total radionuclide activity in the shipment;

5. The activity of each of the radionuclides, H-3, C-14, Tc-99, and I-129 contained in the shipment; and

6. The total masses of U-233, U-235, and plutonium in special nuclear material, and the total mass of uranium and thorium in source material.

C. Disposal Container and Waste Information

The shipper of the radioactive waste shall provide the following information on the uniform manifest regarding the waste and each disposal container of waste in the shipment:

1. An alphabetic or numeric identification that uniquely identifies each disposal container in the shipment;

2. A physical description of the disposal container, including the manufacturer and model of any high integrity container;

3. The volume displaced by the disposal container;

4. The gross weight of the disposal container, including the waste;

5. For waste consigned to a disposal facility, the maximum radiation level at the surface of each disposal container;

6. A physical and chemical description of the waste;

7. The total weight percentage of chelating agent for any waste containing more than 0.1 percent chelating agent by weight, plus the identity of the principal chelating agent;

8. The approximate volume of waste within a container;

9. The sorbing or solidification media, if any, and the identity of the solidification media vendor and brand name;

10. The identities and activities of individual radionuclides contained in each container, the masses of U-233, U-235, and plutonium in special nuclear material, and the masses of uranium and thorium in source material. For discrete waste types (i.e., activated materials, contaminated equipment, mechanical filters, sealed source/devices, and wastes in solidification/stabilization media), the identities and activities of individual radionuclides associated with or contained in these waste types within a disposal container shall be reported;

11. The total radioactivity within each container; and

12. For wastes consigned to a disposal facility, the classification of the waste pursuant to 10 CFR 61.55. Waste not meeting the structural stability requirements of 10 CFR 61.56(b) must be identified.

D. Uncontainerized Waste Information

The shipper of the radioactive waste shall provide the following information on the uniform manifest regarding a waste shipment delivered without a disposal container:

1. The approximate volume and weight of the waste;

2. A physical and chemical description of the waste;

3. The total weight percentage of chelating agent if the chelating agent exceeds 0.1 percent by weight, plus the identity of the principal chelating agent;

4. For waste consigned to a disposal facility, the classification of the waste pursuant to 10 CFR 61.55. Waste not meeting the structural stability requirements of 10 CFR 61.56(b) must be identified;

5. The identities and activities of individual radionuclides contained in the waste, the masses of U-233, U-235, and plutonium in special nuclear material, and the masses of uranium and thorium in source material; and

6. For wastes consigned to a disposal facility, the maximum radiation levels at the surface of the waste.

E. Multigenerator Disposal Container Information

This section applies to disposal containers enclosing mixtures of waste originating from different generators. (Note: The origin of the LLW resulting from a processor's activities may be attributable to one or more "generators" (including "waste generators") as defined in this appendix.) It also applies to mixtures of wastes shipped in an uncontainerized form, for which portions of the mixture within the shipment originate from different generators.

1. For homogeneous mixtures of waste, such as incinerator ash, provide the waste description applicable to the mixture and the volume of the waste attributed to each generator.

2. For heterogeneous mixtures of waste, such as the combined products from a large compactor, identify each generator contributing waste to the disposal container and, for discrete waste types (i.e., activated materials, contaminated equipment, mechanical filters, sealed source/devices, and wastes in solidification/stabilization media), the identities and activities of individual radionuclides contained in these waste types within the disposal container. For each generator, provide the following:

(a) The volume of waste within the disposal container;

(b) A physical and chemical description of the waste, including the solidification agent, if any;

(c) The total weight percentage of chelating agents for any disposal container containing more than 0.1 percent chelating agent by weight, plus the identity of the principal chelating agent;

(d) The sorbing or solidification media, if any, and the identity of the solidification media vendor and brand name if the media is claimed to meet stability requirements in 10 CFR 61.56(b); and

(e) Radionuclide identities and activities contained in the waste, the masses of U-233, U-235, and plutonium in special nuclear material, and the masses of uranium and thorium in source material if contained in the waste.

II. Certification

An authorized representative of the waste generator, processor, or collector shall certify by signing and dating the shipment manifest that the transported materials are properly classified, described, packaged, marked, and labeled and are in proper condition for transportation according to the applicable regulations of the United States Department of Transportation and this agency. A collector in signing the certification is certifying that nothing has been done to the collected waste that would invalidate the waste generator's certification.

III. Control and Tracking

A. Any licensee who transfers radioactive waste to a land disposal facility or a licensed waste collector shall comply with the requirements in paragraphs A.1. through A.9. of this appendix. Any licensee who transfers waste to a licensed waste processor for waste treatment or repackaging shall comply with the requirements of paragraphs A.4. through A.9. of this appendix. A licensee shall:

1. Prepare all wastes so that the waste is classified according to 10 CFR 61.55 and meets the waste characteristics requirements in 10 CFR 61.56;

2. Label each disposal container (or transport package if potential radiation hazards preclude labeling of the individual disposal container) of waste to identify whether it is Class A waste, Class B waste, Class C waste, or greater than Class C waste, in accordance with 10 CFR 61.55;

3. Conduct a quality assurance program to ensure compliance with 10 CFR 61.55 and 61.56 (the program must include management evaluation of audits);

4. Prepare the Uniform Low-Level Radioactive Waste Manifest as required by this appendix;

5. Forward a copy or electronically transfer the Uniform Low-Level Radioactive Waste Manifest to the intended consignee so that either (1) receipt of the manifest precedes the LLW shipment or (2) the

manifest is delivered to the consignee with the waste at the time the waste is transferred to the consignee. Using both (1) and (2) is also acceptable;

6. Include Form 540 (and Form 540A, if required) with the shipment regardless of the option chosen in paragraph A.5. of this section;

7. Receive acknowledgment of the receipt of the shipment in the form of a signed copy of Form 540;

8. Retain a copy of or electronically store the Uniform Low-Level Radioactive Waste Manifest and documentation of acknowledgment of receipt as the record of transfer of licensed material as required by 641—subrule 39.4(41); and

9. For any shipments or any part of a shipment for which acknowledgment of receipt has not been received within the times set forth in this appendix, conduct an investigation in accordance with paragraph E of this appendix.

B. Any waste collector licensee who handles only prepackaged waste shall:

1. Acknowledge receipt of the waste from the shipper within one week of receipt by returning a signed copy of Form 540;

2. Prepare a new manifest to reflect consolidated shipments that meet the requirements of this appendix. The waste collector shall ensure that, for each container of waste in the shipment, the manifest identifies the generator of that container of waste;

3. Forward a copy or electronically transfer the Uniform Low-Level Radioactive Waste Manifest to the intended consignee so that either: (1) receipt of the manifest precedes the LLW shipment or (2) the manifest is delivered to the consignee with the waste at the time the waste is transferred to the consignee. Using both (1) and (2) is also acceptable;

4. Include Form 540 (and Form 540A, if required) with the shipment regardless of the option chosen in paragraph B.3. of this section;

5. Receive acknowledgment of the receipt of the shipment in the form of a signed copy of Form 540;

6. Retain a copy of or electronically store the Uniform Low-Level Radioactive Waste Manifest and documentation of acknowledgment of receipt as the record of transfer of licensed material as required by 641—subrule 39.4(41);

7. For any shipments or any part of a shipment for which acknowledgment of receipt has not been received within the times set forth in this appendix, conduct an investigation in accordance with paragraph E of this appendix; and

8. Notify the shipper and this agency when any shipment, or part of a shipment, has not arrived within 60 days after receipt of an advance manifest, unless notified by the shipper that the shipment has been canceled.

C. Any licensed waste processor who treats or repackages waste shall:

1. Acknowledge receipt of the waste from the shipper within one week of receipt by returning a signed copy of Form 540;

2. Prepare a new manifest that meets the requirements of this appendix. Preparation of the new manifest reflects that the processor is responsible for meeting these requirements. For each container of waste in the shipment, the manifest shall identify the waste generators, the preprocessed waste volume, and the other information as required in paragraph E.1. of this appendix;

3. Prepare all wastes so that the waste is classified according to 10 CFR 61.55 and meets the waste characteristics requirements in 10 CFR 61.56;

4. Label each package of waste to identify whether it is Class A waste, Class B waste, or Class C waste, in accordance with 10 CFR 61.55 and 61.57;

5. Conduct a quality assurance program to ensure compliance with 10 CFR 61.55 and 61.56 (the program shall include management evaluation of audits);

6. Forward a copy or electronically transfer the Uniform Low-Level Radioactive Waste Manifest to the intended consignee so that either (1) receipt of the manifest precedes the LLW shipment or (2) the manifest is delivered to the consignee with the waste at the time the waste is transferred to the consignee. Using both (1) and (2) is also acceptable;

7. Include Form 540 (and Form 540A, if required) with the shipment regardless of the option chosen in paragraph C.6. of this section;

8. Receive acknowledgment of the receipt of the shipment in the form of a signed copy of Form 540;

9. Retain a copy of or electronically store the Uniform Low-Level Radioactive Waste Manifest and documentation of acknowledgment of receipt as the record of transfer of licensed material as required by 641—subrule 39.4(41);

10. For any shipment or any part of a shipment for which acknowledgment of receipt has not been received within the times set forth in this appendix, conduct an investigation in accordance with paragraph E of this appendix; and

11. Notify the shipper and this agency of any shipment, or part of a shipment, that has not arrived within 60 days after receipt of an advance manifest, unless notified by the shipper that the shipment has been canceled.

D. The land disposal facility operator shall:

1. Acknowledge receipt of the waste within one week of receipt by returning, as a minimum, a signed copy of Form 540 to the shipper. The shipper to be notified is the licensee who last possessed the waste and transferred the waste to the operator. If any discrepancy exists between materials listed on the Uniform Low-Level Radioactive Waste Manifest and materials received, copies or electronic transfer of the affected forms must be returned indicating the discrepancy;

2. Maintain copies of all completed manifests and electronically store the information required by 10 CFR 61.80(l) until the license is terminated; and

3. Notify the shipper and this agency when any shipment, or part of a shipment, has not arrived within 60 days after receipt of an advance manifest, unless notified by the shipper that the shipment has been canceled.

E. Any shipment or part of a shipment for which acknowledgment is not received within the times set forth in this section must:

1. Be investigated by the shipper if the shipper has not received notification or receipt within 20 days after transfer; and

2. Be traced and reported. The investigation shall include tracing the shipment and filing a report with this agency. Each licensee who conducts a trace investigation shall file a written report with this agency within two weeks of completion of the investigation.

CHAPTER 40

APPENDIX E

CLASSIFICATION AND CHARACTERISTICS OF LOW-LEVEL RADIOACTIVE WASTE

I. Classification of Radioactive Waste for Land Disposal

a) Considerations. Determination of the classification of radioactive waste involves two considerations. First, consideration must be given to the concentration of long-lived radionuclides (and their shorter-lived precursors) whose potential hazard will persist long after such precautions as institutional controls, improved waste form, and deeper disposal have ceased to be effective. These precautions delay the time when long-lived radionuclides could cause exposures. In addition, the magnitude of the potential dose is limited by the concentration and availability of the radionuclide at the time of exposure. Second, consideration must be given to the concentration of shorter-lived radionuclides for which requirements on institutional controls, waste form, and disposal methods are effective.

b) Classes of waste.

1) Class A waste is waste that is usually segregated from other waste classes at the disposal site. The physical form and characteristics of Class A waste must meet the minimum requirements set forth in Section II. (a). If Class A waste also meets the stability requirements set forth in Section II. (b), it is not necessary to segregate the waste for disposal.

2) Class B waste is waste that must meet more rigorous requirements on waste form to ensure stability after disposal. The physical form and characteristics of Class B waste must meet both the minimum and stability requirements set forth in Section II.

3) Class C waste is waste that not only must meet more rigorous requirements on waste form to ensure stability but also requires additional measures at the disposal facility to protect against inadvertent intrusion. The physical form and characteristics of Class C waste must meet both the minimum and stability requirements set forth in Section II.

c) Classification determined by long-lived radionuclides. If the radioactive waste contains only radionuclides listed in Table I, classification shall be determined as follows:

1) If the concentration does not exceed 0.1 times the value in Table I, the waste is Class A.

2) If the concentration exceeds 0.1 times the value in Table I, but does not exceed the value in Table I, the waste is Class C.

3) If the concentration exceeds the value in Table I, the waste is not generally acceptable for land disposal.

4) For wastes containing mixtures of radionuclides listed in Table I, the total concentration shall be determined by the sum of fractions rule described in Section I.(g).

TABLE I

Radionuclide	Concentration curie/cubic meter[a]	nanocurie/gram[b]
C-14	8	
C-14 in activated metal	80	
Ni-59 in activated metal	220	
Nb-94 in activated metal	0.2	

Tc-99	3	
I-129	0.08	
Alpha emitting transuranic radionuclides with half-life greater than five years		100
Pu-241		3,500
Cm-242		20,000
Ra-226		100

[a] To convert the Ci/m^3 values to gigabecquerel (GBq) per cubic meter, multiply the Ci/m^3 value by 37.
[b] To convert the nCi/g values to becquerel (Bq) per gram, multiply the nCi/g value by 37.

d) Classification determined by short-lived radionuclides. If the waste does not contain any of the radionuclides listed in Table I, classification shall be determined based on the concentrations shown in Table II. However, as specified in Section I.(f), if radioactive waste does not contain any nuclides listed in either Table I or II, it is Class A.

1) If the concentration does not exceed the value in Column 1, the waste is Class A.

2) If the concentration exceeds the value in Column 1 but does not exceed the value in Column 2, the waste is Class B.

3) If the concentration exceeds the value in Column 2 but does not exceed the value in Column 3, the waste is Class C.

4) If the concentration exceeds the value in Column 3, the waste is not generally acceptable for near-surface disposal.

5) For wastes containing mixtures of the radionuclides listed in Table II, the total concentration shall be determined by the sum of fractions rule described in Section I.(g).

TABLE II

Radionuclide	Concentration, curie/cubic meter *		
	Column 1	Column 2	Column 3
Total of all radionuclides with less than 5-year half-life	700	*	*
H-3	40	*	*
Co-60	700	*	*
Ni-63	3.5	70	700
Ni-63 in activated metal	35	700	7000
Sr-90	0.04	150	7000
Cs-137	1	44	4600

*AGENCY NOTE: To convert the Ci/m^3 value to gigabecquerel (GBq) per cubic meter, multiply the Ci/m^3 value by 37. There are no limits established for these radionuclides in Class B or C wastes. Practical considerations such as the effects of external radiation and internal heat generation on transportation, handling, and disposal will limit the concentrations for these wastes. These wastes shall be Class B unless the concentrations of other radionuclides in Table II determine the waste to be Class C independent of these radionuclides.

e) Classification determined by both long- and short-lived radionuclides. If the radioactive waste contains a mixture of radionuclides, some of which are listed in Table I and some of which are listed in Table II, classification shall be determined as follows:

1) If the concentration of a radionuclide listed in Table I is less than 0.1 times the value listed in Table I, the class shall be that determined by the concentration of radionuclides listed in Table II.

2) If the concentration of a radionuclide listed in Table I exceeds 0.1 times the value listed in Table I, but does not exceed the value in Table I, the waste shall be Class C, provided the concentration of radionuclides listed in Table II does not exceed the value shown in Column 3 of Table II.

f) Classification of wastes with radionuclides other than those listed in Tables I and II. If the waste does not contain any radionuclides listed in either Table I or II, it is Class A.

g) Determination of concentrations in wastes. The concentration of a radionuclide may be determined by indirect methods such as use of scaling factors which relate the inferred concentration of one radionuclide to another that is measured, or radionuclide material accountability, if there is reasonable assurance that the indirect methods can be correlated with actual measurements. The concentration of a radionuclide may be averaged over the volume of the waste, or weight of the waste if the units are expressed as becquerel (nanocurie) per gram.

h) The sum of the fractions rule for mixtures of radionuclides. For determining classification for waste that contains a mixture of radionuclides, it is necessary to determine the sum of fractions by dividing each radionuclide's concentration by the appropriate limit and adding the resulting values. The appropriate limits must all be taken from the same column of the same table. The sum of the fractions for the column must be less than 1.0 if the waste class is to be determined by that column. Example: A waste contains Sr-90 in a concentration of 1.85 TBq/m^3 (50 Ci/m^3) and Cs-137 in a concentration of 814 GBq/m^3 (22 Ci/m^3). Since the concentrations both exceed the values in Column 1, Table II, they must be compared to Column 2 values. For Sr-90 fraction, 50/150 = 0.33; for Cs-137 fraction, 22/44 = 0.5; the sum of the fractions = 0.83. Since the sum is less than 1.0, the waste is Class B.

II. Radioactive Waste Characteristics

a) The following are minimum requirements for all classes of waste and are intended to facilitate handling and provide protection of health and safety of personnel at the disposal site.

1) Wastes shall be packaged in conformance with the conditions of the license issued to the site operator to which the waste will be shipped. Where the conditions of the site license are more restrictive than the provisions of this chapter, the site license conditions shall govern.

2) Wastes shall not be packaged for disposal in cardboard or fiberboard boxes.

3) Liquid waste shall be packaged in sufficient absorbent material to absorb twice the volume of the liquid.

4) Solid waste containing liquid shall contain as little freestanding and noncorrosive liquid as is reasonably achievable, but in no case shall the liquid exceed 1% of the volume.

5) Waste shall not be readily capable of detonation or of explosive decomposition or reaction at normal pressures and temperatures, or of explosive reaction with water.

6) Waste shall not contain, or be capable of generating, quantities of toxic gases, vapors, or fumes harmful to persons transporting, handling, or disposing of the waste. This does not apply to radioactive gaseous waste packaged in accordance with Section II.(a)(8).

7) Waste must not be pyrophoric. Pyrophoric materials contained in wastes shall be treated, prepared, and packaged to be nonflammable.[4]

8) Wastes in a gaseous form shall be packaged at an absolute pressure that does not exceed 1.5 atmospheres at 20°C. Total activity shall not exceed 100 Ci (3.7 TBq) per container.

[4]See 641—38.2 of these rules for the definition of pyrophoric.

9) Wastes containing hazardous, biological, pathogenic, or infectious material shall be treated to reduce to the maximum extent practicable the potential hazard from the nonradiological materials.

b) The following requirements are intended to provide stability of the waste. Stability is intended to ensure that the waste does not degrade and affect overall stability of the site through slumping, collapse, or other failure of the disposal unit and thereby lead to water infiltration. Stability is also a factor in limiting exposure to an inadvertent intruder, since it provides a recognizable and nondispersible waste.

1) Waste shall have structural stability. A structurally stable waste form will generally maintain its physical dimensions and its form, under the expected disposal conditions such as weight of overburden and compaction equipment, the presence of moisture, and microbial activity, and internal factors such as radiation effects and chemical changes. Structural stability can be provided by the waste form itself,

processing the waste to a stable form, or placing the waste in a disposal container or structure that provides stability after disposal.

2) Notwithstanding the provisions in Section II.(a)(3) and (4), liquid wastes, or wastes containing liquid, shall be converted into a form that contains as little freestanding and noncorrosive liquid as is reasonably achievable, but in no case shall the liquid exceed 1% of the volume of the waste when the waste is in a disposal container designed to ensure stability, or 0.5% of the volume of the waste for waste processed to a stable form.

3) Void spaces within the waste and between the waste and its package shall be reduced to the extent practicable.

III. Labeling

Each package of waste shall be clearly labeled to identify whether it is Class A, Class B, or Class C waste, in accordance with Section I.

CHAPTER 40

APPENDIX F

QUANTITIES FOR USE WITH DECOMMISSIONING

Material	Microcurie*
Americium-241	0.01
Antimony-122	100
Antimony-124	10
Antimony-125	10
Arsenic-73	100
Arsenic-74	10
Arsenic-76	10
Arsenic-77	100
Barium-131	10
Barium-133	10
Barium-140	10
Bismuth-210	1
Bromine-82	10
Cadmium-109	10
Cadmium-115m	10
Cadmium-115	100
Calcium-45	10
Calcium-47	10
Carbon-14	100
Cerium-141	100
Cerium-143	100
Cerium-144	1
Cesium-131	1,000
Cesium-134m	100
Cesium-134	1
Cesium-135	10
Cesium-136	10
Cesium-137	10
Chlorine-36	10
Chlorine-38	10
Chromium-51	1,000
Cobalt-58m	10
Cobalt-58	10
Cobalt-60	1
Copper-64	100
Dysprosium-165	10
Dysprosium-166	100

Material	Microcurie*
Erbium-169	100
Erbium-171	100
Europium-152 (9.2 h)	100
Europium-152 (13 yr)	1
Europium-154	1
Europium-155	10
Florine-18	1,000
Gadolinium-153	10
Gadolinium-159	100
Gallium-72	10
Germanium-71	100
Gold-198	100
Gold-199	100
Hafnium-181	10
Holmium-166	100
Hydrogen-3	1,000
Indium-113m	100
Indium-114m	10
Indium-115m	100
Indium-115	10
Iodine-125	1
Iodine-126	1
Iodine-129	0.1
Iodine-131	1
Iodine-132	10
Iodine-133	1
Iodine-134	10
Iodine-135	10
Iridium-192	10
Iridium-194	100
Iron-55	100
Iron-59	10
Krypton-85	100
Krypton-87	10
Lanthanum-140	10
Lutetium-177	100
Manganese-52	10
Manganese-54	10
Manganese-56	10
Mercury-197m	100
Mercury-197	100

Material	Microcurie*
Mercury-203	10
Molybdenum-99	100
Neodymium-147	100
Neodymium-149	100
Nickel-59	100
Nickel-63	10
Nickel-65	100
Niobium-93m	10
Niobium-95	10
Niobium-97	10
Osmium-185	10
Osmium-191m	100
Osmium-191	100
Osmium-193	100
Palladium-103	100
Palladium-109	100
Phosphorus-32	10
Platinum-191	100
Platinum-193m	100
Platinum-193	100
Platinum-197m	100
Platinum-197	100
Plutonium-239	0.01
Polonium-210	0.1
Potassium-42	10
Praseodymium-142	100
Praseodymium-143	100
Promethium-147	10
Promethium-149	10
Radium-226	0.01
Rhenium-186	100
Rhenium-188	100
Rhodium-103m	100
Rhodium-105	100
Rubidium-86	10
Rubidium-87	10
Ruthenium-97	100
Ruthenium-103	10
Ruthenium-105	10
Ruthenium-106	1
Samarium-151	10

Material	Microcurie*
Samarium-153	100
Scandium-46	10
Scandium-47	100
Scandium-48	10
Selenium-75	10
Silicon-31	100
Silver-105	10
Silver-110m	1
Silver-111	100
Sodium-22	1
Sodium-24	10
Strontium-85	10
Strontium-89	1
Strontium-90	0.1
Strontium-91	10
Strontium-92	10
Sulfur-35	100
Tantalum-182	10
Technetium-96	10
Technetium-97m	100
Technetium-97	100
Technetium-99m	100
Technetium-99	10
Tellurium-125m	10
Tellurium-127m	10
Tellurium-127	100
Tellurium-129m	10
Tellurium-129	100
Tellurium-131m	10
Tellurium-132	10
Terbium-160	10
Thallium-200	100
Thallium-201	100
Thallium-202	100
Thallium-204	10
Thorium (natural)**	100
Thulium-170	10
Thulium-171	10
Tin-113	10
Tin-125	10
Tungsten-181	10

Material	Microcurie*
Tungsten-185	10
Tungsten-187	100
Uranium (natural)**	100
Uranium-233	0.01
Uranium-234	0.01
Uranium-235	0.01
Vanadium-48	10
Xenon-131m	1,000
Xenon-133	100
Xenon-135	100
Ytterbium-175	100
Yttrium-90	10
Yttrium-91	10
Yttrium-92	100
Yttrium-93	100
Zinc-65	10
Zinc-69m	100
Zinc-69	1,000
Zirconium-93	10
Zirconium-95	10
Zirconium-97	10
Any alpha-emitting radionuclide not listed above or mixtures of alpha emitters of unknown composition	0.01
Any radionuclide other than alpha-emitting radionuclides, not listed above or mixtures of beta emitters of unknown composition	0.1

*To convert μCi to kBq, multiply the μCi value by 37.
**Based on alpha disintegration rate of U-238, U-234, and U-235.

NOTE: This Appendix is retained for use by those agreement states that need to adopt decommissioning regulations compatible with the U.S. Nuclear Regulatory Commission.

NOTE: Where there is involved a combination of isotopes in known amounts, the limit for the combination should be derived as follows: Determine, for each isotope in the combination, the ratio between the quantity present in the combination and the limit otherwise established for the specific isotope when not in combination. The sum of such ratios for all the isotopes in the combination may not exceed "1"—that is, unity.

CHAPTER 40

APPENDIX G

RADIONUCLIDES OF CONCERN
Rescinded **ARC 1479C**, IAB 6/11/14, effective 7/16/14

APPENDIX H

NATIONALLY TRACKED SOURCE THRESHOLDS

The Terabecquerel (TBq) values are the regulatory standard. The curie (Ci) values specified are obtained by converting from the TBq value. The curie values are provided for practical usefulness only and are rounded after conversion.

Radioactive Material	Category 1 (TBq)	Category 1 (Ci)	Category 2 (TBq)	Category 2 (Ci)
Actinium-227	20	540	0.2	5.4
Americium-241	60	1,600	0.6	16.0
Americium-241/Be	60	1,600	0.6	16.0
Californium-252	20	540	0.2	5.4
Cobalt-60	30	810	0.3	8.1
Curium-244	50	1,400	0.5	14.0
Cesium-137	100	2,700	1.0	27.0
Gadolinium-153	1,000	27,000	10.0	270.0
Iridium-192	80	2,200	0.8	22.0
Plutonium-238	60	1,600	0.6	16.0
Plutonium-239/Be	60	1,600	0.6	16.0
Polonium-210	60	1,600	0.6	16.0
Promethium-147	40,000	1,100,000	400.0	11,000.0
Radium-226	40	1,100	0.4	11.0
Selenium-75	200	5,400	2.0	54.0
Strontium-90	1,000	27,000	10.0	270.0
Thorium-228	20	540	0.2	5.4
Thorium-229	20	540	0.2	5.4
Thulium-170	20,000	540,000	200.0	5,400.0
Ytterbium-169	300	8,100	3.0	81.0

These rules are intended to implement Iowa Code chapter 136C.

[Filed 4/7/80, Notice 2/6/80—published 4/30/80, effective 7/1/80]
[Filed 5/17/85, Notice 2/27/85—published 6/5/85, effective, see rule 40.24]
[Filed 11/24/86, Notice 10/8/86—published 12/17/86, effective 1/21/87]
[Filed 11/6/87, Notice 9/23/87—published 12/2/87, effective 1/6/88]
[Filed 5/10/91, Notice 4/3/91—published 5/29/91, effective 8/28/91]
[Filed 7/16/92, Notice 5/27/92—published 8/5/92, effective 9/9/92]
[Filed 11/5/92, Notice 9/30/92—published 11/25/92, effective 1/13/93]
[Filed 9/17/93, Notice 8/4/93—published 10/13/93, effective 1/1/94]
[Filed 7/14/94, Notice 6/8/94—published 8/3/94, effective 9/7/94]
[Filed 5/15/95, Notice 3/29/95—published 6/7/95, effective 7/12/95]
[Filed 9/16/96, Notice 7/17/96—published 10/9/96, effective 11/16/96]

[Filed 5/16/97, Notice 4/9/97—published 6/4/97, effective 7/9/97]
[Filed 3/18/98, Notice 1/14/98—published 4/8/98, effective 7/1/98]
[Filed 4/2/99, Notice 1/13/99—published 4/21/99, effective 7/1/99]
[Filed 3/15/00, Notice 1/26/00—published 4/5/00, effective 5/10/00]
[Filed 3/16/01, Notice 2/7/01—published 4/4/01, effective 5/9/01]
[Filed 3/14/02, Notice 2/6/02—published 4/3/02, effective 5/8/02]
[Filed 11/15/02, Notice 10/2/02—published 12/11/02, effective 1/15/03]
[Filed 3/14/03, Notice 2/5/03—published 4/2/03, effective 5/7/03]
[Filed 3/12/04, Notice 2/4/04—published 3/31/04, effective 5/5/04]
[Filed 3/11/05, Notice 2/2/05—published 3/30/05, effective 5/4/05]
[Filed 3/9/06, Notice 2/1/06—published 3/29/06, effective 5/3/06]
[Filed 3/16/07, Notice 1/31/07—published 4/11/07, effective 5/16/07]
[Filed 5/14/08, Notice 4/9/08—published 6/4/08, effective 7/9/08]
[Filed ARC 8982B (Notice ARC 8762B, IAB 5/19/10), IAB 8/11/10, effective 9/15/10]
[Filed ARC 1479C (Notice ARC 1414C, IAB 4/2/14), IAB 6/11/14, effective 7/16/14]
[Filed ARC 1639C (Notice ARC 1470C, IAB 5/28/14), IAB 10/1/14, effective 11/5/14]

CHAPTER 41
SAFETY REQUIREMENTS FOR THE USE OF RADIATION MACHINES AND CERTAIN USES OF RADIOACTIVE MATERIALS

641—41.1(136C) X-rays in the healing arts.

41.1(1) *Scope.* This rule establishes requirements, for which a registrant is responsible, for use of X-ray equipment and imaging systems by or under the supervision of an individual authorized by and licensed in accordance with state statutes to engage in the healing arts or veterinary medicine.

a. The provisions of Chapter 41 are in addition to, and not in substitution for, any other applicable portions of 641—Chapters 38 to 42.

b. All references to any Code of Federal Regulations (CFR) in this chapter are those in effect as of November 5, 2014.

41.1(2) *Definitions.* For the purpose of this chapter, the definitions of 641—Chapters 38 and 40 may also apply. The following are specific to 641—Chapter 41.

"Accessible surface" means the external surface of the enclosure or housing of the radiation producing machine as provided by the manufacturer.

"Added filtration" means any filtration which is in addition to the inherent filtration.

"Aluminum equivalent" means the thickness of type 1100 aluminum alloy affording the same attenuation, under specified conditions, as the material in question.

"Attenuation block" means a block or stack, having dimensions 20 centimeters by 20 centimeters by 3.8 centimeters, of type 1100 aluminum alloy or other materials having equivalent attenuation.

"Automatic exposure control (AEC)" means a device which automatically controls one or more technique factors in order to obtain at a preselected location(s) a required quantity of radiation (see also "Phototimer"). (Includes devices such as phototimers and ion chambers.)

"Base density" means the optical density due to the supporting base of the film alone. The base density of a film is the optical density that would result if an unexposed film were processed through the fixer, wash, and dryer, without first passing through the developer.

"Base plus fog density" means the optical density of a film due to its base density plus any action of the developer on the unexposed silver halide crystals. The base plus fog density can be measured by processing an unexposed film through the entire processing cycle and measuring the resultant optical density.

"Beam monitoring system" means a system designed to detect and measure the radiation present in the useful beam.

"C-arm X-ray system" means an X-ray system in which the image receptor and X-ray tube housing assembly are connected by a common mechanical support system in order to maintain a desired spatial relationship. This system is designed to allow a change in the projection of the beam through the patient without a change in the position of the patient.

"Cassette" means a light-tight case, usually made of thin, low X-ray absorption plastic, for holding X-ray film. One or two intensifying screens for the conversion of X-rays to visible light photons are mounted inside the cassette so that they are in close contact to the film.

"Cephalometric device" means a device intended for the radiographic visualization and measurement of the dimensions of the human head.

"Certified components" means components of X-ray systems which are subject to regulations promulgated under Public Law 90-602, the "Radiation Control for Health and Safety Act of 1968," the Food and Drug Administration.

"Certified system" means any X-ray system which has one or more certified component(s).

"Coefficient of variation" or *"C"* means the ratio of the standard deviation to the mean value of a population of observations. It is estimated using the following equation:

$$c = \frac{s}{\overline{x}} = \frac{1}{\overline{x}} \left[\sum_{i=1}^{n} \frac{(x_i - \overline{x})^2}{n-1} \right]^{1/2}$$

where:
s = Estimated standard deviation of the population.
$\overline{X}$ = Mean value of observations in sample.
X_i = i^{th} observation in sample.
n = Number of observations in sample.

"Computed tomography" means the production of a tomogram by the acquisition and computer processing of X-ray transmission data.

"Control chart" means a chart used to record (and control) the results of quality control testing as a function of time.

"Control limit" means the range of variation on a control chart beyond which action must be taken to correct the results of quality control testing.

"Control panel" (see X-ray control panel).

"Cooling curve" means the graphical relationship between heat units stored and cooling time.

"CT" (see "Computed tomography").

"Dead-man switch" means a switch so constructed that a circuit closing contact can be maintained only by continuous pressure on the switch by the operator.

"Dedicated mammography equipment" means X-ray systems designed specifically for breast imaging, providing optimum imaging geometry, a device for breast compression and low dose exposure that can generate reproducible images of high quality.

"Densitometer" means an instrument which measures the degree of blackening (or radiographic density) of film due to radiation or light by measuring the ratio of the light intensity incident on the film to the light intensity transmitted by the film.

"Detents" means mechanical settings that limit or prevent the motion or rotation of an X-ray tube, cassette assembly, or image receptor system.

"Developer" means a chemical solution (alkaline) that changes the latent image (exposed silver halide crystals) on a film to a visible image composed of minute masses of black metallic silver.

"Developer replenishment" means the process, occurring as film travels past a certain point in the processor, triggering the activation of a pump, whereby fresh developer is added in small amounts to the solution in the developer tank of the processor. The purpose is to maintain the proper alkalinity, chemical activity, and level of solution in the developer tank.

"Diagnostic mammography" means mammography performed on an individual who, by virtue of symptoms or physical findings, is considered to have a substantial likelihood of having breast disease.

"Diagnostic source assembly" means the tube housing assembly with a beam-limiting device attached.

"Direct scattered radiation" means that scattered radiation which has been deviated in direction only by materials irradiated by the useful beam (see "Scattered radiation").

"Entrance exposure rate" means the exposure free in air per unit time at the point where the center of the useful beam enters the patient.

"Equipment" (see "X-ray equipment").

"Field emission equipment" means equipment which uses an X-ray tube in which electron emission from the cathode is due solely to the action of an electric field.

"Filter" means material placed in the useful beam to preferentially absorb selected radiations.

"Fixer" means a chemical solution (acidic) which removes the unexposed and undeveloped silver halide crystals from film so it will not discolor or darken with age or exposure to light. Fixer also hardens the gelatin containing the black metallic silver so film may be dried and resist damage from abrasions.

"Fixer retention" means the inadequate removal of fixer from the film by the water in the wash tank of the processor. Retained fixer causes eventual brown discoloration of the radiograph.

"Fluoroscopic imaging assembly" means a subsystem in which X-ray photons produce a visual image. It includes the image receptor(s) such as the image intensifier and spot-film device, electrical

interlocks, if any, and structural material providing linkage between the image receptor and diagnostic source assembly.

"Focal spot (actual)" means the area projected on the anode of the X-ray tube bombarded by the electrons accelerated from the cathode and from which the useful beam originates.

"Focal spot size" means the area of the target or anode that is bombarded by electrons from the cathode of the X-ray tube to produce X-rays. The smaller the focal spot, the better the limited spatial resolution of the X-ray system, especially in magnification mammography.

"Fog" means the density added to a radiograph due to unwanted action of the developer on the unexposed silver halide crystals or by light, radiation, chemical, or heat exposure during storage, handling, and processing.

"General purpose radiographic X-ray system" means any radiographic X-ray system which, by design, is not limited to radiographic examination of specific anatomical regions.

"Gonad shield" means a protective barrier for the testes or ovaries.

"Healing arts screening" means the use of radiation on human beings for the detection or evaluation of health indicators for which the individual is considered at high risk when such tests are not specifically and individually ordered by:

1. An individual authorized under 41.1(3)*"a"*(7), or
2. An individual licensed as a physician in Iowa and listed as an authorized user on an NRC or agreement state radioactive materials license.

"Heat unit" means a unit of energy equal to the product of the peak kilovoltage, milliamperes, and seconds, i.e., kVp × mA × second.

"Image contrast" means the amount of radiographic density difference between adjacent areas resulting from a fixed amount of attentuation difference or light exposure difference.

"Image intensifier" means a device, installed in its housing, which instantaneously converts an X-ray pattern into a corresponding light image of higher energy intensity.

"Image noise" See "Radiographic noise."

"Image quality" means the overall clarity and detail of a radiographic image. Limiting spatial resolution (or resolving power), image sharpness, and image contrast are three common measures of image quality.

"Image receptor" means any device, such as a fluorescent screen or radiographic film, which transforms incident X-ray photons either into a visible image or into another form which can be made into a visible image by further transformations.

"Image sharpness" means the overall impression of detail and clarity in a radiographic image.

"Inherent filtration" means the filtration of the useful beam provided by the permanently installed components of the tube housing assembly.

"Kilovolts peak" (see "Peak tube potential").

"kVp" (see "Peak tube potential").

"kWs" means kilowatt second.

"Leakage technique factors" means the technique factors associated with the diagnostic or therapeutic source assembly which are used in measuring leakage radiation. They are defined as follows:

a. For diagnostic source assemblies intended for capacitor energy storage equipment, the maximum-rated peak tube potential and the maximum-rated number of exposures in an hour for operation at the maximum-rated peak tube potential with the quantity of charge per exposure being 10 millicoulombs, i.e., 10 milliampere seconds, or the minimum obtainable from the unit, whichever is larger.

b. For diagnostic source assemblies intended for field emission equipment rated for pulsed operation, the maximum-rated peak tube potential and the maximum-rated number of X-ray pulses in an hour for operation at the maximum-rated peak tube potential.

c. For all other diagnostic or therapeutic source assemblies, the maximum-rated peak tube potential and the maximum-rated continuous tube current for the maximum-rated peak tube potential.

"Linear attenuation coefficient" or "μ" means the quotient of dN/N divided by dl when dN/N is the fraction of uncharged ionizing radiation that experience interactions in traversing a distance dl in a specified material.

"Line-voltage regulation" means the difference between the no-load and the load line potentials expressed as a percent of the load line potential. It is calculated using the following equation:

Percent line-voltage regulation = $100\ (V_n - V_l)/V_l$

where

V_n = No-load line potential and

V_l = Load line potential.

"mAs" means milliampere second.

"Maximum line current" means the root-mean-square current in the supply line of an X-ray machine operating at its maximum rating.

"Mobile X-ray equipment" (see "X-ray equipment").

"PBL" (see "Positive beam limitation").

"Phototimer" means a method for controlling radiation exposures to image receptors by the amount of radiation which reaches a radiation-monitoring device(s). The radiation-monitoring device(s) is part of an electronic circuit which controls the duration of time the tube is activated (see "Automatic exposure control").

"PID" (see "Position indicating device").

"Portable X-ray equipment" (see "X-ray equipment").

"Position indicating device" means a device on dental X-ray equipment used to indicate the beam position and to establish a definite source-surface (skin) distance. It may or may not incorporate or serve as a beam-limiting device.

"Positive beam limitation" means the automatic or semiautomatic adjustment of an X-ray beam to the size of the selected image receptor, whereby exposures cannot be made without such adjustment.

"Processor" means an automated device which transports film in a controlled manner by a system of rollers through specialized sections where developing, fixing, washing, and drying of the film occur.

"Protective apron" means an apron made of radiation-absorbing materials used to reduce radiation exposure.

"Protective glove" means a glove made of radiation-absorbing materials used to reduce radiation exposure.

"Quality assurance" means the overall program of testing and maintaining the highest possible standards of quality in the acquisition and interpretation of radiographic images.

"Quality control" means the actual process of testing and maintaining the highest possible standards of quality in equipment performance and the acquisition and interpretation of radiographic images.

"Radiation therapy simulation system" means a radiographic or fluoroscopic X-ray system intended for localizing the volume to be exposed during radiation therapy and confirming the position and size of the therapeutic irradiation field.

"Radiograph" means an image receptor on which the image is created directly or indirectly by an X-ray pattern and results in a permanent record.

"Radiographic contrast" means the magnitude of optical density difference between structures of interest and their surroundings, or between areas of film receiving different amount of X-ray or visible light exposure.

"Radiographic noise" means unwanted fluctuations in optical density on the screen-film image.

"Rating" means the operating limits as specified by the component manufacturer.

"Recording" means producing a permanent form of an image resulting from X-ray photons.

"Repeat (or reject) analysis" means a systematic approach to determine the causes for radiographs being discarded or repeated, or both.

"Replenishment rate" means the amount of chemicals added in order to maintain the proper chemical activity of developer and fixer solutions.

"Response time" means the time required for an instrument system to reach 90 percent of its final reading when the radiation-sensitive volume of the instrument system is exposed to a step change in radiation flux from zero sufficient to provide a steady state midscale reading.

"Safelight" means a source of minimal visible light in a darkroom, produced at frequencies (colors) to which the film is insensitive, protecting the film from unwanted exposure (fog) while allowing personnel to function more efficiently and safely.

"Screen" means microscopic phosphor crystals on a plastic support used in conjunction with either single or double emulsion film; the screen emits visible light when exposed to X-radiation, creating a latent image on X-ray film.

"Screen-film combination" means a particular intensifying screen used with a particular type of film. Care must be taken to match the number of screens (one or two) to the number of emulsions coating the film and to match the light output spectrum of the screen to the light sensitivity of the film.

"Screen-film contact" means the close proximity of the intensifying screen to the emulsion of the film, necessary in order to achieve a sharp image on the film.

"Sensitometer" means a device used to reproducibly expose a piece of film to a number of different levels of light intensity.

"Sensitometric strip" means a sheet of film exposed by a sensitometer, resulting in a gray scale range. Such strips are used to measure the range of densities, from minimum to maximum, resulting from a reproducible set of exposures.

"Sensitometry" means a quantitative measurement of the response of film to exposure and development. Sensitometry is used to test the processor setup and stability.

"SID" (see "Source-image receptor distance").

"Source" means the focal spot of the X-ray tube.

"Source-image receptor distance" means the distance from the source to the center of the input surface of the image receptor.

"Spot check" means a procedure which is performed to ensure that a previous calibration continues to be valid.

"Spot film" means a radiograph which is made during a fluoroscopic examination to permanently record conditions which exist during that fluoroscopic procedure.

"Spot-film device" means a device intended to transport or position a radiographic image receptor between the X-ray source and fluoroscopic image receptor. It includes a device intended to hold a cassette over the input end of an image intensifier for the purpose of making a radiograph.

"Stationary X-ray equipment" (see "X-ray equipment").

"Technique factors" means the following conditions of operation:

a. For capacitor energy storage equipment, peak tube potential in kV and quantity of charge in mAs;

b. For field emission equipment rated for pulsed operation, peak tube potential in kV, and number of X-ray pulses;

c. For CT X-ray systems designed for pulsed operation, peak tube potential in kV, scan time in seconds, and either tube current in mA, X-ray pulse width in seconds, and the number of X-ray pulses per scan, or the product of tube current, X-ray pulse width, and the number of X-ray pulses in mAs;

d. For CT X-ray systems not designed for pulsed operation, peak tube potential in kV, and either tube current in mA and scan time in seconds, or the product of tube current and exposure time in mAs and the scan time when the scan time and exposure time are equivalent; and

e. For all other equipment, peak tube potential in kV, and either tube current in mA and exposure time in seconds, or the product of tube current and exposure time in mAs.

"Tomogram" means the depiction of the X-ray attenuation properties of a section through the body.

"Tube rating chart" means the set of curves which specify the rated limits of operation of the tube in terms of the technique factors.

"Useful beam" means the radiation emanating from the tube housing port or the radiation head and passing through the aperture of the beam-limiting device when the exposure controls are in a mode to cause the system to produce radiation.

"Variable-aperture beam-limiting device" means a beam-limiting device which has capacity for stepless adjustment of the X-ray field size at a given SID.

"Viewbox" means a device by which a uniform field of white light is transmitted through an X-ray so that the image on the film may be seen.

"Visible area" means that portion of the input surface of the image receptor over which incident X-ray photons are producing a visible image.

"X-ray control panel" means a device which controls input power to the X-ray high-voltage generator and the X-ray tube. It includes equipment such as timers, phototimers, automatic brightness stabilizers, and similar devices, which control the technique factors of an X-ray exposure.

"X-ray equipment" means an X-ray system, subsystem, or component thereof. Types of X-ray equipment are as follows:

a. "Mobile X-ray equipment" means X-ray equipment mounted on a permanent base with wheels or casters for moving while completely assembled.

b. "Portable X-ray equipment" means X-ray equipment designed to be hand-carried.

c. "Stationary X-ray equipment" means X-ray equipment which is installed in a fixed location.

"X-ray exposure control" means a device, switch, button or similar means by which an operator initiates or terminates the radiation exposure. The X-ray exposure control may include such associated equipment as timers and backup timers.

"X-ray field" means that area of the intersection of the useful beam and any one of the set of planes parallel to and including the plane of the image receptor, whose perimeter is the locus of points at which the exposure rate is one-fourth of the maximum in the intersection.

"X-ray high-voltage generator" means a device which transforms electrical energy from the potential supplied by the X-ray control to the tube operating potential. The device may also include means for transforming alternating current to direct current, filament transformers for the X-ray tube(s), high-voltage switches, electrical protective devices, and other appropriate elements.

"X-ray system" means an assemblage of components for the controlled production of X-rays. It includes minimally an X-ray high-voltage generator, an X-ray control, a tube housing assembly, a beam-limiting device, and the necessary supporting structures. Additional components which function with the system are considered integral parts of the system.

"X-ray table" means a patient support device with its patient support structure (tabletop) interposed between the patient and the image receptor during radiography or fluoroscopy. This includes, but is not limited to, any stretcher equipped with a radiolucent panel and any table equipped with a cassette tray (or bucky), cassette tunnel, image intensifier, or spot-film device beneath the tabletop.

41.1(3) *Administrative controls.*

a. Registrant. The registrant shall be responsible for maintaining and directing the operation of the X-ray system(s) under the registrant's administrative control, for ensuring that the requirements of these rules are met in the operation of the X-ray system(s), and for having the following minimum tests performed by a registered service facility according to the following schedule:

1. Medical/chiropractic: timer accuracy, exposure reproducibility, kVp accuracy as set forth in 41.1(6), and light field/X-ray field alignment as set forth in 41.1(6) every two years.

2. Dental/podiatry: timer accuracy, exposure reproducibility and kVp accuracy as set forth in 41.1(7) every four years.

3. Fluoroscopic: entrance exposure rate (41.1(5)*"c"*), and minimum SSD (41.1(5)*"f"*) annually.

4. Veterinary systems are exempt from the above testing requirements.

All service and installation shall be performed by persons registered under 641—subrule 39.3(3). The registrant or the registrant's agent shall ensure that the requirements of these rules are met in the operation of the X-ray system(s).

(1) An X-ray system which does not meet the provisions of these rules shall not be operated for diagnostic or therapeutic purposes unless so directed by the agency. All position locking, holding, and centering devices on X-ray system components and systems shall function as intended. All X-ray systems shall be maintained in good mechanical repair and comply with all state and local electrical code requirements.

(2) Individuals who will be operating the X-ray systems shall be adequately instructed in safe operating procedures and be competent in the safe use of the equipment. In addition:

1. Operators in medical facilities shall meet the requirements of 641—Chapter 42, as applicable, and shall make the permit available at the individual's place of employment. If the permit holder works at more than one facility, a duplicate of the permit shall be kept at each facility.

(3) A chart shall be provided in the vicinity of the diagnostic X-ray system's control panel which specifies, for all examinations performed with that system, the following information:

1. Patient's body part and anatomical size, or body part thickness, or age (for pediatrics), versus technique factors to be utilized unless automatically set by the X-ray system;

2. Type and size of the film or film-screen combination to be used;

3. Type and focal distance of the grid to be used, if any;

4. Source to image receptor distance to be used, except for dental intra-oral radiography; and

5. Type and location of placement of human patient shielding to be used (e.g., gonad).

(4) Written safety procedures shall be provided to each individual operating X-ray equipment, including patient holding and any restrictions of the operating technique required for the safe operation of the particular X-ray system. The operator shall be able to demonstrate familiarity with these procedures.

(5) Except for patients who cannot be moved out of the room, only the staff and ancillary personnel required for the medical procedure or training shall be in the room during the radiographic exposure. Other than the patient being examined:

1. All individuals shall be positioned such that no part of the body will be struck by the useful beam unless protected by 0.5 millimeter lead equivalent.

2. The X-ray operator, other staff, ancillary personnel, and other persons required for the medical procedure shall be protected from the scattered primary radiation by protective aprons or whole body protective barriers of not less than 0.25 millimeter lead equivalent.

3. Human patients who cannot be removed from the room shall be protected from the direct scatter radiation by whole body protective barriers of 0.25 millimeter lead equivalent or shall be so positioned that the nearest portion of the body is at least 2 meters from both the tube head and the nearest edge of the image receptor.

(6) Gonad shielding of not less than 0.50 millimeter lead equivalent shall be used for human patients, who have not passed the reproductive age, during radiographic procedures in which the gonads are in the useful beam, except for cases in which this would interfere with the diagnostic procedure.

(7) Individuals shall not be exposed to the useful beam unless (1) the radiation exposure occurs in the context of a previously established professional relationship between a licensed practitioner of the healing arts or a licensed registered nurse who is registered as an advanced registered nurse practitioner pursuant to Iowa Code chapter 152 and a patient, which includes a physical examination by the practitioner of the patient unless such examination is not clinically indicated; and (2) such practitioner issues a written order for the radiation exposure. The written order shall be issued prior to the exposure unless the exposure results from care provided in an emergency or surgery setting. A verbal order may be issued provided the licensed practitioner is supervising the procedure and the order is documented in the patient's record after the procedure is completed. This provision specifically prohibits deliberate exposure for the following purposes:

1. Exposure of an individual for training, demonstration, or other non-healing arts purposes; and

2. Exposure of an individual for the purpose of healing arts screening except as authorized by 41.1(3)*"a"*(11).

(8) When a patient or film must be provided with auxiliary support during a radiation exposure:

1. Mechanical holding devices shall be used when the technique permits. The written safety procedures, required by 41.1(3)*"a"*(4), shall list individual projections where holding devices cannot be utilized;

2. Written safety procedures, as required by 41.1(3)*"a"*(4), shall indicate the requirements for selecting a holder and the procedure the holder shall follow;

3. The human holder shall be instructed in personal radiation safety and protected as required by 41.1(3)*"a"*(5)"2";

4. No individual shall be used routinely to hold film or patients; and

5. In those cases where the human patient must hold the film, except during intraoral examinations, any portion of the body other than the area of clinical interest struck by the useful beam shall be protected by not less than 0.5 millimeter lead equivalent material.

6. Each facility shall have leaded aprons and gloves available in sufficient numbers to provide protection to all personnel who are involved with X-ray operations and who are otherwise not shielded.

(9) Procedures and auxiliary equipment designed to minimize patient and personnel exposure commensurate with the needed diagnostic information shall be utilized.

1. The speed of film or screen and film combinations shall be the fastest speed consistent with the diagnostic objective of the examinations. Film cassettes without intensifying screens shall not be used for any routine diagnostic radiological imaging, with the exception of veterinary radiography and standard film packets for intra-oral use in dental radiography.

2. The radiation exposure to the patient shall be the minimum exposure required to produce images of good diagnostic quality.

3. Portable or mobile X-ray equipment shall be used only for examinations where it is impractical to transfer the patient(s) to a stationary X-ray installation.

4. X-ray systems subject to 41.1(6) shall not be utilized in procedures where the source to human patient distance is less than 30 centimeters.

5. If grids are used between the patient and the image receptor to decrease scatter to the film and improve contrast, the grid shall:

- Be positioned properly, i.e., tube side facing the correct direction, and the grid centered to the central ray;
- If the grid is of the focused type, be at the proper focal distance for the SIDs being used.

(10) All individuals who are associated with the operation of an X-ray system are subject to the requirements of 641—subrule 40.36(4) and rules 641—40.15(136C) and 641—40.37(136C). In addition:

1. When protective clothing or devices are worn on portions of the body and a personnel monitoring device(s) is present, it (they) shall be worn in accordance with the recommendations found in Chapter 4 of the National Council of Radiation Protection and Measurements Report No. 57.

2. Exposure of a personnel monitoring device to deceptively indicate a dose delivered to an individual is prohibited.

(11) Healing arts screening. Any person proposing to conduct a healing arts screening program shall not initiate such a program in the state of Iowa without prior written approval of the agency. When requesting such approval, that person shall submit the information outlined in Appendix C of this chapter. The agency shall not approve a healing arts screening program unless the applicant submits data supporting the efficacy of the screening test in diagnosing the disease or condition being screened. If any information submitted to the agency becomes invalid or outdated, the applicant shall notify the agency in writing within five calendar days.

(12) Rescinded IAB 3/31/04, effective 5/5/04.

b. Information and maintenance record and associated information. Records in 41.1(3)*"b"*(1) and (3) below shall be maintained until the X-ray system is removed from the facility. There shall be two cycles of records on file for items in 41.1(3)*"b"*(2) below. The registrant shall maintain the following information for each X-ray system for inspection by the agency:

(1) User's manual for the X-ray system;

(2) Records of surveys, calibrations, maintenance, and modifications performed on the X-ray system(s) with the names of persons who performed such services;

(3) A copy of all correspondence with this agency regarding that X-ray system.

c. X-ray utilization log. Except for veterinary facilities, each facility shall maintain an X-ray log containing the patient's name, the type of examinations, the dates the examinations were performed, the name of the individual performing the X-ray procedure, and the number of exposures and retakes involved. When the patient or film must be provided with human auxiliary support, the name of the human holder shall be recorded. These records shall be kept until the facility is inspected by this agency or until all films listed on the utilization log have been purged.

d. Plan review.

(1) Prior to construction of all new installations, or modifications of existing installations, or installation of equipment into existing facilities utilizing X-rays for diagnostic or therapeutic purposes, the floor plans and equipment arrangements shall be submitted to the agency for review and verification that national standards have been met. The required information is denoted in Appendices A and B of this chapter.

(2) The agency may require the applicant to utilize the services of a qualified expert to determine the shielding requirements prior to the plan review and approval.

(3) The approval of such plans shall not preclude the requirement of additional modifications should a subsequent analysis of operating conditions indicate the possibility of an individual receiving a dose in excess of the limits prescribed in 641—Chapter 40.

e. Federal performance standards. All X-ray equipment shall comply with the applicable performance standards of 21 CFR 1020.30 to 1020.40 which were in effect at the time the unit was manufactured. All equipment manufactured before the effective date of 21 CFR 1020.30 to 1020.40 shall meet the requirements of the Iowa rules. Persons registered to possess the affected radiation-emitting equipment in Iowa shall be responsible for maintaining the equipment in compliance with the appropriate federal performance standards.

f. X-ray film processing facilities and practices (except for mammography). Each installation using a radiographic X-ray system and using analog image receptors (e.g., radiographic film) shall have available suitable equipment for handling and processing radiographic film in accordance with the following provisions:

(1) Manually developed film.

1. Processing tanks shall be constructed of mechanically rigid, corrosion-resistant material; and

2. Film shall be processed in accordance with the time-temperature relationships recommended by the film developer manufacturer. The specified developer temperature and immersion time shall be posted in the darkroom. Deviations from the manufacturer's recommendations shall be in writing and on file at the facility. Documentation shall include justification for the deviation.

3. Devices shall be utilized which will indicate the actual temperature of the developer and signal the passage of a preset time appropriate to the developing time required.

(2) Automatic processors and other closed processing systems.

1. Film shall be processed in accordance with the time-temperature relationships recommended by the film developer manufacturer.

2. Processing deviations from the requirements of 41.1(3)*"f"* shall be documented by the registrant in such manner that the requirements are shown to be met or exceeded (e.g., extended processing and special rapid chemistry).

3. All processing equipment shall be in good mechanical working order.

(3) Other requirements.

1. Pass boxes, if provided, shall be so constructed as to exclude light from the darkroom when cassettes are placed in or removed from the boxes, and shall incorporate adequate shielding from stray radiation to prevent exposure of undeveloped film.

2. The darkroom shall be light tight and use proper safelighting such that any film type in use exposed in a cassette to X-radiation sufficient to produce an optical density from 1 to 2 when processed shall not suffer an increase in density greater than 0.1 when exposed out of the cassette in the darkroom for 2 minutes with all safelights on. If used, daylight film handling boxes shall preclude fogging of the film.

3. Darkrooms typically used by more than one individual shall be provided a method to prevent accidental entry while undeveloped films are being handled or processed.

4. Film shall be stored in a cool, dry place and shall be protected from exposure to stray radiation. Film in open packages shall be stored in a light tight container.

5. Film cassettes and intensifying screens shall be inspected periodically and shall be cleaned and replaced as necessary to best ensure radiographs of good diagnostic quality.

6. Outdated X-ray film shall not be used for diagnostic radiographs, unless the film has been stored in accordance with the manufacturer's recommendations and a sample of the film passes a sensitometric test for normal ranges of base plus fog and speed.

7. Film developing solutions shall be prepared in accordance with the directions given by the manufacturer and shall be maintained in strength by replenishment or renewal so that full development is accomplished within the time specified by the manufacturer.

(4) Records shall be maintained to verify that the items in 41.1(3)*"f"* are performed according to the requirements. Records may be discarded only after an agency inspection has been completed and the facility determined to be in compliance.

g. Retention of films. Record retention of films shall be seven years for patients 18 years of age or older and seven years plus the difference between the patient's age and 18 for minors.

(1) If the facility is currently utilizing hard-copy film to store images, it may continue to use this method throughout the retention period.

(2) If the facility is currently utilizing computer media and also storing images in a hard-copy format, it may continue to use this method of retention throughout the retention period. If the images are also on computer media, the data should be backed up, or refreshed, at appropriate intervals as defined by the facility.

(3) If the facility is solely utilizing computer media to store study information for which a report is generated, the recording media is to be stored in conditions that will ensure that deterioration will not occur for the period required by this policy. The facility must maintain either retrieval or access or both to the stored images.

(4) If a patient's medical images are identified as being involved in a legal case, the records should immediately be coded appropriately, and maintained for the required time frame defined in this paragraph. At the time the records have reached the end of the appropriate time frame for retention, the previously identified responsible individuals involved in the legal action should be contacted for further instruction.

(5) If records are temporarily transferred to any party, appropriate information relating to location, date of release, and individual having custody of the records should be maintained.

(6) A facility that is ceasing operations must either transfer its film records to another facility or provide the film records to its patients. A certified letter as to the location, or disposition, of the film records must be sent to notify the patients of the transferal.

41.1(4) *General requirements for all diagnostic X-ray systems.* In addition to other requirements of this chapter, all diagnostic X-ray systems shall meet the following requirements:

a. Warning label. The control panel containing the main power switch shall bear the warning statement, legible and accessible to view: "WARNING: This X-ray unit may be dangerous to patient and operator unless safe exposure factors and operating instructions are observed."

b. Battery charge indicator. On battery-powered X-ray generators, visual means shall be provided on the control panel to indicate whether the battery is in a state of charge adequate for proper operation.

c. Leakage radiation from the diagnostic source assembly. The leakage radiation from the diagnostic source assembly measured at a distance of 1 meter in any direction from the source shall not exceed 100 milliroentgens (25.8 μC/kg) in one hour when the X-ray tube is operated at its leakage technique factors. Compliance shall be determined by measurements averaged over an area of 100 square centimeters with no linear dimension greater than 20 centimeters.

d. Radiation from components other than the diagnostic source assembly. The radiation emitted by a component other than the diagnostic source assembly shall not exceed 2 milliroentgens (0.516 μC/kg) in one hour at 5 centimeters from any accessible surface of the component when it is operated in an assembled X-ray system under any conditions for which it was designed. Compliance shall be determined by measurements averaged over an area of 100 square centimeters with no linear dimension greater than 20 centimeters.

e. Beam quality.

(1) Half-value layer.

1. The half-value layer of the useful beam for a given X-ray tube potential shall not be less than the values shown in Table I. If it is necessary to determine such half-value layer at an X-ray tube potential which is not listed in Table I, linear interpolation or extrapolation may be made.

Table I

Design operating range (kVp)	Measured potential (kVp)	Half-value layer (mm of aluminum)
Below 50	30	0.3
	40	0.4
	49	0.5
50 to 70	50	1.2
	60	1.3
	70	1.5
Above 70	71	2.1
	80	2.3
	90	2.5
	100	2.7
	110	3.0
	120	3.2
	130	3.5
	140	3.8
	150	4.1

2. and 3. Rescinded IAB 4/8/98, effective 7/1/98.

4. For capacitor energy storage equipment, compliance with the requirements of 41.1(4)*"e"* shall be determined with the system fully charged and a setting of 10 mAs for each exposure.

5. The required minimal half-value layer of the useful beam shall include the filtration contributed by all materials which are permanently between the source and the patient.

(2) Filtration controls. For X-ray systems which have variable kVp and variable filtration for the useful beam, a device shall link the kVp selector with the filter(s) and shall prevent an exposure unless the minimum amount of filtration required by 41.1(4)*"e"*(1)"1" is in the useful beam for the given kVp which has been selected.

f. Multiple tubes. Where two or more radiographic tubes are controlled by one exposure switch, the tube or tubes which have been selected shall be clearly indicated prior to initiation of the exposure. This indication shall be both on the X-ray control panel and at or near the tube housing assembly which has been selected.

g. Mechanical support of tube head. The tube housing assembly supports shall be adjusted such that the tube housing assembly will remain stable during an exposure unless tube housing movement is a designed function of the X-ray system.

h. Technique indicators.

(1) The technique factors to be used during an exposure shall be indicated before the exposure begins. If automatic exposure controls are used, the technique factors which are set prior to the exposure shall be indicated.

(2) The requirement of 41.1(4)*"h"*(1) may be met by permanent markings on equipment having fixed technique factors. Indication of technique factors shall be visible from the operator's position except in the case of spot films made by the fluoroscopist.

(3) The technique indicators shall be accurate to within manufacturer's standards.

i. Rescinded IAB 3/30/05, effective 5/4/05.

41.1(5) *Fluoroscopic X-ray systems except for computed tomography X-ray systems.* All fluoroscopic X-ray systems shall be image intensified and meet the following requirements:

a. Limitation of useful beam.

(1) Primary barrier.

1. The fluoroscopic imaging assembly shall be provided with a primary protective barrier which intercepts the entire cross section of the useful beam at any SID.

2. The X-ray tube used for fluoroscopy shall not produce X-rays unless the barrier is in position to intercept the entire useful beam.

(2) Fluoroscopic beam limitation.

1. For certified fluoroscopic systems with or without a spot film device, neither the length nor the width of the X-ray field in the plane of the image receptor shall exceed that of the visible area of the image receptor by more than 3 percent of the SID. The sum of the excess length and the excess width shall be no greater than 4 percent of the SID.

2. For uncertified fluoroscopic systems with a spot film device, the X-ray beam with the shutter fully opened (during fluoroscopy or spot filming) shall be no larger than the largest spot film size for which the device is designed. Measurements shall be made at the maximum SID available but at no less than 20 centimeters from the tabletop to the film plane distance.

3. For uncertified fluoroscopic systems without a spot film device, the requirements of 41.1(5)*"a"*(2)"1" apply.

4. Other requirements for fluoroscopic beam limitation:

- Means shall be provided to permit further limitation of the field. Beam-limiting devices manufactured after May 22, 1979, and incorporated in equipment with a variable SID or a visible area of greater than 300 square centimeters shall be provided with means for stepless adjustment of the X-ray field;
- All equipment with a fixed SID and a visible area of 300 square centimeters or less shall be provided either with stepless adjustment of the X-ray field or with means to further limit the X-ray field size at the plane of the image receptor to 125 square centimeters or less;
- If provided, stepless adjustment shall, at the greatest SID, provide continuous field sizes from the maximum attainable to a field size of 5 centimeters by 5 centimeters or less;
- For equipment manufactured after February 25, 1978, when the angle between the image receptor and beam axis is variable, means shall be provided to indicate when the axis of the X-ray beam is perpendicular to the plane of the image receptor;
- For noncircular X-ray fields used with circular image receptors, the error in alignment shall be determined along the length and width dimensions of the X-ray field which pass through the center of the visible area of the image receptor.

(3) Spot-film beam limitation. Spot-film devices shall meet the following requirements:

1. Means shall be provided between the source and the patient for adjustment of the X-ray field size in the plane of the film to the size of that portion of the film which has been selected on the spot-film selector. Such adjustment shall be automatically accomplished except when the X-ray field size in the plane of the film is smaller than that of the selected portion of the film. For spot-film devices manufactured after June 21, 1979, if the X-ray field size is less than the size of the selected portion of the film, the means for adjustment of the field size shall be only at the operator's option;

2. Neither the length nor the width of the X-ray field in the plane of the image receptor shall differ from the corresponding dimensions of the selected portion of the image receptor by more than 3 percent of the SID when adjusted for full coverage of the selected portion of the image receptor. The sum, without regard to sign, of the length and width differences shall not exceed 4 percent of the SID;

3. It shall be possible to adjust the X-ray field size in the plane of the film to a size smaller than the selected portion of the film. The minimum field size at the greatest SID shall be equal to, or less than, 5 centimeters by 5 centimeters;

4. The center of the X-ray field in the plane of the film shall be aligned with the center of the selected portion of the film to within 2 percent of the SID; and

5. On spot-film devices manufactured after February 25, 1978, if the angle between the plane of the image receptor and beam axis is variable, means shall be provided to indicate when the axis of the X-ray beam is perpendicular to the plane of the image receptor, and compliance shall be determined with the beam axis indicated to be perpendicular to the plane of the image receptor.

(4) Override. If a means exists to override any of the automatic X-ray field size adjustments required in 41.1(5)*"a"*(2) and 41.1(5)*"a"*(3), that means:

1. Shall be designed for use only in the event of system failure;

2. Shall incorporate a signal visible at the fluoroscopist's position which will indicate whenever the automatic field size adjustment is overridden; and

3. Shall have a clear and durable label as follows:

FOR X-RAY FIELD
LIMITATION SYSTEM FAILURE

b. Activation of the fluoroscopic tube. X-ray production in the fluoroscopic mode shall be controlled by a device which requires continuous pressure by the fluoroscopist for the entire time of any exposure. When recording serial fluoroscopic images, the fluoroscopist shall be able to terminate the X-ray exposure(s) at any time, but means may be provided to permit completion of any single exposure of the series in process.

c. Exposure rate limits.

(1) Entrance exposure rate allowable limits.

1. Fluoroscopic equipment which is provided with automatic exposure rate control shall not be operable at any combination of tube potential and current which will result in an exposure rate in excess of 2.6 mC/kg (10 roentgens) per minute at the point where the center of the useful beam enters the patient, except

- During recording of fluoroscopic images; or
- When an optional high level control is provided. When so provided, the equipment shall not be operable at any combination of tube potential and current which will result in an exposure rate in excess of 5 roentgens (1.3 mC/kg) per minute at the point where the center of the useful beam enters the patient unless the high level control is activated. Special means of activation of high level controls shall be required. The high level control shall only be operable when continuous manual activation is provided by the operator. A continuous signal audible to the fluoroscopist shall indicate that the high level control is being employed.

2. Fluoroscopic equipment which is not provided with automatic exposure rate control shall not be operable at any combination of tube potential and current which will result in an exposure rate in excess of 5 roentgens (1.3 mC/kg) per minute at the point where the center of the useful beam enters the patient, except:

- During recording of fluoroscopic images; or
- When the mode or modes have an optional high level control, in which case the mode or modes shall not be operable at any combination of tube potential and current which shall result in an exposure rate in excess of 5 roentgens (1.3 mC/kg) per minute at the point where the center of the useful beam enters the patient, unless the high level control is activated. Special means of activation of high level controls shall be required. The high level control shall only be operable when continuous manual activation is provided by the operator. A continuous signal audible to the fluoroscopist shall indicate that the high level control is being employed.

3. Compliance with the requirements of 41.1(5)*"c"* shall be determined as follows:

- If the source is below the table, exposure rate shall be measured 1 centimeter above the tabletop or cradle;
- If the source is above the table, the exposure rate shall be measured at 30 centimeters above the tabletop with the end of the beam-limiting device or spacer positioned as closely as possible to the point of measurement;

- All C-arm fluoroscopes, both stationary and mobile, shall meet the entrance exposure rate limits at 30 centimeters from the input surface of the fluoroscopic imaging assembly with the source positioned at any available SID provided that the end of the spacer assembly or beam-limiting device is not closer than 30 centimeters from the input surface of the fluoroscopic imaging assembly.
- For a lateral type fluoroscope, the exposure rate shall be measured at a point 15 centimeters from the centerline of the X-ray table and in the direction of the X-ray source with the end of the beam-limiting device or spacer positioned as closely as possible to the point of measurement. If the tabletop is movable, it shall be positioned as closely as possible to the lateral X-ray source, with the end of the beam-limiting device or spacer no closer than 15 centimeters to the centerline of the X-ray table.

4. Fluoroscopic equipment which is provided with both automatic exposure rate control mode and a manual mode shall not be operable at any combination of tube potential and current which shall result in an exposure rate in excess of 10 roentgens (2.6 mC/kg) per minute in either mode at the point where the center of the useful beam enters the patient, except:

- During recording of fluoroscopic images; or
- When the mode or modes have an optional high level control, in which case the mode or modes shall not be operable at any combination of tube potential and current which shall result in an exposure rate in excess of 5 roentgens (1.3 mC/kg) per minute at the point where the center of the useful beam enters the patient, unless the high level control is activated. Special means of activitation of high level controls shall be required. The high level control shall only be operable when continuous manual activitation is provided by the operator. A continuous signal audible to the fluroscopist shall indicate that the high level control is being employed.

5. Any fluoroscopic equipment manufactured after May 19, 1995, which can exceed 5 roentgens (1.3 mC/kg) per minute shall be equipped with an automatic exposure rate control. All entrance exposure rate limits shall be 10 roentgens (2.6 mC/kg) per minute with an upper limit of 20 roentgens (5.2 mC/kg) per minute when the high level control is activated.

6. Conditions of periodic measurement of maximum entrance exposure rate are as follows:

- The measurement shall be made under the conditions that satisfy the requirements of 41.1(5)*"c"*(1)"3";
- The kVp, mA, or other selectable parameters shall be adjusted to those settings which give the maximum entrance exposure rate;
- The X-ray system(s) that incorporates automatic exposure rate control shall have sufficient attenuative material placed in the useful beam to produce either a milliamperage or kilovoltage or both to satisfy the conditions of 41.1(5)*"c"*(1)"3."

(2) Reserved.

d. Barrier transmitted radiation rate limits.

(1) The exposure rate due to transmission through the primary protective barrier with the attenuation block in the useful beam, combined with radiation from the image intensifier, if provided, shall not exceed 2 milliroentgens (0.516 μC/kg) per hour at 10 centimeters from any accessible surface of the fluoroscopic imaging assembly beyond the plane of the image receptor for each roentgen per minute of entrance exposure rate.

(2) Measuring compliance of barrier transmission.

1. The exposure rate due to transmission through the primary protective barrier combined with radiation from the image intensifier shall be determined by measurements averaged over an area of 100 square centimeters with no linear dimension greater than 20 centimeters.

2. If the source is below the tabletop, the measurement shall be made with the input surface of the fluoroscopic imaging assembly positioned 30 centimeters above the tabletop.

3. If the source is above the tabletop and the SID is variable, the measurement shall be made with the end of the beam-limiting device or spacer as close to the tabletop as it can be placed, provided that it shall not be closer than 30 centimeters.

4. Movable grids and compression devices shall be removed from the useful beam during the measurement.

e. Indication of potential and current. During fluoroscopy and cinefluorography the kV and the mA shall be continuously indicated.

f. Source-to-skin distance. The SSD shall not be less than:

(1) 38 centimeters on stationary fluoroscopes installed on or after August 1, 1974,

(2) 35.5 centimeters on stationary fluoroscopes which were in operation prior to August 1, 1974,

(3) 30 centimeters on all mobile fluoroscopes, and

(4) 20 centimeters for mobile fluoroscopes used for specific surgical application.

(5) The written safety procedures must provide precautionary measures to be adhered to during the use of this device in addition to the procedures provided in 41.1(3)*"a"*(4).

g. Fluoroscopic timer.

(1) Means shall be provided to preset the cumulative on-time of the fluoroscopic X-ray tube. The maximum cumulative time of the timing device shall not exceed five minutes without resetting.

(2) A signal audible to the fluoroscopist shall indicate the completion of any preset cumulative on-time. Such signal shall continue to sound while X-rays are produced until the timing device is reset.

h. Control of scattered radiation.

(1) Fluoroscopic table designs when combined with procedures utilized shall be such that no unprotected part of any staff or ancillary individual's body shall be exposed to unattenuated scattered radiation which originates from under the table. The attenuation required shall be not less than 0.25 millimeter lead equivalent.

(2) Equipment configuration when combined with procedures shall be such that no portion of any staff or ancillary individual's body, except the extremities, shall be exposed to the unattenuated scattered radiation emanating from above the tabletop unless that individual:

1. Is at least 120 centimeters from the center of the useful beam, or

2. The radiation has passed through not less than 0.25 millimeter lead equivalent material including, but not limited to, drapes, Bucky-slot cover panel, or self-supporting curtains, in addition to any lead equivalency provided by the protective apron referred to in 41.1(3)*"a"*(5).

(3) The agency may grant exemptions to 41.1(5)*"h"*(2) where a sterile field will not permit the use of the normal protective barriers. Where the use of prefitted sterilized covers for the barriers is practical, the agency shall not permit such exemption.

i. Spot-film exposure reproducibility. Fluoroscopic systems equipped with spot-film (radiographic) mode shall meet the exposure reproducibility requirements of 41.1(6)*"d"* when operating in the spot-film mode.

j. Radiation therapy simulation systems. Radiation therapy simulation systems shall be exempt from all the requirements of 41.1(5)*"a," "c," "d,"* and *"g"* provided that:

(1) Such systems are designed and used in such a manner that no individual other than the patient is in the X-ray room during periods of time when the system is producing X-rays; and

(2) Systems which do not meet the requirements of 41.1(5)*"g"* are provided with a means of indicating the cumulative time that an individual patient has been exposed to X-rays. Procedures shall require in such cases that the timer be reset between examinations.

k. Dose-area-product monitor requirements.

(1) All fluoroscopic equipment installed after July 1, 2002, and used for special procedures (e.g., pacemaker implantation, diagnostic cardiac procedures (catheterization), and therapeutic cardiac procedures (angioplasty-balloon; stent; directional coronary atherectomy; rotational atherectomy; laser atherectomy; radio frequency ablation; and intravascular brachytherapy)) shall be equipped with a dose-area-product monitor capable of recording the total radiation dose received by a patient when the fluoroscopic tube is used. Equipment used and installed prior to July 1, 2002, shall be retrofitted with the radiation exposure device by January 1, 2004.

(2) Each facility using fluoroscopic equipment for special procedures shall include in the patient's chart and in a log for agency review the patient radiation exposure received per procedure. Adult doses that exceed 300 rad and doses for children (under the age of 18) that exceed 100 rad must be reviewed by the facility's radiation safety committee. The review must document the reason why a dose exceeded 300 rad for adults or 100 rad for children, and the reason must be documented in the committee's minutes. If

a facility does not have a radiation safety committee, the facility must provide the agency, within 30 days of the event, documentation stating why the patient's dose exceeded 300 rad for adults or 100 rad for children. Also, if the patient doses noted above are exceeded, the patient's physician must do a follow-up examination of the patient to determine if there is any evidence of dose recorded reaction and to ensure that proper treatment is rendered.

(3) All fluoroscopic radiation detection devices in this subrule shall be calibrated annually or after repair or replacement.

l. Equipment operation.

(1) All imaging formed by the use of fluoroscopic X-ray systems shall be directly viewed and interpreted by a licensed practitioner of the healing arts.

(2) Overhead fluoroscopy shall not be used as a positioning tool for general purpose radiographic examinations.

(3) Facilities that use fluoroscopic X-ray systems shall maintain a record of cumulative fluoroscopic exposure time used and the number of spot films for each examination. This record shall indicate patient identification, type of examination, date of examination, and operator's name.

m. Additional requirements for stationary fluoroscopic systems used for cardiac catheterization procedures.

(1) Protective barriers shall be available for use by individuals whose presence is required in the room during activation of the X-ray tube(s). If a protective barrier includes or consists of a transparent viewing panel, the viewing panel shall afford protection of not less than 0.5 millimeter of lead equivalent.

(2) Protective aprons of not less than 0.25 millimeter of lead equivalent shall be worn in the fluoroscopy room by all individuals (except the patient). Any individual required to be in the room for short periods of time may not be required to wear a protective apron if exposure levels below minimum as seen on film badge reports can be verified. Individuals not using protective aprons should follow ALARA by using time and distance to reduce exposure. Any declared pregnant individual must meet the requirements of 641—40.22(136C).

n. Supervision of fluoroscopy. The use of fluoroscopy by radiologic technologists and radiologic students shall be performed under the direct supervision of a licensed practitioner or an advanced registered nurse practitioner (ARNP), pursuant to 655—subrule 7.2(2), for the purpose of localization to obtain images for diagnostic or therapeutic purposes. The use of fluoroscopy by radiologist assistants shall be as defined in 641—42.6(136C).

41.1(6) *Radiographic systems other than fluoroscopic, dental intraoral, veterinary, or computed tomography X-ray systems.*

a. Beam limitation. The useful beam shall be limited to the area of clinical interest. This shall be considered met if a positive beam-limiting device meeting manufacturer's specifications and the requirements of 41.1(6)*"h"*(2) have been properly used or if evidence of collimation is shown on at least three sides or three corners of the film (for example, projections from the shutters of the collimator, cone cutting at the corners, or borders at the film's edge.)

(1) General purpose stationary and mobile X-ray systems and veterinarian systems (other than portable) installed after July 1, 1998.

1. Only X-ray systems provided with means for independent stepless adjustment of at least two dimensions of the X-ray field shall be used.

2. A method shall be provided for visually defining the perimeter of the X-ray field.

- Illuminance shall be greater than 7.5 foot-candles or 80.3 LUX at 100 centimeters or maximum SID whichever is less.
- The total misalignment of the edges of the visually defined field with the respective edges of the X-ray field along either the length or width of the visually defined field shall not exceed 2 percent of the distance from the source to the center of the visually defined field when the surface upon which it appears is perpendicular to the axis of the X-ray beam.

3. The agency may grant an exemption on noncertified X-ray systems to 41.1(6)*"a"*(1)"1" and "2" provided the registrant makes a written application for such exemption and in that application

demonstrates it is impractical to comply with 41.1(6)*"a"*(1)"1" and "2"; and the purpose of 41.1(6)*"a"*(1)"1" and "2" will be met by other methods.

(2) Additional requirements for stationary general purpose X-ray systems. In addition to the requirements of 41.1(6)*"a"*(1), stationary general purpose X-ray systems, both certified and noncertified, shall meet the following requirements:

1. A method shall be provided to indicate when the axis of the X-ray beam is perpendicular to the plane of the image receptor, to align the center of the X-ray field with respect to the center of the image receptor to within 2 percent of the SID, and to indicate the SID to within 2 percent;

2. The beam-limiting device shall indicate numerically the field size in the plane of the image receptor to which it is adjusted; and

3. Indication of field size dimensions and SIDs shall be specified in inches or centimeters, and shall be such that aperture adjustments result in X-ray field dimensions in the plane of the image receptor which correspond to those indicated by the beam-limiting device to within 2 percent of the SID when the beam axis is indicated to be perpendicular to the plane of the image receptor.

(3) X-ray systems designed for one image receptor size. Radiographic equipment designed for only one image receptor size at a fixed SID shall be provided with means to limit the field at the plane of the image receptor to dimensions no greater than those of the image receptor, and to align the center of the X-ray field with the center of the image receptor to within 2 percent of the SID, or shall be provided with means to both size and align the X-ray field such that the X-ray field at the plane of the image receptor does not extend beyond any edge of the image receptor.

(4) Systems designed for or provided with special attachments for mammography. Rescinded IAB 4/8/98, effective 7/1/98.

(5) X-ray systems other than those described in 41.1(6)*"a"*(1), (2), and (3), and veterinary systems installed prior to July 1, 1998, and all portable veterinary X-ray systems.

1. Means shall be provided to limit the X-ray field in the plane of the image receptor so that such field does not exceed each dimension of the image receptor by more than 2 percent of the SID when the axis of the X-ray beam is perpendicular to the plane of the image receptor.

2. Means shall be provided to align the center of the X-ray field with the center of the image receptor to within 2 percent of the SID, or means shall be provided to both size and align the X-ray field such that the X-ray field at the plane of the image receptor does not extend beyond any edge of the image receptor. Compliance shall be determined with the axis of the X-ray beam perpendicular to the plane of the image receptor.

3. 41.1(6)*"a"*(5)"1" and "2" may be met with a system that meets the requirements for a general purpose X-ray system as specified in 41.1(6)*"a"*(1) or, when alignment means are also provided, may be met with either:

- An assortment of removable, fixed-aperture, beam-limiting devices sufficient to meet the requirement for each combination of image receptor size and SID for which the unit is designed with each such device having clear and permanent markings to indicate the image receptor size and SID for which it is designed; or
- A beam-limiting device having multiple fixed apertures sufficient to meet the requirement for each combination of image receptor size and SID for which the unit is designed. Permanent, clearly legible markings shall indicate the image receptor size and SID for which each aperture is designed and shall indicate which aperture is in position for use.

b. Radiation exposure control devices.

(1) Timers.

1. Means shall be provided to initiate the radiation exposure by a deliberate action on the part of the operator, such as the depression of a switch. Radiation exposure shall not be initiated without such an action.

2. Means shall be provided to terminate the exposure at a preset time interval, preset product of current and time, a preset number of pulses, or a preset radiation exposure to the image receptor. In addition, it shall not be possible to make an exposure when the timer is set to a "zero" or "off" position if

either position is provided. Except for dental panoramic systems, termination of an exposure shall cause automatic resetting of the timer to its initial setting or to "zero."

(2) X-ray control.

1. Manual exposure control. An X-ray control shall be incorporated into each X-ray system such that an exposure can be terminated by the operator at any time except for exposure of one-half second or less, or during serial radiography when means shall be provided to permit completion of any single exposure of the series in process.

2. Each X-ray control shall be located in such a way as to meet the following requirements: Stationary X-ray systems (except podiatry and veterinary units) shall be required to have the X-ray exposure switch permanently mounted in a protected area so that the operator is required to remain in that protected area during the entire exposure and so that the operator can view the patient while making any exposures; and mobile and portable X-ray systems which are:

- Used for greater than one week in the same location, i.e., a room or suite, shall meet the requirements of 41.1(6)*"b"*(2)"2"; or
- Used for greater than one hour and less than one week at the same location, i.e., a room or suite, or in a clinical setting for routine extremities only, or where moving the X-ray system from room to room is impractical, shall meet the requirement of the above paragraph or be provided with a 6.5 foot (1.98 m) high protective barrier which is placed at least 2.7 meters (9 feet) from the tube housing assembly. Written procedures must instruct the operator to remain in the protected area during the entire exposure. Stationary podiatric systems which do not meet the above requirements shall be provided with a 9-foot exposure button cord which allows the operator to remain behind a protective barrier during the entire exposure. If the protective barrier is moveable, written procedures must be on file at the facility, which dictate that the operator will remain behind the barrier during the entire exposure.

3. The X-ray control shall provide visual indication observable at or from the operator's protected position whenever X-rays are produced. In addition, a signal audible to the operator shall indicate that the exposure has terminated.

(3) Automatic exposure controls. When an automatic exposure control is provided:

1. Indication shall be made on the control panel when this mode of operation is selected;

2. If the X-ray tube potential is equal to or greater than 50 kVp, the minimum exposure time for field emission equipment rated for pulsed operation shall be equal to or less than a time interval equivalent to 2 pulses;

3. The minimum exposure time for all equipment other than that specified in 41.1(6)*"b"*(3)"2" shall be equal to or less than one-sixtieth second or a time interval required to deliver 5 mAs, whichever is greater;

4. Either the product of peak X-ray tube potential, current, and exposure time shall be limited to not more than 60 kWs per exposure, or the product of X-ray tube current and exposure time shall be limited to not more than 600 mAs per exposure except that, when the X-ray tube potential is less than 50 kVp, the product of X-ray tube current and exposure time shall be limited to not more than 2000 mAs per exposure; and

5. A visible signal shall indicate when an exposure has been terminated at the limits required by 41.1(6)*"b"*(3)"4," and manual resetting shall be required before further automatically timed exposures can be made.

(4) Reproducibility. With a timer setting of 0.5 seconds or less, the average exposure period (T) shall be greater than or equal to five times the maximum exposure period (T_{max}) minus the minimum exposure period (T_{min}) when four timer tests are performed:

$$\overline{T} \geq 5\ (T_{max} - T_{min})$$

(5) Exposure duration (timer) linearity. For systems having independent selection of exposure time settings, the average ratios (X_1) of exposure to the indicated timer setting, in units of C $kg^{-1}s^{-1}$ (mR/s), obtained at any two clinically used timer settings shall not differ by more than 0.10 times their sum. This is written as:

$$(X_1 - X_2) \leq 0.1\ (X_1 + X_2)$$

where X_1 and X_2 are the average C $kg^{-1}s^{-1}$ (mR/s) values.

c. Source-to-skin distance. All mobile or portable radiographic systems shall be provided with means to limit the source-to-skin distance to equal to or greater than 30 centimeters except for veterinary systems.

d. Exposure reproducibility. When all technique factors are held constant, including control panel selections associated with automatic exposure control systems, the coefficient of variation of exposure for both manual and automatic exposure control systems shall not exceed 0.05. This requirement applies to clinically used techniques.

e. Radiation from capacitor energy storage equipment in standby status. Radiation emitted from the X-ray tube when the system is fully charged and the exposure switch or timer is not activated shall not exceed a rate of 2 milliroentgens (0.516 μC/kg) per hour at 5 centimeters from any accessible surface of the diagnostic source assembly, with the beam-limiting device fully open.

f. Accuracy. Deviation of measured technique factors from indicated values of kVp and exposure time shall not exceed the limits specified for that system by its manufacturer. In the absence of manufacturer's specifications, the deviation shall not exceed 10 percent of the indicated value for kVp and 20 percent for time.

g. mA/mAs linearity. The following requirements apply when the equipment is operated on a power supply as specified by the manufacturer for any fixed X-ray tube potential within the range of 40 percent to 100 percent of the maximum rated:

(1) Equipment having independent selection of X-ray tube current (mA). The average ratios (X_i) of exposure to the indicated milliampere-seconds product (C $kg^{-1}mAs^{-1}$ (or mR/mAs)) obtained at any two consecutive tube current settings shall not differ by more than 0.10 times their sum:

$$X_1 - X_2 \leq 0.10\ (X_1 + X_2)$$

where X_1 and X_2 are the average values obtained at each of two consecutive tube current settings, or at two settings differing by no more than a factor of 2 where the tube current selection is continuous.

(2) Equipment having a combined X-ray tube current-exposure time product (mAs) selector, but not a separate tube current (mA) selector. The average ratios (X_i) of exposure to the indicated milliampere-seconds product, in units of mR/mAs (or C $kg^{-1}mAs^{-1}$), obtained at any two consecutive mAs selector settings shall not differ by more than 0.10 times their sum:

$$X_1 - X_2 \leq 0.10\ (X_1 + X_2)$$

where X_1 and X_2 are the average values obtained at any two consecutive mAs selector settings, or at two settings differing by no more than a factor of 2 where the mAs selector provides continuous selection.

(3) Measuring compliance. Determination of compliance shall be based on 10 exposures taken within a time period of one hour, at each of the two settings. These two settings may include any two focal spot sizes except where one is equal to or less than 0.45 millimeters and the other is greater than 0.45 millimeters. For purposes of this requirement, focal spot size is the nominal focal spot size specified by the X-ray tube manufacturer.

h. Additional requirements applicable to certified systems only. Diagnostic X-ray systems incorporating one or more certified component(s) shall be required to comply with the following additional requirement(s) which relate to that certified component(s).

(1) Beam limitation for stationary and mobile general purpose X-ray systems.

1. There shall be provided a means of stepless adjustment of the X-ray field. The minimum field size at an SID of 100 centimeters shall be equal to or less than 5 centimeters by 5 centimeters.

2. When a light localizer is used to define the X-ray field, it shall provide an average illumination of not less than 160 lux or 15 foot-candles at 100 centimeters or at the maximum SID, whichever is less.

The average illumination shall be based upon measurements made in the approximate center of each quadrant of the light field. Radiation therapy simulation systems manufactured on and after May 27, 1980, are exempt from this requirement.

3. The edge of the light field at 100 centimeters or at the maximum SID, whichever is less, shall have a contrast ratio, corrected for ambient lighting, of not less than 4 in the case of beam-limiting devices designed for use on stationary equipment, and a contrast ratio of not less than 3 in the case of beam-limiting devices designed for use on mobile equipment. The contrast ratio is defined as I_1/I_2 where I_1 is the illumination 3 millimeters from the edge of the light field toward the center of the field; and I_2 is the illumination 3 millimeters from the edge of the light field away from the center of the field. Compliance shall be determined with a measuring instrument aperture of 1 millimeter in diameter.

(2) Beam limitation and alignment on stationary general purpose X-ray systems equipped with PBL. If PBL is being used, the following requirements shall be met:

1. PBL shall prevent the production of X-rays when

- Either the length or width of the X-ray field in the plane of the image receptor differs, except as permitted by 41.1(6)*"h"*(3), from the corresponding image receptor dimensions by more than 3 percent of the SID; or
- The sum of the length and width differences as stated in 41.1(6)*"h"*(2)"1" above without regard to sign exceeds 4 percent of the SID;

2. Compliance with 41.1(6)*"h"*(2)"1" shall be determined when the equipment indicates that the beam axis is perpendicular to the plane of the image receptor. Compliance shall be determined no sooner than 5 seconds after insertion of the image receptor;

3. The PBL system shall be capable of operation, at the discretion of the operator, such that the size of the field may be made smaller than the size of the image receptor through stepless adjustment of the field size. The minimum field size at an SID of 100 centimeters shall be equal to or less than 5 centimeters by 5 centimeters;

4. The PBL system shall be designed such that if a change in image receptor does not cause an automatic return to PBL function as described in 41.1(6)*"h"*(2)"1," then any change of image receptor size or SID must cause the automatic return.

(3) Beam limitation for portable X-ray systems. Beam limitation for portable X-ray systems shall meet the beam limitation requirements of 41.1(6)*"a"* or 41.1(6)*"h"*(2).

i. Tube stands for portable X-ray systems. A tube stand or other mechanical support shall be used for portable X-ray systems, so that the X-ray tube housing assembly need not be handheld during exposures.

j. Systems used in a clinical (nonsurgical) setting shall be restricted to one room within a location or suite which meets the requirements of 41.1(3)*"d."*

41.1(7) *Intraoral dental radiographic systems.* In addition to the provisions of 41.1(3) and 41.1(4), the requirements of 41.1(7) apply to X-ray equipment and associated facilities used for dental radiography. Requirements for extraoral dental radiographic systems are covered in 41.1(6). Only systems meeting the requirements of 41.1(7) shall be used.

a. Source-to-skin distance. X-ray systems designed for use with an intraoral image receptor shall be provided with means to limit source-to-skin distance to not less than:

(1) 18 centimeters if operable above 50 kVp, or

(2) 10 centimeters if not operable above 50 kVp.

b. Beam limitation. Radiographic systems designed for use with an intraoral image receptor shall be provided with means to limit the X-ray beam such that:

(1) If the minimum source-to-skin distance (SSD) is 18 centimeters or more, the X-ray field, at the minimum SSD, shall be containable in a circle having a diameter of no more than 7 centimeters; and

(2) If the minimum SSD is less than 18 centimeters, the X-ray field, at the minimum SSD, shall be containable in a circle having a diameter of no more than 6 centimeters.

(3) The position indicating device shall be shielded and open-ended. The shielding shall be equivalent to the requirements of 41.1(4)*"c."*

c. Exposure control.

(1) Exposure initiation.

1. Means shall be provided to initiate the radiation exposure by a deliberate action on the part of the operator, such as the depression of a switch. Radiation exposure shall not be initiated without such an action; and

2. It shall not be possible to make an exposure when the timer is set to a "zero" or "off" position if either position is provided.

(2) Exposure indication. Means shall be provided for visual indication observable at or from the operator's protected position whenever X-rays are produced. In addition, a signal audible to the operator shall indicate that the exposure has terminated except in X-ray systems that cannot be altered to meet this requirement.

(3) Exposure termination.

1. Means shall be provided to terminate the exposure at a preset time interval, preset product of current and time, a preset number of pulses, or a preset radiation exposure to the image receptor. In addition:

2. Termination of exposure shall cause automatic resetting of the timer to its initial setting or to "zero."

3. An X-ray control shall be incorporated into each X-ray system such that an exposure can be terminated by the operator at any time, except for exposures of one-half (½) second or less.

(4) Exposure duration (timer) linearity. For systems having independent selection of exposure time settings, the average ratios (X_1) of exposure to the indicated timer setting, in units of C $kg^{-2}s^{-1}$ (mR/s), obtained at any two clinically used timer settings shall not differ by more than 0.10 times their sum. This is written as:

$$(X_1 - X_2) \leq 0.1\ (X_1 + X_2)$$

where X_1 and X_2 are the average values.

(5) Each X-ray exposure switch shall be located in such a way as to meet the following requirements:

1. Stationary X-ray systems shall be required to have the X-ray exposure switch located in a protected area or have an exposure switch cord of sufficient length to permit the operator to activate the unit while in a protected area, e.g., corridor outside the operatory. The procedures required under 41.1(3)*"a"*(4) must instruct the operator to remain in the protected area during the entire exposure.

2. Mobile and portable X-ray systems which are:

- Used for greater than one week in the same location, i.e., a room or suite, shall meet the requirements of 41.1(7)*"c"*(5)"1."
- Used for greater than one hour and less than one week at the same location, i.e., a room or suite, shall meet the requirements of the above paragraph or be provided with a 6.5 foot (1.98 m) high protective barrier or means to allow the operator to be at least 9 feet (2.7 meters) from the tube housing assembly while making exposure.

3. Portable or hand-held dental X-ray systems designed with a backscatter shield may be used without the additional protective barrier, but the operator must wear a protective apron. The operator must stand directly behind the unit to allow the shield to function as designed.

d. Reproducibility. When the equipment is operated on an adequate power supply as specified by the manufacturer, the estimated coefficient of variation of radiation exposures shall be no greater than 0.05, for any specific combination of selected technique factors.

e. mA/mS linearity. The following requirements apply when the equipment is operated on a power supply as specified by the manufacturer for any fixed X-ray tube potential within the range of 40 percent to 100 percent of the maximum rated.

(1) Equipment having independent selection of X-ray tube current (mA). The average ratios (X_1) of exposure to the indicated milliampere-seconds product, in units of C kg^{-1} mAs^{-1} (or mR/mAs), obtained at any two consecutive tube current settings shall not differ by more than 0.10 times their sum:

$$(X_1 - X_2) \leq 0.1\ (X_1 + X_2)$$

where X_1 and X_2 are the average values obtained at each of two consecutive tube current settings, or at two settings differing by no more than a factor of 2 where the tube current selection is continuous.

(2) Equipment having a combined X-ray tube current-exposure time product (mAs) selector, but not a separate tube current (mA) selector. The average ratios (X_1) of exposure to the indicated milliampere-seconds product, in units of C kg^{-1} mAs^{-1} (or mR/mAs), obtained at any two consecutive mAs selector settings shall not differ by more than 0.10 times their sum:

$$(X_1 - X_2) \leq 0.1\ (X_1 + X_2)$$

where X_1 and X_2 are the average values obtained at any two mAs selector settings, or at two settings differing by no more than a factor of 2 where the mAs selector provides continuous selection.

(3) Measuring compliance. Determination of compliance shall be based on 10 exposures taken within a time period of one hour, at each of the two settings. These two settings may include any two focal spot sizes except where one is equal to or less than 0.45 millimeters and the other is greater than 0.45 millimeters. For purposes of this requirement, focal spot size is the nominal focal spot size specified by the X-ray tube manufacturer.

f. *Accuracy.* Deviation of technique factors from indicated values for kVp and exposure time (if time is independently selectable) shall not exceed the limits specified for that system by its manufacturer. In the absence of manufacturer's specifications the deviation shall not exceed 10 percent of the indicated value for kVp and 20 percent for time.

g. *kVp limitations.* Dental X-ray machine with a nominal fixed kVp of less than 50 kVp shall not be used to make diagnostic dental radiographs of humans.

h. *Administrative controls.*

(1) Patient and film holding devices shall be used when the techniques permit.

(2) The tube housing and the PID shall not be hand-held during an exposure.

(3) The X-ray system shall be operated in such a manner that the useful beam at the patient's skin does not exceed the requirements of 41.1(7)*"b"*(1).

(4) Dental fluoroscopy without image intensification shall not be used.

i. *Portable or hand-held dental X-ray systems.* Portable or hand-held dental X-ray systems designed with a backscatter shield shall:

(1) Be used only where it is impractical to us a portable dental system;

(2) Be used as the manufacturer indicates;

(3) Not be used with the backscatter shield removed, if applicable; and

(4) Be exempted from 41.1(4)*"g."*

41.1(8) Rescinded IAB 6/4/97, effective 7/9/97.

41.1(9) *Bone densitometry units.*

a. No additional shielding for the room is required.

b. Film badges, OSL devices, or TLDs must be issued for the first six months to all personnel operating the unit. If monitoring indicates no exposure, the IDPH may allow discontinuance of monitoring upon written request. When new procedures are started that have not been previously monitored, monitoring must be reinstated for six months and another request for discontinuance submitted to the agency.

c. Rescinded IAB 2/6/13, effective 3/13/13.

d. Specific operating procedures must be prepared and made available at the operator's position.

e. Bone densitometry on human patients shall be conducted only under a prescription of a licensed physician, a licensed physician assistant as defined in Iowa Code section 148C.1, subsection 6, or a licensed registered nurse who is registered as an advanced registered nurse practitioner pursuant to Iowa Code chapter 152.

f. During the operation of the bone densitometry system:

(1) The operator, ancillary personnel, and members of the general public shall be positioned at least one meter from the patient and bone densitometry system during the examination.

(2) The operator shall advise the patient that the bone densitometry examination is a type of X-ray procedure.

g. Equipment shall be maintained and operated in accordance with the manufacturer's specifications. Records of maintenance shall be kept for inspection by the agency.

41.1(10) *Veterinary medicine radiographic installations.*

a. Equipment.

(1) The protective tube housing shall be equivalent to the requirements of 41.1(4)*"c."*

(2) Diaphragms or cones shall be provided for collimating the useful beam to the area of clinical interest and shall provide the same degree of protection as is required of the housing.

(3) The total filtration permanently in the useful beam shall not be less than 0.5 millimeters aluminum equivalent for machines operating up to 50 kVp, 1.5 millimeters aluminum equivalent for machines operating between 50 and 70 kVp, and 2.5 millimeters aluminum equivalent for machines operating above 70 kVp.

b. Operator protection.

(1) All wall, ceiling, and floor areas shall be equivalent to or provided with applicable protective barriers to ensure compliance with 641—40.15(136C) and 40.21(136C) and subrule 40.26(1).

(2) All stationary, mobile or portable X-ray systems shall be provided with either a 2 meter (6.5 feet) high protective barrier for operator protections during exposures, or shall be provided with means to allow the operator to be at least 2.7 meters (9 feet) from the tube housing assembly during exposures.

c. Operating procedures. Veterinary medicine radiographic installations are exempt from the requirements of 641—41.1(136C) except for 641—subrules 41.1(3) and 41.1(10).

(1) No individual other than the operator shall be in the X-ray room while exposures are being made unless such individual's assistance is required, and

(2) The operator shall stand behind the protective barrier of 9 feet from the useful beam and the animal during radiographic exposures, or

(3) When an animal must be held in position during radiography, mechanical supporting or restraining devices should be used. If the animal must be held by an individual, that individual shall be protected with appropriate shielding devices, such as protective gloves and apron, and shall be so positioned that no part of the holder's body will be struck by the useful beam. The exposure of any individual used for this purpose shall be monitored.

41.1(11) *Computed tomography X-ray systems.*

a. Definitions. In addition to the definitions provided in 641—38.2(136C), 641—40.2(136C), and 41.1(2), the following definitions shall be applicable to 41.1(11):

"Computed tomography dose index" means the integral from –7T to +7T of the dose profile along a line perpendicular to the tomographic plane divided by the product of the nominal tomographic section thickness and the number of tomograms produced in a single scan, that is:

$$\overline{\text{CTDI}} = \frac{1}{nT} \int_{-7T}^{+7T} D(z)\, dz$$

where:

z = Position along a line perpendicular to the tomographic plane.

D(z)= Dose at position z.

T = Nominal tomographic section thickness.

n = Number of tomograms produced in a single scan.

This definition assumes that the dose profile is centered around z = 0 and that, for a multiple tomogram system, the scan increment between adjacent scans is nT.

"Contrast scale" means the change in the linear attenuation coefficient per CTN relative to water, that is:

$$\overline{CS} = \frac{\mu_x - \mu_w}{\overline{CTN}_x - \overline{CTN}_w}$$

where:

μ_x = Linear attenuation coefficient of the material of interest.

μ_w = Linear attenuation coefficient of water.

$\overline{CTN}_x$ = of the material of interest.

$\overline{CTN}_w$ = of water.

"CS" (see "Contrast scale").

"CT conditions of operation" means all selectable parameters governing the operation of a CT X-ray system including, but not limited to, nominal tomographic section thickness, filtration, and the technique factors as defined in 41.1(2).

"CTDI" (see "Computed tomography dose index").

"CT gantry" means the tube housing assemblies, beam-limiting devices, detectors, and the supporting structures and frames which hold these components.

"CTN" (see "CT number").

"CT number" means the number used to represent the X-ray attenuation associated with each elemental area of the CT image.

$$\overline{CTN} = \frac{k(\mu_x - \mu_w)}{\mu_w}$$

where:

k = A constant. (The constant has a normal value of 1,000 when the Houndsfield scale of CTN is used.)

μ_x = Linear attenuation coefficient of the material of interest.

μ_w = Linear attenuation coefficient of water.

"Dose profile" means the dose as a function of position along a line.

"Elemental area" means the smallest area within a tomogram for which the X-ray attenuation properties of a body are depicted (see also "Picture element").

"Multiple tomogram system" means a computed tomography X-ray system which obtains X-ray transmission data simultaneously during a single scan to produce more than one tomogram.

"Noise" means the standard deviation of the fluctuation in CTN expressed as a percentage of the attenuation coefficient of water. Its estimate (S_s) is calculated using the following expression:

$$S_n = \frac{100 \cdot \overline{CS} \cdot s}{\mu_w}$$

where:

$\overline{CS}$ = Linear attenuation coefficient of the material of interest.

μ_w = Linear attenuation coefficient of water.

s = Estimated standard deviation of the CTN of picture elements in a specified area of the CT image.

"Nominal tomographic section thickness" means the full width at half-maximum of the sensitivity profile taken at the center of the cross-sectional volume over which X-ray transmission data are collected.

"Picture element" means an elemental area of a tomogram.

"Reference plane" means a plane which is displaced from and parallel to the tomographic plane.

"Scan" means the complete process of collecting X-ray transmission data for the production of a tomogram. Data can be collected simultaneously during a single scan for the production of one or more tomograms.

"Scan increment" means the amount of relative displacement of the patient with respect to the CT X-ray system between successive scans measured along the direction of such displacement.

"Scan sequence" means a preselected set of two or more scans performed consecutively under preselected CT conditions of operation.

"Scan time" means the period of time between the beginning and end of X-ray transmission data accumulation for a single scan.

"Single tomogram system" means a CT X-ray system which obtains X-ray transmission data during a scan to produce a single tomogram.

"Tomographic plane" means that geometric plane which is identified as corresponding to the output tomogram.

"Tomographic section" means the volume of an object whose X-ray attenuation properties are imaged in a tomogram.

b. Requirements for equipment.

(1) Termination of exposure.

1. Means shall be provided to terminate the X-ray exposure automatically by either deenergizing the X-ray source or shuttering the X-ray beam in the event of equipment failure affecting data collection. Such termination shall occur within an interval that limits the total scan time to no more than 110 percent of its preset value through the use of either a backup timer or devices which monitor equipment function.

2. A visible signal shall indicate when the X-ray exposure has been terminated through the means required by 41.1(11)*"b"*(1)"1."

3. The operator shall be able to terminate the X-ray exposure at any time during a scan, or series of scans under CT X-ray system control, of greater than one-half second duration.

(2) Tomographic plane indication and alignment.

1. For any single tomogram system, means shall be provided to permit visual determination of the tomographic plane or a reference plane offset from the tomographic plane.

2. For any multiple tomogram system, means shall be provided to permit visual determination of the location of a reference plane. This reference plane can be offset from the location of the tomographic planes.

3. If a device using a light source is used to satisfy 41.1(11)*"b"*(2)"1" or "2," the light source shall provide illumination levels sufficient to permit visual determination of the location of the tomographic plane or reference plane under ambient light conditions of up to 500 lux.

(3) Beam-on and shutter status indicators and control switches.

1. The CT X-ray control and gantry shall provide visual indication whenever X-rays are produced and, if applicable, whether the shutter is open or closed.

2. Each emergency button or switch shall be clearly labeled as to its function.

(4) Indication of CT conditions of operation. The CT X-ray system shall be designed such that the CT conditions of operation to be used during a scan or a scan sequence shall be indicated prior to the initiation of a scan or a scan sequence. On equipment having all or some of these conditions of operation at fixed values, this requirement may be met by permanent markings. Indication of CT conditions of operation shall be visible from any position from which scan initiation is possible.

(5) Extraneous radiation. When data are not being collected for image production, the radiation adjacent to the tube port shall not exceed that permitted by 41.1(4)*"c."*

(6) Maximum surface CTDI identification. The angular position where the maximum surface CTDI occurs shall be identified to allow for reproducible positioning of a CT dosimetry phantom.

(7) Additional requirements applicable to CT X-ray systems containing a gantry manufactured after September 3, 1985.

1. The total error in the indicated location of the tomographic plane or reference plane shall not exceed 5 millimeters.

2. If the X-ray production period is less than one-half second, the indication of X-ray production shall be actuated for at least one-half second. Indicators at or near the gantry shall be discernible from any point external to the patient opening where insertion of any part of the human body into the primary beam is possible.

3. The deviation of indicated scan increment versus actual increment shall not exceed plus or minus 1 millimeter with any mass from 0 to 100 kilograms resting on the support device. The patient support device shall be incremented from a typical starting position to the maximum incremented distance or 30 centimeters, whichever is less, and then returned to the starting position. Measurement of actual versus indicated scan increment may be taken anywhere along this travel.

4. Premature termination of the X-ray exposure by the operator shall necessitate resetting of the CT conditions of operation prior to the initiation of another scan.

c. Facility design requirements.

(1) Aural communication. Provision shall be made for two-way aural communication between the patient and the operator at the control panel.

(2) Viewing systems.

1. Windows, mirrors, closed-circuit television, or an equivalent shall be provided to permit continuous observation of the patient during irradiation and shall be so located that the operator can observe the patient from the control panel.

2. When the primary viewing system is by electronic means, an alternate viewing system (which may be electronic) shall be available for use in the event of failure of the primary viewing system.

d. Surveys, calibrations, spot checks, and operating procedures.

(1) Surveys.

1. All CT X-ray systems shall have a survey made by, or under the direction of, a qualified expert. In addition, such surveys shall be done after any change in the facility or equipment which might cause a significant increase in radiation hazard.

2. The registrant shall obtain a written report of the survey from the qualified expert, and a copy of the report shall be made available to the agency upon request.

(2) Radiation calibrations.

1. The calibration of the radiation output of the CT X-ray system shall be performed by, or under the direction of, a qualified expert who is physically present at the facility during such calibration.

2. The calibration of a CT X-ray system shall be performed at intervals specified by a qualified expert and after any change or replacement of components which, in the opinion of the qualified expert, could cause a change in the radiation output.

3. The calibration of the radiation output of a CT X-ray system shall be performed with a calibrated dosimetry system. The calibration of such system shall be traceable to a national standard. The dosimetry system shall have been calibrated within the preceding two years.

4. CT dosimetry phantom(s) shall be used in determining the radiation output of a CT X-ray system. Such phantom(s) shall meet the following specifications and conditions of use: CT dosimetry phantom(s) shall be right circular cylinders of polymethyl methacrylate of density 1.19 plus or minus 0.01 grams per cubic centimeter. The phantom(s) shall be at least 14 centimeters in length and shall have diameters of 32.0 centimeters for testing CT X-ray systems designed to image any section of the body and 16.0 centimeters for systems designed to image the head or for whole body scanners operated in the head scanning mode; CT dosimetry phantom(s) shall provide means for the placement of a dosimeter(s) along the axis of rotation and along a line parallel to the axis of rotation 1.0 centimeter from the outer surface and within the phantom. Means for the placement of dosimeters or alignment devices at other locations may be provided; any effects on the doses measured due to the removal of phantom material to accommodate dosimeters shall be accounted for through appropriate corrections to the reported data or included in the statement of maximum deviation for the values obtained using the phantom; and all dose measurements shall be performed with the CT dosimetry phantom placed on the patient couch or support device without additional attenuation materials present.

5. The calibration shall be required for each type of head, body, or whole-body scan performed at the facility.

6. Calibration shall meet the following requirements: The dose profile along the center axis of the CT dosimetry phantom for the minimum, maximum, and midrange values of the nominal tomographic section thickness used by the registrant shall be measurable. Where less than three nominal tomographic thicknesses can be selected, the dose profile determination shall be performed for each available nominal tomographic section thickness; the CTDI[3] along the two axes specified in 41.1(11)*"d"*(2)"4" shall be measured. (For the purpose of determining the CTDI, the manufacturer's statement as to the nominal tomographic section thickness for that particular system may be utilized.) The CT dosimetry phantom shall be oriented so that the measurement point 1.0 centimeter from the outer surface and within the phantom is in the same angular position within the gantry as the point of maximum surface CTDI identified. The CT conditions of operation shall correspond to typical values used by the registrant; and the spot checks specified in 41.1(11)*"d"*(3) shall be made.

7. Calibration procedures shall be in writing. Records of calibrations performed shall be maintained for inspection by the agency.

(3) Spot checks.

1. The spot-check procedures shall be in writing and shall have been developed by a qualified expert.

2. The spot-check procedures shall incorporate the use of a CT dosimetry phantom which has a capability of providing an indication of contrast scale, noise, nominal tomographic section thickness, the resolution capability of the system for low and high contrast objects, and measuring the mean CTN for water or other reference material.

3. All spot checks shall be included in the calibration required by 41.1(11)*"d"*(2) and at time intervals and under system conditions specified by a qualified expert.

4. Spot checks shall include acquisition of images obtained with the CT dosimetry phantom(s) using the same processing mode and CT conditions of operation as are used to perform calibrations required by 41.1(11)*"d"*(2). The images shall be retained, until a new calibration is performed, in two forms as follows: photographic copies of the images obtained from the image display device; and images stored in digital form on a storage medium compatible with the CT X-ray system.

5. Written records of the spot checks performed shall be maintained for inspection by the agency.

(4) Operating procedures.

1. The CT X-ray system shall not be operated except by a licensed practitioner or an individual who has been specifically trained in its operation and holds a current permit to practice as a general radiologic technologist as defined under the provisions of 641—Chapter 42.

41.1(12) *X-ray machines used for mammography.* Rescinded IAB 4/8/98, effective 7/1/98.

[**ARC 8659B**, IAB 4/7/10, effective 5/12/10; **ARC 0577C**, IAB 2/6/13, effective 3/13/13; **ARC 1639C**, IAB 10/1/14, effective 11/5/14]

641—41.2(136C) Use of radionuclides in the healing arts.

41.2(1) *Purpose and scope.*

a. This rule establishes requirements and provisions for the use of radionuclides in the healing arts and for issuance of licenses authorizing the medical use of this material. These requirements and provisions provide for the protection of the public health and safety. The requirements and provisions of this rule are in addition to, and not in substitution for, the applicable portions of 641—Chapters 38 to 40. The requirements and provisions of these rules apply to applicants and licensees subject to this rule unless specifically exempted.

b. All references to any Code of Federal Regulations (CFR) in this chapter are those in effect as of November 5, 2014.

41.2(2) *Definitions.* For the purpose of this chapter, the definitions of 641—Chapters 38 to 40 may also apply. As used in 41.2(136C), the following definitions apply:

"Area of use" means a portion of a physical structure that has been set aside for the purpose of receiving, using, or storing radioactive material.

"Authorized medical physicist" means an individual who:

a. Meets the requirements of 41.2(74) and 41.2(77); or

b. Is identified as an authorized medical physicist or teletherapy physicist on:

1. A specific medical use license issued by this agency, the NRC, or an agreement state;
2. A medical use permit issued by an NRC master material licensee;
3. A permit issued by an NRC or agreement state broad scope medical use licensee; or
4. A permit issued by an NRC master material license broad scope medical use permittee.

"Authorized nuclear pharmacist" means a pharmacist who:

a. Has met the appropriate requirements of 41.2(77) and 41.2(78), or before May 3, 2006, meets the requirements in 10 CFR 35.980(a) and 10 CFR 35.59; or:

b. Is identified as an authorized nuclear pharmacist on:

1. A specific license issued by the agency, NRC or agreement state that authorizes medical use or the practice of nuclear pharmacy;
2. A permit issued by an NRC master material licensee that authorizes medical use or the practice of nuclear pharmacy;
3. A permit issued by the NRC or agreement state broad scope medical use licensee that authorizes medical use or the practice of nuclear pharmacy; or
4. A permit issued by an NRC master material license broad scope medical use permittee that authorizes medical use or the practice of nuclear pharmacy; or

c. Is identified as an authorized nuclear pharmacist by a commercial nuclear pharmacy that has been authorized to identify authorized nuclear pharmacists; or

d. Is designated as an authorized nuclear pharmacist in accordance with 641—39.4(29)*"j"*(2)"3."

"Authorized user" means a physician, dentist, or podiatrist who has met the appropriate requirements of 41.2(67)*"a,"*41.2(68)*"a,"*41.2(69)*"a,"*41.2(70)*"a,"*41.2(72)*"a,"*41.2(73)*"a,"*41.2(81)*"a,"* or 41.2(82)*"a,"* or before May 3, 2006, meets the requirements in 10 CFR 35.910(a), 35.920(a), 35.930(c), 35.940(a), 35.950(a), or 35.960(a) and 10 CFR 35.59; or who is identified on:

1. A current Iowa, NRC, or agreement state license that authorizes the medical use of radioactive material;
2. A permit issued by an NRC master material licensee that is authorized to permit the medical use of radioactive material;
3. A permit issued by an NRC, agreement state, or Iowa-specific licensee of broad scope that is authorized to permit medical use of radioactive material; or
4. A permit issued by an NRC master material license broad scope permittee that is authorized to permit medical use of radioactive material.

"Dedicated check source" means a radioactive source that is used to ensure the constant operation of a radiation detection or measurement device over several months or years. This source may also be used for other purposes.

"Management" means the chief executive officer or that individual's designee.

"Medical institution" means an organization in which several medical disciplines are practiced.

"Mobile nuclear medicine service" means the transportation and medical use of radioactive material.

"Output" means the exposure rate, dose rate, or a quantity related in a known manner to these rates from a teletherapy unit for a specified set of exposure conditions.

"Pharmacist" means an individual licensed by a state or territory of the United States, the District of Columbia, or the Commonwealth of Puerto Rico to practice pharmacy.

"Radiation safety officer" means an individual who, in addition to the definition in 641—38.2(136C), meets the requirements of 41.2(77) and 41.2(65)*"a,"* or 41.2(65)*"c"*(1), or before May 3, 2006, meets the requirements in 10 CFR 35.900(a) and 10 CFR 35.59; or is identified as a radiation safety officer on a specific medical use license issued by Iowa, the NRC, or agreement state or a medical use permit issued by an NRC master material licensee.

"Teletherapy physicist" means an individual identified as the qualified teletherapy physicist on an agency license.

"Unit dosage" means a dosage prepared for medical use for administration as a single dosage to a patient or human research subject without any further manipulation of the dosage after it is initially prepared.

"Visiting authorized user" means an authorized user who is not identified on the license of the licensee being visited.

41.2(3) *License required.*

a. No person shall manufacture, produce, acquire, receive, possess, use, or transfer radioactive material for medical use except in accordance with a specific license issued pursuant to these rules.

b. Unless prohibited by license condition, an individual may receive, possess, use, or transfer radioactive material in accordance with these rules under the supervision of an authorized user as provided in 41.2(11).

c. An individual may prepare unsealed radioactive material for medical use in accordance with these rules under the supervision of an authorized nuclear pharmacist or authorized user as provided in 41.2(11) unless prohibited by license condition.

d. A licensee may conduct research involving human subjects using radioactive material provided that the research is conducted, funded, supported, or regulated by another federal agency which has implemented the Federal Policy for the Protection of Human Subjects. Otherwise, a licensee shall apply for and receive approval of a specific amendment to its license before conducting such research. Both types of licensees shall, at a minimum, obtain informed consent from the human subjects and obtain prior review and approval of the research activities by an Institutional Review Board in accordance with the meaning of these terms as defined and described in the Federal Policy for the Protection of Human Subjects.

Nothing in this subrule relieves the licensee from complying with applicable FDA, federal, and other state requirements governing radioactive drugs or devices.

e. An applicant that satisfies the requirements of 641—paragraph 39.4(28)*"b"* may apply for a Type A specific license of broad scope.

41.2(4) *License amendments.* A licensee shall apply for and receive a license amendment:

a. Before using radioactive material for a method or type of medical use not permitted by the license issued under this rule;

b. Before permitting anyone, except a visiting authorized user or visiting authorized nuclear pharmacist described in 41.2(12), to work as an authorized user or authorized nuclear pharmacist under the license;

c. Before changing a radiation safety officer, teletherapy physicist or authorized medical physicist;

d. Before receiving radioactive material in excess of the amount authorized on the license;

e. Before adding to or changing the address or addresses of use identified in the application or on the license; and

f. Before changing statements, representations, and procedures which are incorporated into the license.

41.2(5) *Notifications.*

a. A licensee shall provide to the agency a copy of the board certification, the NRC or agreement state license, or the permit issued by a licensee of broad scope for each individual no later than 30 days after the date that the licensee permits the individual to work as a visiting authorized user or a visiting authorized nuclear pharmacist.

b. A licensee shall notify the agency by letter no later than 30 days after:

(1) An authorized user, an authorized nuclear pharmacist, radiation safety officer, or teletherapy physicist permanently discontinues performance of duties under the license or has a name change; or

(2) The licensee's mailing address changes.

c. The licensee shall mail the documents required in this subrule to the Iowa Department of Public Health, Des Moines, Iowa.

d. Exemptions regarding Type A specific licenses of broad scope. A licensee possessing a Type A specific license of broad scope for medical use is exempt from the following:

(1) The provision of 41.2(4)*"b"*;

(2) The provisions of 41.2(4)*"e"* regarding additions to or changes in the areas of use only at the addresses specified in the license;

(3) The provision of 41.2(5)*"a"*;

(4) The provisions of 41.2(5)*"b"*(1) for authorized user or an authorized nuclear pharmacist.

41.2(6) *Maintenance of records.*

a. Each record required by this rule must be legible throughout the retention period specified by each subrule. The record may be original or reproduced copy or a microform, provided that the copy or microform is authenticated by authorized personnel and that the microform is capable of producing a clear copy throughout the required retention period.

b. The record may also be stored on electronic media with the capability for producing legible, accurate, and complete records during the required retention period. Records such as letters, drawings, and specifications must include all pertinent information such as stamps, initials, and signatures.

c. The licensee shall maintain adequate safeguards against tampering with and loss of records specified in 41.2(6)*"a"* and *"b."*

41.2(7) *ALARA program.*

a. Each licensee shall develop and implement a written program to maintain radiation doses and releases of radioactive material in effluents to unrestricted areas as low as reasonably achievable in accordance with 641—subrule 40.1(3).

b. To satisfy the requirement of 41.2(7)*"a"*:

(1) The management, radiation safety officer, and all authorized users shall participate in the establishment, implementation, and operation of the program as required by these rules or the radiation safety committee; or

(2) For licensees that are not medical institutions, management and all authorized users shall participate in the program as required by the radiation safety officer.

c. The ALARA program shall include an annual review by the radiation safety committee for licensees that are medical institutions, or management and the radiation safety officer for licensees that are not medical institutions, of summaries of the types and amounts of radioactive material used, occupational dose reports, and continuing education and training for all personnel who work with or in the vicinity of radioactive material. The purpose of the review is to ensure that individuals make every reasonable effort to maintain occupational doses, doses to the general public, and releases of radioactive material as low as reasonably achievable, taking into account the state of technology, and the cost of improvements in relation to benefits.

d. The licensee shall retain a current written description of the ALARA program for the duration of the license. The written description shall include:

(1) A commitment by management to keep occupational doses as low as reasonably achievable;

(2) A requirement that the radiation safety officer brief management once each year on the radiation safety program;

(3) Personnel exposure investigational levels as established in accordance with 41.2(9)*"b"*(8) that, when exceeded, will initiate an investigation by the radiation safety officer of the cause of the exposure; and

(4) Personnel exposure investigational levels that, when exceeded, will initiate a prompt investigation by the radiation safety officer of the cause of the exposure and a consideration of actions that might be taken to reduce the probability of recurrence.

41.2(8) *Radiation safety officer.*

a. A licensee shall appoint a radiation safety officer responsible for implementing the radiation safety program. The licensee, through the radiation safety officer, shall ensure that radiation safety activities are being performed in accordance with approved procedures and regulatory requirements in the daily operation of the licensee's radioactive material program.

b. The radiation safety officer shall:

(1) Investigate overexposures, accidents, spills, losses, thefts, unauthorized receipts, uses, transfers, and disposals, and other deviations from approved radiation safety practice and implement corrective actions as necessary;

(2) Implement written policy and procedures for:

1. Authorizing the purchase of radioactive material;
2. Receiving and opening packages of radioactive material;

3. Storing radioactive material;
4. Keeping an inventory record of radioactive material;
5. Using radioactive material safely;
6. Taking emergency action if control of radioactive material is lost;
7. Performing periodic radiation surveys;
8. Performing checks and calibrations of survey instruments and other safety equipment;
9. Disposing of radioactive material;
10. Training personnel who work in or frequent areas where radioactive material is used or stored; and
11. Keeping a copy of all records and reports required by the agency rules, a copy of these rules, a copy of each licensing request and license and amendments, and the written policy and procedures required by the rules; and

(3) For medical use not sited at a medical institution, approve or disapprove radiation safety program changes with the advice and consent of management prior to submittal to the agency for licensing action; or

(4) For medical use sited at a medical institution, assist the radiation safety committee in the performance of its duties.

41.2(9) *Radiation safety committee.* Each medical institution licensee shall establish a radiation safety committee to oversee the use of radioactive material.

a. The committee shall meet the following administrative requirements:

(1) Membership must consist of at least three individuals and shall include an authorized user of each type of use permitted by the license, the radiation safety officer, a representative of the nursing service, and a representative of management who is neither an authorized user nor a radiation safety officer. Other members may be included as the licensee deems appropriate.

(2) The committee shall meet at least once each calendar quarter.

(3) Rescinded IAB 10/1/14, effective 11/5/14.

(4) The minutes of each radiation safety committee meeting shall include:

1. The date of the meeting;
2. Members present;
3. Members absent;
4. Summary of deliberations and discussions;
5. Recommended actions and the numerical results of all ballots; and
6. Document any reviews required in 41.2(7)*"c"* and 41.2(9)*"b."*

(5) The committee shall provide each member with a copy of the meeting minutes and retain one copy until the agency authorizes its disposition.

b. To oversee the use of licensed material, the committee shall:

(1) Be responsible for monitoring the institutional program to maintain occupational doses as low as reasonably achievable;

(2) Review:

1. Review, on the basis of safety and with regard to the training and experience standards of this rule, and approve or disapprove any individual who is to be listed as an authorized user, an authorized nuclear pharmacist, the radiation safety officer, or teletherapy physicist before submitting a license application or request for amendment or renewal;

2. Review on the basis of the board certification, the license, or the permit identifying an individual, and approve or disapprove any individual prior to allowing that individual to work as an authorized user or authorized nuclear pharmacist.

(3) Review on the basis of safety and approve or disapprove each proposed method of use of radioactive material;

(4) Review on the basis of safety, and approve with the advice and consent of the radiation safety officer and the management representative, or disapprove procedures and radiation safety program changes prior to submittal to the agency for licensing action;

(5) Review quarterly, with the assistance of the radiation safety officer, occupational radiation exposure records of all personnel working with radioactive material;

(6) Review quarterly, with the assistance of the radiation safety officer, all incidents involving radioactive material with respect to cause and subsequent actions taken;

(7) Review annually, with the assistance of the radiation safety officer, the radioactive material program; and

(8) Establish a table of investigational levels for occupational dose that, when exceeded, will initiate investigations and considerations of action by the radiation safety officer.

41.2(10) *Authority and responsibilities for the radiation protection program.*

a. In addition to the radiation protection program requirements of 641—40.10(136C), a licensee's management shall approve in writing:

(1) Requests for a license application, renewal, or amendment before submittal to this agency;

(2) Any individual before allowing that individual to work as an authorized user, authorized nuclear pharmacist, or authorized medical physicist; and

(3) Radiation protection program changes that do not require a license amendment.

b. A licensee's management shall appoint a radiation safety officer, who agrees, in writing, to be responsible for implementing the radiation protection program. The licensee, through the radiation safety officer, shall ensure that the radiation safety activities are being performed in accordance with licensee-approved procedures and regulatory requirements.

c. For up to 60 days each year, a licensee may permit an authorized user or an individual qualified to be a radiation safety officer under 41.2(65) or 41.2(75) to function as a temporary radiation safety officer to perform the functions of radiation safety officer, as provided in 41.2(10)*"g,"* if the licensee takes the actions required in 41.2(10)*"b," "e," "g,"* and *"h"* and notifies this agency in accordance with 41.2(5).

d. A licensee may simultaneously appoint more than one temporary radiation safety officer in accordance with 41.2(10)*"c"* if needed to ensure that the licensee has a temporary radiation safety officer who satisfies the requirements to be a radiation safety officer for each of the different types of by-product material permitted on the license.

e. A licensee shall establish the authority, duties, and responsibilities of the radiation safety officer in writing.

f. Licensees that are authorized for two or more different types of uses of radioactive materials or two or more types of units under this rule shall establish a radiation safety committee to oversee all uses of radioactive material permitted by the license.

g. A licensee shall provide the radiation safety officer sufficient authority, organizational freedom, time, resources, and management prerogative to:

(1) Identify radiation safety problems;

(2) Initiate, recommend, or provide corrective solutions;

(3) Verify implementation of corrective actions; and

(4) Stop unsafe operations.

h. A licensee shall retain a record of actions taken under 41.2(10) in accordance with 641—40.80(136C).

41.2(11) *Supervision.*

a. A licensee that permits the receipt, possession, use, or transfer of radioactive material by an individual under the supervision of an authorized user as allowed by 41.2(3) shall, in addition to the requirements in 641—40.111(136C):

(1) Instruct the supervised individual in the licensee's written radiation protection procedures, written directive procedures, rules of this chapter, and license conditions appropriate to that individual's use of radioactive material;

(2) Review the supervised individual's use of radioactive material, provide reinstruction as needed and review records kept to reflect this use;

(3) Require the authorized user to be immediately available to communicate with the supervised individual;

(4) Require the authorized user to be able to be physically present and available to the supervised individual on one hour's notice (the supervising authorized user need not be present for each use of radioactive material); and

(5) Require that only those individuals certified and issued a current permit to practice in accordance with 641—Chapter 42 as a nuclear medicine technologist or a radiation therapist, as applicable, or an Iowa-licensed physician and designated by the authorized user, shall be permitted to administer radionuclides (sealed sources only for radiation therapists) or radiation to patients or human research subjects. For a nuclear medicine technologist or a radiation therapist, the individual's permit to practice shall be made available at the individual's place of employment. If the permit holder works at more than one facility, a duplicate of the permit shall be kept at each facility.

b. A license shall require the supervised individual receiving, possessing, using or transferring radioactive material under 41.2(3) to:

(1) Follow the instructions of the supervising authorized user for the medical uses of by-product material;

(2) Follow the written radiation protection and written directive procedures established by the radiation safety officer; and

(3) Comply with these rules and the license conditions with respect to the use of radioactive material.

c. A licensee that permits the preparation of radioactive material for medical use by an individual under the supervision of an authorized nuclear pharmacist or physician who is an authorized user, as allowed by 41.2(3)*"c,"* shall, in addition to the requirements in 641—40.111(136C):

(1) Instruct the supervised individual in the preparation of radioactive material for medical use and the principles of and procedures for radiation safety and in the licensee's written procedures for maintaining written directives, as appropriate to that individual's use of radioactive material;

(2) Require the supervised individual to follow the instructions of the supervising authorized user or authorized nuclear pharmacist regarding the preparation of radioactive material for medical use, written radiation protection procedures established by the licensee, the regulations of this chapter and license conditions; and

(3) Require the supervising authorized nuclear pharmacist or physician who is an authorized user to periodically review the work of the supervised individual as it pertains to preparing radioactive material for medical use and the records kept to reflect that work.

d. A licensee that supervises an individual is responsible for the acts and omissions of the supervised individual.

41.2(12) *Visiting authorized user and visiting authorized nuclear pharmacist.*

a. A licensee may permit any visiting authorized user or visiting authorized nuclear pharmacist to use licensed material for medical use under the terms of the licensee's license for 60 days each year if:

(1) The visiting authorized user or visiting authorized nuclear pharmacist has the prior written permission of the licensee's management and, if the use occurs on behalf of an institution, the institution's radiation safety committee;

(2) The licensee has a copy of an agency, agreement state, licensing state or U.S. Nuclear Regulatory Commission license that identifies the visiting authorized user or visiting authorized nuclear pharmacist by name as an authorized user for medical use; and

(3) Only those procedures for which the visiting authorized user or visiting authorized nuclear pharmacist is specifically authorized by an agency (agreement state, licensing state or U.S. Nuclear Regulatory Commission) license are performed by that individual.

b. A licensee need not apply for a license amendment in order to permit a visiting authorized user or visiting authorized nuclear pharmacist to use licensed material as described in 41.2(12)*"a."*

c. A licensee shall retain copies of the records specified in 41.2(12)*"a"* for five years from the date of the last visit.

41.2(13) *Mobile nuclear medicine service administrative requirements.*

a. The agency will only license mobile nuclear medicine services in accordance with this rule and other applicable requirements of these rules.

b. Mobile nuclear medicine service licensees shall retain for the duration of service a letter signed by the management of each location where services are rendered that authorizes use of radioactive material and clearly delineates the authority of the licensee and client.

c. If a mobile nuclear medicine service provides services that the client is also authorized to provide, the client is responsible for ensuring that services are conducted in accordance with the rules in this chapter while the mobile nuclear medicine service is under the client's direction.

d. A mobile nuclear medicine service shall not have radioactive material delivered directly from the manufacturer or the distributor to the client's address of use.

e. Mobile nuclear medicine service licensees shall also perform the following:

(1) Check instruments used to measure the activity of unsealed radioactive material for proper function before use at each client's address or on each day of use, whichever is more frequent. At a minimum, the check for proper function required by this rule must include a constancy check;

(2) Check survey instruments for proper operation with a dedicated check source before use at each client's address;

(3) Before leaving a client's address, survey all areas of use to ensure compliance with the requirements of 641—Chapters 40 and 41.

41.2(14) *Records and reports of misadministrations and reportable medical events.*

a. When a misadministration or reportable medical event, as defined in 641—38.2(136C), occurs, the licensee shall notify the agency by telephone. The licensee shall also notify the referring physician of the affected patient or human research subject and the patient or human research subject or a responsible relative or guardian, unless the referring physician agrees to inform the patient or human research subject or believes, based on medical judgment, that telling the patient or human research subject or the patient's or human research subject's responsible relative or guardian would be harmful to one or the other, respectively. These notifications must be made within 24 hours after the licensee discovers the misadministration or reportable medical event. If the referring physician, patient or human research subject, or the patient's or human research subject's responsible relative or guardian cannot be reached within 24 hours, the licensee shall notify them as soon as practicable. The licensee is not required to notify the patient or human research subject or the patient's or human research subject's responsible relative or guardian without first consulting the referring physician; however, the licensee shall not delay medical care for the patient or human research subject because of this notification requirement including remedial care as a result of the misadministration or reportable medical event because of any delay in notification.

b. Written reports.

(1) The licensee shall submit a written report to the agency within 15 days after discovery of the misadministration or reportable medical event. The written report must include the licensee's name, the prescribing physician's name, a brief description of the event, why the event occurred, the effect on the patient or the human research subject, what improvements are needed to prevent recurrence, actions taken to prevent recurrence, whether the licensee notified the patient or the human research subject or the patient's or the human research subject's responsible relative or guardian (this individual will subsequently be referred to as "the patient or the human research subject"), and if not, why not, and if the patient or the human research subject was notified, what information was provided to that individual. The report must not include the patient's or the human research subject's name or other information that could lead to identification of the patient or the human research subject.

(2) If the patient or the human research subject was notified, the licensee shall also furnish, within 15 days after discovery of the misadministration or reportable medical event, a written report to the patient or the human research subject and the referring physician by sending either:

1. A copy of the report that was submitted to the agency; or

2. A brief description of both the event and the consequences as they may affect the patient or the human research subject, provided a statement is included that the report submitted to the agency can be obtained from the licensee.

c. Rescinded IAB 4/4/01, effective 5/9/01.

d. Each licensee shall retain a record of each misadministration for ten years and each reportable medical event for three years. The record shall contain the names of all individuals involved in the event, including the physician, allied health personnel, the patient or human research subject, and the patient's or human research subject's referring physician, the patient's or human research subject's social security number or identification number if one has been assigned, a brief description of the event, why it occurred, the effect on the patient or human research subject, what improvements are needed to prevent recurrence, and the action taken, if any, to prevent recurrence.

e. Aside from the notification requirement, nothing in 41.2(14)*"a"* to 41.2(14)*"d"* shall affect any rights or duties of licensees and physicians in relation to each other, patients or human research subjects, or responsible relatives or guardians.

f. Report and notification of a dose to an embryo/fetus or a nursing child.

(1) A licensee shall report any dose to an embryo/fetus that is greater than 5 rem (50 mSv) dose equivalent that is a result of an administration of by-product material or radiation from by-product material to a pregnant individual unless the embryo/fetus was specifically approved, in advance, by the authorized user.

(2) A licensee shall report any dose to a nursing child that is a result of an administration of by-product material to a breast-feeding individual that:

1. Is greater than 5 rem (50 mSv) total effective dose equivalent; or

2. Has resulted in unintended permanent functional damage to an organ or a physiological system of the child, as determined by a physician.

(3) The licensee shall notify this agency by telephone no later than the next calendar day after a dose to the embryo/fetus or nursing child that requires a report in 41.2(14)*"f"*(1) or (2).

(4) The licensee shall submit a written report to the agency within 15 days after discovery of a dose to the embryo/fetus or nursing child that requires a report in 41.2(14)*"f"*(1) or (2).

1. The written report must include:

- The licensee's name;
- The name of the prescribing physician;
- A brief description of the event;
- Why the event occurred;
- The effect, if any, on the embryo/fetus or the nursing child;
- What actions, if any, have been taken or are planned to prevent recurrence; and
- Certification that the licensee notified the pregnant individual or mother (or the mother's or child's responsible relative or guardian), and if not, why not.

2. The report must not contain the individual's or child's name or any other information that could lead to identification of the individual or child.

(5) The licensee shall provide notification of the event to the referring physician and also notify the pregnant individual or mother, both hereafter referred to as the mother, no later than 24 hours after discovery of an event that would require reporting under 41.2(14)*"f"*(1) or (2), unless the referring physician personally informs the licensee either that the physician will inform the mother or that, based on medical judgment, telling the mother would be harmful. The licensee is not required to notify the mother without first consulting with the referring physician. If the referring physician or mother cannot be reached within 24 hours, the licensee shall make the appropriate notifications as soon as possible thereafter. The licensee may not delay any appropriate medical care for the embryo/fetus or for the nursing child, including any necessary remedial care as a result of the event, because of any delay in notification. To meet the requirements of this paragraph, the notification may be made to the mother's or child's responsible relative or guardian instead of the mother. If a verbal notification is made, the licensee shall inform the mother, or the mother's or child's responsible relative or guardian, that a written description of the event can be obtained from the licensee upon request. The licensee shall provide such a written description if requested.

(6) A licensee shall:

1. Annotate a copy of the report provided to the agency with the:

- Name of the pregnant individual or the nursing child who is the subject of the event; and

- Social security number or other identification number, if one has been assigned, of the pregnant individual or the nursing child who is the subject of the event; and

2. Provide a copy of the annotated report to the referring physician, if other than the licensee, no later than 15 days after the discovery of the event.

41.2(15) *Suppliers.* A licensee shall use for medical use only:

a. Radioactive material manufactured, labeled, packaged, and distributed in accordance with a license issued pursuant to these rules or the equivalent regulations of another agreement state, a licensing state or the U.S. Nuclear Regulatory Commission; and

b. Reagent kits that have been manufactured, labeled, packaged, and distributed in accordance with an approval issued by the U.S. Food and Drug Administration;

c. Teletherapy sources manufactured and distributed in accordance with a license issued pursuant to these rules, or the equivalent regulations of another agreement state, a licensing state, or the U.S. Nuclear Regulatory Commission.

41.2(16) *Quality control of imaging equipment.* Each licensee shall establish written quality control procedures for all equipment used to obtain images from radionuclide studies. As a minimum, the procedures shall include quality control procedures recommended by equipment manufacturers or procedures which have been approved by the agency. The licensee shall conduct quality control procedures in accordance with written procedures.

41.2(17) *Possession, use, calibration, and check of dose calibrators.*

a. A medical use licensee authorized to administer radiopharmaceuticals shall possess a dose calibrator and use it to measure the amount of activity administered to each patient or human research subject.

b. A licensee shall:

(1) Check each dose calibrator for constancy with a dedicated check source at the beginning of each day of use. To satisfy the requirement of this section, the check shall be done on frequently used settings with a sealed source of not less than 10 microcuries (370 kBq) of radium-226 or 50 microcuries (1.85 MBq) of any other photon-emitting radionuclide with a half-life greater than 90 days;

(2) Test each dose calibrator for accuracy upon installation and at 12-month intervals thereafter by assaying at least two sealed sources containing different radionuclides, the activity of which the manufacturer has determined within 5 percent of the stated activity, with minimum activity of 10 microcuries (370 kBq) for radium-226 and 50 microcuries (1.85 MBq) for any other photon-emitting radionuclide, and at least one of which has a principal photon energy between 100 keV and 500 keV;

(3) Test each dose calibrator for linearity upon installation and at 3-month intervals thereafter over the range of use between 30 microcuries (1.1 megabequerels) and the highest dosage that will be administered; and

(4) Test each dose calibrator for geometry dependence upon installation over the range of volumes and volume configurations for which it will be used. The licensee shall keep a record of this test for the duration of the use of the dose calibrator.

c. A licensee shall mathematically correct dosage readings for any geometry or linearity error that exceeds 10 percent if the dosage is greater than 10 microcuries (370 kBq) and shall repair or replace the dose calibrator if the accuracy or constancy error exceeds 10 percent.

d. A licensee shall also perform checks and tests required by 41.2(17)*"b"* following adjustment or repair of the dose calibrator.

e. A licensee shall retain a record of each check and test required by 41.2(17) for three years. The records required by 41.2(17)*"b"* shall include:

(1) For 41.2(17)*"b"*(1), the model and serial number of the dose calibrator, the identity and calibrated activity of the radionuclide contained in the check source, the date of the check, the activity measured, the instrument settings, and the initials of the individual who performed the check;

(2) For 41.2(17)*"b"*(2), the model and serial number of the dose calibrator, the model and serial number of each source used and the identity of the radionuclide contained in the source and its activity, the date of the test, the results of the test, the instrument settings, the identity of the individual performing the test, and the signature of the radiation safety officer;

(3) For 41.2(17)*"b"*(3), the model and serial number of the dose calibrator, the calculated activities, the measured activities, the date of the test, the identity of the individual performing the test, and the signature of the radiation safety officer; and

(4) For 41.2(17)*"b"*(4), the model and serial number of the dose calibrator, the configuration calibrated activity of the source measured, the activity of the source, the activity measured and the instrument setting for each volume measured, the date of the test, the identity of the individual performing the test, and the signature of the radiation safety officer.

41.2(18) *Calibration and check of survey instruments.*

a. A licensee shall ensure that the survey instruments used to show compliance with this rule have been calibrated before first use, annually, and following repair.

b. To satisfy the requirements of 41.2(18)*"a,"* the licensee shall:

(1) Calibrate all required scale readings up to 1000 millirems (10 mSv) per hour with a radiation source;

(2) For each scale that shall be calibrated, calibrate two readings separated by at least 50 percent of scale rating; and

(3) Conspicuously note on the instrument the apparent dose rate from a dedicated check source as determined at the time of calibration, and the date of calibration.

c. To satisfy the requirements of 41.2(18)*"b,"* the licensee shall consider a point as calibrated if the indicated exposure rate differs from the calculated exposure rate by not more than 20 percent and shall conspicuously attach a correction chart or graph to the instrument. A licensee may not use survey instruments if the difference between the indicated exposure rate and the calculated exposure rate is more than 20 percent.

d. A licensee shall check each survey instrument for proper operation with the dedicated check source before each use. The licensee is not required to keep records of these checks.

e. The licensee shall retain a record of each calibration required in 41.2(18)*"a"* for three years. The record shall include:

(1) A description of the calibration procedure; and

(2) A description of the source used and the certified dose rates from the source, the rates indicated by the instrument being calibrated, the correction factors deduced from the calibration data, the signature of the individual who performed the calibration, and the date of calibration.

f. To meet the requirements of 41.2(18)*"a," "b,"* and *"c,"* the licensee may obtain the services of individuals licensed by the agency, the U.S. Nuclear Regulatory Commission, an agreement state, or a licensing state to perform calibrations of survey instruments. Records of calibrations which contain information required by 41.2(18)*"e"* shall be maintained by the licensee.

g. Rescinded IAB 8/1/07, effective 9/5/07.

41.2(19) *Assay of radiopharmaceutical dosages.* A licensee shall:

a. Assay, prior to medical use, the activity of each radiopharmaceutical dosage that contains a photon-emitting radionuclide;

b. Measure, by direct measurement or by combination of measurements and calculations, the activity of each dosage of an alpha- or beta-emitting radionuclide prior to medical use, except for unit dosages obtained from a manufacturer or preparer licensed pursuant to 641—paragraph 39.4(29)*"j"* or equivalent NRC or agreement state requirements;

c. Not use a dosage if the dosage does not fall within the prescribed dosage range or if the dosage differs from the prescribed dosage by more than 20 percent unless otherwise directed by the authorized user; and

d. Retain a record of the assays required by 41.2(19)*"a"* for three years. To satisfy this requirement, the record shall contain the:

(1) Generic name, trade name, or abbreviation of the radiopharmaceutical, its lot number, and expiration dates and the radionuclide;

(2) Patient's or human research subject's name and identification number if one has been assigned;

(3) Prescribed dosage and activity of the dosage at the time of assay, or a notation that the total activity is less than 30 microcuries (1.1 megabecquerels);

(4) Date and time of the assay and administration; and

(5) Initials of the individual who performed the assay.

41.2(20) *Authorization for calibration and reference sources.* Any person authorized by 41.2(3) for medical use of radioactive material may receive, possess, and use the following radioactive material for check, calibration and reference use:

a. Sealed sources manufactured and distributed by persons specifically licensed pursuant to 641—Chapter 39 or equivalent provisions of the U.S. Nuclear Regulatory Commission, agreement state or licensing state and that do not exceed 30 millicuries (1.11 GBq) each;

b. Any radioactive material listed in 41.2(31) or 41.2(33) with a half-life of 120 days or less in individual amounts not to exceed 15 millicuries (555 MBq);

c. Any radioactive material listed in 41.2(31) or 41.2(33) with a half-life greater than 120 days in individual amounts not to exceed 200 microcuries (7.4 MBq) each; and

d. Technetium-99m amounts as needed.

41.2(21) *Requirements for possession of sealed sources and brachytherapy sources.*

a. A licensee in possession of any sealed source or brachytherapy source shall follow the radiation safety and handling instructions supplied by the manufacturer or equivalent instructions approved by the agency and shall maintain the instructions for the duration of source use in a legible form convenient to users.

b. A licensee in possession of a sealed source shall ensure that:

(1) The source is tested for leakage before its first use unless the licensee has a certificate from the supplier indicating that the source was tested within six months before transfer to the licensee; and

(2) The source is tested for leakage at intervals not to exceed six months or at intervals approved by the agency, another agreement state, a licensing state or the U.S. Nuclear Regulatory Commission.

c. To satisfy the leak test requirements of 41.2(21)*"b,"* the licensee shall ensure that:

(1) Leak tests are capable of detecting the presence of 0.005 microcurie (185 Bq) of radioactive material on the test sample or, in the case of radium, the escape of radon at the rate of 0.001 microcurie (37 Bq) per 24 hours;

(2) Test samples are taken from the source or from the surfaces of the device in which the source is mounted or stored on which radioactive contamination might be expected to accumulate; and

(3) Test samples are taken when the source is in the "off" position.

d. A licensee shall retain leak test records for five years. The records shall contain the model number, and serial number, if assigned, of each source tested, the identity of each source radionuclide and its estimated activity, the measured activity of each test sample expressed in microcuries (becquerels), a description of the method used to measure each test sample, the date of the test, the signature of the radiation safety officer and the signature of the individual performing the leak test.

e. If the leak test reveals the presence of 0.005 microcurie (185 Bq) or more of removable contamination, the licensee shall:

(1) Immediately withdraw the sealed source from use and store it in accordance with the requirements of these rules; and

(2) File a report with the agency within five days of receiving the leak test results. The report shall describe the equipment involved, the model and serial number of the leaking source, the radionuclide and its estimated activity, the test results, the date of the test, and the action taken.

f. A licensee need not perform a leak test on the following sources:

(1) Sources containing only radioactive material with a half-life of less than 30 days;

(2) Sources containing only radioactive material as a gas;

(3) Sources containing 100 microcuries (3.7 MBq) or less of beta or photon-emitting material or 10 microcuries (370 kBq) or less of alpha-emitting material; [and]

(4) Seeds of iridium-192 encased in nylon ribbon; and

(5) Sources stored and not being used. The licensee shall, however, test each such source for leakage before any use or transfer unless it has been tested for leakage within six months before the date of use or transfer.

g. A licensee in possession of a sealed source or brachytherapy source shall conduct a physical inventory of all such sources at 6-month intervals. The licensee shall retain each inventory record for five years. The inventory records shall contain the model number of each source, and serial number if one has been assigned, the identity of each source radionuclide and its estimated activity, the location of each source, date of the inventory, the signature of the radiation safety officer and the signature of the individual performing the physical inventory.

h. A licensee in possession of a sealed source or brachytherapy source shall survey with a radiation survey instrument at intervals not to exceed three months all areas where such sources are stored. This does not apply to teletherapy sources in teletherapy units or sealed sources in diagnostic devices.

i. A licensee shall retain a record of each survey required in 41.2(21)*"h"* for three years. The record shall include the date of the survey, a sketch of each area that was surveyed, the measured dose rate at several points in each area expressed in millirems (microsieverts) per hour, the model number and serial number of the survey instrument used to make the survey, and the signature of the radiation safety officer.

41.2(22) *Syringe shields.*

a. A licensee shall keep syringes that contain radioactive material to be administered in a radiation shield.

b. Unless otherwise approved by this agency, a licensee shall require each individual who prepares or administers radiopharmaceuticals to use a syringe radiation shield unless the use of the shield is contraindicated for that patient or human research subject.

41.2(23) *Syringe labels.* Unless utilized immediately, a licensee shall conspicuously label each syringe, or syringe radiation shield that contains a syringe with a radiopharmaceutical, with the radiopharmaceutical name or its abbreviation, the type of diagnostic study or therapy procedure to be performed, or the patient's or human research subject's name.

41.2(24) *Vial shields.* A licensee shall require each individual preparing or handling a vial that contains a radiopharmaceutical to keep the vial in a vial radiation shield.

41.2(25) *Vial shield labels.* A licensee shall conspicuously label each vial radiation shield that contains a vial of a radiopharmaceutical with the radiopharmaceutical name or its abbreviation.

41.2(26) *Surveys for contamination and ambient radiation dose rate.*

a. A licensee shall survey with a radiation detection survey instrument at the end of each day of use all areas where radiopharmaceuticals are routinely prepared for use or administered.

b. A licensee shall survey with a radiation detection survey instrument at least once each week all areas where radiopharmaceuticals or radioactive wastes are stored.

c. A licensee shall conduct the surveys required by 41.2(26)*"a"* and *"b"* so as to be able to measure dose rates as low as 0.1 millirem (1 μSv) per hour.

d. A licensee shall establish dose rate action levels for the surveys required by 41.2(26)*"a"* and *"b"* and shall require that the individual performing the survey immediately notify the radiation safety officer if a dose rate exceeds an action level.

e. A licensee shall survey for removable contamination each day of use all areas where radiopharmaceuticals are routinely prepared for use or administered and each week where radioactive materials are stored.

f. A licensee shall conduct the surveys required by 41.2(26)*"e"* so as to be able to detect contamination on each wipe sample of 2000 disintegrations per minute (33.3 Bq).

g. A licensee shall establish removable contamination action levels for the surveys required by 41.2(26)*"e"* and shall require that the individual performing the survey immediately notify the radiation safety officer if contamination exceeds action levels.

h. A licensee shall retain a record of each survey required by 41.2(26)*"a," "b,"* and *"e"* for two years. The record must include the date of the survey, a sketch of each area surveyed, action levels established for each area, the measured dose rate at several points in each area expressed in millirems (microsieverts) per hour or the removable contamination in each area expressed in disintegrations per minute (becquerels) per 100 square centimeters, the serial number and the model number of the

instrument used to make the survey or analyze the samples, and the initials of the individual who performed the survey.

i. A licensee does not need to perform the surveys required in this subrule in an area where the patient or human research subject is confined and cannot be released under 41.2(27).

41.2(27) *Release of patients or human research subjects containing radiopharmaceuticals or permanent implants.*

a. The licensee may authorize the release from its control of any individual who has been administered unsealed radioactive materials or permanent implants containing radioactive material if the total effective dose equivalent to any other individual from exposure to the released individual is not likely to exceed 0.5 rem (5 mSv). (NUREG-1556, Vol. 9, "Consolidated Guidance About Materials Licenses: Program-Specific Guidance About Medical Licenses," describes methods for calculating doses to other individuals and contains tables of activities not likely to cause doses exceeding 0.5 rem (5 mSv).)

b. The licensee shall provide the released individual with instructions, including written instructions, on actions recommended to maintain doses to other individuals as low as is reasonably achievable if the total effective dose equivalent to any other individual is likely to exceed 0.1 rem (1 mSv). If the dose to a breast-feeding infant or child could exceed 0.1 rem (1 mSv) assuming there were no interruption of breast feeding, the instructions shall also include:

(1) Guidance on the interruption or discontinuation of breast feeding, and

(2) Information on the consequences of failure to follow the guidance.

c. The licensee shall maintain a record of the basis for authorizing the release of an individual, for three years after the date of release, if the total effective dose equivalent is calculated by:

(1) Using the retained activity rather than the activity administered,

(2) Using an occupancy factor less than 0.25 at 1 meter,

(3) Using the biological or effective half-life, or

(4) Considering the shielding by tissue.

d. The licensee shall maintain a record for three years after the date of release that instructions were provided to a breast-feeding woman if the radiation dose to the infant or child from continued breast feeding could result in a total effective dose equivalent exceeding 0.5 rem (5 mSv). IDPH Regulatory Guide, Release of Patients Administered Radioactive Materials describes methods for calculating doses to other individuals and contains tables of activities not likely to cause doses exceeding 0.5 rem (5 mSv).

41.2(28) *Mobile nuclear medicine service technical requirements.* A licensee providing mobile nuclear medicine service shall:

a. Transport to each address of use only syringes or vials containing prepared radiopharmaceuticals or radiopharmaceuticals that are intended for reconstitution of radiopharmaceutical kits;

b. Bring into each location of use all radioactive material to be used and, before leaving, remove all unused radioactive material and associated radioactive waste;

c. Secure or keep under constant surveillance and immediate control all radioactive material when in transit or at a location of use;

d. Check survey instruments and dose calibrators as required in 41.2(17)*"b"*(1)*"d"* and *"e"* and 41.2(18)*"d"* and check all other transported equipment for proper function before medical use at each location of use;

e. Carry a calibrated survey meter in each vehicle that is being used to transport radioactive material and, before leaving a client location of use, survey all areas of radiopharmaceutical use with a radiation detection survey instrument to ensure that all radiopharmaceuticals and all associated radioactive waste have been removed; and

f. Retain a record of each survey required by 41.2(28)*"e"* for three years. The record must include the date of the survey, a plan of each area that was surveyed, the measured dose rate at several points in each area of use expressed in millirems (microsieverts) per hour, the model and serial number of the instrument used to make the survey, and the initials of the individual who performed the survey.

41.2(29) *Storage of volatiles and gases.*

a. A licensee shall store volatile radiopharmaceuticals and radioactive gases in the shippers' radiation shield and container.

b. A licensee shall store and use a multidose container in a properly functioning fume hood.

41.2(30) *Decay-in-storage.*

a. A licensee may hold radioactive material with a physical half-life of less than or equal to 120 days for decay-in-storage before disposal without regard to its radioactivity if the licensee:

(1) Holds radioactive material for decay a minimum of ten half-lives;

(2) Monitors radioactive material at the container surface before disposal as ordinary trash and determines that its radioactivity cannot be distinguished from the background radiation level with a radiation detection survey instrument set on its most sensitive scale and with no interposed shielding;

(3) Removes or obliterates all radiation labels; and

(4) Separates and monitors each generator column individually with all radiation shielding removed to ensure that its contents have decayed to background radiation level before disposal.

b. For radioactive material disposed in accordance with 41.2(30)*"a,"* the licensee shall retain a record of each disposal for three years. The record must include the date of the disposal, the date on which the radioactive material was placed in storage, the radionuclides disposed, the model and serial number of the survey instrument used, the background dose rate, the radiation dose rate measured at the surface of each waste container, and the name of the individual who performed the disposal.

41.2(31) *Use of unsealed radioactive material for uptake, dilution, or excretion studies for which a written directive is not required.* Except for quantities that require a written directive under 41.2(87), a licensee may use for uptake, dilution, or excretion studies any unsealed radioactive material prepared for medical use that:

a. Is obtained from a manufacturer or preparer licensed pursuant to 641—paragraph 39.4(29)*"j"* or equivalent NRC or agreement state requirements or from a PET radioactive drug producer licensed pursuant to 641—paragraph 39.4(24)*"h"* or equivalent NRC or agreement state requirements; or

b. Excludes production of PET radionuclides, prepared by:

(1) An authorized nuclear pharmacist;

(2) A physician who is an authorized user and who meets the requirements specified in 41.2(68) or 41.2(69) and has work experience in eluting generator systems appropriate for preparation of radioactive drugs for imaging and localization studies, measuring and testing the eluate for radionuclidic purity, and processing the eluate with reagent kits to prepare labeled radioactive drugs; or

(3) An individual under the supervision, as specified in 41.2(11), of the authorized nuclear pharmacist in 41.2(31)*"b"*(1) or the physician who is an authorized user in 41.2(31)*"b"*(2); or

c. Is obtained from and prepared by an NRC or agreement state licensee for use in research in accordance with Radioactive Drug Research Committee-approved protocol or an Investigational New Drug (IND) protocol accepted by FDA; or

d. Is prepared by the licensee for use in research in accordance with a Radioactive Drug Research Committee-approved application or an Investigational New Drug (IND) protocol accepted by FDA.

41.2(32) *Possession of survey instrument.* A licensee authorized to use radioactive material for uptake, dilution, and excretion studies shall possess a portable radiation detection survey instrument capable of detecting dose rates over the range 0.1 millirem (1.0 μSv) per hour to 50 millirems (500 μSv) per hour. The instrument shall be operable and calibrated in accordance with 41.2(18).

41.2(33) *Use of unsealed by-product material for imaging and localization studies for which a written directive is not required.* Except for quantities that require a written directive under 41.2(87), a licensee may use for imaging and localization studies any unsealed by-product material prepared for medical use that:

a. Is obtained from a manufacturer or preparer licensed pursuant to 641—paragraph 39.4(29)*"j"* or equivalent NRC or agreement state requirements or a PET radioactive drug producer licensed pursuant to 641—paragraph 39.4(24)*"h"* or equivalent NRC or agreement state requirements; or

b. Excludes production of PET radionuclides, prepared by:

(1) An authorized nuclear pharmacist;

(2) A physician who is an authorized user and who meets the requirements specified in 41.2(68) or 41.2(69);

(3) An individual under the supervision, as specified in 41.2(11), of the authorized nuclear pharmacist in 41.2(33)*"b"*(1) or the physician who is an authorized user in 41.2(33)*"b"*(2); or

c. Is obtained from and prepared by an NRC or agreement state licensee for use in research in accordance with Radioactive Drug Research Committee-approved protocol or an Investigational New Drug (IND) protocol accepted by FDA; or

d. Is prepared by the licensee for use in research in accordance with a Radioactive Drug Research Committee-approved application or an Investigational New Drug (IND) protocol accepted by FDA.

41.2(34) *Permissible molybdenum-99, strontium-82, and strontium-85 concentrations.*

a. A licensee shall not administer to humans a radiopharmaceutical that contains:

(1) More than 0.15 microcurie of molybdenum-99 per millicurie of technetium-99m (0.15 kilobecquerel of molybdenum-99 per megabecquerel of technetium-99m); or

(2) More than 0.02 microcurie of strontium-82 per millicurie of rubidium-82 chloride injection (0.02 kilobecquerel strontium-82 per megabecquerel rubidium-82 chloride); or more than 0.2 microcurie of strontium-85 per millicurie of rubidium-82 chloride injection (0.2 kilobecquerel strontium-85 per megabecquerel rubidium-82 chloride).

b. A licensee preparing:

(1) Technetium-99m radiopharmaceuticals from molybdenum-99/technetium-99m generators shall measure the molybdenum-99 concentration in each eluate or extract; or

(2) Rubidium-82 radiopharmaceuticals from strontium-82/rubidium-82 generators shall measure the strontium-82 and strontium-85 concentration before the first patient use of the day.

c. A licensee who must measure molybdenum-99, strontium-82, or strontium-85 concentration shall retain a record of each measurement for three years. The record shall include:

(1) For each elution or extraction of technetium-99m, the ratio of the measures expressed as microcuries of molybdenum per millicurie of technetium (kilobecquerels of molybdenum per megabecquerel of technetium), the date of the test, and the initials of the individual who performed the test.

(2) For each elution or extraction of rubidium-82, the ratio of the measures expressed as microcuries of strontium-82 per millicurie of rubidium-82 (kilobecquerels of strontium-82 per megabecquerel of rubidium-82), microcuries of strontium-85 per millicurie of rubidium-82 (kilobecquerels of strontium-85 per millicurie of rubidium-82), the date of the test, and the initials of the individual who performed the test.

d. A licensee shall report immediately to the agency each occurrence of molybdenum-99 concentration exceeding the limits specified in 41.2(34)*"a"*(1) and strontium-82 or strontium-85 concentration exceeding the limits specified in 41.2(34)*"a"*(2).

41.2(35) *Control of aerosols and gases.*

a. A licensee who administers radioactive aerosols or gases shall do so with a system that will keep airborne concentrations within the limits prescribed by 641—40.15(136C) and 641—40.26(136C) of these rules.

b. The system shall either be directly vented to the atmosphere through an air exhaust or provide for collection and decay or disposal of the aerosol or gas in a shielded container.

c. A licensee shall only administer radioactive gases in rooms that are at negative pressure compared to surrounding rooms.

d. Before receiving, using, or storing a radioactive gas, the licensee shall calculate the amount of time needed after a release to reduce the concentration in the area of use to the occupational limit listed in Appendix B of 641—Chapter 40. The calculation shall be based on the highest activity of gas handled in a single container and the measured available air exhaust rate.

e. A licensee shall post the time calculated in 41.2(35)*"a"* at the area of use and require that, in case of a gas spill, individuals evacuate the room until the posted time has elapsed.

f. A licensee shall check the operation of collection systems monthly and measure the ventilation rates in areas of use at intervals not to exceed six months. Records of these checks and measurements shall be maintained for three years.

g. A copy of the calculations required in 41.2(35)*"d"* shall be recorded and retained for the duration of the license.

41.2(36) *Possession of survey instruments.* A licensee authorized to use radioactive material for imaging and localization studies shall possess a portable radiation detection survey instrument capable of detecting dose rates over the range of 0.1 millirem (1 μSv) per hour to 50 millirems (500 μSv) per hour, and a portable radiation measurement survey instrument capable of measuring dose rates over the range of 1 millirem (10 μSv) per hour to 1000 millirems (10 mSv) per hour. The instruments shall be operable and calibrated in accordance with 41.2(18).

41.2(37) *Use of unsealed by-product material for which a written directive is required.* A licensee may use any unsealed by-product material prepared for medical use and for which a written directive is required that:

a. Is obtained from:

(1) A manufacturer or preparer licensed under 641—paragraph 39.4(29)*"j"* or equivalent NRC or agreement state requirements; or

(2) A PET radioactive drug producer licensed under 641—paragraph 39.4(24)*"h"* or equivalent NRC or agreement state requirements; or

b. Excludes production of PET radionuclides, prepared by:

(1) An authorized nuclear pharmacist;

(2) A physician who is an authorized user and who meets the requirements of 41.2(68) or 41.2(69); or

(3) An individual under the supervision, as specified in 41.2(11), of the authorized nuclear pharmacist in 41.2(37)*"b"*(1) or the physician who is an authorized user in 41.2(37)*"b"*(2); or

c. Is obtained from and prepared by an NRC or agreement state licensee for use in research in accordance with the Investigational New Drug (IND) protocol accepted by FDA; or

d. Is prepared by the licensee for use in research in accordance with an Investigational New Drug (IND) protocol accepted by FDA.

41.2(38) *Safety instruction.*

a. A licensee shall provide oral and written radiation safety instruction for all personnel caring for patients or human research subjects undergoing radiopharmaceutical therapy and hospitalized for compliance with 41.2(27). Refresher training shall be provided initially and at 12-month intervals or as required for patient care.

b. To satisfy 41.2(38)*"a,"* the instruction shall describe the licensee's procedures for:

(1) Patient or human research subject control;

(2) Visitor control;

(3) Contamination control;

(4) Waste control;

(5) Notification of the radiation safety officer, radiation safety officer designee, or authorized user in case of the patient's or human research subject's death or medical emergency; and

(6) Training requirements specified in 641—40.110(136C) and 40.116(136C) and adopted by reference and included herein.

c. A licensee shall keep a record of individuals receiving instruction required by 41.2(38)*"a,"* a description of the instruction, the date of instruction, and the name of the individual who gave the instruction. Such record shall be maintained for inspection by the agency for three years.

41.2(39) *Safety precautions.*

a. For each patient or human research subject receiving radiopharmaceutical therapy and hospitalized for compliance with 41.2(27), a licensee shall:

(1) Provide a private room with a private sanitary facility or a room, with a private sanitary facility, with another individual who also has received therapy with unsealed radioactive material and who also cannot be released under 41.2(27);

(2) Post the patient's or human research subject's door with a "Caution: Radioactive Material" sign and note on the door or on the patient's or human research subject's chart where and how long visitors may stay in the patient's or human research subject's room;

(3) Authorize visits by individuals under 18 years of age only on a case-by-case basis with the approval of the authorized user after consultation with the radiation safety officer;

(4) Promptly after administration of the dosage, measure the dose rates in contiguous restricted and unrestricted areas with a radiation measurement survey instrument to demonstrate compliance with the requirements of 641—subrule 40.26(1) which is adopted by reference and included herein and retain for three years a record of each survey that includes the time and date of the survey, a plan of the area or list of points surveyed, the measured dose rate at several points expressed in millirems (μSv) per hour, the instrument used to make the survey, and the initials of the individual who made the survey;

(5) Either monitor material and items removed from the patient's or human research subject's room to determine that any contamination cannot be distinguished from the natural background radiation level with a radiation detection survey instrument set on its most sensitive scale and with no interposed shielding, or handle these materials and items as radioactive waste;

(6) Provide the patient or human research subject with radiation safety guidance that will help to keep radiation dose to household members and the public as low as reasonably achievable before authorizing release of the patient or human research subject;

(7) Survey the patient's or human research subject's room and private sanitary facility for removable contamination with a radiation detection survey instrument before assigning another patient or human research subject to the room. The room must not be reassigned until removable contamination is less than 200 disintegrations per minute (3.33 Bq) per 100 square centimeters; and

b. A licensee shall notify the radiation safety officer or the authorized user immediately if the patient or human research subject dies or has a medical emergency.

41.2(40) *Possession of survey instruments.* A licensee authorized to use radioactive material for radiopharmaceutical therapy shall possess a portable radiation detection survey instrument capable of detecting dose rates over the range of 0.1 millirem (1 μSv) per hour to 50 millirems (500 μSv) per hour, and a portable radiation measurement survey instrument capable of measuring dose rates over the range of 1 millirem (10 μSv) per hour to 1000 millirems (10 mSv) per hour. The instruments shall be operable and calibrated in accordance with 41.2(18).

41.2(41) *Use of sealed sources for diagnosis.* A licensee shall use only sealed sources for diagnostic medical uses as approved in the Sealed Source and Device Registry.

41.2(42) *Availability of survey instrument.* A licensee authorized to use radioactive material as a sealed source for diagnostic purposes shall have available for use a portable radiation detection survey instrument capable of detecting dose rates over the range of 0.1 millirem (1 μSv) per hour to 50 millirems (500 μSv) per hour or a portable radiation measurement survey instrument capable of measuring dose rates over the range of 1 millirem (10 μSv) per hour to 1000 millirems (10 mSv) per hour. The instrument shall be operable and calibrated in accordance with 41.2(18).

41.2(43) *Use of sources for brachytherapy.* A licensee shall use only brachytherapy sources for therapeutic medical uses:

a. As approved in the Sealed Source and Device Registry; or

b. In research in accordance with an active Investigational Device Exemption (IDE) application accepted by the FDA provided the requirements of 41.2(15) are met.

41.2(44) *Safety instruction.*

a. The licensee shall provide oral and written radiation safety instruction to all personnel caring for a patient or human research subject receiving implant therapy. Refresher training shall be provided initially and at 12-month intervals or as required for patient care.

b. To satisfy 41.2(44)*"a,"* the instruction shall describe:

(1) Size and appearance of the brachytherapy sources;

(2) Safe handling and shielding instructions in case of a dislodged source;

(3) Procedures for patient or human research subject control;

(4) Procedures for visitor control, to include routine visitation of hospitalized individuals in accordance with 641—40.26(136C) and visitation authorized in accordance with 641—40.26(136C);

(5) Procedures for notification of the radiation safety officer, radiation safety officer designee, or authorized user if the patient or human research subject dies or has a medical emergency; and

(6) Training requirements specified in 641—40.110(136C) and 40.116(136C) as adopted by reference and included herein.

c. A licensee shall maintain a record of individuals receiving instruction required by 41.2(44)*"a,"* a description of the instruction, the date of instruction, and the name of the individual who gave the instruction for three years.

41.2(45) *Safety precautions.*

a. For each patient or human research subject receiving implant therapy a licensee shall:

(1) Not place the patient or human research subject in the same room with a patient who is not receiving radiation therapy unless the licensee can demonstrate compliance with the requirement of 641—40.26(136C) as adopted by reference and included herein at a distance of 1 meter from the implant;

(2) Post the patient's or human research subject's door with a "Caution: Radioactive Materials" sign and note on the door or the patient's or human research subject's chart where and how long visitors may stay in the patient's or human research subject's room;

(3) Authorize visits by individuals under 18 years of age only on a case-by-case basis with the approval of the authorized user after consultation with the radiation safety officer;

(4) Promptly after implanting the sources, survey the dose rates in contiguous restricted and unrestricted areas with a radiation measurement survey instrument to demonstrate compliance with 641—40.26(136C) as adopted by reference and included herein; and retain for three years a record of each survey that includes the time and date of the survey, a sketch of the area or list of points surveyed, the measured dose rate at several points expressed in millirems (mSv) per hour, the instrument used to make the survey, and the initials of the individual who made the survey;

(5) Provide the patient or human research subject with radiation safety guidance that will help keep the radiation dose to household members and the public as low as reasonably achievable before releasing the patient or human research subject if the patient or human research subject was administered a permanent implant; and

(6) Have applicable emergency response equipment available near each treatment room to respond to a source dislodged from the patient or lodged within the patient following removal of the source applicators.

b. A licensee shall notify the radiation safety officer, radiation safety officer designee, or authorized user immediately if the patient or human research subject dies or has a medical emergency.

41.2(46) *Brachytherapy sources inventory.*

a. Each time brachytherapy sources are returned to an area of storage from an area of use, the licensee shall immediately count or otherwise verify the number returned to ensure that all sources taken from the storage area have been returned.

b. A licensee shall make a record of brachytherapy source utilization which includes:

(1) The names of the individuals permitted to handle the sources;

(2) The number and activity of sources removed from storage, the room number of use and patient's or human research subject's name, the time and date they were removed from storage, the number and activity of sources in storage after the removal, and the initials of the individual who removed the sources from storage; and

(3) The number and activity of sources returned to storage, the room number of use and patient's or human research subject's name, the time and date they were returned to storage, the number and activity of sources in storage after the return, and the initials of the individual who returned the sources to storage.

c. Immediately after implanting sources in a patient or human research subject and immediately after removal of sources from a patient or human research subject, the licensee shall make a radiation survey of the patient or human research subject and the area of use to confirm that no sources have been misplaced. The licensee shall make a record of each survey.

d. A licensee shall maintain the records required in 41.2(46)*"b"* and *"c"* for three years.

e. A licensee shall maintain accountability at all times for all brachytherapy sources in storage or use. As soon as possible after removing sources from a patient or a human research subject, a licensee shall return brachytherapy sources to a secure storage area.

41.2(47) *Release of patients or human research subjects treated with temporary implants.*

a. Immediately after removing the last temporary implant source from a patient or human research subject, the licensee shall perform a radiation survey of the patient or human research subject with a radiation detection survey instrument to confirm that all sources have been removed and, for remote afterloaders, returned to the safe shielded position. The licensee shall not release from confinement for medical care a patient or human research subject treated by temporary implant until all sources have been removed.

b. A licensee shall maintain a record of patient or human research subject surveys which demonstrate compliance with 41.2(47)*"a"* for three years. Each record shall include the date of the survey, the name of the patient or human research subject, the dose rate from the patient or human research subject expressed as millirems (microsieverts) per hour and measured within 1 meter from the patient or human research subject, and the initials of the individual who made the survey.

41.2(48) *Possession of survey instruments.* A licensee authorized to use radioactive material for implant therapy shall possess a portable radiation detection survey instrument capable of detecting dose rates over the range of 0.1 millirem (1 μSv) per hour to 50 millirems (500 μSv) per hour, and a portable radiation measurement survey instrument capable of measuring dose rates over the range of 1 millirem (10 μSv) per hour to 1000 millirems (10 mSv) per hour. The instruments shall be operable and calibrated in accordance with 41.2(18).

41.2(49) *Use of a sealed source in a remote afterloader unit, teletherapy unit, or gamma stereotactic radiosurgery unit.* A licensee shall use sealed sources in photon emitting remote afterloader units, teletherapy units, or gamma stereotactic radiosurgery units for therapeutic medical uses as approved in the Sealed Source and Device Registry or in research in accordance with an active Investigational Device Exemption (IDE) application accepted by the FDA provided the requirements of 41.2(15) are met.

41.2(50) *Installation, maintenance, adjustment, and repair.*

a. Only a person specifically licensed by the NRC or an agreement state shall install, maintain, adjust, or repair a remote afterloader unit, teletherapy unit, or gamma stereotactic radiosurgery unit that involves work on the source shielding, the source(s) driving unit, or other electronic or mechanical component that could expose the source(s), or reduce the shielding around the source(s), or compromise the radiation safety of the unit or the source(s).

b. Except for low-dose-rate remote afterloader units, only a person specifically licensed by the NRC or an agreement state shall install, replace, relocate, or remove a sealed source or source contained in other remote afterloader units, teletherapy units, or gamma stereotactic radiosurgery units.

c. For low-dose-rate remote afterloader units, only a person specifically licensed by the NRC or an agreement state or an authorized medical physicist shall install, replace, relocate, or remove a sealed source(s) contained in the unit.

d. A licensee shall retain a record of the installation, maintenance, adjustment, and repair of remote afterloader units, teletherapy units and gamma stereotactic radiosurgery units for three years. The record must include the date, description of the service, and the name of the individual who performed the work.

41.2(51) *Amendments.* In addition to the requirements specified in 41.2(4), a licensee shall apply for and receive a license amendment before:

a. Making any change in the treatment room shielding;

b. Making any change in the location of the teletherapy unit within the treatment room;

c. Using the teletherapy unit in a manner that could result in increased radiation levels in areas outside the teletherapy treatment room;

d. Relocating the teletherapy unit; or

e. Allowing an individual not listed on the licensee's license to perform the duties of the teletherapy physicist.

41.2(52) *Safety procedures and instructions for remote afterloader units, teletherapy units, and gamma sterotactic radiosurgery units.*

a. A licensee shall:

(1) Secure the unit, the console, the console keys, and the treatment room when not in use or unattended;

(2) Permit only individuals approved by the authorized user, radiation safety officer, or authorized medical physicist to be present in the treatment room during treatment with the source;

(3) Prevent dual operation of more than one radiation producing device in a treatment room, if applicable; and

(4) Develop, implement, and maintain written procedures for responding to an abnormal situation when the operator is unable to place the source in the shielded position, or to remove the patient or human research subject from the radiation field with controls from outside the treatment room. These procedures must include:

1. Instructions for responding to equipment failures and the names of the individuals responsible for implementing corrective actions;

2. The process for restricting access to and posting of the treatment area to minimize the risk of inadvertent exposure; and

3. The names and telephone numbers of the authorized users, the authorized medical physicist, and the radiation safety officer to be contacted if the unit or console operates abnormally.

b. A copy of the procedures required by 41.2(52)*"a"*(4) must be physically located at the unit console.

c. A licensee shall post instructions at the unit console to inform the operator of:

(1) The location of the procedures required by 41.2(52)*"a"*(4); and

(2) The names and telephone numbers of the authorized users, the authorized medical physicist, and the radiation safety officer to be contacted if the unit or console operates abnormally.

d. A licensee shall provide instruction, initially and at least annually, to all individuals who operate the unit, appropriate to the individual's assigned duties, in:

(1) The procedures identified in 41.2(52)*"a"*(4); and

(2) The operating procedures for the unit.

e. The licensee shall ensure that operators, authorized medical physicists, and authorized users participate in drills of emergency procedures, initially and at least annually.

f. A licensee shall retain a record for three years of individuals receiving instruction required by 41.2(52)*"d,"* a description of the instruction, the date of instruction, and the name of the individual who gave the instruction. A copy of the procedures required in 41.2(52)*"a"*(4) and 41.2(52)*"d"*(2) shall be retained for three years.

41.2(53) *Safety precautions for remote afterloader units, teletherapy units, and gamma sterotactic radiosurgery units.*

a. A licensee shall control access to the teletherapy room by a door at each entrance.

b. A licensee shall equip each entrance to the teletherapy room with an electrical interlock system that shall:

(1) Prevent the operator from turning the primary beam of radiation "on" unless each treatment room entrance door is closed;

(2) Turn the beam of radiation "off" immediately when an entrance door is opened; and

(3) Prevent the primary beam of radiation from being turned "on" following an interlock interruption until all treatment room entrance doors are closed and the beam "on-off" control is reset at the console.

c. A licensee shall require any individual entering the treatment room to ensure, through the use of appropriate monitors, that radiation levels have returned to ambient levels.

d. Except for low-dose-rate remote afterloader units, a licensee shall construct or equip each treatment room with viewing and intercom systems to permit continuous observation of the patient or human research subject from the treatment console during irradiation.

e. For licensed activities where sources are placed within the patient's or human research subject's body, the licensee shall only conduct treatments which allow for expeditious removal of a decoupled or jammed source.

f. In addition to the requirements specified in 41.2(53)*"a"* through *"e,"* a licensee shall:

(1) For medium-dose-rate and pulsed-dose-rate remote afterloader units, require:

1. An authorized medical physicist and either an authorized user or a physician, under the supervision of an authorized user, who have been trained in the operation of and emergency response for the unit to be physically present during the initiation of all patient treatments involving the unit; and

2. An authorized medical physicist and either an authorized user or an individual, under the supervision of an authorized user, who have been trained to remove the source applicator in the event of an emergency involving the unit to be immediately available during continuation of all patient treatments involving the unit.

(2) For high-dose-rate remote afterloader units, require:

1. An authorized user and an authorized medical physicist to be physically present during the initiation of all patient treatments involving the unit; and

2. An authorized medical physicist and either an authorized user or a physician, under the supervision of an authorized user, who have been trained in the operation and emergency response for the unit, to be physically present during the continuation of all patient treatments involving the unit.

(3) For gamma stereotactic radiosurgery units, require an authorized user and an authorized medical physicist to be physically present throughout all patient treatments involving the unit. As used in this subparagraph, "physically present" means to be within hearing distance of normal voice.

(4) Notify the radiation safety officer, or the radiation safety officer designee, and an authorized user as soon as possible if the patient or human research subject has a medical emergency or dies.

g. A licensee shall have applicable emergency response equipment available near each treatment room to respond to a source remaining in the unshielded position or lodged within the patient following completion of the treatment.

41.2(54) *Possession of survey instrument.* A licensee authorized to use radioactive material in a teletherapy unit shall possess either a portable radiation detection survey instrument capable of detecting dose rates over the range of 0.1 millirem (1 μSv) per hour to 50 millirems (500 μSv) per hour or a portable radiation measurement survey instrument capable of measuring dose rates over the range of 1 millirem (10 μSv) per hour to 1000 millirems (10 mSv) per hour. The instruments shall be operable and calibrated in accordance with 41.2(18).

41.2(55) *Radiation monitoring device.*

a. A licensee shall have in each teletherapy room a permanent radiation monitor capable of continuously monitoring beam status.

b. Each radiation monitor shall be capable of providing visible notice of a teletherapy unit malfunction that results in an exposed or partially exposed source. The visible indicator of high radiation levels shall be observable by an individual entering the teletherapy room.

c. Each radiation monitor shall be equipped with a backup power supply separate from the power supply to the teletherapy unit. This backup power supply may be a battery system.

d. A radiation monitor shall be checked with a dedicated check source for proper operation each day before the teletherapy unit is used for treatment of patients or human research subjects.

e. A licensee shall maintain a record of the check required by 41.2(55)*"d"* for three years. The record shall include the date of the check, notation that the monitor indicates when the source is exposed, and the initials of the individual who performed the check.

f. If a radiation monitor is inoperable, the licensee shall require any individual entering the teletherapy room to use a survey instrument or audible alarm personal dosimeter to monitor for any malfunction of the source exposure mechanism. The instrument or dosimeter shall be checked with a dedicated check source for proper operation at the beginning of each day of use. The licensee shall keep a record as described in 41.2(55)*"e."*

g. A licensee shall promptly repair or replace the radiation monitor if it is inoperable.

41.2(56) *Viewing system.* A licensee shall construct or equip each teletherapy room to permit continuous observation of the patient or human research subject from the teletherapy unit console during irradiation.

41.2(57) *Dosimetry equipment.*

a. Except for low-dose-rate remote afterloader sources where the source output or activity is determined by the manufacturer, a licensee shall have a calibrated dosimetry system available for use. To satisfy this requirement, one of the following two conditions shall be met:

(1) The system must have been calibrated using a system or source traceable to the National Institute of Standards and Technology and published protocols accepted by nationally recognized bodies, or by a calibration laboratory accredited by the American Association of Physicists in Medicine. The calibration must have been performed within the previous two years and after any servicing that may have affected system calibration; or

(2) The system must have been calibrated within the previous four years; 18 to 30 months after that calibration, the system must have been intercompared with another dosimetry system that was calibrated within the past 24 months by the National Institute of Standards and Technology or by a calibration laboratory accredited by the American Association of Physicists in Medicine. The results of the intercomparison must indicate that the calibration factor of the licensee's system has not changed by more than 2 percent. The licensee may not use the intercomparison result to change the calibration factor. When intercomparing dosimetry systems to be used for calibrating sealed sources for therapeutic units, the licensee shall use a comparable unit with beam attenuators or collimators, if applicable, and sources of the same radionuclide as the source used at the licensee's facility.

b. The licensee shall have available for use a dosimetry system for spot-check measurements. To meet this requirement, the system may be compared with a system that has been calibrated in accordance with 41.2(57)*"a."* This comparison must have been performed within the previous year and after each servicing that may have affected system calibration. The spot-check system may be the same system used to meet the requirement in 41.2(57)*"a."*

c. The licensee shall maintain a record of each calibration, intercomparison, and comparison for the duration of the license. For each calibration, intercomparison, or comparison, the record shall include the date, the model numbers and serial numbers of the instruments that were calibrated, intercompared, or compared as required by 41.2(57)*"a"* and *"b,"* the correction factors that were determined, the names of the individuals who performed the calibration, intercomparison, or comparison, and evidence that the intercomparison meeting was sanctioned by a calibration laboratory or radiologic physics center accredited by the American Association of Physicists in Medicine.

41.2(58) *Full calibration measurements on teletherapy units, remote afterloader units, and gamma stereotactic radiosurgery units.*

a. Teletherapy units.

(1) A licensee authorized to use a teletherapy unit for medical use shall perform full calibration measurements for each teletherapy unit:

1. Before the first medical use of the unit; and
2. Before medical use under the following conditions:

- Whenever spot-check measurements indicate that the output differs by more than 5 percent from the output of the last full calibration corrected mathematically for radioactive decay;
- Following replacement of the source or following reinstallation of the teletherapy unit in a new location;
- Following any repair of the teletherapy unit that includes removal of the source or major repair of the components associated with the source exposure assembly; and

3. At intervals not exceeding one year.

(2) To satisfy the requirements of 41.2(58)*"a"*(1), full calibration measurements must include determination of:

1. The output within ±3 percent for the range of field sizes and for the distance or range of distances used for medical use;
2. The coincidence of the radiation field and the field indicated by the light beam localizing device;

3. The uniformity of the radiation field and its dependence on the orientation of the useful beam;
4. Timer accuracy and linearity over the range of use;
5. On-off error; and
6. The accuracy of all distance measuring and localization devices in medical use.

(3) A licensee shall use the dosimetry system described in 41.2(57) to measure the output for one set of exposure conditions. The remaining radiation measurements required in 41.2(58)*"a"*(2)"1" may be made using the dosimetry system that indicates relative dose rates.

(4) A licensee shall make full calibration measurements required by 41.2(58)*"a"* in accordance with published protocols accepted by nationally recognized bodies.

(5) A licensee shall mathematically correct the outputs determined in 41.2(58)*"a"*(2)"1" for physical decay for intervals not exceeding one month for cobalt-60, six months for cesium-137, or at intervals consistent with 1 percent of all other radionuclides.

(6) Full calibration measurements required by 41.2(58)*"a"*(1) and physical decay corrections required in 41.2(58)*"a"*(5) must be performed by the authorized medical physicist.

(7) A licensee shall maintain a record of each calibration for the duration of the license. The record shall include the date of the calibration; the manufacturer's name, model number, and serial number for both the unit and the source; tables that describe the output of the unit over the range of field sizes and for the range of distances used in radiation therapy; a determination of the coincidence of the radiation field and the field indicated by the light beam localizing device; the measured timer accuracy for a typical treatment time; the calculated "on-off" error; the estimated accuracy of each distance measuring or localization device; and the signature of the authorized medical physicist.

b. Remote afterloader units.

(1) A licensee authorized to use a remote afterloader unit for medical use shall perform full calibration measurements for each unit:

1. Before the first medical use of the unit; and
2. Before medical use under the following conditions:

- Following replacement of the source or following reinstallation of the unit in a new location outside the facility; and
- Following any repair of the unit that includes removal of the source or major repair of the components associated with the source exposure assembly; and

3. At intervals not exceeding one quarter of a year for high-dose-rate, medium-dose-rate, and pulsed-dose-rate remote afterloader units with sources whose half-life exceeds 75 days; and
4. At intervals not exceeding one year for low-dose-rate remote afterloader units.

(2) To satisfy the requirements of 41.2(58)*"b"*(1), full calibration measurements must include, as applicable, determination of:

1. The output within ±5 percent;
2. Source positioning accuracy to within ±1 millimeter;
3. Source retraction with backup battery upon power failure;
4. Length of the source transfer tubes;
5. Timer accuracy and linearity over the typical range of use;
6. Length of the applicators; and
7. Function of the source transfer tubes, applicators, and transfer tube-applicator interfaces.

(3) A licensee shall use the dosimetry system described in 41.2(57) to measure the output.

(4) A licensee shall make full calibration measurements required by 41.2(58)*"b"*(1) in accordance with published protocols accepted by nationally recognized bodies.

(5) In addition to the requirements for full calibrations for low-dose-rate remote afterloader units in 41.2(58)*"b"*(2), a licensee shall perform an autoradiograph of the source to verify inventory and source arrangement at intervals not exceeding one quarter of a year.

(6) For low-dose-rate remote afterloader units, a licensee may use measurements provided by the source manufacturer that are made in accordance with 41.2(58)*"b."*

(7) A licensee shall mathematically correct the outputs determined in 41.2(58)*"b"*(2)"1" for physical decay intervals consistent with 1 percent physical decay.

(8) Full calibration measurements required by 41.2(58)*"b"*(1) and physical decay corrections required by 41.2(58)*"b"*(7) must be performed by the authorized medical physicist.

(9) A licensee shall retain a record of each calibration in accordance with 41.2(58)*"a"*(7).

c. Gamma stereotactic radiosurgery units.

(1) A licensee authorized to use a gamma stereotactic radiosurgery unit for medical use shall perform full calibration measurements on each unit:

1. Before the first medical use of the unit;
2. Before medical use under the following conditions:

- Whenever spot-check measurements indicate that the output differs by more than 5 percent from the output obtained at the last full calibration corrected mathematically for radioactive decay;
- Following replacement of the sources or following reinstallation of the gamma stereotactic radiosurgery unit in a new location; and
- Following any repair of the gamma stereotactic radiosurgery unit that includes removal of the sources or major repair of the components associated with the source assembly; and

3. At intervals not exceeding one year, with the exception that relative helmet factors need only be determined before the first medical use of a helmet and following any damage to a helmet.

(2) To satisfy the requirement of 41.2(58)*"c"*(1), full calibration measurements must include determination of:

1. The output within ±3 percent;
2. Relative helmet factors;
3. Isocenter coincidence;
4. Timer accuracy and linearity over the range of use;
5. On-off error;
6. Trunnion centricity;
7. Treatment table retraction mechanism, using backup battery power or hydraulic backups with the unit off;
8. Helmet microswitches;
9. Emergency timing circuits; and
10. Stereotactic frames and localizing devices (trunnions).

(3) A licensee shall use the dosimetry system described in 41.2(57) to measure the output for one set of exposure conditions. The remaining radiation measurements required in 41.2(58)*"c"*(2)"1" may be made using a dosimetry system that indicates relative dose rates.

(4) A licensee shall make full calibration measurements required by 41.2(58)*"c"*(1) in accordance with published protocols accepted by nationally recognized bodies.

(5) A licensee shall mathematically correct the outputs determined in 41.2(58)*"c"*(2)"1" at intervals not exceeding one month for cobalt-60 and at intervals consistent with 1 percent physical decay for all other radionuclides.

(6) Full calibration measurements required by 41.2(58)*"c"*(1) and physical decay corrections required in 41.2(58)*"c"*(5) must be performed by the authorized medical physicist.

(7) A licensee shall retain a record of each calibration in accordance with 41.2(58)*"a"*(7).

41.2(59) *Periodic spot checks for teletherapy units, remote afterloader units, and gamma stereotactic radiosurgery units.*

a. Teletherapy units.

(1) A licensee authorized to use teletherapy units for medical use shall perform output spot checks on each teletherapy unit once in each calendar month that include determination of:

1. Timer accuracy and timer linearity over the range of use;
2. On-off error;
3. The coincidence of the radiation field and the field indicated by the light beam localizing device;
4. The accuracy of all distance measuring and localization devices used for medical use;
5. The output for one typical set of operating conditions measured with the dosimetry system described in 41.2(57); and

6. The difference between the measurement made in 41.2(59)*"a"*(1)"5" and the anticipated output expressed as a percentage of the anticipated output (i.e., the value obtained at last full calibration corrected mathematically for physical decay).

(2) A licensee shall perform measurements required by 41.2(59)*"a"*(1) in accordance with written procedures established by the authorized medical physicist. That individual need not actually perform the spot-check measurements.

(3) A licensee shall have the authorized medical physicist review the results of each spot check within 15 days. The authorized medical physicist shall notify the licensee as soon as possible in writing of the result of each spot check.

(4) A licensee authorized to use a teletherapy unit for medical use shall perform safety spot checks of each teletherapy facility once in each calendar month and after each source installation to ensure proper operation of:

1. Electrical interlocks at each teletherapy room entrance;

2. Electrical or mechanical stops installed for the purpose of limiting use of the primary beam of radiation (restriction of source housing angulation or elevation, carriage or stand travel and operation of the beam on-off mechanism);

3. Source exposure indicator lights on the teletherapy unit, on the control console, and in the facility;

4. Viewing and intercom systems;

5. Treatment room doors from inside and outside the treatment room; and

6. Electrically assisted treatment room doors with the teletherapy unit electrical power turned off.

(5) If the results of the spot checks required in 41.2(59)*"a"*(4) indicate the malfunction of any system, the licensee shall lock the control console in the off position and not use the unit except as may be necessary to repair, replace, or check the malfunctioning system.

(6) A licensee shall retain for three years a record of each spot check required in 41.2(59)*"a."* The record must include:

1. The date of the spot check;

2. The manufacturer's name, model number, and serial number of the teletherapy unit, source and instrument used to measure the output of the teletherapy unit;

3. An assessment of timer linearity and constancy;

4. The calculated on-off error;

5. A determination of the coincidence of the radiation field and the field indicated by the light beam localizing device;

6. The determined accuracy of each distance measuring and localization device;

7. The difference between the anticipated output and the measured output;

8. Notations indicating the operability of each entrance door electrical interlock, each electrical or mechanical source exposure indicator light, and the viewing and intercom system and doors; and

9. The name of the individual who performed the periodic spot check and the signature of the authorized medical physicist who reviewed the record of the spot check.

(7) A licensee shall retain a copy of the procedures required by 41.2(59)*"a"*(2) until the licensee no longer possesses the teletherapy unit.

b. Remote afterloader units.

(1) A licensee authorized to use a remote afterloader unit for medical use shall perform spot checks of each remote afterloader facility and on each unit:

1. Before the first use of a high-dose-rate, medium-dose-rate, or pulsed-dose-rate remote afterloader unit on a given day;

2. Before each patient treatment with a low-dose-rate remote afterloader unit; and

3. After each source installation.

(2) A licensee shall perform the measurements required by 41.2(59)*"b"*(1) in accordance with written procedures established by the authorized medical physicist. That individual need not actually perform the spot-check measurements.

(3) A licensee shall have the authorized medical physicist review the results of each spot check within 15 days. The authorized medical physicist shall notify the licensee as soon as possible in writing of the results of each spot check.

(4) To satisfy the requirements of 41.2(59)*"b"*(1), spot checks must, at a minimum, ensure proper operation of:

1. Electrical interlocks at each remote afterloader unit room entrance;
2. Source exposure indicator lights on the remote afterloader unit, on the control console, and in the facility;
3. Viewing and intercom systems in each high-dose-rate, medium-dose-rate, and pulsed-dose-rate remote afterloader facility;
4. Emergency response equipment;
5. Radiation monitors used to indicate the source position;
6. Timer accuracy;
7. Clock (date and time) in the unit's computer; and
8. Decayed source(s) activity in the unit's computer.

(5) If the results of the spot checks required in 41.2(59)*"b"*(4) indicate the malfunction of any system, the licensee shall lock the control console in the off position and not use the unit except as may be necessary to repair, replace, or spot check the malfunctioning system.

(6) A licensee shall retain for three years a record of each spot check required in 41.2(59)*"b"*(4). The record must include:

1. The date of the spot check;
2. The manufacturer's name, model number, and serial number for the remote afterloader unit and source;
3. An assessment of timer accuracy;
4. Notations indicating the operability of each entrance door electrical interlock, radiation monitors, source exposure indicator lights, viewing and intercom systems, and clock and decayed source activity in the unit's computer; and
5. The name of the individual who performed the periodic spot check and the signature of the authorized medical physicist who reviewed the record of the spot check.

(7) A licensee shall retain a copy of the procedures required in 41.2(59)*"b"*(2) until the licensee no longer possesses the remote afterloader unit.

c. Gamma stereotactic radiosurgery units.

(1) A licensee authorized to use a gamma stereotactic radiosurgery unit for medical use shall perform spot checks for the gamma stereotactic radiosurgery facility and on each unit:

1. Monthly;
2. Before the first use of the unit on a given day; and
3. After each source installation.

(2) A licensee shall:

1. Perform the measurements required by 41.2(59)*"c"*(1) in accordance with written procedures established by the authorized medical physicist. That individual need not actually perform the spot-check measurements.
2. Have the authorized medical physicist review the results of each spot check within 15 days. The authorized medical physicist shall notify the licensee as soon as possible in writing of the results of each spot check.

(3) To satisfy the requirements of 41.2(59)*"c"*(1)"1," spot checks must, at a minimum:

1. Ensure proper operation of treatment table retraction mechanism, using backup battery power or hydraulic backups with the unit off; helmet microswitches; emergency timing circuits; and stereotactic frames and localizing devices (trunnions).
2. Determine:

- The output for one typical set of operating conditions measured with the dosimetry system described in 41.2(57);

- The difference between the measurement made in the above bulleted point and the anticipated output expressed as a percentage of the anticipated output (i.e., the value obtained at last full calibration corrected mathematically for physical decay);
- Source output against computer calculation;
- Timer accuracy and linearity over the range of use;
- On-off error; and
- Trunnion centricity.

(4) To satisfy the requirements of 41.2(59)*"c"*(1)"2" and "3," spot checks must ensure proper functioning of:

1. Electrical interlocks at each gamma stereotactic radiosurgery room entrance;
2. Source exposure indicator lights on the gamma stereotactic radiosurgery unit, on the control console, and in the facility;
3. Viewing and intercom systems;
4. Timer termination;
5. Radiation monitors used to indicate room exposures; and
6. Emergency off buttons.

(5) A licensee shall arrange as soon as possible for the repair of any system identified in 41.2(59)*"c"*(3) that is not operating properly.

(6) If the results of the spot checks required in 41.2(59)*"c"*(4) indicate the malfunction of any system, the licensee shall lock the control console in the off position and not use the unit except as may be necessary to repair, replace, or check the malfunctioning system.

(7) A licensee shall retain for three years a record of each spot check required by 41.2(59)*"c"*(3) and (4). The record must include:

1. The date of the spot check;
2. The manufacturer's name, model number, and serial number for the gamma stereotactic radiosurgery unit and the survey instrument used to measure the output of the unit;
3. An assessment of timer linearity and accuracy;
4. The calculated on-off error;
5. A determination of trunnion centricity;
6. The difference between the anticipated output and the measured output;
7. An assessment of source output against computer calculations;
8. Notations indicating the operability of radiation monitors, helmet microswitches, emergency timing circuits, on-off buttons, electrical interlocks, source exposure indicator lights, viewing and intercom systems, timer termination, treatment table retraction mechanism, and stereotactic frames and localizing devices (trunnions); and
9. The name of the individual who performed the periodic spot check and the signature of the authorized medical physicist who reviewed the record of the spot check.

(8) A licensee shall retain a copy of the procedures required in 41.2(59)*"c"*(2) until the licensee no longer possesses the gamma stereotactic radiosurgery unit.

41.2(60) *Radiation surveys for teletherapy facilities.*

a. In addition to the survey requirements in 641—40.36(136C), a person licensed under 641—41.2(136C) shall make surveys to ensure that the maximum radiation levels and average radiation levels from the surface of the main source safe with the source in the shielded position do not exceed the levels stated in the Sealed Source and Device Registry.

b. The licensee shall make the survey required in 41.2(60)*"a"* at installation of a new source, and following repairs to the source shielding, the source driving unit, or other electronic or mechanical component that could expose the source, reduce the shielding around the source, or compromise the radiation safety of the source.

c. A licensee shall maintain a record of the radiation measurements made following installation of a source for the duration of the license. The record shall include the date of the measurements, the reason the survey is required, the manufacturer's name, model number and serial number of the teletherapy unit, the source, and the instrument used to measure radiation levels, each dose rate measured around the

teletherapy source while in the "off" position and the average of all measurements, a plan of the areas surrounding the treatment room that were surveyed, the measured dose rate at several points in each area expressed in millirems (μSv) per hour, the calculated maximum level of radiation over a period of one week for each restricted and unrestricted area, and the signature of the radiation safety officer.

41.2(61) *Safety spot checks for teletherapy facilities.*

a. A licensee shall promptly check all systems listed in 41.2(59)*"g"* for proper function after each installation of a teletherapy source and after making any change for which an amendment is required by 41.2(51).

b. If the results of the safety spot checks required in 41.2(61)*"a"* indicate the malfunction of any system specified in 41.2(59), the licensee shall lock the control console in the "off" position and not use the unit except as may be necessary to repair, replace, or check the malfunctioning system.

c. A licensee shall maintain a record of the safety spot checks following installation of a source for three years. The record shall include notations indicating the operability of each entrance door interlock, each electrical or mechanical stop, each beam condition indicator light, the viewing system, doors, and the signature of the radiation safety officer.

41.2(62) *Modification of teletherapy unit or room before beginning a treatment program.* If the survey required by 41.2(60) indicates that any individual member of the public is likely to receive a dose greater than those permitted by 641—40.26(136C) before beginning the treatment program, the licensee shall:

a. Either equip the unit with stops or add additional radiation shielding to ensure compliance with 641—40.26(136C);

b. Perform the survey required by 41.2(60) again; and

c. Include in the report required by 41.2(63) the results of the initial survey, a description of the modification made to comply with 41.2(62)*"a,"* and the results of the second survey; or

d. Request and receive a license amendment under 641—40.26(136C) that authorizes radiation levels in unrestricted areas greater than those permitted by 641—40.26(136C).

41.2(63) *Reports of teletherapy surveys, checks, tests, and measurements.* A licensee shall furnish a copy of the records required in 41.2(60), 41.2(61), and 41.2(62) and the output from the teletherapy source expressed as rems (sieverts) per hour at 1 meter from the source as determined during the full calibration required in 41.2(58) to the agency within 30 days following completion of the action that initiated the record requirement.

41.2(64) *Five-year inspection.*

a. A licensee shall have each teletherapy unit and gamma stereotactic radiosurgery unit fully inspected and serviced during teletherapy source replacement or at intervals not to exceed five years, whichever comes first, to ensure proper functioning of the source exposure mechanism.

b. This inspection and servicing shall be performed only by persons specifically licensed to do so by the agency, an agreement state, or the U.S. Nuclear Regulatory Commission.

c. A licensee shall maintain a record of the inspection and servicing for the duration of the license. The record shall contain the inspector's name, the inspector's license number, the date of inspection, the manufacturer's name and model number and serial number for both the teletherapy unit and gamma stereotactic radiosurgery unit and source, a list of components inspected, a list of components serviced and the type of service, a list of components replaced, and the signature of the inspector.

41.2(65) *Training for radiation safety officer.* Except as provided in 41.2(75), the licensee shall require an individual fulfilling the responsibilities of the radiation safety officer as provided in 41.2(8) to be an individual who:

a. Is certified by a specialty board whose certification process has been recognized by this agency, NRC, or an agreement state and who meets the requirements in 41.2(65)*"d"* and *"e."* (The names of the specialty boards that have been recognized by the agency, NRC, or agreement state must be posted on the NRC's Web page.) To have its certification process recognized, a specialty board shall:

(1) Require all candidates for certification to:

1. Hold a bachelor's or graduate degree from an accredited college or university in physical science or engineering or biological science with a minimum of 20 college credits in physical science;

2. Have five or more years of professional experience in health physics (graduate training may be substituted for no more than two years of the required experience) including at least three years in applied health physics; and

3. Pass an examination administered by diplomats of the specialty board, which evaluates knowledge and competence in radiation physics and instrumentation, radiation protection, mathematics pertaining to the use and measurement of radioactivity, radiation biology, and radiation dosimetry; or

(2) Require all candidates for certification to:

1. Hold a master's or doctor's degree in physics, medical physics, other physical science, engineering, or applied mathematics from an accredited college or university;

2. Have two years of either full-time practical training or supervised experience in medical physics under the supervision of a medical physicist who is certified in medical physics by a specialty board recognized by the agency, NRC, or an agreement state, or in clinical nuclear medicine facilities providing either diagnostic or therapeutic services under the direction of physicians who meet the requirements for authorized users in 41.2(68), 41.2(69), or 41.2(75); and

3. Pass an examination administered by diplomats of the specialty board that assesses knowledge and competence in clinical diagnostic radiological or nuclear medicine physics and in radiation safety; or

b. Has completed a structured educational program consisting of both:

(1) 200 hours of classroom and laboratory training in the following areas:

1. Radiation physics and instrumentation;

2. Radiation protection;

3. Mathematics pertaining to the use and measurement of radioactivity;

4. Radiation biology; and

5. Radiation dosimetry; and

(2) One year of full-time radiation safety experience under the supervision of the individual identified as the radiation safety officer on an agency, NRC, or agreement state license or permit issued by the NRC master material licensee that authorizes similar types of use of radioactive material involving the following:

1. Shipping, receiving, and performing related radiation surveys;

2. Using and performing checks for proper operation of instruments used to determine the activity of dosages, survey meters, and instruments used to measure radionuclides;

3. Securing and controlling radioactive material;

4. Using administrative controls to avoid mistakes in the administration of radioactive material;

5. Using procedures to prevent or minimize radioactive contamination and using proper decontamination procedures;

6. Using emergency procedures to control radioactive material; and

7. Disposing of radioactive material; or

c. (1) Is a medical physicist who has been certified by a specialty board whose certification process has been recognized by the agency, NRC, or an agreement state under 41.2(74) and has experience in radiation safety for similar types of use of radioactive material for which the licensee is seeking the approval of the individual as a radiation safety officer and who meets the requirements in 41.2(65)*"d"* and *"e"*; or

(2) Is an authorized user, authorized medical physicist, or authorized nuclear pharmacist identified on the licensee's license and has experience with the radiation safety aspects of similar types of use of radioactive material for which the individual has radiation safety officer responsibilities; and

d. Has obtained written attestation, signed by a preceptor radiation safety officer, that the individual has satisfactorily completed the requirements in 41.2(65)*"e"* and 41.2(65)*"a"*(1)"1" and "2" or 41.2(65)*"a"*(2)"1" and "2" or 41.2(65)*"b"*(1) or 41.2(65)*"c"*(1), and has achieved a level of radiation safety knowledge sufficient to function independently as a radiation safety officer for a medical use licensee; and

e. Has training in the radiation safety, regulatory issues, and emergency procedures for the types of use for which the licensee is seeking approval. This training requirement may be satisfied by completing

training that is supervised by a radiation safety officer, authorized medical physicist, authorized nuclear pharmacist, or authorized user, as appropriate, who is authorized for the type of use for which the licensee is seeking approval.

41.2(66) *Training for experienced radiation safety officer.* Rescinded IAB 3/29/06, effective 5/3/06.

41.2(67) *Training for uptake, dilution, and excretion studies.* Except as provided in 41.2(75), the licensee shall require an authorized user of unsealed radioactive material for the uses authorized under 41.2(31) to be a physician who:

a. Is certified by a medical specialty board whose certification process has been recognized by the agency, NRC, or an agreement state and who meets the requirements in 41.2(67)*"c."* (The names of specialty boards that have been recognized by the agency, NRC, or agreement state must be posted on the NRC's Web page.) To have its certification process recognized, a specialty board shall require all candidates for certification to:

(1) Complete 60 hours of training and experience in basic radionuclide handling techniques and radiation safety applicable to the medical use of unsealed radioactive material for uptake, dilution, and excretion studies as described in 41.2(67)*"c"*(1)"1" and "2"; and

(2) Pass an examination administered by diplomats of the specialty board that assesses knowledge and competence in radiation safety, radionuclide handling, and quality control; or

b. Is an authorized user under 41.2(68) or 41.2(69) or meets equivalent NRC or agreement state requirements; or

c. (1) Has completed 60 hours of training and experience, including a minimum of 8 hours of classroom and laboratory training, in basic radionuclide handling techniques applicable to the medical use of unsealed radioactive material for uptake, dilution, and excretion studies. The training and experience must include:

1. Classroom and laboratory training in radiation physics and instrumentation; radiation protection; mathematics pertaining to the use and measurement of radioactivity, chemistry of radioactive material for medical use, and radiation biology; and

2. Work experience, under the supervision of an authorized user who meets the requirements in 41.2(67), 41.2(68), 41.2(69) or 41.2(75) or equivalent NRC or agreement state requirements, involving:

- Ordering, receiving, and unpacking radioactive materials safely and performing the related radiation surveys;
- Performing quality control procedures on instruments used to determine the activity of dosages and performing checks for proper operation of survey meters;
- Calculating, measuring, and safely preparing patient or human research subject dosages;
- Using administrative controls to prevent a medical event involving the use of unsealed radioactive material;
- Using procedures to contain spilled radioactive material safely and using proper decontamination procedures;
- Administering dosages of radioactive drugs to patients or human research subjects; and

(2) Has obtained written attestation, signed by a preceptor authorized user who meets the requirements in 41.2(67), 41.2(68), 41.2(69) or 41.2(75) or equivalent NRC or agreement state requirements, that the individual has satisfactorily completed the requirements in 41.2(67)*"a"*(1) or 41.2(67)*"c"*(1) and has achieved a level of competency sufficient to function independently as an authorized user for the medical uses authorized in 41.2(31).

41.2(68) *Training for imaging and localization studies.* Except as provided in 41.2(75), the licensee shall require the authorized user of unsealed radioactive material for the uses authorized under 41.2(33) to be a physician who:

a. Is certified by a medical specialty board whose certification process has been recognized by the agency, NRC, or an agreement state and who meets the requirements in 41.2(68)*"c."* (The names of specialty boards that have been recognized by the agency, NRC, or agreement state must be posted on the NRC's Web page.) To have its certification process recognized, a specialty board shall require all candidates for certification to:

(1) Complete 700 hours of training and experience in basic radionuclide handling techniques and radiation safety applicable to the medical use of unsealed radioactive material for imaging and localization studies as described in 41.2(68)*"c"*(1)"1" and "2"; and

(2) Pass an examination administered by diplomats of the specialty board, which assesses knowledge and competence in radiation safety, radionuclide handling, and quality control; or

b. Is an authorized user under 41.2(69) and meets the requirements in 41.2(68)*"c"*(1)"2," seventh bulleted paragraph, or equivalent NRC or agreement state requirements; or

c. (1) Has completed 700 hours of training and experience, including a minimum of 80 hours of classroom and laboratory training, in basic radionuclide handling techniques applicable to the medical use of unsealed radioactive material for imaging and localization studies. The training and experience must include, at a minimum:

1. Classroom and laboratory training in the following areas:

- Radiation physics and instrumentation;
- Radiation protection;
- Mathematics pertaining to the use and measurement of radioactivity;
- Chemistry of radioactive material for medical use;
- Radiation biology, and

2. Work experience, under the supervision of an authorized user who meets the requirements in 41.2(68); 41.2(68)*"c"*(1)"2," seventh bulleted paragraph, and 41.2(69); 41.2(75); or equivalent NRC or agreement state requirements, involving:

- Ordering, receiving, and unpacking radioactive materials safely and performing the related radiation surveys;
- Performing quality control procedures on instruments used to determine the activity of dosages and performing checks for proper operation of survey meters;
- Calculating, measuring, and safely preparing patient or human research subject dosages;
- Using administrative controls to prevent a medical event involving the use of unsealed radioactive material;
- Using procedures to contain spilled radioactive material safely and using proper decontamination procedures;
- Administering dosages of radioactive drugs to patients or human research subjects; and
- Eluting generator systems appropriate for preparation of radioactive drugs for imaging and localization studies, measuring and testing the eluate for radionuclidic purity, and processing the eluate with reagent kits to prepare labeled radioactive drugs; and

(2) Has obtained written attestation, signed by a preceptor authorized user who meets the requirements in 41.2(68); 41.2(69) and 41.2(68)*"c"*(1)"2," seventh bulleted paragraph; 41.2(75); or equivalent NRC or agreement state requirements, that the individual has satisfactorily completed the requirements in 41.2(68)*"a"*(1) or 41.2(68)*"c"*(1) and has achieved a level of competency sufficient to function independently as an authorized user for the medical uses authorized under 41.2(31) and 41.2(33).

41.2(69) *Training for use of unsealed by-product material for which a written directive is required.* Except as provided in 41.2(75), the licensee shall require an authorized user of unsealed radioactive material for the uses authorized under 41.2(37) to be a physician who:

a. Is certified by a medical specialty board whose certification process has been recognized by the agency, NRC, or an agreement state and who meets the requirements in 41.2(69)*"b"*(1)"2," seventh bulleted paragraph, and 41.2(69)*"b"*(2). (The names of the specialty boards that have been recognized by the agency, NRC, or agreement state must be posted on the NRC's Web page.) To be recognized, a specialty board shall require all candidates for certification to:

(1) Successfully complete residency training in a radiation therapy or nuclear medicine training program or a program in a related medical specialty. These residency training programs must include 700 hours of training and experience as described in 41.2(69)*"b"*(1)"1" through 41.2(69)*"b"*(1)"2," fifth bulleted paragraph. Eligible training programs must be approved by the Residency Review Committee of the Accreditation Council for Graduate Medical Education, the Royal College of

Physicians and Surgeons of Canada, or the Committee on Post-Graduate Training of the American Osteopathic Association; and

(2) Pass an examination, administered by diplomats of the specialty board, which tests knowledge and competence in radiation safety, radionuclide handling, quality assurance, and clinical use of unsealed radioactive material for which a written directive is required; or

b. (1) Has completed 700 hours of training and experience, including a minimum of 200 hours of classroom and laboratory training, in basic radionuclide handling techniques applicable to the medical use of unsealed radioactive material requiring a written directive. The training and experience must include:

1. Classroom and laboratory training in the following areas:

- Radiation physics and instrumentation;
- Radiation protection;
- Mathematics pertaining to the use and measurement of radioactivity;
- Chemistry of radioactive material for medical use; and
- Radiation biology; and

2. Work experience, under the supervision of an authorized user who meets the requirements in 41.2(69) or 41.2(75) or equivalent NRC or agreement state requirements. A supervising authorized user who meets the requirements in 41.2(69)*"b"* must also have experience in administering dosages in the same dosage category or categories (i.e., 41.2(69)*"b"*(1)"2," seventh bulleted paragraph) as the individual requesting authorized user status. The work experience must involve:

- Ordering, receiving, and unpacking radioactive materials safely and performing the related radiation surveys;
- Performing quality control procedures on instruments used to determine the activity of dosages and performing checks for proper operation of survey meters;
- Calculating, measuring, and safely preparing patient or human research subject dosages;
- Using administrative controls to prevent a medical event involving the use of unsealed radioactive material;
- Using procedures to contain spilled radioactive material safely and using proper decontamination procedures;
- Reserved.
- Administering dosages of radioactive drugs to patients or human research subjects involving a minimum of three cases in each of the following categories for which the individual is requesting authorized user status:

– Oral administration of less than or equal to 33 millicuries (1.22 gigabecquerels) of sodium iodide I-131, for which a written directive is required;

– Oral administration of greater than 33 millicuries (1.22 gigabecquerels) of sodium iodide I-131 (experience with at least three cases in this category also satisfies the requirement in the above category);

– Parenteral administration of either any beta emitter or a photon-emitting radionuclide with a photon energy less than 150 keV for which a written directive is required; or

– Parenteral administration of any other radionuclide for which a written directive is required; and

(2) Has obtained written attestation that the individual has satisfactorily completed the requirements in 41.2(69)*"a"*(1) and 41.2(69)*"b"*(1)"2," seventh bulleted paragraph, or 41.2(69)*"b"*(1), and has achieved a level of competency sufficient to function independently as an authorized user for the medical uses authorized under 41.2(37). The written attestation must be signed by a preceptor authorized user who meets the requirements in 41.2(69) or 41.2(75) or equivalent NRC or agreement state requirements. The preceptor authorized user who meets the requirements in 41.2(69)*"b"* must have experience in administering dosages in the same dosage category or categories (i.e., 41.2(69)*"b"*(1)"2," seventh bulleted paragraph) as the individual requesting authorized user status.

c. For training only for oral administration of sodium iodide I-131 requiring a written directive in quantities less than or equal to 33 millicuries (1.22 gigabecquerels) or quantities greater than 33 millicuries (1.22 gigabecquerels), see 41.2(81) or 41.2(82).

41.2(70) *Training for use of manual brachytherapy sources.* Except as provided in 41.2(75), the licensee shall require an authorized user of a manual brachytherapy source for the uses authorized under 41.2(43) to be a physician who:

a. Is certified by a medical specialty board whose certification process has been recognized by the agency, NRC, or an agreement state, and who meets the requirements in 41.2(70)*"b"*(3). (The names of the specialty boards that have been recognized by the agency, NRC, or agreement state must be posted on the NRC's Web page.) To have its certification process recognized, a specialty board shall require all candidates for certification to:

(1) Successfully complete a minimum of three years of residency training in a radiation oncology program approved by the Residency Review Committee of the Accreditation Council for Graduate Medical Education or the Royal College of Physicians and Surgeons of Canada or the Committee on Post-Graduate Training of the American Osteopathic Association; and

(2) Pass an examination, administered by diplomats of the specialty board, that tests knowledge and competence in radiation safety, radionuclide handling, treatment planning, quality assurance, and clinical use of manual brachytherapy; or

b. (1) Has completed a structured educational program in basic radionuclide handling techniques applicable to the use of manual brachytherapy sources that includes:

1. 200 hours of classroom and laboratory training in the following areas:

- Radiation physics and instrumentation;
- Radiation protection;
- Mathematics pertaining to the use and measurement of radioactivity; and
- Radiation biology; and

2. 500 hours of work experience, under the supervision of an authorized user who meets the requirements in 41.2(70) or 41.2(75) or equivalent NRC or agreement state requirements at a medical institution, involving:

- Ordering, receiving, and unpacking radioactive materials safely and performing the related radiation surveys;
- Checking survey meters for proper operation;
- Preparing, implanting, and removing brachytherapy sources;
- Maintaining running inventories of material on hand;
- Using administrative controls to prevent a medical event involving the use of radioactive material; and
- Using emergency procedures to control radioactive material; and

(2) Has completed three years of supervised clinical experience in radiation oncology under an authorized user who meets the requirements in 41.2(70) or 41.2(75) or equivalent NRC or agreement state requirements, as part of a formal training program approved by the Residency Review Committee for Radiation Oncology of the Accreditation Council for Graduate Medical Education or the Royal College of Physicians and Surgeons of Canada or the Committee on Postdoctoral Training of the American Osteopathic Association. This experience may be obtained concurrently with the supervised work experience required in 41.2(70)*"b"*(1)"2"; and

(3) Has obtained written attestation, signed by a preceptor authorized user who meets the requirements in 41.2(70) or 41.2(75) or equivalent NRC or agreement state requirements, that the individual has satisfactorily completed the requirements in 41.2(70)*"a"*(1) or 41.2(70)*"b"*(1) and (2), and has achieved a level of competency sufficient to function independently as an authorized user of manual brachytherapy sources for the medical uses authorized under 41.2(43).

41.2(71) *Training for ophthalmic use of strontium-90.* Except as provided in 41.2(75), the licensee shall require the authorized user of strontium-90 for ophthalmic radiotherapy to be a physician who:

a. Is an authorized user under 41.2(70) or equivalent NRC or agreement state requirements; or

b. (1) Has completed 24 hours of classroom and laboratory training applicable to the medical use of strontium-90 for ophthalmic radiotherapy. The training must include:

1. Radiation physics and instrumentation;
2. Radiation protection;

3. Mathematics pertaining to the use and measurement of radioactivity; and
4. Radiation biology; and

(2) Has completed supervised clinical training in ophthalmic radiotherapy under the supervision of an authorized user at a medical institution, clinic, or private practice that includes the use of strontium-90 for the ophthalmic treatment of five individuals. This supervised clinical training must involve:

1. Examination of each individual to be treated;
2. Calculation of the dose to be administered;
3. Administration of the dose; and
4. Follow-up and review of each individual's case history; and

(3) Has obtained written attestation, signed by a preceptor authorized user who meets the requirements in 41.2(70), 41.2(71) or 41.2(75) or equivalent NRC or agreement state requirements, that the individual has satisfactorily completed the requirements in 41.2(71)*"b"*(1) and (2) and has achieved a level of competency sufficient to function independently as an authorized user of strontium-90 for ophthalmic use.

41.2(72) *Training for use of sealed sources for diagnosis.* Except as provided in 41.2(75), the licensee shall require the authorized user of a diagnostic sealed source for use in a device authorized under 41.2(41) to be a physician, dentist, or podiatrist who:

a. Is certified by a specialty board whose certification process includes all of the requirements in 41.2(72)*"b"* and *"c"* and whose certification has been recognized by the agency, NRC, or an agreement state. (The names of the specialty boards that have been recognized by the agency, NRC, or agreement state must be posted on the NRC's Web page.); or

b. Has completed eight hours of classroom and laboratory training in basic radionuclide handling techniques specifically applicable to the use of the device. The training must include:

(1) Radiation physics and instrumentation;
(2) Radiation protection;
(3) Mathematics pertaining to the use and measurement of radioactivity; and
(4) Radiation biology; and

c. Has completed training in the use of the device for the uses requested.

41.2(73) *Training for use of remote afterloader units, teletherapy units, and gamma stereotactic radiosurgery units.* Except as provided in 41.2(75), the licensee shall require an authorized user of a sealed source for a use authorized under 41.2(49) to be a physician who:

a. Is certified by a medical specialty board whose certification process has been recognized by the agency, NRC, or an agreement state, and who meets the requirements in 41.2(73)*"b"*(3) and 41.2(73)*"c."* (The names of the specialty boards that have been recognized by the agency, NRC, or agreement state must be posted on the NRC's Web page.) To have its certification process recognized, a specialty board shall require all candidates for certification to:

(1) Successfully complete a minimum of three years of residency training in a radiation therapy program approved by the Residency Review Committee of the Accreditation Council for Graduate Medical Education or the Royal College of Physicians and Surgeons of Canada or the Committee on Post-Graduate Training of the American Osteopathic Association; and

(2) Pass an examination, administered by diplomats of the specialty board, which tests knowledge and competence in radiation safety, radionuclide handling, treatment planning, quality assurance, and clinical use of stereotactic radiosurgery, remote afterloaders, and external beam therapy; or

b. (1) Has completed a structured educational program in basic radionuclide techniques applicable to the use of a sealed source in a therapeutic medical unit that includes:

1. 200 hours of classroom and laboratory training in the following areas:

- Radiation physics and instrumentation;
- Radiation protection;
- Mathematics pertaining to the use and measurement of radioactivity; and
- Radiation biology; and

2. 500 hours of work experience, under the supervision of an authorized user who meets the requirements in 41.2(73) or 41.2(75) or equivalent NRC or agreement state requirements at a medical institution, involving:

- Reviewing full calibration measurements and periodic spot checks;
- Preparing treatment plans and calculating treatment doses and times;
- Using administrative controls to prevent a medical event involving the use of radioactive material;
- Implementing emergency procedures to be followed in the event of the abnormal operation of the medical unit or console;
- Checking and using survey meters; and
- Selecting the proper dose and how it is to be administered; and

(2) Has completed three years of supervised clinical experience in radiation therapy under an authorized user who meets the requirements in 41.2(73) or 41.2(75) or equivalent NRC or agreement state requirements, as part of a formal training program approved by the Residency Review Committee for Radiation Oncology of the Accreditation Council for Graduate Medical Education or the Royal College of Physicians and Surgeons of Canada or the Committee on Postdoctoral Training of the American Osteopathic Association. This experience may be obtained concurrently with the supervised work experience required by 41.2(73)*"b"*(1)"2"; and

(3) Has obtained written attestation that the individual has satisfactorily completed the requirements in 41.2(73)*"a"*(1) or 41.2(73)*"b"*(1) and (2), and 41.2(73)*"c,"* and has achieved a level of competency sufficient to function independently as an authorized user of each type of therapeutic medical unit for which the individual is requesting authorized user status. The written attestation must be signed by a preceptor authorized user who meets the requirements in 41.2(73) or 41.2(75) or equivalent NRC or agreement state requirements for an authorized user for each type of therapeutic medical unit for which the individual is requesting authorized user status; and

c. Has received training in device operation, safety procedures, and clinical use for the type of use for which authorization is sought. This training requirement may be satisfied by satisfactory completion of a training program provided by the vendor for new users or by receiving training supervised by an authorized user or authorized medical physicist, as appropriate, who is authorized for the type of use for which the individual is seeking authorization.

41.2(74) *Training for an authorized medical physicist.* Except as provided in 41.2(75), the licensee shall require the authorized medical physicist to be an individual who:

a. Is certified by a specialty board whose certification process has been recognized by the agency, NRC, or an agreement state and who meets the requirements in 41.2(74)*"b"*(2) and 41.2(74)*"c."* (The names of the specialty boards that have been recognized by the agency, NRC, or agreement state must be posted on the NRC's Web page.) To have its certification process recognized, a specialty board shall require all candidates for certification to:

(1) Hold a master's or doctor's degree in physics, medical physics, other physical science, engineering, or applied mathematics from an accredited college or university;

(2) Have two years of either full-time practical training or supervised experience in medical physics:

1. Under the supervision of a medical physicist who is certified in medical physics by a specialty board recognized by the agency, NRC, or an agreement state; or

2. In clinical radiation facilities providing high-energy, external beam therapy (photons and electrons with energies greater than or equal to 1 million electron volts) and brachytherapy services under the direction of physicians who meet the requirements for authorized users in 41.2(70), 41.2(73), or 41.2(75); and

(3) Pass an examination, administered by diplomats of the specialty board, that assesses knowledge and competence in clinical radiation therapy, radiation safety, calibration, quality assurance, and treatment planning for external beam therapy, brachytherapy, and stereotactic radiosurgery; or

b. (1) Holds a master's or doctor's degree in physics, medical physics, other physical science, engineering, or applied mathematics from an accredited college or university; and has completed one

year of full-time training in medical physics and an additional year of full-time work experience under the supervision of an individual who meets the requirements for an authorized medical physicist for the type of use for which the individual is seeking authorization. This training and work experience must be conducted in clinical radiation facilities that provide high-energy, external beam therapy (photons and electrons with energies greater than or equal to 1 million electron volts) and brachytherapy services and must include:

1. Performing sealed source leak tests and inventories;
2. Performing decay corrections;
3. Performing full calibration and periodic spot checks of external beam treatment units, stereotactic radiosurgery units, and remote afterloading units, as applicable; and
4. Conducting radiation surveys around external beam treatment units, stereotactic radiosurgery units, and remote afterloading units, as applicable; and

(2) Has obtained written attestation that the individual has satisfactorily completed the requirements in 41.2(74)*"a"*(1) and (2) and 41.2(74)*"c"* or 41.2(74)*"b"*(1) and 41.2(74)*"c,"* and has achieved a level of competency sufficient to function independently as an authorized medical physicist for each type of therapeutic medical unit for which the individual is requesting authorized medical physicist status. The written attestation must be signed by a preceptor authorized medical physicist who meets the requirements in 41.2(74) or 41.2(75) or equivalent NRC or agreement state requirements for an authorized medical physicist for each type of therapeutic medical unit for which the individual is requesting authorized medical physicist status; and

c. Has training for the type of use for which authorization is sought that includes hands-on device operation, safety procedures, clinical use, and the operation of a treatment planning system. This training requirement may be satisfied by satisfactorily completing either a training program provided by the vendor or by training supervised by an authorized medical physicist who is authorized for the type of use for which the individual is seeking authorization.

41.2(75) *Training for experienced radiation safety officer, authorized medical physicist, nuclear pharmacist, authorized nuclear pharmacist, authorized users and teletherapy or medical physicists.*

a. (1) An individual identified as a radiation safety officer, teletherapy or medical physicist, or nuclear pharmacist on an agency, NRC or agreement state license or a permit issued by an NRC or agreement state broad scope licensee or master material license permit or by a master material license permittee of broad scope before January 1, 2003, does not need to comply with the training requirements of 41.2(65), 41.2(74), or 41.2(78).

(2) An individual identified as a radiation safety officer, an authorized medical physicist, or an authorized nuclear pharmacist on the agency, NRC, or agreement state license or permit issued by the agency, NRC, or agreement state broad scope licensee or issued by master material license permit or issued by a master material license permittee of broad scope between January 1, 2003, and May 3, 2006, need not comply with the training requirements of 41.2(65), 41.2(74), or 41.2(78).

b. (1) Physicians, dentists, or podiatrists identified as authorized users for the medical use of radioactive material on a license issued by the agency, the NRC, or agreement state, a permit issued by an NRC master material licensee, a permit issued by an NRC broad scope licensee, or a permit issued by an NRC master material license broad scope permittee before January 1, 2003, who perform only those medical uses for which they were authorized before that date need not comply with the training requirements of 41.2(67), 41.2(68), 41.2(69), 41.2(70), 41.2(71), 41.2(72), 41.2(73), 41.2(81), 41.2(82), or 41.2(89).

(2) Physicians, dentists, or podiatrists identified as authorized users for the medical use of radioactive material issued by the agency, the NRC, or agreement state, a permit issued by an NRC master material licensee, a permit issued by an NRC broad scope licensee, or a permit issued by an NRC master material license broad scope permittee who perform only those medical uses for which they were authorized between January 1, 2003, and May 3, 2006, need not comply with the training requirements of 41.2(67), 41.2(68), 41.2(69), 41.2(70), 41.2(71), 41.2(72), 41.2(73), 41.2(81), 41.2(82), or 41.2(89).

c. Individuals who need not comply with training requirements as described in this subrule may serve as preceptors for, and supervisors of, applicants seeking authorization on an agency license for the same uses for which these individuals are authorized.

41.2(76) *Physician training in a three-month program.* Rescinded IAB 8/1/07, effective 9/5/07.

41.2(77) *Recentness of training.* The training and experience specified in 41.2(65) to 41.2(78) and 41.2(81), 41.2(82), and 41.2(89) shall have been obtained within the seven years preceding the date of application or the individual shall have had related continuing education and continuing applicable experience since the required training and experience were completed.

41.2(78) *Training for an authorized nuclear pharmacist.* Except as provided in 41.2(75), the licensee shall require the authorized nuclear pharmacist to be a pharmacist who:

a. Is certified as a nuclear pharmacist by a specialty board whose certification process includes all of the requirements of 41.2(78)*"b."* (The names of the specialty boards that have been recognized by the agency, NRC, or agreement state must be posted on the NRC's Web page.) To have its certification process recognized, a specialty board shall require all candidates for certification to:

(1) Have graduated from a pharmacy program accredited by the American Council on Pharmaceutical Education (ACPE) or have passed the Foreign Pharmacy Graduate Examination Committee (FPGEC) examination;

(2) Hold a current, active license to practice pharmacy;

(3) Provide evidence of having acquired at least 4,000 hours of combined training and experience in nuclear pharmacy practice. Academic training may be substituted for no more than 2,000 hours of the required training and experience; and

(4) Pass an examination in nuclear pharmacy administered by diplomats of the specialty board that assesses knowledge and competency in procurement, compounding, quality assurance, dispensing, distribution, health and safety, radiation safety, provision of information and consultation, monitoring patient outcomes, research and development; or

b. Has completed 700 hours in a structured education program consisting of both:

(1) 200 hours of classroom and laboratory training in the following areas:

1. Radiation physics and instrumentation;
2. Radiation protection;
3. Mathematics pertaining to the use and measurement of radioactivity;
4. Chemistry of radioactive material for medical use; and
5. Radiation biology; and

(2) Supervised practical experience in a nuclear pharmacy involving:

1. Shipping, receiving, and performing related radiation surveys;
2. Using and performing checks for proper operation of instruments used to determine the activity of dosages, survey meters and, if appropriate, instruments used to measure alpha- or beta-emitting radionuclides;
3. Calculating, assaying, and safely preparing dosages for patients or human research subjects;
4. Using administrative controls to avoid medical events in the administration of by-product material; and
5. Using procedures to prevent or minimize radioactive contamination and using proper decontamination procedures; and

c. Has obtained written attestation, signed by a preceptor authorized nuclear pharmacist, that the individual satisfactorily completed the requirements in 41.2(78)*"a"*(1), (2), and (3), or 41.2(78)*"b"*(1) and has achieved a level of competency sufficient to function independently as an authorized nuclear pharmacist.

41.2(79) *Training for experienced nuclear pharmacists.* Rescinded IAB 8/1/07, effective 9/5/07.

41.2(80) *Training for nuclear medicine technologists.* Rescinded IAB 4/2/03, effective 5/7/03.

41.2(81) *Training for the oral administration of sodium iodide I-131 requiring a written directive in quantities less than or equal to 33 millicuries (1.22 gigabecquerels).* Except as provided in 41.2(75), the licensee shall require an authorized user for the oral administration of sodium iodide I-131 requiring a

written directive in quantities less than or equal to 33 millicuries (1.22 gigabecquerels) to be a physician who:

a. Is certified by a medical specialty board whose certification process includes all of the requirements in 41.2(81)*"c"*(1) and (2) and whose certification process has been recognized by the agency, NRC, or an agreement state and who meets the requirements in 41.2(81)*"c"*(3). (The names of the specialty boards that have been recognized by the agency, NRC, or agreement state must be posted on the NRC's Web page.); or

b. Is an authorized user under 41.2(69)*"a"* or *"b"* for uses in the oral administration of less than or equal to 33 millicuries (1.22 gigabecquerels) of sodium iodide I-131 for which a written directive is required, or oral administration of greater than 33 millicuries (1.22 gigabecquerels) of sodium iodide I-131 or 41.2(82) or equivalent NRC or agreement state requirements; or

c. (1) Has successfully completed 80 hours of classroom and laboratory training, applicable to the medical use of sodium iodide I-131 for procedures requiring a written directive. The training must include:

1. Radiation physics and instrumentation;
2. Radiation protection;
3. Mathematics pertaining to the use and measurement of radioactivity;
4. Chemistry of radioactive material for medical use; and
5. Radiation biology; and

(2) Has work experience, under the supervision of an authorized user who meets the requirements in 41.2(69)*"a"* or *"b,"*41.2(75), 41.2(81) or 41.2(82) or equivalent NRC or agreement state requirements. A supervising authorized user who meets the requirements in 41.2(69)*"b"* must also have experience in administering dosages as follows: oral administration of less than or equal to 33 millicuries (1.22 gigabecquerels) of sodium iodide I-131, for which a written directive is required; or oral administration of greater than 33 millicuries (1.22 gigabecquerels) of sodium iodide I-131. The work experience must involve:

1. Ordering, receiving, and unpacking radioactive materials safely and performing the related radiation surveys;
2. Performing quality control procedures on instruments used to determine the activity of dosages and performing checks for proper operation of survey meters;
3. Calculating, measuring, and safely preparing patient or human research subject dosages;
4. Using administrative controls to prevent a medical event involving the use of radioactive material;
5. Using procedures to contain spilled radioactive material safely and using proper decontamination procedures; and
6. Administering dosages to patients or human research subjects that include at least three cases involving the oral administration of less than or equal to 33 millicuries (1.22 Gigabecquerels) of sodium iodide I-131; and

(3) Has obtained written attestation that the individual has satisfactorily completed the requirements in 41.2(81)*"c"*(1) and (2), and has achieved a level of competency sufficient to function independently as an authorized user for medical uses authorized under 41.2(37). The written attestation must be signed by a preceptor authorized user who meets the requirements in 41.2(69), 41.2(75), 41.2(81) or 41.2(82) or equivalent NRC or agreement state requirements. A preceptor authorized user who meets the requirements in 41.2(69)*"b"* must also have experience in administering dosages as follows: oral administration of less than or equal to 33 millicuries (1.22 gigabecquerels) of sodium iodide I-131, for which a written directive is required; or oral administration of greater than 33 millicuries (1.22 gigabecquerels) of sodium iodide I-131.

41.2(82) *Training for the oral administration of sodium iodide I-131 requiring a written directive in quantities greater than 33 millicuries (1.22 gigabecquerels).* Except as provided in 41.2(75), the licensee shall require an authorized user for the oral administration of sodium iodide I-131 requiring a written directive in quantities greater than 33 millicuries (1.22 gigabecquerels) to be a physician who:

a. Is certified by a medical specialty board whose certification process includes all of the requirements in 41.2(82)*"c"*(1) and (2), and whose certification has been recognized by the agency, NRC, or agreement state, and who meets the requirements in 41.2(82)*"c"*(3). (The names of the specialty boards that have been recognized by the agency, NRC, or agreement state must be posted on the NRC's Web page.); or

b. Is an authorized user under 41.2(69)*"a"* or *"b"* for oral administration of greater than 33 millicuries (1.22 gigabecquerels) of sodium iodide I-131 or meets equivalent NRC or agreement state requirements; or

c. (1) Has successfully completed 80 hours of classroom and laboratory training, applicable to the medical use of sodium iodide I-131 for procedures requiring a written directive. The training must include:

1. Radiation physics and instrumentation;
2. Radiation protection;
3. Mathematics pertaining to the use and measurement of radioactivity;
4. Chemistry of radioactive material for medical use; and
5. Radiation biology; and

(2) Has work experience, under the supervision of an authorized user who meets the requirements in 41.2(69)*"a"* or *"b,"*41.2(75) or 41.2(82) or equivalent NRC or agreement state requirements. A supervising authorized user who meets the requirements in 41.2(69)*"b"* must also have experience in oral administration of greater than 33 millicuries (1.22 gigabecquerels) of sodium iodide I-131. The work experience must involve:

1. Ordering, receiving, and unpacking radioactive materials safely and performing the related radiation surveys;
2. Performing quality control procedures on instruments used to determine the activity of dosages and performing checks for proper operation of survey meters;
3. Calculating, measuring, and safely preparing patient or human research subject dosages;
4. Using administrative controls to prevent a medical event involving the use of radioactive material;
5. Using procedures to contain spilled radioactive material safely and using proper decontamination procedures; and
6. Administering dosages to patients or human research subjects that include at least three cases involving the oral administration of greater than 33 millicuries (1.22 gigabecquerels) of sodium iodide I-131; and

(3) Has obtained written attestation that the individual has satisfactorily completed the requirements in 41.2(82)*"c"*(1) and (2), and has achieved a level of competency sufficient to function independently as an authorized user for medical uses authorized in 41.2(37). The written attestation must be signed by a preceptor authorized user who meets the requirements in 41.2(69), 41.2(75) or 41.2(82) or equivalent NRC or agreement state requirements. A preceptor authorized user who meets the requirements in 41.2(69)*"b"* must also have experience in oral administration of greater than 33 millicuries (1.22 gigabecquerels) of sodium iodide I-131.

41.2(83) *Provisions for the protection of human research subjects.*

a. A licensee may conduct research involving human research subjects only if the licensee uses the radioactive materials authorized on its specific license for the uses authorized on its license.

b. If the research is conducted, funded, supported, or regulated by another federal agency that has implemented Federal Policy for the Protection of Human Subjects (Federal Policy), the licensee shall, before conducting research:

(1) Obtain review and approval of the research from an "Institutional Review Board," as defined and described in the Federal Policy; and

(2) Obtain "informed consent," as defined and described in the Federal Policy, from the human research subjects.

c. If the research will not be conducted, funded, supported, or regulated by another federal agency that has implemented the Federal Policy, the licensee shall, before conducting research, apply for and

receive a specific amendment to its medical use license. The amendment request must include a written commitment that the licensee will, before conducting research:

(1) Obtain review and approval of the research from an "Institutional Review Board," as defined and described in the Federal Policy; and

(2) Obtain "informed consent," as defined and described in the Federal Policy, from the human research subjects.

d. Nothing in this subrule relieves a licensee from complying with the other requirements of these rules.

41.2(84) *Calibration measurements of brachytherapy sources.*

a. Before the first medical use of a brachytherapy source on or after January 1, 2003, a licensee shall have:

(1) Determined the source output or activity using a dosimetry system that meets the requirements of 41.2(57);

(2) Determined the source positioning accuracy within applicators; and

(3) Used published protocols currently accepted by nationally recognized bodies to meet the requirements of 41.2(84)*"a."*

b. A licensee may use measurements that are provided by the source manufacturer or by a calibration laboratory accredited by the American Association of Physicists in Medicine and that are made in accordance with 41.2(84)*"a"*(1) and (2).

c. A licensee shall mathematically correct the outputs or activities determined in 41.2(84)*"a"* for physical decay at intervals consistent with 1 percent physical decay.

d. A licensee shall retain a record of each calibration for three years after the last use of the source. The record must include:

(1) The date of the calibration;

(2) The manufacturer's name, model number, and serial number for the source and the instruments used to calibrate the source;

(3) The source output or activity;

(4) The source positioning accuracy within the applicators; and

(5) The signature of the authorized medical physicist.

41.2(85) *Decay of strontium-90 sources for ophthalmic treatment.*

a. Only an authorized medical physicist shall calculate the activity of each strontium-90 source that is used to determine the treatment times for ophthalmic treatments. The decay must be based on the activity determined under 41.2(84).

b. A licensee shall retain a record of the activity of each strontium-90 source in accordance with 41.2(84).

41.2(86) *Therapy-related computer systems.* The licensee shall perform acceptance testing on the treatment planning system of therapy-related computer systems in accordance with published protocols accepted by nationally recognized bodies. At a minimum, the acceptance must include, as applicable, verification of:

a. The source-specific input parameters required by the dose calculation algorithm;

b. The accuracy of dose, dwell time, and treatment time calculations at representative points;

c. The accuracy of isodose plots and graphic displays;

d. The accuracy of the software used to determine sealed source positions from radiographic images; and

e. The accuracy of electronic transfer of the treatment delivery parameters to the treatment delivery unit from the treatment planning system.

41.2(87) *Written directives.* Each licensee or registrant shall meet the following objectives:

a. A written directive must be dated and signed by an authorized user before the administration of I-131 sodium iodide greater than 30 microcuries, any therapeutic dosage of unsealed by-product material or any therapeutic dose of radiation from by-product material.

(1) If, because of the emergent nature of the patient's condition, a delay in order to provide a written directive would jeopardize the patient's health, an oral directive is acceptable.

(2) The information contained in the oral directive must be documented as soon as possible in writing in the patient's record. A written directive must be prepared within 48 hours of the oral directive.

b. Prior to administration, a written directive must contain the patient's or human research subject's name and the following information:

(1) For any administration of quantities greater than 30 microcuries of either sodium iodide I-125 or I-131: the dosage;

(2) For a therapeutic administration of a radiopharmaceutical other than sodium iodide I-125 or I-131: the radiopharmaceutical, dosage, and route of administration;

(3) For gamma stereotactic radiosurgery: the total dose, treatment site, and values for the target coordinate setting per treatment for each anatomically distinct treatment site;

(4) For teletherapy: the total dose, dose per fraction, number of fractions, treatment site, and overall treatment period;

(5) For high-dose-rate remote afterloading brachytherapy: the radioisotope, treatment site, dose per fraction, number of fractions and total dose; or

(6) For all other brachytherapy, including low-, medium-, and pulsed-dose-rate remote afterloaders:

1. Prior to implantation: treatment site, the radioisotope, number of sources, and source strengths and dose; and

2. After implantation but prior to completion of the procedure: the radioisotope, treatment site, number of sources, and total source strength and exposure time (or, equivalently, the total dose);

(7) For therapeutic use of radiation machines, see 41.3(14).

c. Prior to each administration, the patient's or human research subject's identity is verified by more than one method as the individual named in the written directive.

d. The final plans of treatment and related calculations for brachytherapy, teletherapy, and gamma stereotactic radiosurgery are in accordance with the respective written directives.

e. Each administration is in accordance with the written directive through checking both manual and computer-generated dose calculations and verifying that any computer-generated dose calculations are correctly transferred into the consoles of the medical units authorized by 641—Chapter 41.

f. Any unintended deviation from the written directive is identified and evaluated, and appropriate action is taken.

g. A written revision to an existing written directive may be made if the revision is dated and signed by an authorized user before the administration of the dosage of unsealed by-product material, the brachytherapy dose, the gamma stereotactic radiosurgery dose, the teletherapy dose, or the next fractional dose.

(1) If, because of the patient's condition, a delay in order to provide a written revision to an existing written directive would jeopardize the patient's health, an oral revision to an existing written directive is acceptable.

(2) The oral revision must be documented as soon as possible in the patient's record. A revised written directive must be signed by the authorized user with 48 hours of the oral revision.

h. A copy of the written directive in auditable form shall be retained for three years after the date of administration.

41.2(88) *Other medical uses of by-product material or radiation from by-product material.* A licensee may use by-product material or a radiation source approved for medical use which is not specifically addressed in 641—41.2(136C)(e.g., Y-90 microspheres, liquid brachytherapy, intravascular brachytherapy) if:

a. The applicant or licensee has submitted the information required by the agency; and

b. The applicant or licensee has received written approval from the agency in a license or license amendment and uses the material in accordance with the regulations and specific conditions the agency considers necessary for the medical use of the material.

41.2(89) *Training for the parenteral administration of unsealed by-product material requiring a written directive.* Except as provided in 41.2(75), the licensee shall require an authorized user for the parenteral administration requiring a written directive to be a physician who:

a. Is an authorized user under 41.2(69) for parenteral administration of either any beta emitter or a photon-emitting radionuclide with a photon energy less than 150 keV for which a written directive is required or equivalent NRC or agreement state requirements; or

b. Is an authorized user under 41.2(70) or 41.2(73) or equivalent NRC or agreement state requirements, and who meets the requirements in 41.2(89)*"d"*; or

c. Is certified by a medical specialty board whose certification process has been recognized by the NRC or an agreement state under 41.2(70) or 41.2(73) and who meets the requirements in 41.2(89)*"d"*; or

d. (1) Has successfully completed 80 hours of classroom and laboratory training, applicable to parenteral administrations, for which a written directive is required, of either any beta emitter or any photon-emitting radionuclide with a photon energy less than 150 keV or parenteral administration of any other radionuclide for which a written directive is required. The training must include:

1. Radiation physics and instrumentation;
2. Radiation protection;
3. Mathematics pertaining to the use and measurement of radioactivity;
4. Chemistry of radioactive material for medical use; and
5. Radiation biology; and

(2) Has work experience, under the supervision of an authorized user who meets the requirements in 41.2(69), 41.2(75) or 41.2(89) or equivalent NRC or agreement state requirements, in the parenteral administration for which a written directive is required, of either any beta emitter or any photon-emitting radionuclide with a photon energy less than 150 keV or parenteral administration of any other radionuclide for which a written directive is required. A supervising authorized user who meets the requirements in 41.2(69) must have experience in administering dosages of either any beta emitter or any photon-emitting radionuclide with a photon energy less than 150 keV or parenteral administration of any other radionuclide for which a written directive is required. The work experience must involve:

1. Ordering, receiving, and unpacking radioactive materials safely, and performing the related radiation surveys;
2. Performing quality control procedures on instruments used to determine the activity of dosages, and performing checks for proper operation of survey meters;
3. Calculating, measuring, and safely preparing patient or human research subject dosages;
4. Using administrative controls to prevent a medical event involving the use of unsealed radioactive material;
5. Using procedures to contain spilled radioactive material safely, and using proper decontamination procedures; and
6. Administering dosages to patients or human research subjects, that include at least three cases involving the parenteral administration for which a written directive is required, of either any beta emitter or any photon-emitting radionuclide with a photon energy less than 150 keV or at least three cases involving the parenteral administration of any other radionuclide for which a written directive is required; and

(3) Has obtained written attestation that the individual has satisfactorily completed the requirements in 41.2(89)*"b"* or *"c,"* and has achieved a level of competency sufficient to function independently as an authorized user for the parenteral administration of unsealed by-product material requiring a written directive. The written attestation must be signed by a preceptor authorized user who meets the requirements in 41.2(69), 41.2(75) or 41.2(89) or equivalent NRC or agreement state requirements. A preceptor authorized user who meets the requirements in 41.2(69) must have experience in administering dosages of either any beta emitter or any photon-emitting radionuclide with a photon energy less than 150 keV or at least three cases involving the parenteral administration of any other radionuclide for which a written directive is required.

[**ARC 7983B**, IAB 7/29/09, effective 9/2/09; **ARC 8982B**, IAB 8/11/10, effective 9/15/10; **ARC 0577C**, IAB 2/6/13, effective 3/13/13; **ARC 1639C**, IAB 10/1/14, effective 11/5/14]

641—41.3(136C) Therapeutic use of radiation machines.

41.3(1) Scope and applicability.

a. This subrule establishes requirements, for which the registrant is responsible, for use of therapeutic radiation machines.

b. The use of therapeutic radiation machines shall be by, or under the supervision of, a physician who meets the training/experience criteria established by 41.3(5).

c. Unless specifically required otherwise by 641—41.3(136C), all registrants are subject to the requirements of 641—Chapters 38 to 40.

41.3(2) Definitions. In addition to the definitions provided in 641—38.2(136C) and 641—40.2(136C), the following definitions are specific to 641—41.3(136C).

"Accessible surface" means surface of equipment or of an equipment part that can be easily or accidentally touched by persons without the use of a tool.

"Added filtration" means any filtration which is in addition to the inherent filtration.

"Beam-limiting device" means a field defining collimator, integral to the therapeutic radiation machine, which provides a means to restrict the dimensions of the useful beam.

"Beam-scattering foil" means a thin piece of material (usually metallic) placed in the beam to scatter a beam of electrons in order to provide a more uniform electron distribution in the useful beam.

"Bent beam linear accelerator" means a linear accelerator geometry in which the accelerated electron beam must change direction by passing through a bending magnet.

"Contact therapy system" means a therapeutic radiation machine with a short target-to-skin distance (TSD), usually less than 5 centimeters.

"Dose monitor unit (DMU)" means a unit response from the beam monitoring system from which the absorbed dose can be calculated.

"External beam radiation therapy" means therapeutic irradiation in which the source of radiation is at a distance from the body.

"Field flattening filter" means a filter used to homogenize the absorbed dose rate over the radiation field.

"Filter" means material placed in the useful beam to change beam quality or its intensity profile in therapeutic radiation machines.

"Gantry" means that part of a radiation therapy system supporting and allowing movements of the radiation head around a center of rotation.

"Interruption of irradiation" means the stopping of irradiation with the possibility of continuing irradiation without resetting of operating conditions at the control panel.

"Isocenter" means the center of the sphere through which the useful beam axis passes while the gantry moves through its full range of motions.

"Megavolt (MV) (mega electron volt (MeV))" means the energy equal to that acquired by a particle with one electron charge in passing through a potential difference of 1 million volts in a vacuum. (Note: Current convention is to use MV for photons and MeV for electrons.)

"Monitor unit (MU)." See "Dose monitor unit."

"Moving beam radiation therapy" means radiation therapy with continuous displacement of one or more mechanical axes relative to the patient during irradiation. It includes arc therapy, skip therapy, conformal therapy, intensity modulation, and rotational therapy.

"Nominal treatment distance" means:

1. For electron irradiation, the distance from the scattering foil, virtual source, or exit window of the electron beam to the entrance surface of the irradiated object along the central axis of the useful beam.

2. For X-ray irradiation, the virtual source or target to isocenter distance along the central axis of the useful beam. For nonisocentric equipment, this distance shall be that specified by the manufacturer.

"Periodic quality assurance check" means a procedure which is performed to ensure that a previous calibration continues to be valid.

"Practical range of electrons" corresponds to classical electron range where the only remaining contribution to dose is from bremsstrahlung X-rays. A further explanation may be found in "Clinical

Electron Beam Dosimetry: Report of AAPM Radiation Therapy Committee Task Group 25" (Medical Physics 18(1): 73-109, Jan/Feb 1991) and ICRU Report 35, "Radiation Dosimetry: Electron Beams with Energies Between 1 and 50 MeV," International Agency on Radiation Units and Measurements, September 15, 1984.

"Radiation field." See "Useful beam."

"Radiation head" means the structure from which the useful beam emerges.

"Radiation therapy physicist" means an individual qualified in accordance with 41.3(6).

"Redundant beam monitoring system" means a combination of two dose monitoring systems in which each system is designed to terminate irradiation in accordance with a preselected number of dose monitor units.

"Shadow tray" means a device attached to the radiation head to support auxiliary beam blocking material.

"Stationary beam radiation therapy" means radiation therapy without displacement of one or more mechanical axes relative to the patient during irradiation.

"Target" means that part of an X-ray tube or accelerator onto which is directed a beam of accelerated particles to produce ionizing radiation or other particles.

"Tenth-value layer (TVL)" means the thickness of a specified material which attenuates X-radiation or gamma radiation to an extent such that the air kerma rate, exposure rate or absorbed dose rate is reduced to one-tenth of the value measured without the material at the same point.

"Therapeutic radiation machine" means X-ray or electron-producing equipment designed and used for external beam radiation therapy.

"Virtual source" means a point from which radiation appears to originate.

41.3(3) Registration or license requirements. No person shall receive, possess, use, transfer, own, or acquire therapeutic radiation machines except as authorized in a registration issued pursuant to 641—39.1(136C) to 39.4(136C).

41.3(4) General administrative requirements for facilities using therapeutic radiation machines.

a. Administrative controls. The registrant shall be responsible for directing the operation of the therapeutic radiation machines which have been registered with the agency. The registrant or the registrant's agent shall ensure that the requirements of 41.3(136C) are met in the operation of the therapeutic radiation machine(s).

b. A therapeutic radiation machine which does not meet the provisions of these regulations shall not be used for irradiation of patients unless authorized by the agency.

41.3(5) Training for external beam radiation therapy authorized users. The registrant for any therapeutic radiation machine subject to 41.3(17) or 41.3(18) shall require the authorized user to be a physician who:

a. Is certified in:

(1) Radiology or therapeutic radiology by the American Board of Radiology; or

(2) Radiation oncology by the American Osteopathic Board of Radiology; or

(3) Radiology, with specialization in radiotherapy, as a British "Fellow of the Faculty of Radiology" or "Fellow of the Royal College of Radiology"; or

(4) Therapeutic radiology by the Canadian Royal College of Physicians and Surgeons; or

b. Is in the active practice of therapeutic radiology, and has completed 200 hours of instruction in basic radiation techniques applicable to the use of an external beam radiation therapy unit, 500 hours of supervised work experience, and a minimum of three years of supervised clinical experience.

c. To satisfy the requirement for instruction in 41.3(5)*"b"* above, the classroom and laboratory training shall include:

(1) Radiation physics and instrumentation;

(2) Radiation protection;

(3) Mathematics pertaining to the use and measurement of ionization radiation; and

(4) Radiation biology.

d. To satisfy the requirement for supervised work experience in 41.3(4)*"b"* above, training shall be under the supervision of an authorized user and shall include:

(1) Reviewing the full calibration measurements and periodic quality assurance checks;

(2) Evaluating prepared treatment plans and calculation of treatment times/patient treatment settings;

(3) Using administrative controls to prevent misadministrations;

(4) Implementing emergency procedures to be followed in the event of the abnormal operation of an external beam radiation therapy unit or console; and

(5) Checking and using radiation survey meters.

e. To satisfy the requirement for a period of supervised clinical experience, training shall include one year in a formal training program approved by the Residency Review Committee for Radiology of the Accreditation Council for Graduate Medical Education or the Committee on Postdoctoral Training of the American Osteopathic Association and an additional two years of clinical experience in therapeutic radiology under the supervision of an authorized user. The supervised clinical experience shall include:

(1) Examining individuals and reviewing their case histories to determine their suitability for external beam radiation therapy treatment, and any limitations/contraindications;

(2) Selecting proper dose and how it is to be administered;

(3) Calculating the external beam radiation therapy doses and collaborating with the authorized user in the review of patients' progress; consideration of the need to modify originally prescribed doses or treatment plans as warranted by patients' reaction to radiation; and

(4) Postadministration follow-up and review of case histories.

f. Notwithstanding the requirements of 41.3(5)*"b,"* the registrant for any therapeutic radiation machine subject to 41.3(17) and 41.3(18) may also submit the training of the prospective authorized user physician for agency review.

g. A physician shall not act as an authorized user for any therapeutic radiation machine until such time as said physician's training has been reviewed and approved by the registrant.

41.3(6) Training for radiation therapy physicist. The registrant for any therapeutic radiation machine subject to 41.3(17) or (18) shall require the radiation therapy physicist to:

a. Be registered with the agency, under the provisions of 641—subrule 39.3(3) of these regulations, as a provider of radiation services in the area of calibration and compliance surveys of external beam radiation therapy units; and

b. Be certified by the American Board of Radiology in:

(1) Therapeutic radiological physics; or

(2) Roentgen-ray and gamma-ray physics; or

(3) X-ray and radium physics; or

(4) Radiological physics; or

(5) Therapeutic medical physics; or

c. Be certified by the American Board of Medical Physics in radiation oncology physics; or

d. Be certified by the Canadian College of Physicists in Medicine; or

e. Hold a master's or doctor's degree in physics, biophysics, radiological physics, or health physics, and have completed one year of full-time training in therapeutic radiological physics and also one year of full-time work experience under the supervision of a radiation therapy physicist at a medical institution. To meet this requirement, the individual shall have performed the tasks listed in 41.3(16)*"a,"*41.3(17)*"c"* and *"d,"* and 41.3(18)*"e"* and *"f"* under the supervision of a radiation therapy physicist during the year of work experience.

f. Rescinded IAB 4/3/02, effective 5/8/02.

41.3(7) Qualifications of operators. Individuals who will be operating a therapeutic radiation machine for medical use shall be adequately instructed in the safe operating procedures and hold a current permit to practice in radiation therapy as a radiation therapist under the provisions of 641—Chapter 42. The permit holder shall make the permit available at the individual's place of employment. If the permit holder works at more than one facility, a duplicate of the permit shall be kept at each facility.

41.3(8) Written safety procedures and rules shall be developed by a radiation therapy physicist and shall be available in the control area of a therapeutic radiation machine, including any restrictions

required for the safe operation of the particular therapeutic radiation machine. The operator shall be able to demonstrate familiarity with these rules. All individuals associated with the operation of a therapeutic radiation machine shall be instructed in and shall comply with procedures for maintaining written directives.

41.3(9) Individuals shall not be exposed to the useful beam except for medical therapy purposes and unless such exposure has been ordered in writing by a physician. This provision specifically prohibits deliberate exposure of an individual for training, demonstration or other non-healing arts purposes.

41.3(10) Records of visiting authorized users. Notwithstanding the provisions of 41.3(5), a registrant may permit any physician to act as a visiting authorized user for up to 60 days per calendar year under the following conditions:

a. The visiting authorized user has the prior written permission of the registrant's management and, if the use occurs on behalf of an institution, the institution's radiation safety committee;

b. The visiting authorized user meets the requirements of 41.3(5); and

c. The registrant maintains copies of all records specified in 41.3(5) for five years from the date of the last visit.

41.3(11) Information and maintenance record and associated information. The registrant shall maintain the following information in a separate file or package for each therapeutic radiation machine for inspection by the agency:

a. Report of acceptance testing;

b. Records of all surveys, calibrations, and periodic quality assurance checks of the therapeutic radiation machine required by 41.3(136C), as well as the name(s) of person(s) who performed such activities;

c. Records of maintenance or modifications, or both, performed on the therapeutic radiation machine after July 9, 1997, as well as the name(s) of person(s) who performed such services;

d. Signature of person authorizing the return of therapeutic radiation machine to clinical use after service, repair, or upgrade.

e. Records of training specified in 41.3(5) and 41.3(6).

41.3(12) Records retention. All records required by 641—41.3(136C) shall be retained until disposal is authorized by the agency unless another retention period is specifically authorized in 41.3(136C). All required records shall be retained in an active file from at least the time of generation until the next agency inspection. Any required record generated before the last agency inspection may be microfilmed or otherwise archived as long as a complete copy can be retrieved until such time the agency authorizes final disposal.

41.3(13) Form of records. Rescinded IAB 4/5/00, effective 5/10/00.

41.3(14) Written directives. Each registrant shall meet the following:

a. A written directive must be dated and signed by an authorized user prior to the administration of radiation.

(1) If, because of the patient's condition, a delay in the order to provide a written revision to an existing directive would jeopardize the patient's health, an oral revision to an existing written directive will be acceptable, provided that the oral revision is documented as soon as possible in writing in the patient's record and a revised written directive is signed by an authorized user within 48 hours of the oral revision.

(2) The written directive must contain the patient or human research subject's name, the type and energy of the beam, the total dose, dose per fraction, treatment site, and number of fractions.

(3) A written revision to an existing written directive may be made provided that the revision is dated and signed by an authorized user prior to the administration of the external beam dose, or the next fractional dose.

(4) The registrant shall retain a copy of the written directive for three years.

b. Procedures for administration. The registrant shall have written procedures that provide the following information:

(1) Prior to the administration of each course of radiation treatment, the patient's or human research subject's identity is verified by more than one method as the individual named in the written directive;

(2) Each administration is in accordance with the written directive;

(3) External beam radiation therapy final plans of treatment and related calculations are in accordance with the respective written directives by:

1. Checking both manual and computer-generated dose calculations to verify that they are correct and in accordance with the written directive; and

2. Verifying that any computer-generated calculations are correctly transferred into the consoles of authorized therapeutic medical units;

(4) Any unintended deviation from the written directive is identified, evaluated and appropriate action is taken; and

(5) The registrant retains a copy of the procedures for administrations for the duration of the registration.

41.3(15) Reports and notifications of misadministrations.

a. A registrant shall report any event resulting from intervention of a patient or human research subject in which the administration of external beam radiation results, or will result, in unintended permanent functional damage to an organ or a physiological system as determined by a physician.

b. Other than events that result from intervention by a patient or human research subject, a registrant shall report any event in which the administration of an external beam radiation therapy dose results in:

(1) A dose that differs from the prescribed dose by more than 5 rem (0.05 sievert) effective dose equivalent, 50 rem (0.5 sievert) to an organ or tissue, or 50 rem (0.5 sievert) shallow dose equivalent to the skin, and either:

1. The total dose delivered differs from the prescribed dose by 20 percent or more; or

2. The fractionated dose delivered differs from the prescribed dose for a single fraction by 50 percent or more.

(2) A dose that exceeds 5 rem (0.05 sievert) effective dose equivalent, 50 rem (0.5 sievert) to an organ or tissue, or 50 rem (0.5 sievert) shallow dose equivalent to the skin from either of the following:

1. An administration of the wrong treatment modality;

2. An administration to the wrong individual or human research subject.

(3) A dose to the skin or an organ or tissue other than the treatment site that exceeds by 50 rem (0.5 sievert) to an organ or tissue and 50 percent or more of the dose expected from the administration defined in the written directive.

c. The registrant shall notify the agency by telephone no later than the next calendar day after the discovery of a misadministration.

d. The registrant shall submit a written report to the agency within 15 days after the discovery of a misadministration. The written report shall include:

(1) The registrant's name;

(2) The name of the prescribing physician;

(3) A brief description of the event;

(4) Why the event occurred;

(5) The effect, if any, on the individual or individuals who received the misadministration;

(6) Actions, if any, that have been taken, or are planned, to prevent recurrence;

(7) Certification that the registrant notified the individual or the individual's responsible relative or guardian, and if not, why not.

e. The report to the agency shall not contain the individual's name or any other information that could lead to the identification of the individual.

f. The registrant shall provide notification of the event to the referring physician and also notify the individual who is the subject of the misadministration no later than 24 hours after its discovery, unless the referring physician personally informs the registrant either that the referring physician will inform the individual or that, based on medical judgment, the physician's telling the individual would be harmful. The registrant is not required to notify the individual without first consulting the referring physician. If the referring physician or the affected individual cannot be reached within 24 hours, the registrant shall notify the individual as soon as possible thereafter. The registrant may not delay any

appropriate medical care for the individual, including any necessary remedial care as a result of the misadministration, because of any delay in notification. To meet the requirements of this paragraph, the notification of the individual who is the subject of the misadministration may be made instead to that individual's responsible relative or guardian. If a verbal notification is made, the registrant shall inform the individual, or appropriate responsible relative or guardian, that a written description of the event may be obtained from the registrant upon request. The registrant shall provide such a written description if requested.

g. Aside from the notification requirement, nothing in this subrule affects any rights or duties of registrants and physicians in relation to each other, to individuals affected by the misadministration, or to individuals' responsible relatives or guardians.

h. A copy of the record required in this subrule shall be provided to the referring physician, if other than the registrant, within 15 days after discovery of the misadministration.

i. Records of misadministrations. A registrant shall retain a record of misadministrations reported in this subrule for three years. The record must contain the following:

(1) The registrant's name and the names of the individuals involved;

(2) The social security number or other identification number, if one has been assigned, of the individual who is the subject of the misadministration;

(3) A brief description of the event; why it occurred; and the effect, if any, on the individual;

(4) The actions, if any, taken or planned to prevent recurrence; and

(5) Whether the registrant notified the individual or the individual's responsible relative or guardian, and, if not, whether such failure to notify was based on guidance from the referring physician.

41.3(16) General technical requirements for facilities using therapeutic radiation machines.

a. Protection surveys.

(1) The registrant shall ensure that radiation protection surveys of all new facilities, and existing facilities not previously surveyed, are performed with an operable radiation measurement survey instrument calibrated within the past 12 months. The radiation protection survey shall be performed by, or under the direction of, a radiation therapy physicist or a certified health physicist and shall verify that, with the therapeutic radiation machine in a "BEAM-ON" condition, with the largest clinically available treatment field and with a scattering phantom in the useful beam of radiation:

1. Radiation levels in restricted areas are not likely to cause personnel exposures in excess of the limits specified in 641—subrule 40.15(1); and

2. Radiation levels in unrestricted areas do not exceed the limits specified in 641—paragraphs 40.26(1)*"a"* and *"b."*

(2) In addition to the requirements of 41.3(16)*"a"*(1), a radiation protection survey shall also be performed prior to any subsequent medical use and:

1. After making any change in the treatment room shielding;

2. After making any change in the location of the therapeutic radiation machine within the treatment room;

3. After relocating the therapeutic radiation machine; or

4. Before using the therapeutic radiation machine in a manner that could result in increased radiation levels in areas outside the external beam radiation therapy treatment room.

(3) The survey record shall indicate all instances where the facility, in the opinion of the radiation therapy physicist or a certified health physicist, is in violation of applicable regulations. The survey record shall also include the date of the measurements, the reason the survey is required, the manufacturer's name, model number and serial number of the therapeutic radiation machine, the instrument(s) used to measure radiation levels, a plan of the areas surrounding the treatment room that were surveyed, the measured dose rate at several points in each area expressed in microsieverts or millirems per hour, the calculated maximum level of radiation over a period of one week for each restricted and unrestricted area, and the signature of the individual responsible for conducting the survey.

(4) If the results of the surveys required by 41.3(16)*"a"*(1) or (2) indicate any radiation levels in excess of the respective limit specified in 41.3(16)*"a"*(1), the registrant shall lock the control in the "OFF" position and not use the unit:

1. Except as may be necessary to repair, replace, or test the therapeutic radiation machine, the therapeutic radiation machine shielding, or the treatment room shielding; or

2. Until the registrant has received a specific exemption in writing from the agency.

b. Modification of radiation therapy unit or room before beginning a treatment program. If the survey required by 41.3(16)*"a"* indicates that an individual in an unrestricted area may be exposed to levels of radiation greater than those permitted by 641—paragraphs 40.26(1)*"a"* and *"b,"* before beginning the treatment program the registrant shall:

(1) Either equip the unit with beam direction interlocks or add additional radiation shielding to ensure compliance with 641—paragraphs 40.26(1)*"a"* and *"b"*;

(2) Perform the survey required by 41.3(16)*"a"* again; and

(3) Include in the report required by 41.3(16)*"d"* the results of the initial survey, a description of the modification made to comply with 41.3(5)*"b"*(1), and the results of the second survey; or

(4) Request and receive written authorization from the agency that authorizes radiation levels in unrestricted areas greater than those permitted by 641—paragraphs 40.26(1)*"a"* and *"b."*

c. Dosimetry equipment.

(1) The registrant shall have a calibrated dosimetry system available for use. The system shall have been calibrated by the National Institute for Standards and Technology (NIST) or by an American Association of Physicists in Medicine (AAPM) Accredited Dosimetry Calibration Laboratory (ADCL). The calibration shall have been performed within the previous 24 months and after any servicing that may have affected system calibration.

1. For beams with energies greater than 1 MV (1 MeV), the dosimetry system shall have been calibrated for Cobalt-60.

2. For beams with energies equal to or less than 1 MV (1 MeV), the dosimetry system shall have been calibrated at an energy (energy range) appropriate for the radiation being measured.

(2) The registrant shall have available for use a dosimetry system for quality assurance check measurements. To meet this requirement, the system may be compared with a system that has been calibrated in accordance with 41.3(16)*"c"*(1). This comparison shall have been performed within the previous 12 months and after each servicing that may have affected system calibration. The quality assurance check system may be the same system used to meet the requirement in 41.3(16)*"c"*(1).

(3) The registrant shall maintain a record of each dosimetry system calibration, intercomparison, and comparison for the duration of the license or registration. For each calibration, intercomparison, or comparison, the record shall include the date, the model numbers and serial numbers of the instruments that were calibrated, intercompared, or compared as required by 41.3(16)*"c"*(1) and (2), the correction factors that were determined, the names of the individuals who performed the calibration, intercomparison, or comparison, and evidence that the intercomparison was performed by, or under the direct supervision and in the physical presence of, a radiation therapy physicist.

d. Reports of external beam radiation therapy surveys and measurements. The registrant for any therapeutic radiation machine subject to 41.3(17) or 41.3(18) shall furnish a copy of the records required in 41.3(16)*"a"* and *"b"* to the agency within 30 days following completion of the action that initiated the record requirement.

41.3(17) Therapeutic radiation machines of less than 500 kV.

a. Equipment requirements.

(1) Leakage radiation. When the X-ray tube is operated at its maximum rated tube current for the maximum kV, the leakage air kerma rate shall not exceed the value specified at the distance specified for that classification of therapeutic radiation machine:

1. 5-50 kV systems. The leakage air kerma rate measured at any position 5 centimeters from the tube housing assembly shall not exceed 100 mrad (1 mGy) in any one hour.

2. >50 and <500 kV systems. The leakage air kerma rate measured at a distance of one meter from the target in any direction shall not exceed 1 rad (1 cGy) in any one hour. This air kerma rate

measurement may be averaged over areas no larger than 100 square centimeters. In addition, the air kerma rate at a distance of 5 centimeters from the surface of the tube housing assembly shall not exceed 30 rad (30 cGy) per hour.

3. For each therapeutic machine, the registrant shall determine, or obtain from the manufacturer, the leakage radiation existing at positions specified in 41.3(17)*"a"*(1)"1" and 41.3(17)*"a"*(1)"2" for the specified operating conditions. Records on leakage radiation measurements shall be maintained at the facility for inspection by the agency.

(2) Permanent beam-limiting devices. Permanent diaphragms or cones used for limiting the useful beam shall provide at least the same degree of attenuation as required for the tube housing assembly.

(3) Adjustable or removable beam-limiting devices.

1. All adjustable or removable beam-limiting devices, diaphragms, cones or blocks shall not transmit more than 5 percent of the useful beam for the most penetrating beam used;

2. When adjustable beam-limiting devices are used, the position and shape of the radiation field shall be indicated by a light beam.

(4) Filter system. The filter system shall be so designed that:

1. Filters cannot be accidentally displaced at any possible tube orientation;

2. For equipment installed after July 9, 1997, an interlock system prevents irradiation if the proper filter is not in place;

3. The air kerma rate escaping from the filter slot shall not exceed 1 rad (1 cGy) per hour at one meter under any operating conditions; and

4. Each filter shall be marked as to its material of construction and its thickness.

(5) Tube immobilization.

1. The X-ray tube shall be so mounted that it cannot accidentally turn or slide with respect to the housing aperture; and

2. The tube housing assembly shall be capable of being immobilized for stationary portal treatments.

(6) Source marking. The tube housing assembly shall be so marked that it is possible to determine the location of the source to within 5 millimeters, and such marking shall be readily accessible for use during calibration procedures.

(7) Beam block. Contact therapy tube housing assemblies shall have a removable shield of material, equivalent in attenuation to 0.5 millimeters of lead at 100 kV, which can be positioned over the entire useful beam exit port during periods when the beam is not in use.

(8) Timer. A suitable irradiation control device shall be provided to terminate the irradiation after a preset time interval.

1. A timer which has a display shall be provided at the treatment control panel. The timer shall have a preset time selector and an elapsed time or time remaining indicator;

2. The timer shall be a cumulative timer which activates with an indication of "BEAM-ON" and retains its reading after irradiation is interrupted or terminated. After irradiation is terminated and before irradiation can be reinitiated, it shall be necessary to reset the elapsed time indicator;

3. The timer shall terminate irradiation when a preselected time has elapsed, if any dose monitoring system present has not previously terminated irradiation;

4. The timer shall permit accurate presetting and determination of exposure times as short as one second;

5. The timer shall not permit an exposure if set at zero;

6. The timer shall not activate until the shutter is opened when irradiation is controlled by a shutter mechanism unless calibration includes a timer error correction to compensate for mechanical lag; and

7. Timer shall be accurate to within 1 percent of the selected value or one second, whichever is greater.

(9) Control panel functions. The control panel, in addition to the displays required by other provisions in 41.3(6), shall have:

1. An indication of whether electrical power is available at the control panel and if activation of the X-ray tube is possible;

2. An indication of whether X-rays are being produced;
3. Means for indicating X-ray tube potential and current;
4. The means for terminating an exposure at any time;
5. A locking device which will prevent unauthorized use of the therapeutic radiation machine; and
6. For therapeutic radiation machines manufactured after July 9, 1997, a positive display of specific filter(s) in the beam.

(10) Multiple tubes. When a control panel may energize more than one X-ray tube:
1. It shall be possible to activate only one X-ray tube at any time;
2. There shall be an indication at the control panel identifying which X-ray tube is activated; and
3. There shall be an indication at the tube housing assembly when that tube is energized.

(11) Target-to-skin distance (TSD). There shall be a means of determining the central axis TSD to within one centimeter and of reproducing this measurement to within two millimeters thereafter.

(12) Shutters. Unless it is possible to bring the X-ray output to the prescribed exposure parameters within five seconds after the X-ray "ON" switch is energized, the beam shall be attenuated by a shutter(s) having a lead equivalency not less than that of the tube housing assembly. In addition, after the unit is at operating parameters, the shutter(s) shall be controlled by the operator from the control panel. An indication of shutter position shall appear at the control panel.

(13) Low filtration X-ray tubes. Each therapeutic radiation machine equipped with a beryllium or other low-filtration window shall be clearly labeled as such upon the tube housing assembly and shall be provided with a permanent warning device on the control panel that is activated when no additional filtration is present, to indicate that the dose rate is very high.

b. Facility design requirements for therapeutic radiation machines capable of operating in the range 50 kV to 500 kV. In addition to shielding adequate to meet requirements of 41.3(19), the treatment room shall meet the following design requirements:

(1) Aural communication. Provision shall be made for continuous two-way aural communication between the patient and the operator at the control panel.

(2) Viewing systems. Provision shall be made to permit continuous observation of the patient during irradiation and the viewing system shall be so located that the operator can observe the patient from the control panel. The therapeutic radiation machine shall not be used for patient irradiation unless at least one viewing system is operational.

(3) Additional requirements. Treatment rooms which contain a therapeutic radiation machine capable of operating above 150 kV shall meet the following additional requirements:
1. All protective barriers shall be fixed except for entrance doors or beam interceptors;
2. The control panel shall be located outside the treatment room or in a totally enclosed booth, which has a ceiling, inside the room;
3. Interlocks shall be provided such that all entrance doors, including doors to any interior booths, shall be closed before treatment can be initiated or continued. If the radiation beam is interrupted by any door opening, it shall not be possible to restore the machine to operation without closing the door and reinitiating irradiation by manual action at the control panel; and
4. When any door referred to in 41.3(17)*"b"*(3)"3" is opened while the radiation machine is activated, the air kerma rate at a distance of one meter from the source shall be reduced to less than 1 mGy (100 mrad) per hour.

c. Full calibration measurements.

(1) Full calibration of a therapeutic radiation machine subject to 41.3(17) shall be performed by, or under the direct supervision of, a radiation therapy physicist:
1. Before the first medical use following installation or reinstallation of the therapeutic radiation machine;
2. At intervals not exceeding one year; and
3. Before medical use under the following conditions:

- Whenever quality assurance check measurements indicate that the radiation output differs by more than 5 percent from the value obtained at the last full calibration and the difference cannot be reconciled; and

- Following any component replacement, major repair, or modification of components that could significantly affect the characteristics of the radiation beam.

4. Notwithstanding the requirements of 41.3(17)*"c"*(1):

- Full calibration of therapeutic radiation machines with multienergy capabilities is required only for those modes or energies that are not within their acceptable range; and
- If the repair, replacement or modification does not affect all energies, full calibration shall be performed on the affected energy that is in most frequent clinical use at the facility. The remaining energies may be validated with quality assurance check procedures against the criteria in 41.3(17)*"b"*(3).

(2) To satisfy the requirement of 41.3(17)*"c"*(1), full calibration shall include all measurements recommended for annual calibration by NCRP Report 69, "Dosimetry of X-ray and Gamma Ray Beams for Radiation Therapy in the Energy Range 10 keV to 50 MeV" (1981).

(3) The registrant shall maintain a record of each calibration for the duration of the registration. The record shall include the date of the calibration, the manufacturer's name, model number, and serial number for both the therapeutic radiation machine and the X-ray tube, the model numbers and serial numbers of the instruments used to calibrate the therapeutic radiation machine, and the signature of the radiation therapy physicist responsible for performing the calibration.

d. Periodic quality assurance checks.

(1) Periodic quality assurance checks shall be performed on therapeutic radiation machines, subject to 41.3(17), which are capable of operation at greater than or equal to 50 kV.

(2) To satisfy the requirement of 41.3(17)*"d"*(1), quality assurance checks shall meet the following requirements:

1. The registrant shall perform quality assurance checks in accordance with written procedures established by the radiation therapy physicist; and

2. The quality assurance check procedures shall specify the frequency at which tests or measurements are to be performed. The quality assurance check procedures shall specify that the quality assurance check shall be performed during the calibration specified in 41.3(17)*"c"*(1). The acceptable tolerance for each parameter measured in the quality assurance check, when compared to the value for that parameter determined in the calibration specified in 41.3(17)*"c"*(1), shall be stated.

(3) The cause for a parameter exceeding a tolerance set by the radiation therapy physicist shall be investigated and corrected before the system is used for patient or human research subject irradiation;

(4) Whenever a quality assurance check indicates a significant change in the operating characteristics of a system, as specified in the radiation therapy physicist's quality assurance check procedures, the system shall be recalibrated as required in 41.3(17)*"c"*(1);

(5) The registrant shall use the dosimetry system described in 41.3(16)*"c"*(2) to make the quality assurance check required in 41.3(17)*"d"*;

(6) The registrant shall have the radiation therapy physicist review and sign the results of each radiation output quality assurance check within one month of test completion;

(7) The registrant shall ensure that safety quality assurance checks of therapeutic radiation machines subject to 41.3(17) are performed at intervals not to exceed one month;

(8) Notwithstanding the requirements of 41.3(17)*"d"*(6) and (7), the registrant shall ensure that no therapeutic radiation machine is used to administer radiation to humans unless the quality assurance checks required by 41.3(17)*"d"*(6) and (7) have been performed within the 30 days prior to administration;

(9) To satisfy the requirement of 41.3(17)*"d"*(7), safety quality assurance checks shall ensure proper operation of:

1. Electrical interlocks at each external beam radiation therapy room entrance;

2. The "BEAM-ON" and termination switches;

3. Beam condition indicator lights on the access door(s), control console, and in the radiation therapy room;

4. Viewing systems;

5. If applicable, electrically operated treatment room doors from inside and outside the treatment room.

(10) The registrant shall maintain a record of each quality assurance check required by 41.3(17)*"d"*(1) and (7) for three years. The record shall include the date of the quality assurance check, the manufacturer's name, model number, and serial number for the therapeutic radiation machine, the manufacturer's name, model number and serial number of the instrument(s) used to measure the radiation output of the therapeutic radiation machine, and the signature of the individual who performed the periodic quality assurance check.

e. Operating procedures.

(1) Therapeutic radiation machines shall not be left unattended unless secured by means identified in 41.3(17)*"a"*(9)"5";

(2) When a patient must be held in position for radiation therapy, mechanical supporting or restraining devices shall be used;

(3) The tube housing assembly shall not be held by an individual during operation unless the assembly is designed to require such holding and the peak tube potential of the system does not exceed 50 kV. In such cases, the holder shall wear protective gloves and apron of not less than 0.5 millimeters lead equivalency at 100 kV;

(4) A copy of the current operating and emergency procedures shall be maintained at the therapeutic radiation machine control console; and

(5) No individual other than the patient shall be in the treatment room during exposures from therapeutic radiation machines operating above 150 kV. At energies less than or equal to 150 kV, any individual, other than the patient, in the treatment room shall be protected by a barrier sufficient to meet the requirements of 641—40.26(136C).

(6) The therapeutic radiation machine shall not be used for irradiation of patients unless the requirements of 41.3(17)*"c"* and *"d"* have been met.

f. Possession of survey instrument(s). Each facility location authorized to use a therapeutic radiation machine in accordance with 41.3(17) shall have at its disposal appropriately calibrated portable monitoring equipment. As a minimum, such equipment shall include a portable radiation measurement survey instrument capable of measuring dose rates over the range 1 mrem (10 μSv) per hour to 1000 mrem (10 mSv) per hour. The survey instrument(s) shall be operable and calibrated at intervals not to exceed 12 months for the radiation measured.

41.3(18) Therapeutic radiation machines—photon therapy systems (500 kV and above) and electron therapy systems (500 keV and above).

a. Equipment requirements.

(1) Leakage radiation outside the maximum useful beam in photon and electron modes.

1. The absorbed dose due to leakage radiation (excluding neutrons) at any point outside the maximum-sized useful beam, but within a circular plane of radius two meters which is perpendicular to and centered on the central axis of the useful beam at the nominal treatment distance (i.e., patient plane), shall not exceed a maximum of 0.2 percent and an average of 0.1 percent of the absorbed dose on the central axis of the beam at the nominal treatment distance. Measurements shall be averaged over an area not exceeding 100 square centimeters at a minimum of 16 points uniformly distributed in the plane;

2. Except for the area defined in 41.3(18)*"a"*(1)"1," the absorbed dose due to leakage radiation (excluding neutrons) at one meter from the electron path between the electron source and the target or electron window shall not exceed 0.5 percent of the absorbed dose on the central axis of the beam at the nominal treatment distance. Measurements shall be averaged over an area not exceeding 100 square centimeters;

3. For equipment manufactured after July 9, 1997, the neutron absorbed dose outside the useful beam shall be in compliance with International Electrotechnical Agency (IEC) Document 601-2-1 (most current revision); and

4. For each therapeutic radiation machine, the registrant shall determine, or obtain from the manufacturer, the leakage radiation existing at the positions specified in 41.3(18)*"a"*(1)"1" to "3" for the specified operating conditions. Records of leakage radiation measurements shall be maintained for inspection by the agency.

(2) Leakage radiation through beam-limiting devices.

1. Photon radiation. All adjustable or interchangeable beam-limiting devices shall attenuate the useful beam such that at the nominal treatment distance, the maximum absorbed dose anywhere in the area shielded by the beam-limiting device(s) shall not exceed 2 percent of the maximum absorbed dose on the central axis of the useful beam measured in a 10-centimeter by 10-centimeter radiation field;

2. Electron radiation. All adjustable or interchangeable electron applicators shall attenuate the radiation including, but not limited to, photon radiation generated by electrons incident on the beam-limiting device and electron applicator and other parts of the radiation head, such that the absorbed dose in a plane perpendicular to the central axis of the useful beam at the nominal treatment distance shall not exceed:

- A maximum of 2 percent and average of 0.5 percent of the absorbed dose on the central axis of the useful beam at the nominal treatment distance. This limit shall apply beyond a line seven centimeters outside the periphery of the useful beam; and
- A maximum of 10 percent of the absorbed dose on the central axis of the useful beam at the nominal treatment distance. This limit shall apply beyond a line two centimeters outside the periphery of the useful beam.

(3) Measurement of leakage radiation.

1. Photon radiation. Measurements of leakage radiation through the beam-limiting devices shall be made with the beam-limiting devices closed and any residual aperture blocked by at least two-tenth value layers of suitable absorbing material. In the case of overlapping beam-limiting devices, the leakage radiation through each set shall be measured independently at the depth of maximum dose. Measurements shall be made using a radiation detector with an area not exceeding ten square centimeters;

2. Electron radiation. Measurements of leakage radiation through the electron applicators shall be made with the electron beam directed into the air and using a radiation detector with an area up to but not exceeding one square centimeter suitably protected against radiation which has been scattered from material beyond the radiation detector. Measurements shall be made using one centimeter of water equivalent buildup material.

(4) Filters/wedges.

1. Each wedge filter which is removable from the system shall be clearly marked with an identification number. For removable wedge filters, the nominal wedge angle shall appear on the wedge or wedge tray (if permanently mounted to the tray). If the wedge or wedge tray is significantly damaged, the wedge transmission factor shall be redetermined;

2. If the absorbed dose rate information required by 41.3(18)*"a"*(9) relates exclusively to operation with a field-flattening filter or beam-scattering foil in place, such filter or foil shall be removable only by the use of tools;

3. For equipment manufactured after July 9, 1997, which utilizes a system of wedge filters, interchangeable field-flattening filters, or interchangeable beam-scattering foils:

- Irradiation shall not be possible until a selection of a filter or a positive selection to use "no filter" has been made at the treatment control panel, either manually or automatically;
- An interlock system shall be provided to prevent irradiation if the filter selected is not in the correct position;
- A display shall be provided at the treatment control panel showing the wedge filter(s), interchangeable field-flattening filter(s), and interchangeable beam-scattering foil(s) in use; and
- An interlock shall be provided to prevent irradiation if any filter or beam-scattering foil selection operation carried out in the treatment room does not agree with the filter or beam-scattering foil selection operation carried out at the treatment control panel.

(5) Stray radiation in the useful beam. For equipment manufactured after July 9, 1997, the registrant shall determine during acceptance testing, or obtain from the manufacturer, data sufficient to ensure that X-ray stray radiation in the useful electron beam, absorbed dose at the surface during X-ray irradiation and stray neutron radiation in the useful X-ray beam are in compliance with International Electrotechnical Agency (IEC) Document 601-2-1 (most current revision).

(6) Beam monitors. All therapeutic radiation machines subject to 41.3(18) shall be provided with redundant beam monitoring systems. The sensors for these systems shall be fixed in the useful beam during treatment to indicate the dose monitor unit rate.

1. Equipment manufactured after July 9, 1997, shall be provided with at least two independently powered integrating dose meters. Alternatively, common elements may be used if the production of radiation is terminated upon failure of any common element.

2. Equipment manufactured on or before July 9, 1997, shall be provided with at least one radiation detector. This detector shall be incorporated into a useful beam monitoring system. The detector and the system into which that detector is incorporated shall meet the following requirements:

- Each detector shall be removable only with tools and, if movable, shall be interlocked to prevent incorrect positioning;
- Each detector shall form part of a beam monitoring system from whose readings in dose monitor units the absorbed dose at a reference point can be calculated;
- Each beam monitoring system shall be capable of independently monitoring, interrupting, and terminating irradiation; and

3. For equipment manufactured after July 9, 1997, the design of the beam monitoring systems shall ensure that the:

- Malfunctioning of one system shall not affect the correct functioning of the other system(s); and
- Failure of any element common to both systems which could affect the correct function of both systems shall terminate irradiation or prevent the initiation of radiation.

4. Each beam monitoring system shall have a legible display at the treatment control panel. For equipment manufactured after July 9, 1997, each display shall:

- Maintain a reading until intentionally reset;
- Have only one scale and no electrical or mechanical scale multiplying factors;
- Utilize a design such that increasing dose is displayed by increasing numbers; and
- In the event of power failure, the beam monitoring information required in 41.3(18)*"a"*(6)"4" displayed at the control panel at the time of failure shall be retrievable in at least one system for a 20-minute period of time.

(7) Beam symmetry.

1. Bent-beam linear accelerators with beam-flattening filter(s) subject to 41.3(18) shall be provided with auxiliary device(s) to monitor beam symmetry;

2. The device(s) referenced in 41.3(18)*"a"*(7)"1" shall be able to detect field asymmetry greater than 10 percent, and shall be configured to terminate irradiation if field asymmetry cannot be maintained at 10 percent or less.

(8) Selection and display of dose monitor units.

1. The preselected number of dose monitor units shall be displayed at the treatment control panel until reset manually;

2. After termination of irradiation, it shall be necessary to reset the dosimeter display before subsequent treatment can be initiated; and

3. For equipment manufactured after July 9, 1997, after termination of irradiation, it shall be necessary for the operator to reset the preselected dose monitor units before irradiation can be initiated.

4. Irradiation shall not be possible until a new selection of a number of dose monitor units has been made at the treatment control panel.

(9) Air kerma rate/absorbed dose rate. For equipment manufactured after July 9, 1997, a system shall be provided from whose readings the air kerma rate or absorbed dose rate at a reference point can be calculated. (The radiation detectors specified in 41.3(18)*"a"*(6) may form part of this system.) In addition:

1. The dose monitor unit rate shall be displayed at the treatment control panel;

2. If the equipment can deliver under any conditions an air kerma rate or absorbed dose rate at the nominal treatment distance more than twice the maximum value specified by the manufacturer, a device shall be provided which terminates irradiation when the air kerma rate or absorbed dose rate exceeds a

value twice the specified maximum. The dose rate at which the irradiation will be terminated shall be a record maintained by the registrant;

3. If the equipment can deliver under any fault condition(s) an air kerma rate or absorbed dose rate at the nominal treatment distance more than ten times the maximum value specified by the manufacturer, a device shall be provided to prevent the air kerma rate or absorbed dose rate anywhere in the radiation field from exceeding twice the specified maximum value and to terminate irradiation if the excess absorbed dose at the nominal treatment distance exceeds 400 rad (4 Gy); and

4. For each therapeutic radiation machine, the registrant shall determine, or obtain from the manufacturer, the maximum value(s) specified in 41.3(18)*"a"*(7)"2" and "3" for the specified operating conditions. Records of these maximum value(s) shall be maintained at the installation for inspection by the agency.

(10) Termination of irradiation by the beam monitoring system or systems during stationary beam radiation therapy.

1. Each primary system shall terminate irradiation when the preselected number of dose monitor units has been detected by the system;

2. If the original design of the equipment included a secondary dose monitoring system, that system shall be capable of terminating irradiation when not more than 15 percent or 40 dose monitor units above the preselected number of dose monitor units set at the control panel has been detected by the secondary dose monitoring system; and

3. For equipment manufactured after July 9, 1997, an indicator on the control panel shall show which monitoring system has terminated irradiation.

(11) Termination switches. It shall be possible to terminate irradiation and equipment movement or go from an interruption condition to termination condition at any time from the operator's position at the treatment control panel.

(12) Interruption switches. If a therapeutic radiation machine has an interrupt mode, it shall be possible to interrupt irradiation and equipment movements at any time from the treatment control panel. Following an interruption it shall be possible to restart irradiation by operator action without any reselection of operating conditions. If any change of a preselected value is made during an interruption, irradiation and equipment movements shall be automatically terminated.

(13) Timer. A suitable irradiation control device shall be provided to terminate the irradiation after a preset time interval.

1. A timer shall be provided which has a display at the treatment control panel. The timer shall have a preset time selector and an elapsed time indicator;

2. The timer shall be a cumulative timer which activates with an indication of "BEAM-ON" and retains its reading after irradiation is interrupted or terminated. After irradiation is terminated and before irradiation can be reinitiated, it shall be necessary to reset the elapsed time indicator;

3. The timer shall terminate irradiation when a preselected time has elapsed, if the dose monitoring systems have not previously terminated irradiation.

(14) Selection of radiation type. Equipment capable of both X-ray therapy and electron therapy shall meet the following additional requirements:

1. Irradiation shall not be possible until a selection of radiation type (X-rays or electrons) has been made at the treatment control panel;

2. The radiation type selected shall be displayed at the treatment control panel before and during irradiation;

3. An interlock system shall be provided to ensure that the equipment can principally emit only the radiation type which has been selected;

4. An interlock system shall be provided to prevent irradiation with X-rays, except to obtain a verification image, when electron applicators are fitted;

5. An interlock system shall be provided to prevent irradiation with electrons when accessories specific for X-ray therapy are fitted; and

6. An interlock system shall be provided to prevent irradiation if any selected operations carried out in the treatment room do not agree with the selected operations carried out at the treatment control panel.

(15) Selection of energy. Equipment capable of generating radiation beams of different energies shall meet the following requirements:

1. Irradiation shall not be possible until a selection of energy has been made at the treatment control panel;

2. The nominal energy value selected shall be displayed at the treatment control panel until reset manually for the next irradiation. After termination of irradiation, it shall be necessary to reset the nominal energy value selected before subsequent treatment can be initiated; and

3. Irradiation shall not be possible until the appropriate flattening filter or scattering foil for the selected energy is in its proper location.

4. For equipment manufactured after July 9, 1997, the selection of energy shall be in compliance with International Electrotechnical Commission (IEC) Document 60601-2-1.

(16) Selection of stationary beam radiation therapy or moving beam radiation therapy. Therapeutic radiation machines capable of both stationary beam radiation therapy and moving beam radiation therapy shall meet the following requirements:

1. Irradiation shall not be possible until a selection of stationary beam radiation therapy or moving beam radiation therapy has been made at the treatment control panel;

2. The mode of operation shall be displayed at the treatment control panel;

3. An interlock system shall be provided to ensure that the equipment can operate only in the mode which has been selected;

4. An interlock system shall be provided to prevent irradiation if any selected parameter in the treatment room does not agree with the selected parameter at the treatment control panel;

5. Moving beam radiation therapy shall be controlled to obtain the selected relationships between incremental dose monitor units and incremental movement. For equipment manufactured after July 9, 1997:

- An interlock system shall be provided to terminate irradiation if the number of dose monitor units delivered in any ten degrees of rotation or one centimeter of linear motion differs by more than 20 percent from the selected value;
- Where angle terminates the irradiation in moving beam radiation therapy, the dose monitor units delivered shall differ by less than 5 percent from the dose monitor unit value selected;
- An interlock shall be provided to prevent motion of more than five degrees or one centimeter beyond the selected limits during moving beam radiation therapy;
- An interlock shall be provided to require that a selection of direction be made at the treatment control panel in all units which are capable of both clockwise and counterclockwise moving beam radiation therapy.
- Moving beam radiation therapy shall be controlled with both primary position sensors and secondary position sensors to obtain the selected relationships between incremental dose monitor units and incremental movement.

6. Where the beam monitoring system terminates the irradiation in moving beam radiation therapy, the termination of irradiation shall be as required by 41.3(18)*"a"*(10); and

7. For equipment manufactured after July 9, 1997, an interlock system shall be provided to terminate irradiation if movement:

- Occurs during stationary beam radiation therapy; or
- Does not start or stops during moving beam radiation therapy unless such stoppage is a preplanned function.

b. Facility design requirements for therapeutic radiation machines operating above 500 kV. In addition to shielding adequate to meet requirements of 41.3(19), the following design requirements are made:

(1) Protective barriers. All protective barriers shall be fixed, except for access doors to the treatment room or movable beam interceptors.

(2) Control panel. In addition to other requirements specified in 41.3(136C), the control panel shall also:

1. Be located outside the treatment room;

2. Provide an indication of whether electrical power is available at the control panel and if activation of the radiation is possible;

3. Provide an indication of whether radiation is being produced; and

4. Include an access control (locking) device which will prevent unauthorized use of the therapeutic radiation machine.

(3) Viewing systems. Windows, mirrors, closed-circuit television or an equivalent viewing system shall be provided to permit continuous observation of the patient following positioning and during irradiation and shall be so located that the operator may observe the patient from the treatment control panel. The therapeutic radiation machine shall not be used for patient irradiation unless at least one viewing system is operational.

(4) Aural communications. Provision shall be made for continuous two-way aural communication between the patient and the operator at the control panel. The therapeutic radiation machine shall not be used for irradiation of patients unless continuous two-way aural communication is possible.

(5) Room entrances. Treatment room entrances shall be provided with warning lights in a readily observable position near the outside of all access doors, which will indicate when the useful beam is "ON" and when it is "OFF".

(6) Entrance interlocks. Interlocks shall be provided such that all access controls are activated before treatment can be initiated or continued. If the radiation beam is interrupted by any access control, it shall not be possible to restore the machine to operation without resetting the access control and reinitiating irradiation by manual action at the control panel.

(7) Beam interceptor interlocks. If the shielding material in any protective barrier requires the presence of a beam interceptor to ensure compliance with 641—paragraphs 40.26(1)*"a"* and *"b,"* interlocks shall be provided to prevent the production of radiation, unless the beam interceptor is in place, whenever the useful beam is directed at the designated barrier(s).

(8) Emergency cutoff switches. At least one emergency power cutoff switch shall be located in the radiation therapy room and shall terminate all equipment electrical power including radiation and mechanical motion. This switch is in addition to the termination switch required by 41.3(18)*"a"*(11). All emergency power cutoff switches shall include a manual reset so that the therapeutic radiation machine cannot be restarted from the unit's control console without resetting the emergency cutoff switch.

(9) Safety interlocks. All safety interlocks shall be designed so that any defect or component failure in the safety interlock system prevents or terminates operation of the therapeutic radiation machine.

(10) Surveys for residual radiation. Surveys for residual activity shall be conducted on all therapeutic radiation machines capable of generating photon and electron energies above 10 MV prior to machining, removing, or working on therapeutic radiation machine components which may have become activated due to photoneutron production.

(11) Possession of survey instrument(s). Each facility location authorized to use a therapeutic radiation machine in accordance with 41.3(18) shall have at its disposal appropriately calibrated portable monitoring equipment. As a minimum, such equipment shall include a portable radiation measurement survey instrument capable of measuring dose rates over the range 1 mrem (10 μSv) per hour to 1000 mrem (10 mSv) per hour. The survey instrument(s) shall be operable and calibrated at intervals not to exceed 12 months for the radiation measured.

c. Radiation therapy physicist support.

(1) The services of a radiation therapy physicist shall be required in facilities having therapeutic radiation machines with energies of 500 kV and above. The radiation therapy physicist shall be responsible for:

1. Full calibration(s) required by 41.3(18)*"e"* and protection surveys required by 41.3(16)*"a"*;

2. Supervision and review of dosimetry;

3. Beam data acquisition and transfer for computerized dosimetry, and supervision of its use;

4. Quality assurance, including quality assurance check review required by 41.3(18)*"f"*(5) of these regulations;

5. Consultation with the authorized user in treatment planning, as needed; and

6. Performing calculations/assessments regarding misadministrations.

(2) If the radiation therapy physicist is not a full-time employee of the registrant, the operating procedures required by 41.3(18)*"d"* shall also specifically address how the radiation therapy physicist is to be contacted for problems or emergencies, as well as the specific actions, if any, to be taken until the radiation therapy physicist can be contacted.

d. Operating procedures.

(1) No individual, other than the patient, shall be in the treatment room during treatment or during any irradiation for testing or calibration purposes;

(2) Therapeutic radiation machines shall not be made available for medical use unless the requirements of 41.3(16)*"a,"*41.3(18)*"e,"* and 41.3(18)*"f"* have been met;

(3) Therapeutic radiation machines, when not in operation, shall be secured to prevent unauthorized use;

(4) When adjustable beam-limiting devices are used, the position and shape of the radiation field shall be indicated by a light field;

(5) If a patient must be held in position during treatment, mechanical supporting or restraining devices shall be used; and

(6) A copy of the current operating and emergency procedures shall be maintained at the therapeutic radiation machine control console.

e. Acceptance testing, commissioning, and full calibration measurements.

(1) Acceptance testing, commissioning, and full calibration of a therapeutic radiation machine subject to 41.3(18) shall be performed by, or under the direct supervision of, a radiation therapy physicist:

1. Acceptance testing and commissioning shall be performed in accordance with "AAPM Code of Practice for Radiotherapy Accelerators: AAPM Report No. 47," prepared by Radiation Therapy Task Group 45, and the manufacturer's contractual specifications and shall be conducted before the first medical use following installation or reinstallation of the therapeutic radiation machine;

2. Full calibration shall include measurement of all parameters listed in Appendix D of 641—Chapter 41 and shall be performed in accordance with "AAPM Code of Practice for Radiotherapy Accelerators: AAPM Report No. 47," prepared by Radiation Therapy Task Group 45. Although it shall not be necessary to complete all elements of a full calibration at the same time, all parameters (for all energies) shall be completed at intervals not to exceed 12 calendar months, unless a more frequent interval is required by this agency.

3. The radiation therapy physicist shall perform all elements of a full calibration necessary to determine that all parameters are within acceptable limits:

- Whenever quality assurance check measurements indicate that the radiation output differs by more than 5 percent from the value obtained at the last full calibration and the difference cannot be reconciled. Therapeutic radiation machines with multienergy or multimode capabilities or both shall only require measurements for those modes or energies that are not within their acceptable range; and
- Following any component replacement, major repair, or modification of components that could significantly affect the characteristics of the radiation beam. If the repair, replacement or modification does not affect all modes or energies, measurements shall be performed on the affected mode/energy that is in most frequent clinical use at the facility. The remaining energies/modes may be validated with quality assurance check procedures against the criteria in 41.3(18)*"e"*(1)"3."

(2) The registrant shall use the dosimetry system described in 41.3(16)*"c"* to measure the radiation output for one set of exposure conditions.

(3) The registrant shall maintain a record of each calibration in an auditable form for the duration of the registration. The record shall include the date of the calibration, the manufacturer's name, model number, and serial number for the therapeutic radiation machine, the model numbers and serial numbers of the instruments used to calibrate the therapeutic radiation machine, and the signature of the radiation therapy physicist responsible for performing the calibration.

f. Periodic quality assurance checks.

(1) Periodic quality assurance checks shall be performed on all therapeutic radiation machines subject to 41.3(18) at intervals as specified in Appendix D of 641—Chapter 41;

(2) To satisfy the requirement of 41.3(18)*"f"*(1), quality assurance checks shall include determination of central axis radiation output and a representative sampling of periodic quality assurance checks contained in Appendix D of 641—Chapter 41. Representative sampling shall include all referenced periodic quality assurance checks at intervals not to exceed 12 consecutive calendar months;

(3) The registrant shall use a dosimetry system which has been intercompared within the previous 12 months with the dosimetry system described in 41.3(16)*"c"*(1) to make the periodic quality assurance checks required in 41.3(18)*"f"*(2);

(4) The registrant shall perform periodic quality assurance checks required by 41.3(18)*"f"*(1) in accordance with procedures established by the radiation therapy physicist;

(5) The registrant shall review the results of each periodic radiation output check according to the following procedures:

1. The authorized user and radiation therapy physicist shall be immediately notified if any parameter is not within its acceptable tolerance. The therapeutic radiation machine shall not be made available for subsequent medical use until the radiation therapy physicist has determined that all parameters are within their acceptable tolerances;

2. If all quality assurance check parameters appear to be within their acceptable range, the quality assurance check shall be reviewed and signed by either the authorized user or radiation therapy physicist within three treatment days; and

3. The radiation therapy physicist shall review and sign the results of each radiation output quality assurance check at intervals not to exceed one month.

(6) Therapeutic radiation machines subject to 41.3(18) shall have safety quality assurance checks of each external beam radiation therapy machine performed at intervals not to exceed one week or at longer intervals as recommended by the manufacturer;

(7) To satisfy the requirement of 41.3(18)*"f"*(6), safety quality assurance checks shall ensure proper operation of:

1. Electrical interlocks at each external beam radiation therapy room entrance;

2. Proper operation of the "BEAM-ON," interrupt and termination switches;

3. Beam condition indicator lights on the access doors, control console, and in the radiation therapy room;

4. Viewing systems;

5. Aural systems;

6. Electrically operated treatment room door(s) from inside and outside the treatment room;

7. At least one emergency power cutoff switch. If more than one emergency power cutoff switch is installed and not all switches are tested at once, each switch shall be tested on a rotating basis. Safety quality assurance checks of the emergency power cutoff switches may be conducted at the end of the treatment day in order to minimize possible stability problems with the therapeutic radiation machine;

(8) Rescinded IAB 4/11/07, effective 5/16/07.

(9) The registrant shall promptly repair any system identified in 41.3(18)*"f"*(7) that is not operating properly; and

(10) The registrant shall maintain a record of each quality assurance check required by 41.3(18)*"f"*(1) and 41.3(18)*"f"*(7) for three years. The record shall include the date of the quality assurance check, the manufacturer's name, model number, and serial number for the therapeutic radiation machine, the manufacturer's name, model number and serial number of the instrument(s) used to measure the radiation output of the therapeutic radiation machine, and the signature of the individual who performed the periodic quality assurance check.

41.3(19) Shielding and safety design requirements.

a. Each therapeutic radiation machine subject to 41.3(17) or 41.3(18) shall be provided with such primary or secondary barriers as are necessary to ensure compliance with 641—40.15(136C) and 641—40.26(136C).

b. Facility design information for all new installations of a therapeutic radiation machine or installations of a therapeutic radiation machine of higher energy into a room not previously approved for that energy shall be submitted for agency approval prior to actual installation of the therapeutic radiation machine. The minimum facility design information that must be submitted is contained in Appendix E of 641—Chapter 41.

41.3(20) Calibration of survey instruments.

a. The registrant shall ensure that the survey instruments used to show compliance with 645—41.3(136C) have been calibrated before first use, at intervals not to exceed 12 months, and following repair.

b. To satisfy the requirements of 41.3(20), the registrant shall:

(1) Calibrate all required scale readings up to 1000 mrem (10 mSv) per hour with an appropriate radiation source that is traceable to the National Institute of Standards and Technology (NIST);

(2) Calibrate at least two points on each scale to be calibrated. These points should be at approximately 1/3 and 2/3 of full scale;

(3) Consider a point as calibrated if the indicated dose rate differs from the calculated dose rate by not more than 10 percent; and

(4) Consider a point as calibrated if the indicated dose rate differs from the calculated dose rate by not more than 20 percent if a correction factor or graph is conspicuously attached to the instrument.

c. The registrant shall retain a record of each calibration required in 41.3(20) for three years. The record shall include:

(1) A description of the calibration procedure; and

(2) A description of the source used and the certified dose rates from the source, and the rates indicated by the instrument being calibrated, the correction factors deduced from the calibration data, the signature of the individual who performed the calibration, and the date of calibration.

d. The registrant may obtain the services of individuals licensed by this agency, the U.S. Nuclear Regulatory Commission, an agreement state, or a licensing state to perform calibrations of survey instruments. Records of calibrations that contain information required in 41.3(20) shall be maintained by the registrant.

[**ARC 0577C**, IAB 2/6/13, effective 3/13/13; **ARC 1639C**, IAB 10/1/14, effective 11/5/14]

641—41.4(136C) Radiation safety requirements for analytical X-ray equipment. Rescinded IAB 4/8/98, effective 7/1/98.

641—41.5(136C) Radiation safety requirements for wireline service operations and subsurface tracer studies. Rescinded IAB 4/8/98, effective 7/1/98.

641—41.6(136C) X-ray machines used for screening and diagnostic mammography.

41.6(1) *Definitions.* In addition to the definitions provided in 641—38.2(136C), 641—40.2(136C), and 641—41.1(136C), the following definitions shall be applicable to this rule.

"Accreditation body" means an entity that has been approved by FDA to accredit mammography facilities.

"Action limits" or *"action levels"* means the minimum and maximum values of a quality assurance measurement that can be interpreted as representing acceptable performance with respect to the parameter being tested. Values less than the minimum or greater than the maximum action limit or level indicate that corrective action must be taken by the facility. Action limits or levels are also sometimes called control limits or levels.

"Adverse event" means an undesirable experience associated with mammography activities. Adverse events include but are not limited to:

1. Poor image quality;

2. Failure to send mammography reports within 30 days to the referring physician or in a timely manner to the self-referred patient; and

3. Use of personnel who do not meet the applicable requirements of this chapter.

"Air kerma" means kerma in a given mass of air. The unit used to measure the quantity of air kerma is the Gray (Gy). For X-rays with energies less than 300 kiloelectronvolts (keV), 1 Gray of absorbed dose is delivered by 114 roentgens (R) of exposure.

"Annually" means within 10 to 14 months of previous occurrence.

"Artifact" means a substance or structure not naturally present in living tissue but of which an authentic image appears in a radiograph.

"Automatic exposure control systems" means automatic exposure control systems, often referred to as phototimers, which are designed to automatically determine and provide the exposure needed to produce an adequate density image by sampling the X-ray intensity after passage through the patient and image receptor.

"Average glandular dose" means the energy deposited per unit mass of glandular tissue averaged over all the glandular tissue in the breast, calculated from values of entrance exposure in air, the X-ray beam quality (half-value layer), and compressed breast thickness. For a 50 percent-50 percent adipose and glandular 4.2 centimeter breast, the average glandular dose shall not exceed 300 millirad (3 mGy). See also: "Dose."

"Breast implant" means a prosthetic device implanted in the breast.

"Calendar quarter" means any one of the following time periods during a given year: January 1 through March 31, April 1 through June 30, July 1 through September 30, or October 1 through December 31.

"Category 1" means medical education activities that have been designated as Category 1 by the Accreditation Council for Continuing Medical Education (ACCME), the American Osteopathic Association (AOA), a state medical society, or an equivalent organization.

"Certificate" means the certificate described in 41.6(2)*"a"*(2).

"Certification" means the process of approval of a facility by the FDA or this agency to provide mammography services.

"Clinical image" means a mammogram.

"Compression device" means a firm plastic paddle used to help hold the breast stationary and eliminate blurring due to motion, to help separate structures within the breast, and to decrease the thickness of breast tissue, minimizing the amount of radiation used and the amount of scattered radiation reaching the film.

"Computed radiography mammography" means a type of digital mammography in which the digital image receptor must be removed from the X-ray unit for the image to be read and processed by a separate image receptor reader.

"Consumer" means an individual who chooses to comment or complain in reference to a mammography examination, including the patient or representative of the patient (e.g., family member or referring physician).

"Contact hour" means an hour of training received through direct instruction.

"Continuing education unit" or *"continuing education credit"* means one contact hour of training.

"Craniocaudal view" means one of two routine views for mammography. The detector system is placed caudad to (below) the breast and the vertical X-ray beam is directed from cranial to caudad (downward) through the breast.

"Dedicated mammography equipment" means X-ray systems designed specifically for breast imaging, providing optimum imaging geometry, a device for breast compression and low dose exposure that can generate reproducible images of high quality.

"Direct detector technology" means a digital mammogram captured using a material which converts the X-ray energies directly to an electric signal.

"Direct instruction" means:

1. Face-to-face interaction between instructor(s) and student(s), as when the instructor provides a lecture, conducts demonstrations, or reviews student performance; or

2. The administration and correction of student examinations by an instructor(s) with subsequent feedback to the student(s).

"Direct supervision" means that:

1. During joint interpretation of mammograms, the supervising interpreting physician reviews, discusses, and confirms the diagnosis of the physician being supervised and signs the resulting report before it is entered into the patient's records; or

2. During the performance of a mammography examination or survey of the facility's equipment and quality assurance program, the supervisor is present to observe and correct, as needed, the performance of the individual being supervised who is performing the examination or conducting the survey.

"Dose" means the amount of energy deposited per unit mass of tissue due to X-radiation. The newer unit of absorbed dose is the Gray: 1 Gray=1 Joule of energy deposited per kilogram of tissue. The older unit of absorbed dose is the rad: 1 rad=0.01 Gray, 1 centiGray, or 10 milliGray.

"Exposure" means the amount of X-radiation, quantitated by measuring the amount of ionization in air caused by the radiation. The units of exposure are Coulombs of charge ionized per kilogram of air. The older unit of exposure is the Roentgen: 1 Roentgen=2.58 × 10E-4 Coulombs of charge per kilogram of air.

"Facility" means a hospital, outpatient department, clinic, radiology practice, mobile unit, office of a physician, or other facility that conducts mammography activities, including the following: operation of equipment to produce a mammogram, initial interpretation of the mammogram, and maintaining viewing conditions for that interpretation. This term does not include a facility of the Department of Veterans Affairs.

"FDA" means the Food and Drug Administration.

"First allowable time" means the earliest time a resident physician is eligible to take the diagnostic radiology boards from an FDA-designated certifying body. The "first allowable time" may vary with the certifying body.

"Full field digital mammography" means radiographic imaging of the breast using a digital image receptor with minimum dimensions of 18×23 cm to allow imaging the average size breast in a single exposure.

"Grids" means a set of thin lead strips spaced close to one another, interspaced by carbon fiber for mammographic grids. The grid is placed between the breast and the screen-film image receptor to reduce scattered radiation reaching the image receptor.

"Image noise." See "Radiographic noise."

"Image receptor support device" means, for mammography X-ray systems, that part of the system designed to support the image receptor during a mammographic examination and to provide a primary protective barrier.

"Interpreting physician" means a licensed radiologist who interprets mammograms and who meets the requirements set forth in 41.6(3)*"a."*

"Kerma" means the sum of the initial energies of all the charged particles liberated by uncharged ionizing particles in a material of given mass.

"Laterality" means the designation of either the right or left breast.

"Lead interpreting physician" means the interpreting physician assigned the general responsibility for ensuring that a facility's quality assurance program meets all of the requirements of this chapter. The administrative title and other supervisory responsibilities of the individual, if any, are left to the discretion of the facility.

"Mammogram" means a radiographic image produced through mammography.

"Mammographic modality" means a technology for radiography of the breast. Examples are screen-film mammography, xeromammography, and digital mammography.

"Mammography" means radiography of the breast but, for the purposes of 641—41.6(136C), does not include:

1. Radiography of the breast performed during invasive interventions for localization or biopsy procedures; or

2. Radiography of the breast performed with an investigational mammography device as part of a scientific study conducted in accordance with FDA investigational device exemption regulations; or

3. Radiography of the breast performed as part of either a breast localization procedure or a post-stereotactic clip placement localization procedure.

"Mammography equipment evaluation" means an on-site assessment of the mammography unit or image processor performance by a medical physicist for the purpose of making a preliminary determination as to whether the equipment meets all of the applicable standards.

"Mammography medical outcomes audit" means a systematic collection of mammography results and the comparison of those results with outcomes data.

"Mammography unit(s)" means an assemblage of components for the production of X-rays for use during mammography including, at a minimum: an X-ray generator, an X-ray control, a tube housing assembly, a beam limiting device, and the supporting structures for these components.

"Mean optical density" means the average of the optical densities measured using phantom thicknesses of 2, 4, and 6 centimeters with values of kilovolt peak (kVp) clinically appropriate for those thicknesses.

"Medical physicist" means a person trained in evaluating the performance of mammography equipment and facility quality assurance programs and who meets the qualifications for a medical physicist set forth in 41.6(3)*"c."*

"Mediolateral view" means one of the routine views for mammography in addition to the craniocaudal view. The detector system is placed lateral to the breast and the horizontal X-ray beam is directed from medial to lateral aspect through the breast.

"MQSA" means the Mammography Quality Standards Act of 1992.

"Multi-reading" means two or more physicians, at least one of whom is an interpreting physician, interpreting the same mammogram. A radiologist may count the current mammographic examination and one prior mammographic examination, provided the radiologist was not the interpreter of the prior mammographic examination. A separate tally shall be kept for the prior examinations.

"Oblique mediolateral view" means one of the standard two views of the breast. The detector system (cassette holder assembly) is angled 30-60 degrees from horizontal so that the cassette assembly is parallel to the pectoral muscle and the corner of the cassette holder fits comfortably into the axilla. The X-ray beam is directed from the supero-medial to the infero-lateral aspect of the breast.

"Patient" means any individual who undergoes a mammography evaluation in a facility, regardless of whether the person is referred by a physician or is self-referred.

"Phantom" means an artificial test object used to simulate radiographic characteristics of compressed breast tissue and containing components that radiographically model aspects of breast disease and cancer.

"Phantom image" means a radiographic image of a phantom.

"Physical science" means physics, chemistry, radiation science (including medical physics and health physics), and engineering.

"Positive mammogram" means a mammogram that has an overall assessment of findings that are either "suspicious" or "highly suggestive of malignancy."

"Provisional certification" means the six-month certification time period in which a facility has to complete the accreditation/certification process.

"Qualified instructor" means individuals whose training and experience adequately prepare them to carry out specified training assignments. Interpreting physicians, radiologic technologists, or medical physicists who meet the requirements of 41.6(3) would be considered qualified instructors in their respective areas of mammography. Radiological technologists who meet the requirements of 41.6(3) and have passed a state-approved mammography examination such as the examination given by the American Registry of Radiography Technologists would be considered qualified instructors in their respective areas of mammography. The examination would include, but not necessarily be limited to: breast anatomy and physiology, positioning and compression, quality assurance/quality control techniques, and imaging of patients with breast implants. Other examples of individuals who may be qualified instructors for the purpose of providing training to meet the regulations of this chapter

include, but are not limited to, instructors in a post-high school training institution and manufacturers' representatives.

"Quality control technologist" means an individual meeting the requirements of 41.6(5)*"a"*(4) who is responsible for those quality assurance responsibilities not assigned to the lead interpreting physician or to the medical physicist.

"Radiographic equipment" means X-ray equipment used for the production of static X-ray images.

"Radiologic technologist" means an individual specifically trained in the use of radiographic equipment and in the positioning of patients for radiographic examinations and who meets the requirements set forth in 41.6(3)*"b."*

"Radiologist continuing experience" means the number of mammograms interpreted by a radiologist in the past 24-month period. For the purpose of counting, a radiologist may count the current mammographic examination and one prior mammographic examination, provided the radiologist was not the interpreter of the prior mammographic examination. A separate tally shall be kept for the prior examinations.

"Reinstatement" means the process of recertification of a facility that has lost or voluntarily given up previous accreditation/certification.

"Screen-film mammography" means mammography performed with high-detailed intensifying screen(s) in close contact with the film.

"Screening mammography" means X-ray breast examination of asymptomatic individuals in an attempt to detect breast cancer when it is small, nonpalpable, and confined to the breast.

"Serious adverse event" means an adverse event that may significantly compromise clinical outcomes or an adverse event for which a facility fails to take appropriate corrective action in a timely manner.

"Serious complaint" means a report of a serious adverse event.

"Standard breast" means a 4.2 centimeter (cm) thick compressed breast consisting of 50 percent glandular and 50 percent adipose tissue.

"Supplier" means the individual in control of a mammography facility whose basic responsibility is the overall quality of all mammograms conducted in that particular facility.

"Survey" means an on-site physics consultation and evaluation of a facility quality assurance program performed by a medical physicist.

"Time cycle" means the film development time.

"Traceable to a national standard" means an instrument is calibrated at either the National Institute of Standards and Technology (NIST) or at a calibration laboratory that participates in a proficiency program with NIST at least once every two years and the results of the proficiency test conducted within 24 months of calibration show agreement within ± 3 percent of the national standard in the mammography energy range.

"Written report" means interpreting physician's technical narrative of a mammography evaluation.

"Written statement" means interpreting physician's description of a mammography examination written in lay terms.

41.6(2) *Registration and application standards and requirements.*

a. Registration and certificates.

(1) Each radiation machine used to perform mammography shall be registered according to 641—subrule 39.3(2).

(2) A certificate issued by the FDA or this agency is required for lawful operation of all mammography facilities subject to the provisions of this subrule. To obtain a certificate from the FDA or this agency, facilities are required to meet the quality standards in 641—41.6(136C) and to be accredited and approved by an approved accreditation body.

b. Each facility wishing to perform mammography shall apply for agency approval by providing or verifying the following information for each mammography machine:

(1) The mammography unit meets the criteria for agency-approved mammography accreditation bodies.

(2) The mammography equipment and facility meet the general requirements of these rules for radiation machines.

(3) The radiation machine is specifically designed to perform mammography.

(4) The radiation machine is used according to these rules on patient radiation exposure and radiation dose levels.

(5) The radiation machine is operated by individuals meeting the requirements of this subrule.

(6) The entire mammography system is evaluated at least annually by a medical physicist.

(7) The equipment, personnel, procedures, and records are evaluated annually by a physician consultant.

(8) Provisional or reinstatement certification. A new facility beginning operation after September 30, 1994, is eligible to apply for provisional or reinstatement certification. This will enable the facility to perform mammography and to obtain the clinical images needed to complete the accreditation process. To apply for and receive provisional or reinstatement certification, a facility must meet the requirements of 641—41.6(136C). Provisional or reinstatement certification shall be effective for up to six months from the date of issuance and cannot be renewed. The facility may apply for one 90-day extension.

c. Suspension, revocation, or denial of mammography certification.

(1) Mammography certification may be suspended or revoked with cause if any facility or machine does not meet one or more of the standards of these rules, will not permit inspections or provide access to records or information in a timely fashion, or has been guilty of misrepresentation in obtaining the certification.

(2) The facility shall have opportunity for a hearing in connection with a denial, suspension or revocation of mammography certification in accordance with 641—Chapter 173.

(3) An emergency order suspending or revoking certification may be issued in accordance with 641—173.31(17A) if the agency finds the radiation unit or facility violates rules that seriously affect the health, safety, and welfare of the public. An opportunity for hearing shall be held within 20 working days after the issuance of the order. The order shall be effective during the proceedings.

(4) If certification is revoked, the radiation machine shall not be used for mammography until reinstated.

(5) If a facility's certification is revoked, no person who owned or operated that facility at the time the act occurred may own or operate a mammography facility in Iowa within two years of the date of revocation.

d. Reinstatement of mammography certification after revocation.

(1) An application for reinstatement shall be submitted and processed as an initial application. Appropriate corrective actions must be submitted with the application.

(2) The agency shall inspect the radiation machine within 60 days of the approved reinstatement application.

(3) A full certificate shall be issued only after the agency has inspected the radiation machine and determined that it meets the requirements of these rules.

e. Inspections. The agency shall conduct an inspection of each radiation machine no later than 14 months after initial mammography certification and at least annually thereafter.

f. The authorization of facilities is included in the accreditation process for facilities accredited by the state of Iowa. Determination of the quality of the mammograms produced by facilities accredited by the state of Iowa will be made. To make the determination, each facility will:

(1) Provide at the time of initial accreditation, new unit installation, or reaccreditation (at least every three years) thereafter, two original (not copies) mammography examinations which meet the following criteria for the clinical image review process by the agency:

1. One mammography examination, including craniocaudal and mediolateral oblique views of each breast, of a patient with predominantly fatty breast tissue,

2. One mammography examination, including craniocaudal and mediolateral oblique views of each breast, of a patient with predominantly glandular breast tissue, and

3. Each mammography examination must have been interpreted as a "negative" or "benign" examination.

(2) Provide randomly, at the request of agency mammography inspectors, two mammography examinations (mammograms) which meet the criteria in 41.6(2)*"f"*(1).

(3) Provide at the time of initial accreditation, new unit installation, or reaccreditation (at least every three years) thereafter, a phantom image taken with the unit being accredited within six months of the submission date for review by the agency.

(4) Be billed the fee for the quality review process as set forth in 641—subparagraph 38.8(1)*"b"*(2).

(5) Be provided with a written explanation of the results of the quality review process which will accompany the returned mammograms referred to in 41.6(2)*"f"*(3).

g. Facilities accredited by an approved accrediting body other than the state of Iowa must be authorized by the agency. Quality determination for these facilities will be made by the agency through a phantom image provided at the time of initial authorization, new unit authorization, or reauthorization (at least every three years) thereafter, taken with the unit being accredited within six months of the submission date.

h. Federal mammography regulations. All Iowa facilities performing mammography shall comply with the applicable regulations found in 21 CFR Part 900 which has an effective date of April 28, 1999. Persons certified to perform mammography in Iowa shall be responsible for ensuring compliance with the appropriate CFR regulations or Iowa administrative rules, whichever are more stringent.

i. Soft copy review workstation requirements.

(1) Soft copy review workstations used for final interpretation of mammogram images must be a configuration of two monitors that meet one of the following criteria:

1. Have 5 megapixel resolution; or

2. Be approved by the United States Food and Drug Administration 510K process and be intended for digital mammography use.

(2) The workstation must have a quality control program substantially the same as that outlined by the image receptor manufacturer's quality control manual or that outlined by the image receptor manufacturer's designated soft copy review workstation quality control manual.

41.6(3) *Mammography personnel.* The following requirements apply to all personnel involved in any aspect of mammography, including the production, processing, and interpretation of mammograms and related quality assurance activities:

a. Interpreting physicians. All radiologists interpreting mammograms shall meet the following qualifications:

(1) Initial qualifications. Unless the exemption in 41.6(3)"a"(3)"1" applies, before beginning to interpret mammograms independently, the interpreting radiologist shall:

1. Be licensed to practice medicine in Iowa;

2. Either:

- Be certified in an appropriate specialty area by a body determined by FDA to have procedures and requirements adequate to ensure that physicians certified by the body are competent to interpret radiological procedures, including mammography; or
- Have had at least three months of documented formal training in the interpretation of mammograms and in topics related to mammography. The training shall include instruction in radiation physics, including radiation physics specific to mammography, radiation effects, and radiation protection. The mammographic interpretation component shall be under the direct supervision of a radiologist who meets the requirements of 41.6(3)"a"; and

3. Have a minimum of 60 hours of documented medical education in mammography, which shall include: instruction in the interpretation of mammograms and education in basic breast anatomy, pathology, and physiology, technical aspects of mammography, and quality assurance and quality control in mammography. All 60 of these hours shall be Category 1 and at least 15 of the Category 1 hours shall have been acquired within the 36 months immediately prior to the date that the radiologist qualifies as an interpreting physician. Hours spent in residency specifically devoted to mammography will be considered as equivalent to Category 1 continuing medical education credits and will be accepted if documented in writing by the appropriate representative of the training institution;

4. Unless the exemption in 41.6(3)"a"(3)"2" applies, have interpreted or multi-read at least 240 mammographic examinations within the six-month period immediately prior to the date that the radiologist qualifies as an interpreting physician. This interpretation or multi-reading shall be under the direct supervision of an interpreting physician; and

5. Before an interpreting physician may begin independently interpreting mammograms produced by a new mammographic modality other than the modality in which the initial training was received, the interpreting physician shall have at least 8 hours of Category 1 continuing medical education credits in the new mammographic modality or at least 8 hours of training in the new mammographic modality provided by a vendor manufacturing the new mammographic modality equipment. An interpreting physician previously qualified to interpret a new mammographic modality in another state will have six months to complete this requirement. The six-month time frame begins when the interpreting physician commences Iowa new mammographic modality interpretation.

(2) Continuing experience and education. All interpreting physicians shall maintain their qualifications by meeting the following requirements:

1. Following the second anniversary date of the end of the calendar quarter in which the requirements of 41.6(3)*"a"*(1) were completed, the interpreting physician shall have read or multi-read at least 960 mammographic examinations during the prior 24 months, during the 24-month period ending on the last day of the previous calendar quarter, or during any 24-month period between the two. The facility will choose one of these dates to determine the 24-month period.

2. Following the third anniversary date of the end of the calendar quarter in which the requirements of 41.6(3)*"a"*(1) were completed, the interpreting physician shall have taught or completed at least 15 Category 1 continuing education units in mammography during the prior 36 months, during the 36-month period ending on the last day of the previous calendar quarter, or during any 36-month period between the two. The facility will choose one of these dates to determine the 36-month period.

3. Units earned through teaching a specific course can be counted only once towards the 15 required by 41.6(3)*"a"*(2)"2" even if the course is taught multiple times during the previous 36 months.

4. Continuing qualifications must be met and a current state of Iowa medical license must be in effect whenever mammography interpretations are performed by the physician.

(3) Exemptions.

1. Those physicians who qualified as interpreting physicians under 41.6(3)*"a"* or FDA interim regulations prior to April 28, 1999, are considered to have met the initial requirements of 41.6(3)*"a."* They may continue to interpret mammograms provided they continue to meet the licensure requirements of 41.6(3)*"a"*(1)"1" and the continuing experience and education requirements of this subrule.

2. Physicians who have interpreted or multi-read at least 240 mammographic examinations under the direct supervision of an interpreting physician in any six-month period during the last two years of a diagnostic radiology residency and who become appropriately board certified at the first allowable time, as defined by an eligible certifying body, are otherwise exempt from 41.6(3)*"a"*(1)"4."

(4) Reestablishing qualifications. Interpreting physicians who fail to maintain the required continuing experience or continuing education requirements shall reestablish their qualifications before resuming the independent interpretation of mammograms, as follows:

1. Interpreting physicians who fail to meet the continuing experience requirements of 41.6(3)*"a"*(2)"1" shall:

- Interpret or multi-read at least 240 mammographic examinations under the direct supervision of an interpreting physician, or
- Interpret or multi-read a sufficient number of mammographic examinations, under the direct supervision of an interpreting physician, to bring the physician's total to at least 960 examinations for the prior 24 months, whichever is less. The interpretations required under 41.6(3)*"a"*(4)"1" shall be done within the six months immediately prior to resuming independent interpretation. Consecutive or back-to-back requalification of mammography personnel, due to failure to meet continuing education or experience requirements, will be allowed once without proof of extenuating circumstances. This agency will determine the validity of such proof and render a decision after review of all pertinent information.

Those individuals who are denied requalification will be allowed to resubmit for requalification following a 90-day waiting period.

2. Interpreting physicians who fail to meet the continuing education requirements of 41.6(3)*"a"*(2)"2" shall obtain a sufficient number of additional Category 1 continuing medical education credits in mammography to bring their total up to the required 15 credits in the previous 36 months before resuming independent interpretation.

b. Radiologic technologists. All mammographic examinations shall be performed by general radiographers who meet the following general requirements, mammography requirements, and continuing education and experience requirements:

(1) General requirements. Be permitted to operate as a general radiographer in Iowa; and

(2) Mammography requirements. Have qualified as a radiologic technologist under 41.6(3)*"b"* before April 28, 1999, or have completed at least 40 contact hours of documented training specific to mammography under the supervision of a qualified instructor after successful completion of at least a two-year radiography program. The hours of documented training shall include, but not necessarily be limited to:

1. Training in breast anatomy and physiology, positioning and compression, quality assurance/quality control techniques, and imaging of patients with breast implants;

2. The performance of a minimum of 25 examinations under the direct supervision of an individual qualified under 41.6(3)*"b"*; and

3. Before a radiologic technologist may begin independently performing mammographic examinations using a mammographic modality other than one of those for which the technologist received training under 41.6(3)*"b"*(2)"3," the technologist shall have at least 8 hours of continuing education units in the new modality. The 8 hours may not be derived from the supervised examination of patients; and

(3) Continuing education requirements.

1. Following the third anniversary date of the end of the calendar quarter in which the requirements of 41.6(3)*"b"*(1) and (2) were completed, the radiologic technologist shall have taught or completed at least 15 continuing education units in mammography during the prior 36 months, during the 36-month period ending on the last day of the previous calendar quarter, or during any 36-month period between the two. The facility will choose one of these dates to determine the 36-month period.

2. Units earned through teaching a specific course can be counted only once towards the 15 required in 41.6(3)*"b"*(3)"1" even if the course is taught multiple times during the previous 36 months.

3. Requalification. A radiologic technologist who fails to meet the continuing education requirements of 41.6(3)*"b"*(3)"1" shall obtain a sufficient number of continuing education units in mammography to bring the total up to at least 15 in the previous 36 months. The continuing education for requalification cannot be obtained by performing supervised mammography examinations. The technologist may not resume performing unsupervised mammography examinations until the continuing education requirements are completed.

4. Continuing qualifications must be met and an Iowa permit to practice radiography must be in effect whenever mammogram procedures are performed by the radiologic technologist.

5. Only 50 percent of the total required mammography continuing education hours may be obtained through presenting, or acting as a trainer for, a continuing education or training program.

(4) Continuing experience requirements.

1. Following the second anniversary date on which the requirements of 41.6(3)*"b"*(1) and (2) were completed, the radiologic technologist shall have performed a minimum of 200 mammography examinations during the prior 24 months, during the 24-month period ending on the last day of the previous calendar quarter, or during any 24-month period between the two. The facility will choose one of these dates to determine the 24-month period.

2. Requalification. Radiologic technologists who fail to meet the continuing experience requirements of this subrule shall perform a minimum of 25 mammography examinations under the direct supervision of a qualified radiologic technologist before resuming the performance of unsupervised mammography examinations.

3. Continuing qualifications must be met and an Iowa permit to practice radiography must be in effect whenever mammogram procedures are performed by the radiologic technologist.

(5) Consecutive or back-to-back requalification of mammography personnel, due to failure to meet continuing education or experience requirements, will be allowed once without proof of extenuating circumstances. This agency will determine the validity of such proof and render a decision after review of all pertinent information. Those individuals who are denied requalification will be allowed to resubmit for requalification following a 90-day waiting period.

c. Medical physicists. All medical physicists conducting surveys of mammography facilities and providing oversight of the facility quality assurance program under 41.6(3)*"c"*(2) shall meet the following:

(1) Initial qualifications.

1. Be Iowa approved; and

2. Have a master's degree or higher in a physical science from an accredited institution, with no less than 20 semester hours or 30 quarter hours of college undergraduate or graduate level physics;

3. Have 20 contact hours of documented specialized training in conducting surveys of mammography facilities; and

4. Have experience conducting surveys in at least one mammography facility and have a total of at least 10 mammography units. No more than one survey of a specific unit within a period of 60 days can be counted towards the total mammography unit survey requirement. After April 28, 1999, experience conducting surveys must be acquired under the direct supervision of a medical physicist who meets all the requirements of this subrule; or

(2) Alternative initial qualifications.

1. Have qualified as a medical physicist under FDA interim regulations and have retained that qualification by maintenance of the active status of any licensure, approval, or certification required under the interim regulations; and

2. Prior to April 28, 1999, have:

- A bachelor's degree or higher in a physical science from an accredited institution with no less than 10 semester hours or equivalent of college undergraduate or graduate level physics.
- Forty contact hours of documented specialized training in conducting surveys of mammography facilities.
- Experience conducting surveys in at least one mammography facility and have a total of at least 20 mammography units. No more than one survey of a specific unit within a period of 60 days can be counted towards the total mammography unit survey requirement. The training and experience requirements must be met after fulfilling the degree requirement.
- At least eight hours of training in surveying units of the new mammographic modality before independently performing mammographic surveys of a new mammographic modality other than one for which the physicist received training to qualify under this subrule.

(3) Continuing qualifications.

1. Continuing education. Following the third anniversary date on which the requirements of 41.6(3)*"c"*(1) or (2) were completed, the medical physicist shall have taught or completed at least 15 continuing education units in mammography during the prior 36 months, during the 36-month period ending on the last day of the previous calendar quarter, or during any 36-month period between the two. The facility shall choose one of these dates to determine the 36-month period. Units earned through teaching a specific course shall be counted only once towards the required 15 units in a 36-month period, even if the course is taught multiple times during the 36 months.

2. Continuing experience. Following the second anniversary date on which the requirements of this subrule were completed, the medical physicist shall have surveyed at least two mammography facilities and a total of at least 6 mammography units during the prior 24 months, during the 24-month period ending on the last day of the previous calendar quarter, or during any 24-month period between the two. The facility shall choose one of these dates to determine the 24-month period. No more than one survey of a specific facility within a 10-month period or a specific unit within a period of 60 days shall be counted towards this requirement.

3. Continuing qualifications must be met whenever medical physics services are provided by the medical physicist.

(4) Reestablishing qualifications. Medical physicists who fail to maintain the required continuing qualifications of this subrule may not perform the MQSA surveys without the supervision of a qualified medical physicist. Before independently surveying another facility, medical physicists must reestablish their qualifications as follows:

1. Medical physicists who fail to meet the continuing education requirements of this subrule shall obtain a sufficient number of continuing education units to bring their total units up to the required 15 in the previous three years.

2. Medical physicists who fail to meet the continuing experience requirements of this subrule shall complete a sufficient number of surveys under the direct supervision of a medical physicist who meets the qualifications of this subrule to bring their total surveys up to the required two facilities and 6 units in the previous 24 months. No more than one survey of a specific unit within a period of 60 days can be counted towards the total mammography unit survey requirement.

d. Retention of personnel records. Facilities shall maintain records to document the qualifications of all personnel who worked at the facility as interpreting physicians, general radiographers, or medical physicists. These records must be available for review by the MQSA inspectors. Records of personnel no longer employed by the facility should not be discarded until the next annual inspection has been completed and the agency has determined that the facility is in compliance with the MQSA personnel requirements.

41.6(4) *Obtaining and preserving records.*

a. The facility performing the current mammography examination must make all reasonable efforts to obtain the patient's recent mammography records, including original images or films, copies of written reports prepared by interpreting physicians, and other relevant information pertinent to previous mammograms that might be available from other facilities, for comparison with the current mammography records.

b. The facility must make, for each patient, a written report of each mammography examination performed. This report shall include:

(1) The date the mammography procedure was performed.

(2) The date of the interpretation.

(3) The name of the interpreting physician.

(4) The name of the patient and an additional patient identifier.

(5) A description of the procedures performed.

(6) The name of the referring physician (if any) or other physician (if any) identified by the patient to receive the interpreting physician's written report.

(7) The date the interpreting physician's written report was sent to the appropriate physician or patient.

(8) A separate and distinct section entitled, "Assessment" with the appropriate assessment term. One of the following terms in quotations or an approved equivalent must be included in the assessment:

1. "Negative": Nothing to comment upon (if the interpreting physician is aware of clinical findings or symptoms, despite the negative assessment, these shall be explained).

2. "Benign": Also a negative assessment.

3. "Probably benign": Finding(s) has a high probability of being benign.

4. "Suspicious": Finding(s) without all the characteristic morphology of breast cancer but indicating a definite probability of being malignant.

5. "Highly suggestive of malignancy": Finding(s) has a high probability of being malignant.

6. "Incomplete: Need additional imaging evaluation" shall be assigned as an assessment in cases where no final assessment category can be assigned due to incomplete workup, and reasons why no assessment can be made shall be stated by the interpreting physician.

(9) Recommendations made to the health care provider about what additional actions, if any, should be taken. All clinical questions raised by the referring health care provider shall be addressed in the report to the extent possible, even if the assessment is negative or benign.

c. Preservation of records.

(1) The facility must provide satisfactory assurances (as documented in its medical records) that the images or films of the first and subsequent mammography procedures and the related written reports of the interpreting physician for each patient are either placed in the patient's medical record kept by the facility or sent for placement in the patient's medical record as directed by the patient's physician or the patient.

(2) Records retained by the facility must be retained for at least 60 calendar months following the date of service, as long as the patient continues consecutive mammograms. If no additional mammograms of the patient are performed, the records must be retained for at least ten years.

(3) If the facility should cease to exist before the end of the retention period, the records must be transferred to the patient or patient's physician or other mammographic facility.

(4) The facility shall upon request by, or on behalf of, the patient, permanently or temporarily, transfer the original mammograms and copies of the patient's reports to a medical institution, or to a physician or health care provider of the patient, or to the patient directly.

(5) Any fee charged to the patient for providing the services in subparagraph (4) above shall not exceed the documented costs associated with this service.

d. Communication of results to the patient. Each facility shall maintain a system to ensure that the results of each mammographic examination are communicated in lay terms to each patient in a time period not to exceed 30 days from the date of the mammography examination. If assessments are "Suspicious" or "Highly suggestive of malignancy" and the patient has not named a health care provider, the facility shall make reasonable attempts to ensure that the results are communicated to the patient as soon as possible.

(1) As soon as possible, but no later than 30 days from the date of the mammography examination, patients who do not name a health care provider to receive the mammography report shall be sent the report described in 41.6(4)*"e"*(1) in addition to a written notification of results in lay terms.

(2) Each facility that accepts patients who do not have a primary care provider shall maintain a system for referring such patients to a health care provider when clinically indicated.

e. Communication of results to health care providers. When the patient has a referring health care provider or the patient has named a health care provider, the facility shall:

(1) Provide a written report of the mammography examination, including all of the items listed in 41.6(4)*"b,"* to the health care provider as soon as possible, but no later than 30 days from the date of the examination, and

(2) If the assessment is "Suspicious" or "Highly suggestive of malignancy," make reasonable attempts to communicate with the health care provider as soon as possible or, if the health care provider is unavailable, to a responsible designee of the health care provider.

f. Mammographic image identification. Each mammographic image shall have the following information indicated on it in a permanent, legible, and unambiguous manner and placed so as not to obscure anatomic structures:

(1) Name of patient and an additional patient identifier.

(2) Date of examination.

(3) View and laterality. This information shall be placed on the image in a position near the axilla. Standardized codes specified by the accreditation body and approved by the FDA shall be used to identify view and laterality.

(4) Facility name and location. At a minimum, the location shall include the city, state, and ZIP code of the facility.

(5) Technologist identification.

(6) Cassette/screen identification.

(7) Mammography unit identification, if there is more than one unit in the facility.

41.6(5) *Quality assurance program.*

a. The facility shall ensure that the facility has an equipment quality assurance program specific to mammography and covering all components of the system to ensure consistently high-quality images with minimum patient exposure. Responsibility for the quality assurance program and for each of its

elements shall be assigned to individuals who are qualified for their assignments and who shall be allowed adequate time to perform these duties.

(1) Lead interpreting physician. The facility shall identify a lead interpreting physician who shall have the general responsibility of ensuring that the quality assurance program meets all requirements of these rules. No other individual shall be assigned or shall retain responsibility for quality assurance tasks unless the lead interpreting physician has determined that the individual's qualifications for, and performance of, the assignment are adequate.

(2) Interpreting physicians. All interpreting physicians interpreting mammograms for the facility shall:

1. Follow the facility procedures for corrective action when the images they are asked to interpret are of poor quality, and

2. Participate in the facility's medical outcomes audit program.

(3) Medical physicist. Each facility shall have the services of a medical physicist available to survey mammography equipment and oversee the equipment-related quality assurance practices of the facility. At a minimum, the medical physicist(s) shall be responsible for performing the surveys and mammography equipment evaluations and providing the facility with the applicable reports.

(4) Quality control technologist. Responsibility for all individual tasks within the quality assurance program not assigned to the lead interpreting physician or the medical physicist shall be assigned to a quality control technologist(s). The tasks are to be performed by the quality control technologist or by other personnel qualified to perform the tasks. When other personnel are utilized for these tasks, the quality control technologist shall ensure that the tasks are completed in such a way as to meet the requirements of 41.6(5)*"e"* through *"k."*

b. The facility shall ensure that a general review of the program is conducted at least annually and have available the services of a qualified medical physicist who is capable of establishing and conducting the program.

c. Under the direction of the lead interpreting physician, the medical physicist shall have responsibility for establishing and conducting the equipment quality assurance program. The program shall include:

(1) Conducting or training others to conduct equipment performance monitoring functions.

(2) Analyzing the monitoring results to determine if there are any problems requiring correction.

(3) Ensuring that the facility has procedures in place for carrying out or arranging for the necessary corrective actions as well as for the calibrations and other preventive maintenance.

d. Calibration of equipment. All variable parameters of the equipment shall be calibrated:

(1) When the equipment is first installed.

(2) After any major changes or replacement of parts.

(3) At least annually during use based on recommendations of the mammography imaging medical physicist.

(4) When quality assurance tests indicate that calibration is needed.

e. Performance monitoring. The supplier shall routinely ensure that the performance of the mammography system is monitored. The parameters to be monitored for film-screen mammography shall include but not be limited to:

(1) Processor performance (through daily sensitometric-densitometric means).

(2) Half-value layer.

(3) Output reproducibility and linearity.

(4) Automatic exposure control reproducibility and linearity.

(5) Adequacy of film storage (both before use and after exposure if processing does not occur immediately).

(6) Availability and use of technique charts that shall include an indication of the kV-target-filter combination to be used with each image receptor.

(7) Darkroom integrity, to be performed at least semiannually or when conditions have changed, shall include an inspection for light leaks, a fog test, and a safe light test.

(8) Image quality. The minimum image quality achieved at a mammography facility shall be the ability to observe the image of at least four 0.75-mm fibriles, three 0.32-mm speck groups, and three 0.75-mm masses from an FDA-approved phantom (or equivalent) on the standard mammographic film used at the facility. No mammograms shall be performed if this minimum is not met.

f. Frequency of monitoring.

(1) Processor performance shall be accomplished daily before processing patient films.

(2) Image quality shall be monitored at least weekly with a phantom and every time the unit is altered including the replacement of parts.

(3) All other parameters shall be proportional to the expected variability of each parameter, but at least annually.

g. Evaluation of monitoring results. Full field digital mammography units must comply with the quality control test requirements outlined by the performance criteria in the appropriate manufacturer's quality control manual.

(1) Standards of image quality giving acceptable ranges of values for each of the parameters tested shall be established to aid in the evaluation. The standards of image quality related to dose shall include a requirement that the mean glandular dose for one craniocaudal view of a 4.2 cm compressed breast (50 percent adipose/50 percent glandular) or equivalent phantom shall not exceed 100 millirad for film-screen units with no grids, 300 millirad for film-screen units with grids, or 300 millirad for full field digital units.

(2) The monitoring results shall be compared routinely by the facility staff to the standards of image quality in 41.6(5)*"k."* If the results fall outside the acceptable range, the test shall be repeated. For film-screen mammography, if the results continue to be unacceptable, the source of the problem shall be identified and corrected before further examinations are conducted. For full field digital mammography, if any test results fall outside the performance criteria range listed for the unit, specific actions as directed in the appropriate quality control manual shall be followed.

h. Retake analysis program—film-screen and full field digital.

(1) A program shall be established as a further aid in detecting and correcting problems affecting image quality or exposure.

(2) All retakes shall be logged including date, technologist's name and reason for retake. A retake analysis shall be performed every 250 patients or quarterly, whichever comes first. If more than 250 mammograms are performed in one week, weekly analysis is acceptable.

(3) If the total repeat or reject rate changes from the previously determined rate by more than 2.0 percent of the total films included in the analysis, the reason(s) for the change shall be determined. Any corrective actions shall be recorded and the results of these corrective actions shall be assessed.

i. Medical outcomes audit. Each facility shall establish a system for reviewing outcome data from all mammography performed, including follow-up on the disposition of positive mammograms and correlation of surgical biopsy results with the interpreting physician's findings. This program shall be designed to ensure the reliability, clarity, and accuracy of the interpretation of mammograms.

(1) Analysis of these outcome data shall be made individually and collectively for all interpreting physicians at the facility. In addition, any cases of breast cancer among women imaged at the facility that subsequently become known to the facility shall prompt the facility to initiate follow-up on surgical and pathology results, or both, and review of the mammograms taken prior to the diagnosis of a malignancy. Responsibility for each requirement for monitoring shall be assigned to qualified personnel and documented in the facility's records.

(2) Frequency of audit analysis. The facility's first audit analysis shall be initiated no later than 12 months after the date the facility becomes certified, or 12 months after April 28, 1999, whichever date is the latest. This audit analysis shall be completed within an additional 12 months to permit completion of diagnostic procedures and data collection. Subsequent audit analyses will be conducted at least once every 12 months.

(3) Reviewing interpreting physician. Each facility shall designate at least one interpreting physician to review the medical outcomes audit data at least once every 12 months. This individual shall record the dates of the audit period(s) and shall be responsible for analyzing results based on this audit. This individual shall also be responsible for documenting the results and notifying other interpreting

physicians of the results and the facility aggregate results. If follow-up actions are taken, the reviewing interpreting physician shall also be responsible for documenting the nature of the follow-up. The reviewing physician shall sign the medical audit as proof of the evaluation of the data.

j. Quality assurance records. The lead interpreting physician, quality control technologist, and medical physicist shall ensure that records concerning employee qualifications to meet assigned quality assurance tasks, mammography technique and procedures, quality control (including monitoring data, problems detected by analysis of that data, corrective actions, and the effectiveness of the corrective actions), safety, and protection are properly maintained and updated. These quality control records shall be kept for each test specified in these rules until the next annual inspection has been completed and the facility is in compliance with the quality assurance requirements or until the test has been performed two additional times at the required frequency, whichever is longer.

k. Quality assurance—equipment.

(1) Daily quality control tests. Film processors used to develop mammograms shall be adjusted and maintained to meet the technical development specifications for the mammography film in use. A processor performance test shall be performed on each day that clinical films are processed before any clinical films are processed that day. The test shall include an assessment of base plus fog density, mid-density, and density difference, using the mammography film used clinically at the facility.

1. The base plus fog density shall be below plus 0.03 of the established operating level.
2. The mid-density shall be within plus or minus 0.15 of the established operating level.
3. The density difference shall be within plus or minus 0.15 of the established operating level.

(2) Weekly quality control tests. Facilities with screen-film systems shall perform an image quality evaluation test, using an FDA-approved phantom, at least weekly.

1. The optical density of the film at the center of an image of a standard FDA-accepted phantom shall be at least 1.20 when exposed under a typical clinical condition.
2. The optical density of the film at the center of the phantom image shall not change by more than plus or minus 0.20 from the established operating level.
3. The phantom image shall achieve at least the minimum score established by the accreditation body and accepted by the FDA.
4. The density difference between the background of the phantom and an added test object used to assess image contrast shall be measured and shall not vary by more than plus or minus 0.05 from the established operating level.

(3) Quarterly quality control tests. Facilities with screen-film systems shall perform the following quality control tests at least quarterly:

- Fixer retention in film. The residual fixer shall be no more than 5 micrograms per square centimeter.

(4) Semiannual quality control tests. Facilities with screen-film systems shall perform the following quality control tests at least semiannually:

1. Darkroom fog. The optical density attributable to darkroom fog shall not exceed 0.05 when a mammography film of the type used in the facility, which has a mid-density of no less than 1.2 OD, is exposed to typical darkroom conditions for two minutes while such film is placed on the countertop emulsion side up. If the darkroom has a safelight used for mammography film, it shall be on during this test.
2. Screen-film contact. Testing for screen-film contact shall be conducted using 40 mesh copper screen. All cassettes used in the facility for mammography shall be tested.
3. Compression device performance. The maximum compression force for the initial power drive shall be between 25 pounds (111 newtons) and 45 pounds (200 newtons).

(5) Annual quality control tests. Facilities with screen-film systems shall perform the following quality control tests at least annually:

1. Automatic exposure control (AEC) performance.

- The AEC shall be capable of maintaining film optical density (OD) within plus or minus 0.15 of the mean optical density when thickness of a homogenous material is varied over a range of 2 to 6

centimeters and the kVp is varied appropriately for such thicknesses over the kVp range used clinically in the facility.

- The optical density of the film in the center of the phantom image shall not be less than 1.20.

2. kVp accuracy and reproducibility.

- The kVp shall be accurate within plus or minus 5 percent of the indicated or selected kVp at the lowest clinical kVp that can be measured by a kVp test device, the most commonly used clinical kVp, and the highest available clinical kVp.
- At the most commonly used clinical settings of kVp, the coefficient of variation of reproducibility of the kVp shall be equal to or less than 0.02.

3. Focal spot condition. Facilities shall evaluate focal spot condition only by determining the system resolution.

- Each X-ray system used for mammography, in combination with the mammography screen-film combination used in the facility, shall provide a minimum resolution of 11 cycles/millimeters (mm) (line-pairs/mm) when a high contrast resolution bar test pattern is oriented with the bars perpendicular to the anode-cathode axis, and a minimum resolution of 13 line-pairs/mm when the bars are parallel to that axis.
- The bar pattern shall be placed 4.5 centimeters above the breast support surface, centered with respect to the chest wall edge of the image receptor, and with the edge of the pattern within 1 centimeter of the chest wall edge of the image receptor.
- When more than one target material is provided, the measurement above shall be made using the appropriate focal spot for each target material.
- When more than one SID is provided, the test shall be performed at the SID most commonly used clinically.
- Test kVp shall be set at the value used clinically by the facility for a standard breast and shall be performed in the AEC mode, if available. If necessary, a suitable absorber may be placed in the beam to increase exposure times. The screen-film cassette combination used by the facility shall be used to test for this requirement and shall be placed in the normal location used for clinical procedures.
- Focal spot dimensions. Measured values of the focal spot length (dimension parallel to the anode-cathode axis) and width (dimension perpendicular to the anode-cathode axis) shall be within tolerance limits specified in Table 1.

Table 1

Focal Spot Tolerance Limit Nominal Focal Spot Size (mm)	Maximum Measured Dimensions Width (mm)	Length (mm)
0.10	0.15	0.15
0.15	0.23	0.23
0.20	0.30	0.30
0.30	0.45	0.65
0.40	0.60	0.85
0.60	0.90	1.30

4. Beam quality and half-value layer (HVL). The HVL shall meet the specification of 41.1(4) and 41.1(6) for the minimum HVL. These values, extrapolated to the mammographic range, are shown in Table 2. Values not shown in Table 2 may be determined by linear interpolation or extrapolation.

Table 2

X-ray Tube Voltage (kilovolt peak) and Minimum HVL Designed Operating Range (kV) Below 50	
Measured Operating Voltage (kV)	Minimum HVL (millimeters of aluminum)
20	0.20
25	0.25
30	0.30

5. Breast entrance air kerma and AEC reproducibility. The coefficient of variation for both air kerma and mAs shall not exceed 0.05.

6. Dosimetry. The average glandular dose delivered during a single cranio-caudal view of an FDA-accepted phantom simulating a standard breast shall not exceed 0.3 rad (3.0 milligray (mGy)) per exposure. The dose shall be determined with technique factors and conditions used clinically for a standard breast.

7. X-ray field/light field/image receptor/compression paddle alignment.

- All systems shall have beam-limiting devices that allow the entire chest wall edge of the X-ray field to extend to the chest wall edge of the image receptor and provide means to ensure that the X-ray field does not extend beyond any edge of the image receptor by more than 2 percent of the SID.
- The chest wall edge of the compression paddle shall not extend beyond the chest wall edge of the image receptor by more than 1 percent of the SID when tested with the compression paddle placed above the breast support surface at a distance equivalent to standard breast thickness. The shadow of the vertical edge of the compression paddle shall be not be visible on the image.

8. Uniformity of screen speed. Uniformity of screen speed of all the cassettes in the facility shall be tested and the difference between the maximum and minimum optical densities shall not exceed 0.30. Screen artifacts shall also be evaluated during this test.

9. System artifacts. System artifacts shall be evaluated with a high-grade, defect-free sheet of homogeneous material large enough to cover the mammography cassette and shall be performed for all cassette sizes used in the facility using a grid appropriate for the cassette size being tested. System artifacts shall also be evaluated for all available focal spot sizes and target filter combinations used clinically.

10. Radiation output.

- The system shall be capable of producing a minimum output of 800 milliRoentgen (mR) per second (7.0 mGy air kerma per second) when operating at 28 kVp in the standard (moly/moly) mammography mode at any SID where the system is designed to operate and when measured by a detector with its center located 4.5 centimeters above the breast support surface with the compression paddle in place between the source and the detector.
- The system shall be capable of maintaining the required minimum radiation output averaged over a 3.0 second period.

11. Decompression. If the system is equipped with a provision for automatic decompression after completion of an exposure or interruption of power to the system, the system shall be tested to confirm that it provides:

- An override capability to allow maintenance of compression;
- A continuous display of the override status; and
- A manual emergency compression release that can be activated in the event of power or automatic release failure.

(6) Quality control tests—other modalities. For systems with image receptor modalities other than screen-film, the quality assurance program shall be substantially the same as the quality assurance program recommended by the image receptor manufacturer, except that the maximum allowable dose shall not exceed the maximum allowable dose for screen-film systems in 41.6(5)*"k"*(5)"6."

(7) Use of test results.

1. After completion of the tests specified in 41.6(5)*"k,"* the facility shall compare the test results to the corresponding specified action limits; or, for non-screen-film modalities, to the manufacturer's recommended action limits; or, for post-move, preexamination testing of mobile units, to the limits established in the test method used by the facility.

2. If the test results fall outside the action limits, the source of the problem shall be identified, and corrective actions shall be taken before any further examinations are performed or any films are processed using the component of the mammography system that failed the test, if the failed test was that described in 41.6(5)*"k."*

3. Full field digital unit corrective actions shall be made as prescribed in the appropriate manufacturer's quality control manual or in accordance with the appropriate FDA-approved alternative requirements.

(8) Surveys.

1. At least once a year, each facility shall undergo a survey by a medical physicist or by an individual under the direct supervision of a medical physicist. At a minimum, this survey shall include the performance of tests to ensure that the facility meets the quality assurance requirements of the annual tests described in 41.6(5)*"k"*(5) and (6), the weekly phantom image quality test described in 41.6(5)*"k"*(2) and the quarterly retake analysis results described in 41.6(5)*"h."*

2. The results of all tests conducted by the facility in accordance with 41.6(5)*"k"*(1) through (7) for film-screen units, as well as written documentation of any corrective actions taken and their results, shall be evaluated for adequacy by the medical physicist performing the survey. Surveys of full field digital mammography units shall be conducted as described in the appropriate manufacturer's quality control manual. The results of the tests, any corrective actions taken and their results shall be evaluated for adequacy by the medical physicist performing the survey.

3. The medical physicist shall prepare a survey report that includes a summary of this review and recommendations for necessary improvements.

4. The survey report shall be sent to the facility within 30 days of the date of the survey.

5. The survey report shall be dated and signed by the medical physicist performing or supervising the survey. If the survey was performed entirely or in part by another individual under the direct supervision of the medical physicist, that individual and the part of the survey that individual performed shall also be identified in the survey report.

(9) Mammography equipment evaluations. Additional evaluations of mammography units or image processors or any other applicable mammography system ancillary parts shall be conducted at new installations, at disassembly, at reassembly, at the same or a new location, or when major components are changed or repaired. These evaluations shall be used to determine whether the new or changed equipment meets the requirements of applicable standards in 41.6(5) and 41.6(6). All problems shall be corrected before the new or changed equipment is put into service for examinations or film processing. The mammography equipment evaluation shall be performed by a medical physicist or by an individual under the direct supervision of an Iowa-approved medical physicist.

(10) Facility cleanliness.

1. The facility shall establish and implement adequate protocols for maintaining darkroom, screen, and viewbox cleanliness.

2. The facility shall document that all cleaning procedures are performed at the frequencies specified in the protocols.

(11) Calibration of air kerma measuring instruments. Instruments used by medical physicists in their annual survey to measure the air kerma or air kerma rate from a mammography unit shall be calibrated at least once every two years and each time the instrument is repaired. The instrument calibration must be traceable to a national standard and calibrated with an accuracy of plus or minus 6 percent (95 percent confidence level) in the mammography energy range.

(12) Infection control. Facilities shall establish and comply with a system specifying procedures to be followed by the facility for cleaning and disinfecting mammography equipment after contact with blood or other potentially infectious materials. This system shall specify the methods for documenting facility compliance with the infection control procedures established and shall:

1. Comply with all applicable federal, state, and local regulations pertaining to infection control; and

2. Comply with the manufacturer's recommended procedures for the cleaning and disinfecting of the mammography equipment used in the facility; or

3. If adequate manufacturer's recommendations are not available, comply with generally accepted guidance on infection control, until such recommendations become available.

l. Mammography procedures and techniques for mammography of patients with breast implants.

(1) Each facility shall have a procedure to inquire whether or not the patient has breast implants prior to the actual mammographic examination.

(2) Except where contraindicated, or unless modified by a physician's directions, patients with breast implants undergoing mammography shall have mammographic views to maximize the visualization of breast tissue.

m. Consumer complaint mechanism. Each facility shall:

(1) Establish a written and documented system for collecting and resolving consumer complaints;

(2) Maintain a record of each serious complaint received by the facility for at least three years from the date the complaint was received;

(3) Provide the consumer with adequate directions for filing serious complaints with the facility's accreditation body and any other appropriate regulatory entity if the facility is unable to resolve a serious complaint to the consumer's satisfaction.

(4) Report unresolved serious complaints to the accreditation body in a manner and time frame specified by the accreditation body.

n. Clinical image quality. Clinical images produced by any certified facility must continue to comply with the standards for clinical image quality established by that facility's accreditation body.

o. Additional mammography review and patient notification.

(1) If the agency believes that mammography quality at a facility has been compromised and may present a serious risk to human health, the facility shall provide clinical images and other relevant information, as specified by the agency, for review by the accreditation body or other entity designated by the agency. This additional mammography review will help the agency to determine whether the facility is in compliance with rule 641—41.6(136C) and, if not, whether there is a need to notify affected patients, their physicians, or the public that the reliability, clarity, and accuracy of interpretation of mammograms has been compromised.

(2) If the agency determines that any activity related to the provision of mammography at a facility may present a serious risk to human health such that patient notification is necessary, the facility shall notify patients or their designees, their physicians, or the public of action that may be taken to minimize the effects of the risk. Such notification shall occur within a time frame and a manner specified by the agency.

41.6(6) *Equipment standards.* The equipment used to perform mammography shall meet the following standards:

a. Design: Be specifically designed for mammography. This prohibits systems that have been modified or equipped with special attachments for mammography.

b. Performance standards: Meet the Food and Drug Administration (FDA) performance standards for diagnostic X-ray systems and their major components found in 21 CFR 1020.30 and FDA standards for radiographic equipment in 21 CFR 1020.31.

c. Image receptor systems: Have image receptor systems and individual components which are appropriate for mammography and used according to the manufacturer's recommendations.

(1) Systems using screen-film image receptors shall provide, at a minimum, for operation for image receptors of 18 × 24 centimeters and 24 × 30 centimeters.

(2) Systems using screen-film image receptors shall be equipped with moving grids matched to all image receptor sizes provided.

(3) Systems used for magnification procedures shall be capable of operation with the grid removed from between the source and image receptor.

d. Light fields: For any system with a light beam that passes through the X-ray beam-limiting device, the light shall provide an average illumination of not less than 160 lux (15 foot candles) at 100 centimeters or the maximum source-image receptor distance (SID), whichever is less.

e. Magnification:

(1) Systems used to perform noninterventional problem-solving procedures shall have radiographic magnification capability available for use by the operator.

(2) Systems used for magnification procedures shall provide, at a minimum, at least one magnification value within the range of 1.4 to 2.0.

f. Tube-image receptor assembly:

(1) The assembly shall be capable of being fixed in any position where it is designed to operate. Once fixed in any such position, it shall not undergo unintended motion.

(2) The mechanism ensuring compliance with this subrule shall not fail in the event of power interruption.

g. Film/screen contact: Shall check film/screen contact when cassettes are first placed into use and semiannually thereafter.

h. Focal spot: The focal spot size, magnification factor and source to image receptor distance (SID) shall be appropriate for mammography and in the ranges shown below:

SID	Nominal Focal Spot Size
> 65 cm	< or = to 0.6 mm
50 to 65 cm	< or = to 0.5 mm
< 50 cm	< or = to 0.4 mm

(1) When more than one focal spot is provided, the system shall indicate, prior to exposure, which focal spot is selected.

(2) When more than one target material is provided, the system shall indicate, prior to exposure, the preselected target material.

(3) When the target material or focal spot, or both, is selected by a system algorithm that is based on the exposure or on a test exposure, the system shall display, after the exposure, the target material or focal spot, or both, actually used during the exposure.

i. Compression devices: Shall have compression devices parallel to the imaging plane and able to immobilize and compress the breast with a force of at least 25 pounds per square inch and shall be capable of maintaining this compression for at least three seconds. Effective October 28, 2002, each system shall provide:

(1) An initial power-driven compression activated by hands-free controls operable from both sides of the patient; and

(2) Fine adjustment compression controls operable from both sides of the patient.

(3) Systems shall be equipped with different sized compression paddles that match the sizes of all full field image receptors provided for the system. Compression paddles for special purposes, including those smaller than the full size of the image receptor (for "spot compression"), may be provided. Such compression paddles for special purposes are not subject to 41.6(6)*"i"*(6) and (7).

(4) Except as provided in 41.6(6)*"i"*(5), the compression paddle shall be flat and parallel to the breast support table and shall not deflect from parallel by more than 1.0 cm at any point on the surface of the compression paddle when compression is applied.

(5) Equipment intended by the manufacturer's design not to be flat and parallel to the breast support table during compression shall meet the manufacturer's design specifications and maintenance requirements.

(6) The chest wall edge of the compression paddle shall be straight and parallel to the edge of the image receptor.

(7) The chest wall edge may be bent upward to allow for patient comfort but shall not appear on the image.

j. Grids: Shall have the capability for using antiscatter grids.

k. AEC: Shall have automatic exposure control such that:

(1) Each screen-film system shall provide an AEC mode that is operable in all combinations of equipment configuration provided, e.g., grid, nongrid; magnification, nonmagnification; and various target-filter combinations.

(2) The positioning or selection of the detector shall permit flexibility in the placement of the detector under the target tissue.

- The size and available positions of the detector shall be clearly indicated at the X-ray input surface of the breast compression paddle.
- The selected position of the detector shall be clearly indicated.

(3) The system shall provide means for the operator to vary the selected optical density from the normal (zero) setting.

l. Control panel: Shall have a control panel that:

(1) Gives a positive indication when X-rays are being produced.

(2) Gives an audible signal indicating termination of exposure.

(3) Has manual selection of milliampere seconds (mAs) or at least one of its component parts (milliampere (mA) or time, or both).

(4) Has the technique factors (peak tube potential in kilovolts (kV) and either tube current in mA and exposure time in seconds or the product of tube current and exposure time in mAs) to be used during an exposure indicated before the exposure begins, except when AEC is used, in which case the technique factors that are set prior to the exposure shall be indicated.

(5) Has a system that, following AEC mode use, shall indicate the actual kilovoltage peak (kVp) and mAs used during the exposure.

m. mAs: Shall indicate, or provide a means of determining, the mAs resulting from each exposure made with automatic exposure control.

n. Viewboxes: Shall have a viewbox that is checked periodically to ensure optimal conditions. When the mammogram is placed on the viewbox, the area surrounding the film must be masked to exclude extraneous light which may reduce image contrast.

o. X-ray film: Shall use X-ray film that has been designated by the film manufacturer as appropriate for mammography and that is matched to the screen's spectral output as specified by the manufacturer.

p. Intensifying screens: Shall use intensifying screens that have been designated by the screen manufacturer as appropriate for mammography.

q. Chemicals: Shall use chemical solutions for processing mammography films that are capable of developing the films in a manner equivalent to the minimum requirements specified by the film manufacturer.

r. Hot-lights: Shall make special lights for film illumination, i.e., hot-lights, capable of producing light levels greater than that provided by the viewbox, available to the interpreting physicians.

s. Masking devices: Shall ensure that film masking devices that can limit the illuminated area to a region equal to or smaller than the exposed portion of the film are available to all interpreting physicians interpreting for the facility.

t. Mobile units and vans—film-screen.

(1) A phantom image shall be produced, processed, and evaluated after each relocation and prior to examinations being conducted.

(2) If processing is not available, a check of the radiation output shall be made and compared to a preset standard for quality. Equipment shall be recalibrated as necessary to maintain quality of phantom image.

u. Mobile units and vans—full field digital. Appropriate manufacturer's quality control manual procedures and criteria shall be met.

41.6(7) *Safety standards for mammography equipment.*

a. Proper safety precautions shall be maintained and shall include, but not be limited to, adequate shielding for patients, personnel, and facilities. The equipment shall be operated only from a shielded position.

b. Equipment operators shall be monitored in accordance with 641—40.37(136C).

c. Annual inspections shall be conducted by an inspector from the agency to ensure compliance with these rules. Identified hazards shall be promptly corrected.

d. Equipment shall be shockproof and grounded to protect against electrical hazards.

e. Records of all inspections, reports, and consultations shall be maintained for at least seven years.

RULE 641—41.6(136C)—APPENDIX I
Rescinded IAB 4/5/00, effective 5/10/00

RULE 641—41.6(136C)—APPENDIX II
Glandular Dose (in mrad) for 1 Roentgen Entrance Exposure
4.5-cm Breast Thickness—50% Adipose/50% Glandular Breast Tissue*

	Mo/Mo Target Filter X-Ray Voltage (kVp)											W/Al Target Filter Combination
HVL	23	24	25	26	27	28	29	30	31	32	33	
0.23	109											
0.24	113	116										
0.25	117	120	122									
0.26	121	124	126	128								
0.27	126	128	130	132	134							
0.28	130	132	134	136	138	139						
0.29	135	137	139	141	142	143	144					
0.30	139	141	143	145	146	147	148	149				170
0.31	144	146	147	149	150	151	152	153	154			175
0.32	148	150	151	153	154	155	156	158	159	160	160	180
0.33	153	154	155	157	158	159	160	162	163	164	164	185
0.34	157	159	160	161	162	163	164	166	167	168	168	190
0.35		163	164	166	167	168	169	170	171	172	172	194
0.36			168	170	171	172	173	174	175	176	176	199
0.37				174	175	176	177	178	178	179	180	204
0.38					179	180	181	182	182	183	184	208
0.39						184	185	186	186	187	188	213
0.40							189	190	191	192	192	217
0.41								194	195	196	196	221
0.42										200	200	225
0.43											204	230
0.44												234
0.45												238

To convert from entrance exposure in air in Roentgen to mean glandular breast dose in millirads, multiply the entrance exposure by the factor shown in the table for the appropriate kVp and beam quality (HVL) combination. For example, a measured entrance exposure of 0.50 Roentgen from a Mo/Mo Target Filter system at 30 kVp with a measured HVL of 0.36-mm aluminum yields an average glandular dose of (0.50 R) × (174 mrad/R) = 87 mrad or 0.87 mGy.

*Wu X. Breast dosimetry in screen-film mammography. In: Barnes GT, Frey GD (eds), Screen film mammography: Imaging considerations and medical physics responsibilities. Madison, WI: Medical

Physics Publishing; 159-175, 1991. W/Al conversion factors are derived from fits to data from Stanton L et al. Dosage evaluation in mammography. Radiology 1984; 150:577-584.
[**ARC 1401C**, IAB 4/2/14, effective 5/7/14]

641—41.7(136C) X-ray machines used for stereotactically guided breast biopsy.

41.7(1) *Definitions.* In addition to the definitions provided in rules 641—38.2(136C), 641—40.2(136C), and 641—41.1(136C), the following definitions are applicable to this rule.

"Collaborative setting" means a setting in which a qualified radiologist and surgeon (under 41.7(3)*"a"* or 41.7(3)*"c"*) are working together in consultation and in performing stereotactically guided breast biopsies with a common goal of the patient's benefit.

"Procedure" means a stereotactically guided breast biopsy performed on a patient for diagnostic purposes.

"Qualified training physician" means a physician who is qualified under 41.7(3) to perform stereotactically guided breast biopsies and who has performed at least 24 procedures.

"Stereotactically guided breast biopsy" means a breast biopsy procedure performed with the utilization of a dedicated system which emits ionizing radiation and is designed specifically for that procedure.

"Supervising physician" means the physician designated by the facility/owner to:

1. Evaluate the equipment, personnel, procedures, and records annually; and
2. Establish and conduct the quality assurance program.

41.7(2) *Registration and application standards and requirements.*

a. Each radiation machine used to perform stereotactically guided breast biopsies shall be registered according to 641—subrule 39.3(2).

b. Each facility wishing to perform stereotactically guided breast biopsies shall apply to the agency for authorization by providing or verifying the following information for each machine:

(1) The stereotactically guided breast biopsy equipment and facility meet the general requirements of these rules for radiation machines.

(2) The radiation machine is specifically designed to perform stereotactically guided breast biopsies.

(3) The radiation machine is used according to these rules on patient radiation exposure and radiation dose levels.

(4) The radiation machine is operated by individuals meeting the requirements of this rule.

(5) The entire stereotactically guided breast biopsy system is evaluated annually by a medical physicist who meets the requirements of this rule.

(6) The equipment, personnel, procedures and records are evaluated annually by the supervising physician.

c. Suspension, revocation, or denial of authorization.

(1) Authorization may be suspended or revoked with cause if any machine does not meet one or more of the standards of these rules.

(2) The facility shall have an opportunity for a hearing in connection with a denial,suspension, or revocation of authorization.

(3) An emergency order suspending or revoking authorization may be issued if the agency finds the radiation machine or facility violates rules that seriously affect the health, safety and welfare of the public. An opportunity for hearing shall be held within 20 working days after the issuance of the order. The order shall be effective during the proceedings.

(4) If authorization is revoked, the radiation machine shall not be used until reinstated.

d. Reinstatement of authorization.

(1) An application for reinstatement shall be submitted and processed the same as an initial application.

(2) The agency shall inspect the radiation machine within 60 days of the approved reinstatement application. If the reinstatement is after a revocation, appropriate corrective action shall be submitted with the application.

(3) A full reinstatement shall be issued only after the agency has inspected the radiation machine and facility and determined that they meet the requirements of these rules.

e. Inspections. The agency shall conduct an inspection of each radiation machine no later than 14 months after initial authorization and at least annually thereafter.

41.7(3) *Physicians.* Physicians must be qualified according to the setting and their role in performing stereotactically guided breast biopsies as outlined below.

a. Requirements for a radiologist in a collaborative setting are as follows:

(1) Initial training and qualifications.

1. Must be qualified according to 41.6(3)*"a."*

2. Shall have performed at least 12 stereotactically guided breast biopsies prior to July 1, 1998, or at least 3 hands-on stereotactically guided breast biopsies under a physician who is qualified under 41.7(3) and has performed at least 24 stereotactically guided breast biopsies.

3. Shall have at least three hours of Category 1 CME or three hours of training approved by the agency in stereotactically guided breast biopsy.

4. Shall be responsible for mammographic interpretation, be experienced as noted in 41.7(3)*"a"*(1)"2" above and be experienced in the specific recommendations for each biopsy and lesion identification at time of each biopsy performed by that physician.

5. Shall be responsible for the supervision of the radiologic technologist during the procedure.

(2) Maintenance of proficiency and CME requirements.

1. Perform at least 12 stereotactically guided breast biopsies per year. If experience is not maintained, the physician must requalify by performing 3 procedures under direct supervision of a qualified training physician or an agency-approved manufacturer applications specialist before resuming unsupervised procedures.

2. Obtain at least three hours of Category 1 CME or three hours of training approved by the agency in stereotactically guided breast biopsy every 36 months. If education is not maintained, the physician must requalify by obtaining additional CME credits to reach 3 CME credits in the prior 36 months before resuming unsupervised procedures. These CMEs cannot be obtained by the performance of supervised procedures.

3. Continuing qualifications must be met and a current state of Iowa medical license must be in effect whenever procedures are performed independently by the physician.

b. Requirements for a physician other than a qualified radiologist in a collaborative setting are as follows:

(1) Initial training and qualifications.

1. Must be licensed to practice medicine in Iowa.

2. Must have at least three hours of Category 1 CME or three hours of training approved by the agency in stereotactically guided breast biopsy which includes instruction on triangulation for lesion location.

3. Must have performed at least 12 stereotactically guided breast biopsies prior to May 9, 2001, or at least 3 hands-on stereotactically guided breast biopsy procedures under a physician who is both qualified to perform stereotactic biopsy procedures according to 41.7(3) and has performed at least 24 stereotactically guided breast biopsies.

4. Shall be responsible for post-biopsy management of the patient.

5. Shall be responsible for supervision of the radiologic technologist during the procedure.

(2) Maintenance of proficiency and CME requirements.

1. Perform or participate in at least 12 stereotactically guided breast biopsies per year or requalify by performing 3 procedures under direct supervision of a qualified training physician or an agency–approved manufacturer applications specialist before resuming unsupervised procedures.

2. Obtain at least three hours of Category 1 CME or three hours of training approved by the agency in stereotactically guided breast biopsy every 36 months. If education is not maintained, the physician must requalify by obtaining additional CME credits to reach 3 CME credits in the prior 36 months before resuming unsupervised procedures. These CMEs cannot be obtained by the performance of supervised procedures.

3. Continuing qualifications must be met and a current state of Iowa medical license must be in effect whenever unsupervised procedures are performed by the physician.

c. Requirements for a radiologist performing stereotactically guided breast biopsy independently are as follows:

(1) Initial training and requirements.

1. Must be qualified according to 41.6(3)*"a."*

2. Initially, must have at least three hours of Category 1 CME or three hours of training approved by the agency in stereotactically guided breast biopsy.

3. Initially, must obtain at least 15 hours of CME in breast imaging including benign and malignant breast diseases.

4. Must have performed at least 12 stereotactically guided breast biopsies prior to July 1, 1998, or at least 3 hands-on stereotactically guided breast biopsy procedures under a physician who is both qualified according to 41.7(3) and has performed at least 24 stereotactically guided breast biopsies.

5. Must be responsible for mammographic interpretation.

6. Must be responsible for patient selection.

7. Must be responsible for the supervision of the radiologic technologist during the procedure.

8. Must be responsible for post-biopsy management of the patient which may include referral to a surgeon for a follow-up on certain lesions.

(2) Maintenance of proficiency and CME requirements.

1. Perform at least 12 stereotactically guided breast biopsies per year or requalify by performing 3 procedures under direct supervision of a qualified training physician or an agency-approved manufacturer applications specialist.

2. Obtain at least three hours of Category 1 CME or three hours of training approved by the agency in stereotactically guided breast biopsy every 36 months which includes post-biopsy management of the patient. If education is not maintained, the physician must requalify by obtaining additional CME credits to reach 3 CME credits in the prior 36 months before resuming unsupervised procedures. These CMEs cannot be obtained by the performance of supervised procedures.

3. Continuing qualifications must be met and a current state of Iowa medical license must be in effect whenever unsupervised procedures are performed by the physician.

d. Requirements for a physician other than a qualified radiologist (under 41.7(3)*"c"*) performing stereotactically guided breast biopsy independently are as follows:

(1) Initial training and requirements.

1. Must be licensed to practice medicine in Iowa.

2. Must have evaluated at least 480 mammograms in the prior 24 months in consultation with a physician who is qualified according to 41.6(3)*"a."*

3. Initially, must have at least 15 hours of Category 1 CME or 15 hours of training approved by the agency in stereotactically guided breast imaging and biopsy or three years' experience having performed at least 36 stereotactically guided breast biopsies.

4. Must have four hours of Category 1 CME in medical radiation physics.

5. Must have performed at least 12 stereotactically guided breast biopsies prior to May 9, 2001, or at least 3 hands-on stereotactically guided breast biopsy procedures under a physician who is both qualified according to 41.7(3) and has performed at least 24 stereotactically guided breast biopsies.

6. Must be responsible for patient selection.

7. Must be responsible for the supervision of the radiologic technologist during the procedure.

8. Must be responsible for post-biopsy management of the patient.

(2) Maintenance of proficiency and CME requirements.

1. Continue to evaluate at least 480 mammograms every 24 months in consultation with a physician who is qualified according to 41.6(3)*"a."*

2. Perform at least 12 stereotactically guided breast biopsies per year or requalify by performing 3 procedures under direct supervision of a qualified training physician or an agency-approved manufacturer applications specialist.

3. Obtain at least three hours of Category 1 CME or three hours of training approved by the agency in stereotactically guided breast biopsy every 36 months. If education is not maintained, the physician must requalify by obtaining additional CME credits to reach 3 CME credits in the prior 36 months before resuming unsupervised procedures. The CME credits for requalification cannot be obtained by performing procedures.

4. Continuing qualifications must be met and a current state of Iowa medical license must be in effect whenever unsupervised procedures are performed by the physician.

41.7(4) *Medical physicist.*

a. Must be qualified according to 41.6(3)*"c."*

b. Must have performed three hands-on stereotactically guided breast biopsy system physics surveys prior to July 1, 1998; or one hands-on stereotactically guided breast biopsy system physics survey under the guidance of a medical physicist qualified through 41.7(4)*"a"* and 41.7(4)*"b."*

c. Maintenance of proficiency and continuing education requirements.

(1) Have performed at least one stereotactically guided breast biopsy system physics survey per year after the initial qualifications are met or requalify by performing one survey supervised by a qualified medical physicist; and

(2) Following the third anniversary in which the requirements of this subrule were met, have obtained at least three hours of continuing education in stereotactically guided breast biopsy system physics during the previous 36 months or requalify by obtaining additional CME credits to reach 3 CME credits in the prior 36 months.

41.7(5) *Radiologic technologist.*

a. Must be qualified according to 41.6(3)*"b."*

b. Must meet the following initial requirements:

(1) Five hands-on stereotactically guided breast biopsy procedures on patients under the supervision of a physician or technologist qualified under rule 641—41.7(136C).

(2) Three hours of continuing education in stereotactically guided breast biopsy. The required continuing education cannot be obtained through the performance of supervised stereotactically guided breast biopsy procedures.

c. Maintenance of proficiency and continuing education and experience requirements.

(1) Following the first anniversary in which the requirements of this subrule were met, have performed at least 12 stereotactically guided breast biopsies per year or requalify by performing 3 stereotactically guided breast biopsies under the supervision of a physician or radiologic technologist qualified under 41.7(3) or 41.7(5).

(2) Following the third anniversary in which the requirements of this subrule were met, have at least three hours of continuing education in stereotactically guided breast biopsy system physics during the previous 36 months or requalify by obtaining additional CME credits to reach 3 CME credits in the prior 36 months. The CMEs cannot be obtained by the performance of supervised procedures.

(3) If a stereotactic radiologic technologist performs only stereotactic procedures, the radiologic technologist must perform at least 100 stereotactic procedures during the prior 24 months.during the 24-month period ending on the last day of the previous calendar quarter, or any 24-month period between the two. In this case, all requirements for radiologic technologists must be met with the exception of 41.6(3)*"b"*(4)"1."

(4) Only 50 percent of the total required stereotactic continuing education hours may be obtained through presenting or acting as a trainer for a continuing education or training program.

41.7(6) *Obtaining and preserving records.*

a. The facility must make, for each procedure, a record of the service provided including:

(1) The date of the procedure.

(2) The name of the patient and one additional patient identifier.

(3) The name of the radiologic technologists and physicians performing the procedure.

(4) A description of the service provided.

(5) The name of the referring physician, if any.

b. Records retained by the medical facility must be retained for at least ten years.

41.7(7) *Quality assurance program.*

a. The facility shall have an equipment quality assurance program specific to stereotactically guided breast biopsy systems and covering all components of the system to ensure high-quality images with minimum patient exposure.

b. The facility shall ensure that a general review of the program is conducted at least annually and have available the services of a qualified medical physicist who is capable of establishing and conducting the program.

c. The facility shall name a supervising stereotactic biopsy physician who shall be responsible for:

(1) Quality assurance activities including the medical audit,

(2) Oversight of the quality control program, and

(3) Supervision of the radiologic technologist(s) and the medical physicist.

d. Under the direction of the supervising physician, the medical physicist shall have the responsibility for establishing and conducting the equipment quality assurance program. The program shall include:

(1) Conducting equipment performance monitoring functions, initially and then at least annually, to include:

1. Evaluation of biopsy unit assembly. Any failed items must be corrected within 30 days of the survey unless the medical physicist deems that the failure poses a serious injury risk to the patient, at which time the failure needs to be corrected before further procedures are performed.

2. Collimation.

- Digital – X-ray field must not extend beyond the image receptor by more than 5 mm on any side.
- Film-screen – On all sides other than the chest wall side, the X-ray field must be within the image receptor. The chest wall side must not extend beyond the image receptor by more than 2 percent.
- Any failures must be corrected within 30 days of the survey.

3. Evaluation of focal spot.

- Digital – Focal spot must not degrade from initial measurement. If reduction in lp/mm is found, focal spot must be corrected within 30 days of survey.
- Film-screen – Film-screen must show 13 lp/mm parallel to the anode-cathode axis and 11 lp/mm perpendicular to the anode-cathode axis. Failure to meet the performance criteria must be corrected within 30 days of survey.

4. kVp accuracy/reproducibility. kVp accuracy/reproducibility must be accurate to within +/- 5% of nominal kVp setting. Failures must be corrected before further procedures are performed.

5. Half-value layer measurement. HVL shall be greater than kVp/100 (in units of mm Al). Failures must be corrected before further procedures are performed.

6. Exposure reproducibility. Exposure must be reproducible to within +/- 15% of mean exposure. Failures must be corrected before further procedures are performed.

7. Breast entrance exposure, average glandular dose. Average glandular dose must be less than 300 millirad (3 milliGray) per exposure of a 50 percent glandular/50 percent adipose 4.5 centimeter breast. Failures must be corrected before further procedures are performed.

8. Image quality evaluation.

- Digital – Phantom image must meet the criteria of 5 fibers, 4 speck groups and 3 masses for the ACR accreditation phantom or 3 fibers, 3 speck groups and 2.5 masses for the mini phantom unless otherwise stated by the phantom manufacturer.
- Film-screen – Phantom image must meet the criteria of 4 fibers, 3 speck groups and 3 masses for the ACR phantom or 2 fibers, 2 speck groups and 2 masses for the mini phantom unless otherwise stated by the phantom manufacturer. The background density must be within +/- .20 of the established aim, and the density differences must be within +/- .05 of the established aim.
- Failures must be corrected before further procedures are performed.

9. Artifact evaluation. Any significant black or white artifacts seen in the image detector field must be corrected within 30 days of the survey.

10. Digital field uniformity. For units with region of interest (ROI) capability, the SNR in each corner must be within +/- 15% of the SNR in the center. Failures must be corrected within 30 days of the survey.

11. Localization simulation (gelatin phantom) test. Localization accuracy must be within 1 mm of target, and the test must include a portion of the test "lesion" in the sample chamber. Failures must be corrected before further procedures are performed.

(2) Analyzing the monitoring results to determine if there are any problems requiring correction.

(3) Ensuring that the facility has procedures in place for carrying out or arranging for the necessary corrective actions as well as for the calibrations and other preventative maintenance.

e. The supervising physician shall have the responsibility for establishing and conducting the quality control program in a facility with a fixed unit. In the case of a mobile stereotactic unit, the owner or designee shall assume the responsibility for establishing and conducting the quality assurance program. The program shall include:

(1) Localization accuracy (daily before use and before using the localization unit after it is adjusted). Each coordinate must be within manufacturer specifications for the intended target value. Failures must be corrected before further procedures are performed.

(2) Visual checklist (monthly). Any failed items must be corrected within 30 days.

(3) Phantom image (weekly). Phantom image must meet the criteria of 5 fibers, 4 speck groups and 3 masses for the ACR accreditation phantom or 3 fibers, 3 speck groups and 2.5 masses for the mini phantom unless otherwise stated by the phantom manufacturer. Failures must be corrected before further procedures are performed.

(4) Compression (semiannually). The maximum auto drive compression force shall not exceed 45 pounds. Failures must be corrected within 30 days.

(5) Any additional quality control testing indicated by the stereotactic breast biopsy unit manufacturer must be completed as outlined in the quality control manual applicable to the unit.

f. Each facility shall establish a medical audit program to ensure the accuracy and appropriateness of the procedures performed. This program shall include an imaging-pathology correlation for each biopsy performed, an ongoing analysis of biopsy results and periodic review of the utilization of the procedure. The program must include the number of biopsies performed, the number of cancers found, the number of benign lesions found, and the number of biopsies repeated.

g. Additional medical physicist evaluations of stereotactic units shall be conducted whenever a new unit is installed, a unit is disassembled and reassembled at the same or a new location, or major components of a stereotactic unit are changed or repaired. These evaluations shall be used to determine whether the new or changed equipment meets the requirements of applicable standards in 41.7(7). All problems shall be corrected before the new or changed equipment is put into service for examinations. The stereotactic equipment evaluation shall be performed by a medical physicist qualified under 41.7(4) or by an individual under the direct supervision of a medical physicist qualified under 41.7(4).

41.7(8) *Equipment standards.*

a. Be specifically designed for stereotactically guided breast biopsy.

b. Meet the Food and Drug Administration (FDA) standards found in 21 CFR.

41.7(9) *Safety standards.*

a. Proper safety precautions shall be maintained and shall include, but not be limited to, adequate shielding for patients, personnel and facilities. The equipment shall be operated only from a shielded position.

b. Equipment operators shall wear personnel monitors to monitor their radiation exposure.

c. Annual inspections shall be conducted by an inspector from the agency to ensure compliance with these rules. Identified hazards shall be promptly corrected.

d. Equipment shall be shockproof and grounded to protect against electrical hazards.

e. Records of all inspections, reports and consultations shall be maintained for at least seven years.

This rule is intended to implement Iowa Code chapter 136C.

[**ARC 1401C**, IAB 4/2/14, effective 5/7/14]

CHAPTER 41—APPENDIX A

INFORMATION ON RADIATION SHIELDING REQUIRED FOR PLAN REVIEWS (EXCLUDING THERAPY MACHINES)

In order for the agency to provide an evaluation and verification that national standards have been met on shielding requirements for a radiation installation, the following information shall be submitted.

1. The plans should show, as a minimum, the following:

(a) The normal location of the X-ray system's radiation port; the port's travel and traverse limits; general direction(s) of the useful beam; locations of any windows and doors; the location of the operator's booth; and the location of the X-ray control panel.

(b) The structural composition and thickness or lead equivalent of all walls, doors, partitions, floor, and ceiling of the room(s) concerned.

(c) The dimensions of the room(s) concerned.

(d) The type of occupancy of all adjacent areas inclusive of space above and below the room(s) concerned. If there is an exterior wall, show distance to the closest area(s) where it is likely that individuals may be present.

(e) The make and model of the X-ray equipment, the energy waveform (single phase, three phase, etc.) and the maximum technique factors.

(f) The type of examination(s) or treatment(s) which will be performed with the equipment.

2. Information on the anticipated workload of the X-ray system(s) in mA-minutes per week.

3. If the services of a qualified expert have been utilized to determine the shielding requirements, a report, including all basic assumptions used, shall be submitted with the plans.

CHAPTER 41—APPENDIX B

DESIGN REQUIREMENTS FOR AN OPERATOR'S BOOTH

1. Space requirements:

(a) The operator shall be allotted not less than 7.5 square feet (0.697 m) of unobstructed floor space in the booth.

(b) The operator's booth may be any geometric configuration with no dimension of less than 2 feet (0.61 m).

(c) The space shall be allotted excluding any encumbrance by the X-ray control panel, such as overhang, cables, or other similar encroachments.

(d) The booth shall be located or constructed such that unattenuated direct scatter radiation originating on the examination table or at the wall cassette will not reach the operator's station in the booth.

2. Structural requirements:

(a) The booth walls shall be permanently fixed barriers of at least 7 feet (2.13 m) high.

(b) When a door or movable panel is used as an integral part of the booth structure, it must have an interlock which will prevent an exposure when the door or panel is not closed.

(c) Shielding shall be provided to meet the requirements of 641—Chapter 40.

3. X-ray control placement:

The X-ray control for the system shall be fixed within the booth; and

(a) Shall be at least 40 inches (1.02 m) from any point subject to direct scatter, leakage or primary beam radiation.

(b) Shall allow the operator to use the majority of the available viewing windows or mirrors.

4. Viewing system requirements:

(a) Each booth shall have at least one viewing device which will:

(1) Be so placed that the operator can view the patient during any exposure, and

(2) The device shall be so placed that the operator can have full view of any occupant of the room and should be so placed that the operator can view any entry into the room. If any door which allows access to the room cannot be seen from the booth, then outside that door there shall be an "X-ray" warning sign that will be lighted anytime the rotor of the X-ray tube is activated. Alternatively, that door must have an interlock controlling the exposure which will prevent the exposure if the door is not closed.

(b) When the viewing system is a window, the following requirements also apply:

(1) The viewing area shall be at least 1 square foot (0.0929 m^2).

(2) Regardless of size or shape, at least 0.09 m^2 (1 sq ft) of window area must be centered no less than 0.6 m (2 feet) from the open edge of the booth and no less than 1.5 m (5.0 feet) from the floor.

(3) The material constituting the window shall have the same lead equivalence as that required in the booth's wall in which it is mounted.

(c) When the viewing system is by mirrors, the mirror(s) shall be so located as to accomplish the general requirements of Appendix B, 4(a).

(d) When the viewing system is by electronic means:

(1) The camera shall be so located as to accomplish the general requirements of Appendix B, 4(a), and

(2) There shall be an alternate viewing system as a backup for the primary system.

CHAPTER 41—APPENDIX C

INFORMATION TO BE SUBMITTED BY PERSONS PROPOSING TO CONDUCT HEALING ARTS SCREENING

Persons requesting that the agency approve a healing arts screening program shall submit the following information and evaluation:

1. Name and address of the applicant and, where applicable, the names and addresses of agents within this state.
2. Diseases or conditions for which the X-ray examinations are to be used in diagnoses.
3. A detailed description of the X-ray examinations proposed in the screening program.
4. Description of the population to be examined in the screening program, i.e., age, sex, physical condition, and other appropriate information. Any person conducting a screening program for cardiac scoring shall conduct screening only on either women over age 45 or men over age 50 who meet any two of the following criteria: family history, smoker, high blood pressure, high cholesterol, obesity (at least 20 pounds overweight), diabetes.
5. An evaluation of any known alternate methods not involving ionizing radiation which could achieve the goals of the screening program and why these methods are not used instead of the X-ray examinations.
6. An evaluation by a qualified expert of the X-ray system(s) to be used in the screening program. The evaluation by the qualified expert shall show that such system(s) does satisfy all requirements of these regulations. The evaluation shall include a measurement of patient exposures from the X-ray examinations to be performed.
7. A description of the diagnostic film quality control program.
8. A copy of the technique chart for the X-ray examination procedures to be used.
9. The qualifications of each individual who will be operating the X-ray system(s).
10. The qualifications of the individual who will be supervising the operators of the X-ray system(s). The extent of supervision and the method of work performance evaluation shall be specified.
11. The name and address of the physician who will interpret the radiograph(s) and a copy of the physician's license to practice in Iowa.
12. A description of the procedures to be used in advising the individuals screened and their private practitioners of the healing arts of the results of the screening procedure and any further medical needs indicated.
13. A description of the procedures for the retention or disposition of the radiographs and other records pertaining to the X-ray examinations.
14. An indication of the frequency of screening and the duration of the entire screening program.
15. Documentation justifying the reason for the screening. The applicant must submit data which supports the efficacy of the screening test in diagnosing the disease or condition being screened. Data which will be acceptable to the department includes, but is not limited to, the following: (1) the recommendation of a nationally recognized certifying medical or government body; (2) the recommendation of one of the following national organizations: American Cancer Association, American Lung Association, American Heart Association; or (3) medical literature from peer-reviewed journals supporting the screening.
16. The procedures for preventing pregnant individuals from participating in the screening or justification for allowing pregnant individuals to participate.
17. The dates of the screening to include beginning and ending dates.
18. A copy of IRB for a research project or information justifying the research project.

CHAPTER 41—APPENDIX D

QA for Therapeutic Radiation Machines

Frequency	Procedure	Tolerance[a]
Daily	Dosimetry	
	X-ray output constancy	3%
	Electron output constancy[b]	3%
	Mechanical	
	Localizing lasers	2mm
	Distance indicator (ODI)	2mm
	Safety	
	Door interlocks	functional
	Audiovisual monitors	functional
Monthly	Dosimetry	
	X-ray output constancy[c]	2%
	Electron output constancy[c]	2%
	Backup monitor constancy	2%
	X-ray central axis dosimetry parameter (PDD, TAR) constancy	2%
	Electron central axis dosimetry parameter constancy (PDD)	2mm @ therapeutic depth
	X-ray beam flatness constancy	2%
	Electron beam flatness constancy	3%
	X-ray and electron symmetry	3%
	Safety Interlocks	
	Wedge, electron cone interlocks	functional
	Mechanical	
	Light/radiation field coincidence	2mm or 1% on a side[d]
	Gantry/collimator angle indicators	1 degree
	Wedge position	2mm (or 2% change in transmission factor)
	Tray position	2mm
	Applicator position	2mm
	Field size indicators	2mm
	Cross-hair centering	2mm diameter
	Treatment couch position indicators	2mm/1deg
	Latching of wedges, blocking tray	functional
	Jaw symmetry[e]	2mm
	Field Light intensity	functional
Annual	Dosimetry	
	X-ray/electron output calibration constancy	2%
	Field size dependence of X-ray output constancy	2%

[a] The tolerances listed in the tables should be interpreted to mean that if a parameter either: (1) exceeds the tabulated value (e.g., the measured isocenter under the gantry exceeds 2 mm diameter); or (2) that the change in the parameter exceeds the nominal value (e.g., the output changes by more than 2%), then an action is required. The distinction is emphasized by the use of the term constancy for the latter case. Moreover, for constancy, percent values ± the deviation of the parameter with respect to its nominal value; distances are referenced to the isocenter or nominal SSD.

[b] All electron energies need not be checked daily, but all electron energies are to be checked at least twice weekly.

[c] A constancy check with a field instrument using temperature pressure corrections.

[d] Whichever is greater. Should also be checked after change of light field source.

[e] Jaw symmetry is defined as the difference in distance of each jaw from the isocenter.

Frequency	Procedure	Tolerance[a]
	Output factor constancy for electron applicators	2%
	Central axis parameter constancy (PDD, TAR)	2%
	Off-axis factor constancy	2%
	Transmission factor constancy for all treatment accessories	2%
	Wedge transmission factor constancy[f]	2%
	Monitor chamber linearity	1%
	X-ray output constancy vs. gantry angle	2%
	Electron output constancy vs. gantry angle	2%
	Off-axis factor constancy vs. gantry angle	2%
	Arc mode	Mfrs. specs.
	Safety Interlocks	
	Follow manufacturer's test procedures	functional
	Mechanical	
	Collimator rotation isocenter	2mm diameter
	Gantry rotation isocenter	2mm diameter
	Couch rotation isocenter	2mm diameter
	Coincidence of collimetry, gantry, couch axes with isocenter	2mm diameter
	Coincidence of radiation and mechanical isocenter	2mm diameter

[f] Most wedges' transmission factors are field size and depth dependent.

[a] The tolerances listed in the tables should be interpreted to mean that if a parameter either: (1) exceeds the tabulated value (e.g., the measured isocenter under the gantry exceeds 2 mm diameter); or (2) that the change in the parameter exceeds the nominal value (e.g., the output changes by more than 2%), then an action is required. The distinction is emphasized by the use of the term constancy for the latter case. Moreover, for constancy, percent values ± the deviation of the parameter with respect to its nominal value; distances are referenced to the isocenter or nominal SSD.

CHAPTER 41—APPENDIX E

INFORMATION ON RADIATION SHIELDING REQUIRED FOR PLAN REVIEWS FOR THERAPY MACHINES

I. All therapeutic radiation machines.

A. Basic facility information including: name, telephone number and agency registration number of the individual responsible for preparation of the shielding plan; name and telephone number of the facility supervisor; and the street address (including room number if applicable) of the external beam radiation therapy facility. The plan should also indicate whether this is a new structure or a modification to existing structure(s).

B. All wall, floor, and ceiling areas struck by the useful beam shall have primary barriers.

C. Secondary barriers shall be provided in all wall, floor, and ceiling areas not having primary barriers.

II. Therapeutic machines up to 150 kV (photons only).

In addition to the requirements listed in Section I above, therapeutic radiation machine facilities which produce only photons with a maximum energy less than or equal to 150 kV shall submit shielding plans which contain, as a minimum, the following additional information:

A. Equipment specifications, including the manufacturer and model number of the therapeutic radiation machine, as well as the maximum technique factors.

B. Maximum design workload for the facility including total weekly radiation output (expressed in gray (rad) or air kerma at one meter), total beam-on time per day or week, the average treatment time per patient, along with the anticipated number of patients to be treated per day or week.

C. A facility blueprint/drawing indicating: scale (0.25 inch = 1 foot is typical); direction of north; normal location of the therapeutic radiation machine's radiation port(s); the port's travel and traverse limits; general direction(s) of the useful beam; locations of any windows and doors; and the location of the therapeutic radiation machine control panel. If the control panel is located inside the external beam radiation therapy treatment room, the location of the operator's booth shall be noted on the plan and the operator's station at the control panel shall be behind a protective barrier sufficient to ensure compliance with 641—40.15(136C).

D. The structural composition and thickness or lead/concrete equivalent of all walls, doors, partitions, floor, and ceiling of the room(s) concerned.

E. The type of occupancy of all adjacent areas inclusive of space above and below the room(s) concerned. If there is an exterior wall, show distance to the closest area(s) where it is likely that individuals may be present.

F. At least one example calculation which shows the methodology used to determine the amount of shielding required for each physical condition (i.e., primary and secondary leakage barriers, restricted and unrestricted areas, entry door(s)) and shielding material in the facility.

(1) If commercial software is used to generate shielding requirements, identify the software used and the version/revision date.

(2) If the software used to generate shielding requirements is not in the open literature, submit quality control sample calculations to verify the result obtained with the software.

III. Therapeutic radiation machines over 150 kV.

In addition to the requirements listed in Section I above, therapeutic radiation machine facilities which produce photons or electrons with a maximum energy in excess of 150 kV or electrons shall submit shielding plans which contain, as a minimum, the following additional information:

A. Equipment specifications including the manufacturer and model number of the therapeutic radiation machine, and gray (rad) at the isocenter and the energy(s) and type(s) of radiation produced (i.e., photon, electron). The target to isocenter distance shall be specified.

B. Maximum design workload for the facility including total weekly radiation output (expressed in gray (rad) at one meter), total beam-on time per day or week, the average treatment time per patient, along with the anticipated number of patients to be treated per day or week.

C. Facility blueprint/drawing (including both floor plan and elevation views) indicating relative orientation of the therapeutic radiation machine, scale (0.25 inch = 1 foot is typical), type(s), thickness and minimum density of shielding material(s), direction of north, the locations and size of all penetrations through each shielding barrier (ceiling, walls and floor), as well as details of the door(s) and maze.

D. The structural composition and thickness or concrete equivalent of all walls, doors, partitions, floor, and ceiling of the room(s) concerned.

E. The type of occupancy of all adjacent areas inclusive of space above and below the room(s) concerned. If there is an exterior wall, show distance to the closest area(s) where it is likely that individuals may be present.

F. Description of all assumptions that were in shielding calculations including, but not limited to, design energy (i.e., room may be designed for 6 MV unit although only a 4 MV unit is currently proposed), workload, presence of integral beam-stop in unit, occupancy and use(s) of adjacent areas, fraction of time that useful beam will intercept each permanent barrier (walls, floor and ceiling) and "allowed" radiation exposure in both restricted and unrestricted areas.

G. At least one example calculation which shows the methodology used to determine the amount of shielding required for each physical condition (i.e., primary and secondary leakage barriers, restricted and unrestricted areas, small angle scatter, entry door(s) and maze) and shielding material in the facility.

(1) If commercial software is used to generate shielding requirements, also identify the software used and the version/revision date.

(2) If the software used to generate shielding requirements is not in the open literature, submit quality control sample calculations to verify the result obtained with the software.

IV. Neutron shielding.

In addition to the requirements listed in Section III above, therapeutic radiation machine facilities which are capable of operating above 10 MV shall submit shielding plans which contain, as a minimum, the following additional information:

A. The structural composition, thickness, minimum density and location of all neutron shielding material.

B. Description of all assumptions that were used in neutron shielding calculations including, but not limited to, neutron spectra as a function of energy, neutron fluency rate, absorbed dose and dose equivalent (due to neutrons) in both restricted and unrestricted areas.

C. At least one example calculation which shows the methodology used to determine the amount of neutron shielding required for each physical condition (i.e., restricted and unrestricted areas, entry door(s) and maze) and neutron shielding material utilized in the facility.

(1) If commercial software is used to generate shielding requirements, also identify the software used and the version/revision date.

(2) If the software used to generate shielding requirements is not in the open literature, submit quality control sample calculations to verify the result obtained with the software.

D. The method(s) and instrumentation which will be used to verify the adequacy of all neutron shielding installed in the facility.

V. References.

A. NCRP Report 49, "Structural Shielding Design and Evaluation for Medical Use of X-Rays and Gamma Rays of Energies Up to 10 MeV" (1976).

B. NCRP Report 51, "Radiation Protection Design Guidelines for 0.1-100 MeV Particle Accelerator Facilities" (1977).

C. NCRP Report 79, "Neutron Contamination from Medical Electron Accelerator" (1984).

D. NCRP Report 144, "Radiation Protection for Particle Accelerator Facilities" (2003).

These rules are intended to implement Iowa Code chapter 136C.

[Filed 4/7/80, Notice 2/6/80—published 4/30/80, effective 7/1/80]
[Filed 5/17/85, Notice 2/27/85—published 6/5/85, effective, see rule 41.7]
[Filed 11/24/86, Notice 10/8/86—published 12/17/86, effective 1/21/87]
[Filed 11/6/87, Notice 9/23/87—published 12/2/87, effective 1/6/88]
[Filed 7/16/92, Notice 5/27/92—published 8/5/92, effective 9/9/92]

[Filed emergency 9/14/92 after Notice 7/22/92—published 9/30/92, effective 10/1/92]
[Filed 11/5/92, Notice 9/30/92—published 11/25/92, effective 1/13/93]◊
[Filed 1/15/93, Notice 11/25/92—published 2/3/93, effective 3/10/93]
[Filed 3/10/93, Notice 12/23/92—published 3/31/93, effective 5/5/93]
[Filed emergency 7/16/93—published 8/4/93, effective 7/16/93]
[Filed emergency 11/15/93—published 12/8/93, effective 11/15/93]
[Filed 7/14/94, Notice 6/8/94—published 8/3/94, effective 9/7/94]
[Filed 5/15/95, Notice 3/29/95—published 6/7/95, effective 7/12/95]
[Filed 1/11/96, Notice 10/11/95—published 1/31/96, effective 3/6/96]
[Filed 3/15/96, Notice 1/31/96—published 4/10/96, effective 5/15/96]
[Filed 9/16/96, Notice 7/17/96—published 10/9/96, effective 11/16/96]
[Filed 5/16/97, Notice 4/9/97—published 6/4/97, effective 7/9/97]
[Filed 3/18/98, Notice 1/14/98—published 4/8/98, effective 7/1/98]◊
[Filed 1/21/99, Notice 11/4/98—published 2/10/99, effective 4/28/99]
[Filed 4/2/99, Notice 1/13/99—published 4/21/99, effective 7/1/99]
[Filed 6/25/99, Notice 5/5/99—published 7/14/99, effective 9/15/99]
[Filed 3/15/00, Notice 1/26/00—published 4/5/00, effective 5/10/00]
[Filed 3/16/01, Notice 2/7/01—published 4/4/01, effective 5/9/01]
[Filed 5/10/01, Notice 4/4/01—published 5/30/01, effective 7/4/01]
[Filed 3/14/02, Notice 2/6/02—published 4/3/02, effective 5/8/02]
[Filed 11/15/02, Notice 10/2/02—published 12/11/02, effective 1/15/03]
[Filed 3/14/03, Notice 2/5/03—published 4/2/03, effective 5/7/03]
[Filed 3/12/04, Notice 2/4/04—published 3/31/04, effective 5/5/04]
[Filed 3/11/05, Notice 2/2/05—published 3/30/05, effective 5/4/05]
[Filed 3/9/06, Notice 2/1/06—published 3/29/06, effective 5/3/06]
[Filed 3/16/07, Notice 1/31/07—published 4/11/07, effective 5/16/07]
[Filed 7/13/07, Notice 6/6/07—published 8/1/07, effective 9/5/07]
[Filed 5/14/08, Notice 4/9/08—published 6/4/08, effective 7/9/08]
[Filed ARC 7983B (Notice ARC 7792B, IAB 5/20/09), IAB 7/29/09, effective 9/2/09]
[Filed ARC 8659B (Notice ARC 8161B, IAB 9/23/09), IAB 4/7/10, effective 5/12/10]
[Filed ARC 8982B (Notice ARC 8762B, IAB 5/19/10), IAB 8/11/10, effective 9/15/10]
[Filed ARC 0577C (Notice ARC 0381C, IAB 10/3/12), IAB 2/6/13, effective 3/13/13]
[Filed ARC 1401C (Notice ARC 1317C, IAB 2/5/14), IAB 4/2/14, effective 5/7/14]
[Filed ARC 1639C (Notice ARC 1470C, IAB 5/28/14), IAB 10/1/14, effective 11/5/14]

◊ Two or more ARCs

CHAPTER 42
PERMIT TO OPERATE IONIZING RADIATION PRODUCING MACHINES OR ADMINISTER RADIOACTIVE MATERIALS

641—42.1(136C) Purpose. The purpose of this chapter is to specify the permit requirements of individuals who operate or use ionizing radiation producing machines or administer radioactive materials on or to human patients or human research subjects for diagnostic or therapeutic purposes. This chapter establishes minimum formal education standards and examination, continuing education, and disciplinary procedures.
[**ARC 0577C**, IAB 2/6/13, effective 3/13/13]

641—42.2(136C) Definitions.

"ARRT" means the American Registry of Radiologic Technologists.

"Authorized user" means an Iowa-licensed physician identified on a specific radioactive materials license or a license of broad scope as defined in 641—subrule 41.2(2).

"Bone densitometry" means the art and science of applying ionizing radiation to the human body using a dual energy X-ray absorptiometry unit for the sole purpose of measuring bone density.

"Category" defines specific duties allowed in the limited radiologic technologist permit classification.

"Classification" means a specific class of permit that allows the permit holder to perform the duties specified for that permit class.

"Continuing education activity" means a learning activity that is recognized as continuing education by the ARRT or NMTCB.

"Department" means the Iowa department of public health.

"Expiration date" means 11:59 p.m. on the stated date.

"Formal education" means a course of classroom and clinical instruction which meets the training standards set by the department.

"Ionizing radiation producing machine" or *"radiation machine"* means an assemblage of components for the controlled production of X-rays. An ionizing radiation producing machine includes minimally an X-ray high-voltage generator, an X-ray control, a tube housing assembly, a beam-limiting device, and the necessary supporting structures. Additional components which function with the system are considered integral parts of the system.

"NMTCB" means Nuclear Medicine Technology Certification Board.

"Nuclear medicine procedure" means any procedure utilizing radiopharmaceuticals for diagnosis or treatment of disease in human beings and any duties performed by the technologist during sealed source procedures, and includes, but is not limited to:

1. Administration of any radiopharmaceutical to human beings for diagnostic purposes.
2. Administration of radioactive material to human beings for therapeutic purposes.
3. Use of radioactive material for diagnostic purposes involving transmission or excitation.
4. Quality control and quality assurance.

"Nuclear medicine technologist" means an individual who performs nuclear medicine procedures while under the supervision of an authorized user. The classifications are as follows:

1. "General nuclear medicine technologist" performs any nuclear medicine procedures.
2. "Limited nuclear medicine technologist" performs nuclear medicine procedures only as approved by the department at the time the initial permit was issued.

"Permit" means the document issued to an individual by the department when the individual has met the requirements of this chapter. This document authorizes the individual to perform the duties allowed for the classification of permit issued.

"Radiation therapist" means an individual who performs radiation therapy under the supervision of a radiation oncologist licensed in Iowa.

"Radiation therapy" means the science and art of performing simulation radiography or applying ionizing radiation emitted from X-ray machines, particle accelerators, or radioactive materials in the form of sealed sources to human beings for therapeutic purposes.

"Radiography" means a technique for generating and recording an X-ray pattern for the purpose of providing the user with an image(s) during or after termination of the exposure.

"Radiologic technologist" means an individual, excluding X-ray equipment operators, who performs radiography of the human body as ordered by an individual authorized by Iowa law to order radiography. The classifications are as follows:

1. "General radiologic technologist" performs radiography of any part of the human body.
2. "Limited radiologic technologist" performs radiography for the chest, spine, extremities, shoulder or pediatrics, excluding CT and fluoroscopy.
3. "Limited in-hospital radiologic technologist" performs radiography of any part of the human body as approved by the department at the time the initial permit was issued.

"Radiologist assistant" means an advanced-level radiologic technologist who has completed the necessary requirements in order to perform procedures as outlined in ARRT guidance while under supervision of a radiologist.

"Student" means an individual enrolled in and participating in formal education.

"Therapeutic" means a medical treatment using radiation for therapy purposes.

"X-ray equipment operator" means an individual performing radiography of the human body using dedicated equipment as ordered by an individual authorized by Iowa law to order radiography. These individuals do not qualify for a permit in any other classification. The classifications are as follows:

1. "Podiatric X-ray equipment operator" performs radiography of only the foot and ankle using dedicated podiatric equipment. Studies using CT, fluoroscopy, or nondedicated equipment are prohibited.
2. "Bone densitometry equipment operator" performs bone densitometry using only dual energy X-ray absorptiometry equipment. Studies using CT, fluoroscopy, or nondedicated equipment are prohibited.

[**ARC 0577C**, IAB 2/6/13, effective 3/13/13]

641—42.3(136C) Exemptions.

42.3(1) The following are exempt from obtaining a permit as required by this chapter:

a. A licensed physician.
b. A licensed physician's assistant.
c. A licensed chiropractor.
d. A licensed dentist.
e. A licensed dental hygienist.
f. A licensed podiatrist.
g. An individual certified by the dental board in dental radiography.
h. A student as a part of the student's formal education.

42.3(2) The department may, upon application or upon its own initiative, grant such exemptions from the requirements of this chapter as it determines are authorized by law and will not result in undue hazard to public health and safety. Application for exemptions should be made in accordance with 641—Chapter 178.

[**ARC 0577C**, IAB 2/6/13, effective 3/13/13]

PERMIT APPLICATION AND RENEWAL

641—42.4(136C) Permit application and renewal. An individual shall not operate ionizing radiation producing machines or administer radioactive materials for diagnostic or therapeutic purposes unless the individual possesses a current Iowa permit in the individual's classification of practice.

[**ARC 0577C**, IAB 2/6/13, effective 3/13/13]

641—42.5(136C) Permit to practice as a general radiologic technologist.

42.5(1) An individual applying for an initial permit shall:

a. Be at least 18 years of age.

b. Submit the appropriate completed application.

c. Submit a nonrefundable $60 application fee.

d. Submit proof of a passing score on the ARRT general radiography examination.

42.5(2) An individual renewing a current permit shall:

a. Renew annually by submitting a renewal application and a nonrefundable $50 renewal fee.

b. Report 24.0 hours of continuing education obtained within the biennium indicated on the individual's permit.

42.5(3) An individual reinstating an expired permit shall submit the following:

a. Application to reinstate and nonrefundable $60 application fee. If the permit is expired six months or more, all previous exemptions from this chapter are no longer valid and the individual is subject to all requirements of subrule 42.5(1).

b. Any continuing education hours due at time of renewal. If the permit is expired more than one year past the expiration date, 24.0 hours of continuing education obtained within the previous 24 months must be submitted.

c. Proof that all stipulations of any order(s) of disciplinary or enforcement action have been satisfied.

[**ARC 0577C**, IAB 2/6/13, effective 3/13/13]

641—42.6(136C) Permit to practice as a general nuclear medicine technologist.

42.6(1) An individual applying for an initial permit shall:

a. Be at least 18 years of age.

b. Submit the appropriate completed application.

c. Submit a nonrefundable $60 application fee.

d. Submit proof of a passing score on ARRT's nuclear medicine examination or the NMTCB nuclear medicine examination.

42.6(2) An individual renewing a current permit shall:

a. Renew annually by submitting a renewal application and a nonrefundable $50 renewal fee.

b. Report 24.0 hours of continuing education obtained within the biennium indicated on the individual's permit.

42.6(3) An individual reinstating an expired permit shall submit the following:

a. Application to reinstate and nonrefundable $60 application fee. If the permit is expired six months or more, all previous exemptions from this chapter are no longer valid and the individual is subject to all requirements of subrule 42.6(1).

b. Any continuing education hours due at time of renewal. If the permit is expired more than one year past the expiration date, 24.0 hours of continuing education obtained within the previous 24 months must be submitted.

c. Proof that all stipulations of any order(s) of disciplinary or enforcement action have been satisfied.

[**ARC 0577C**, IAB 2/6/13, effective 3/13/13]

641—42.7(136C) Permit to practice as a radiation therapist.

42.7(1) An individual applying for an initial permit shall:

a. Be at least 18 years of age.

b. Submit the appropriate completed application.

c. Submit a nonrefundable $60 application fee.

d. Submit proof of a passing score on the ARRT's radiation therapy examination.

42.7(2) An individual renewing a current permit shall:

a. Renew annually by submitting a renewal application and a nonrefundable $50 renewal fee.

b. Report 24.0 hours of continuing education obtained within the biennium indicated on the individual's permit.

42.7(3) An individual reinstating an expired permit shall submit the following:

a. Application to reinstate and nonrefundable $60 application fee. If the permit is expired six months or more, all previous exemptions from this chapter are no longer valid and the individual is subject to all requirements of subrule 42.7(1).

b. Any continuing education hours due at time of renewal. If the permit is expired more than one year past the expiration date, 24.0 hours of continuing education obtained within the previous 24 months must be submitted.

c. Proof that all stipulations of any order(s) of disciplinary or enforcement action have been satisfied.

[**ARC 0577C**, IAB 2/6/13, effective 3/13/13]

641—42.8(136C) Permit to practice as a radiologist assistant.

42.8(1) An individual applying for an initial permit shall:

a. Submit the appropriate completed application.

b. Submit a nonrefundable $60 application fee.

c. Submit proof of completion of formal education for a radiologist assistant.

d. Submit proof of one year of experience as a general radiologic technologist.

e. Submit proof of passing score on the ARRT radiologist assistant examination or another examination that is recognized by the department.

42.8(2) An individual renewing a current permit shall:

a. Renew annually by submitting a renewal application and a nonrefundable $50 renewal fee.

b. Report 50.0 hours of continuing education obtained within the biennium indicated on the individual's permit. Radiologist assistant permit holders must obtain at least one-half of the required continuing education in subject areas specific to radiography. The remainder may be earned as physician credit hours.

42.8(3) An individual reinstating an expired permit shall submit the following:

a. Application to reinstate and nonrefundable $60 application fee. If the permit is expired six months or more, all previous exemptions from this chapter are no longer valid and the individual is subject to all requirements of subrule 42.8(1).

b. Any continuing education hours due at time of renewal. If the permit is expired more than one year past the expiration date, 50.0 hours of continuing education obtained within the previous 24 months must be submitted.

c. Proof that all stipulations of any order(s) of disciplinary or enforcement action have been satisfied.

[**ARC 0577C**, IAB 2/6/13, effective 3/13/13]

641—42.9(136C) Permit to practice as a limited radiologic technologist with categories of chest, spine, extremities, shoulder, pediatric. An individual with a limited radiologic technologist permit shall perform radiography only within the scope of the category(ies) in which the permit is issued.

42.9(1) The scope of each category is defined as follows:

a. "Chest" allows the permit holder to perform radiography of the lung fields including the cardiac shadow, as taught in the limited radiography formal education standards. Chest radiograph techniques shall not be manipulated for the evaluation of the shoulder, clavicle, scapula, ribs, thoracic spine and sternum. Limited radiologic technologists who have completed the appropriate formal education after January 1, 2009, may perform lateral decubitus chest views.

b. "Extremities" allows the permit holder to perform radiography for body parts from:

(1) The distal phalanges of the foot to the head of the femur, including its articulation with the pelvic girdle. True hip radiographs are prohibited.

(2) The distal phalanges of the hand to the head of the humerus. These projections may include the acromioclavicular or glenoid-humeral areas. The radiograph shall not include any of the views in the shoulder category unless the individual holds a limited radiologic technologist permit that includes the shoulder category.

c. "Spine" allows the permit holder to perform radiography of the spine in the approved areas only. Approved areas and limitations are described as:

(1) Cervical vertebrae.

(2) Thoracic (dorsal) vertebrae.

(3) Lumbar vertebrae to include the articulations with the sacrum and coccyx and the sacral articulation with the pelvic girdle. True pelvis radiographs or other projections performed with the image receptor positioned perpendicular to the long axis of the torso are prohibited under this category.

(4) All projections shall be performed as taught in the limited radiologic technologist formal education standards.

d. "Shoulder" allows the permit holder to perform radiography of the shoulder in the approved projections only. Approved projections and limitations are described as:

(1) AP internal and external rotation.

(2) AP neutral.

(3) Transthoracic lateral views.

(4) Scapular "Y" lateral.

(5) The image may not include the proximal end of the clavicle on any AP projection. All other shoulder views are prohibited. The permit holder must hold a limited radiologic technologist permit with a category of either chest or extremity in order to be granted the shoulder category.

e. "Pediatric" allows the permit holder to perform radiography of either chest or extremities or both as defined in paragraphs 42.9(1)*"a"* and *"b"* above for patients aged 36 months and under. The permit holder must hold a limited radiologic technologist permit with the minimum categories of chest or extremities or both in order to qualify for pediatric radiography. This designation allows permit holders to perform pediatric radiography within the permit classifications listed on their permit only. All other projections on pediatric patients by limited radiologic technologists are prohibited.

42.9(2) An individual applying for an initial permit shall:

a. Be at least 18 years of age.

b. Submit the appropriate completed application.

c. Submit a nonrefundable $60 application fee.

d. Submit proof of completion of formal education in all limited diagnostic radiography categories for which the individual is applying. In order to apply for the shoulder category, the individual must also apply for the chest or extremity category. In order to apply for the pediatric category, the individual must also apply for the chest or extremity category.

e. Submit proof of completion of testing as applicable for each permit category for which the individual is applying on the limited radiologic technologist permit. No examination is required for the categories of shoulder or pediatric.

(1) The following are passing scores:

1. A score of at least 70 percent on the ARRT limited scope of practice in radiography examination core section and at least 70 percent on each category; or

2. A score of at least 70 percent on the American Chiropractic Registry of Radiologic Technologists Limited Radiography examination; or

3. A score of at least 70 percent on a department-approved examination.

(2) Three failed attempts on the examination in 42.9(2)*"e"*(1)"1" or "3" will require the individual to repeat the formal education or complete a department-approved review program.

(3) Each individual making application to take an examination as a limited radiologic technologist in 42.9(2)*"e"*(1)"1" or "3" must submit an application and nonrefundable fee of $110 to the department each time the individual takes the examination.

f. Submit proof of completion of formal education and examination in the category to be added and a nonrefundable $25 amendment fee to add chest, extremity or spine category to an existing limited radiologic technologist permit. A score of at least 70 percent on each category is required.

g. Submit proof of completion of formal education and a nonrefundable $25 amendment fee to add shoulder or pediatric category to an existing limited radiologic technologist permit. No examination is required.

42.9(3) An individual renewing a current permit shall:

a. Renew annually by submitting a renewal application and a nonrefundable $50 renewal fee.

b. Report 12.0 hours of continuing education obtained within the biennium indicated on the individual's permit.

42.9(4) An individual reinstating an expired permit shall submit the following:

a. Application to reinstate and nonrefundable $60 application fee. If the permit is expired six months or more, all previous exemptions from this chapter are no longer valid and the individual is subject to all requirements of rule 641—42.9(136C).

b. Any continuing education hours due at time of renewal. If the permit is expired more than one year past the expiration date, 12.0 hours of continuing education obtained within the previous 24 months must be submitted.

c. Proof that all stipulations of any order(s) of disciplinary or enforcement action have been satisfied.

[**ARC 0577C**, IAB 2/6/13, effective 3/13/13]

641—42.10(136C) Permit to practice as an X-ray equipment operator in either podiatric radiography or bone densitometry. After January 1, 2015, all individuals performing only bone densitometry must hold a bone densitometry permit.

42.10(1) An individual applying for an initial permit shall:

a. Be at least 18 years of age.

b. Submit the completed application.

c. Submit a nonrefundable $25 application fee.

d. Submit proof of completion of a formal education that meets the department minimum training standards.

e. Submit proof of at least a 70 percent score on a department-approved examination.

(1) All podiatric X-ray equipment operators must pass the examination with a 70 percent score. After January 1, 2015, all bone densitometry equipment operators must submit proof of at least a 70 percent score on a department-approved examination.

(2) Three failed attempts on the examination in 42.10(1)*"e"*(1) will require the individual to repeat the formal education or complete a department-approved review program.

42.10(2) An individual renewing a current permit shall:

a. Renew annually by submitting a renewal application and a nonrefundable $25 renewal fee.

b. Report 4.0 hours of continuing education obtained within the biennium indicated on the individual's permit.

42.10(3) An individual reinstating an expired permit shall submit the following:

a. Application to reinstate and nonrefundable $25 application fee. If the permit is expired six months or more, all previous exemptions from this chapter are no longer valid and the individual is subject to all requirements of subrule 42.10(1).

b. Any continuing education hours due at time of renewal. If the permit is expired more than one year past the expiration date, 4.0 hours of continuing education obtained within the previous 24 months must be submitted.

c. Proof that all stipulations of any order(s) of disciplinary or enforcement action have been satisfied.

[**ARC 0577C**, IAB 2/6/13, effective 3/13/13]

641—42.11 Reserved.

641—42.12(136C) Closed classification or category permits.

42.12(1) The following classifications or categories are closed to new applicants. Permits in the following classifications or categories that are expired for more than six months are not eligible to be reinstated, and individuals shall maintain current permits as outlined below:

a. Limited in-hospital radiologic technologist shall:

(1) Perform diagnostic radiography procedures, excluding CT and fluoroscopy, in a hospital setting only for specific body parts for which the individual is qualified.

(2) Renew annually by submitting a renewal application and a nonrefundable $50 renewal fee.

(3) Report 24.0 hours of continuing education obtained within the biennium indicated on the individual's permit.

b. Limited nuclear medicine technologist shall:

(1) Perform nuclear medicine procedures for which the individual is qualified and has been authorized by the department.

(2) Renew annually by submitting a renewal application and a nonrefundable $50 renewal fee.

(3) Report 12.0 hours of continuing education obtained within the biennium indicated on the individual's permit.

c. Limited radiologic technologist paranasal sinus shall:

(1) Perform diagnostic radiography procedures, excluding CT and fluoroscopy, specific to paranasal sinus.

(2) Renew annually by submitting a renewal application and a nonrefundable $50 renewal fee.

(3) Report 6.0 hours of continuing education obtained within the biennium indicated on the individual's permit.

42.12(2) An individual renewing a permit expired less than six months shall submit the following:

a. Application to reinstate and nonrefundable $60 application fee.

b. Any continuing education hours due at time of renewal.

c. Proof that all stipulations of any order(s) of disciplinary or enforcement action have been satisfied.

[**ARC 0577C**, IAB 2/6/13, effective 3/13/13]

641—42.13(136C) Combining permits for an individual qualifying for permits in more than one classification.

42.13(1) An individual applying for an initial permit in more than one classification at the same time shall combine classifications on one permit by:

a. Indicating each classification on the appropriate completed application;

b. Submitting the required documentation for each classification as outlined in each classification section; and

c. Submitting a nonrefundable $100 application fee.

42.13(2) Permit holders shall add a classification to an existing permit by:

a. Completing the appropriate application;

b. Submitting the required documentation as outlined in the section specific to the classification to be added; and

c. Submitting a nonrefundable $25 fee.

42.13(3) An individual renewing a combined classification permit must submit the appropriately completed renewal application and submit a nonrefundable $75 renewal fee.

42.13(4) An individual shall submit a total of 24.0 hours of continuing education obtained within the biennium indicated on the individual's permit. If the permit includes the radiologist assistant classification, then the individual must submit a total of 50.0 hours of continuing education obtained within the biennium indicated on the individual's permit.

[**ARC 0577C**, IAB 2/6/13, effective 3/13/13]

641—42.14 to **42.17** Reserved.

PERMIT HOLDER SUBMISSION OF CONTINUING EDUCATION

641—42.18(136C) Submission of proof of completion of continuing education by permit holder to meet continuing education requirements to renew or reinstate a permit.

42.18(1) A permit holder who has a current ARRT or NMTCB registration that has been renewed within 60 days prior to the submission of the permit renewal application required by these rules shall be credited the number of hours recognized by the ARRT or NMTCB registration, or

42.18(2) A permit holder must submit proof of completion of continuing education activities recognized by ARRT or NMTCB.

a. Acceptable proof of completion must be documentation signed and dated by the continuing education provider that includes the participant's name, title of the activity, approval number for the activity, dates of attendance, number of contact hours for the activity, name of the approving organization, and signature of the sponsor or instructor or authorized representative of the sponsor or instructor.

b. Continuing education activities that are lecture presentations may not be repeated for credit in the same biennium.

c. All continuing education activities that are not lecture presentations may not be repeated for credit in the same or any subsequent biennium.

42.18(3) Podiatric X-ray equipment operator permit holders may submit activities as described in 42.18(2) or may submit activities sponsored by the American Podiatric Medical Association or the Iowa Podiatric Medical Society.

a. Acceptable proof of completion must be documentation signed and dated by the continuing education provider that includes the participant's name, title of the activity, approval number for the activity, dates of attendance, number of contact hours for the activity, the name of the approving organization, and signature of the sponsor or instructor or authorized representative of the sponsor or instructor.

b. Continuing education activities that are lecture presentations may not be repeated for credit in the same biennium.

c. All continuing education activities that are not lecture presentations may not be repeated for credit in the same or any subsequent biennium.

[**ARC 0577C**, IAB 2/6/13, effective 3/13/13]

641—42.19 and **42.20** Reserved.

ADMINISTRATIVE ITEMS AND GROUNDS FOR DISCIPLINARY ACTION

641—42.21(136C) Administrative items.

42.21(1) A nonrefundable $25 fee shall be assessed for each check returned for any reason. All fees for returned checks plus original fees must be paid by certified bank check or money order.

42.21(2) A permit is valid from the date of issuance until the expiration date, unless otherwise revoked or suspended.

42.21(3) The department may at any time require further documentation to ensure compliance with these rules.

42.21(4) The permit holder shall make the permit available at the individual's place of employment. If the permit holder works at more than one facility, a duplicate of the permit shall be kept at each facility.

42.21(5) The permit holder must maintain proof of continuing education for at least three years.

42.21(6) Continuing education obtained to satisfy disciplinary or enforcement action or as part of a corrective action plan may not be reported to meet continuing education requirements.

42.21(7) All permit holders are subject to a department audit at any time.

[**ARC 0577C**, IAB 2/6/13, effective 3/13/13]

641—42.22(136C) Rules of conduct, self-reporting requirements, and enforcement actions for all permit holders.

42.22(1) *Rules of conduct.* These are mandatory standards of minimally acceptable professional conduct intended to promote the protection, safety, and comfort of patients. Any individual who fails to meet or allows any other individual to fail to meet the following standards may be subject to enforcement actions as outlined in subrule 42.22(3). The following shall be grounds for disciplinary action:

a. Failing to perform with reasonable skill and safety all procedures accepted under this chapter's educational guidelines and allowed under the individual's permit.

b. Operating as a permitted individual without meeting the applicable requirements of this chapter. This includes performing procedures not allowed under the individual's current permit.

c. Failing to report immediately to the department any individual who may be operating as a permit holder and who does not meet the requirements of this chapter.

d. Engaging in any practice that results in unnecessary danger to a patient's life, health, or safety. This includes delegating or accepting the delegation of any function when the delegation or acceptance could cause unnecessary danger.

e. Engaging in any action that the department determines may jeopardize the health and safety of the public, other staff or the permit holder. These actions shall include but not be limited to:

(1) A misdemeanor or felony which may impair or limit the individual's ability to perform the duties authorized by the individual's permit.

(2) Any disciplinary action brought against the individual in connection with a certificate or license issued from a certifying or licensing entity.

(3) Being found guilty of incompetence or negligence during the individual's performance as a permit holder.

f. Failing to conform to applicable state and federal statutes and rules. This includes any action that might place a facility in noncompliance with Iowa statutes and rules.

g. Practicing when there is an actual or potential inability to perform with reasonable skill and safety due to illness, use of alcohol, drugs, chemicals, or any other material, or as the result of any mental or physical condition.

h. Engaging in any unethical conduct or conduct likely to deceive, defraud, or harm the public; or demonstrating a willful or careless disregard for the health, welfare, or safety of a patient.

i. Revealing privileged communication from or relating to former or current patients except as permitted by law.

j. Improperly managing patient records, including failing to maintain adequate records, failing to furnish records, or making, causing, or allowing anyone to make a false, deceptive, or misleading entry into a patient record.

k. Providing false or misleading information that is directly related to the care of a former or current patient.

l. Interpreting or rendering a diagnosis for a physician based on a diagnostic image or prescribing medications or therapies.

m. Failing to immediately report to a supervisor information concerning an error made in connection with imaging, treating, or caring for a patient. This includes any departure from the normal standard of care and behavior that is negligent.

n. Employing fraud or deceit to obtain, attempt to obtain or renew a permit under this chapter or in connection with a certification or license issued from a certifying or licensing entity. This includes altering documents, failing to provide complete and accurate responses or information, or indicating falsely in writing that a permit is valid when that is not the case.

o. Failure to provide truthful, accurate, unaltered, or nondeceptive information related to continuing education activities to the department or a record keeper.

p. Assisting others to provide false, inaccurate, altered, or deceptive information related to continuing education to this department or a record keeper. This includes sharing answers, providing or using false certificates of participation, or verifying continuing education hours that have not been earned.

q. Failure to pay all fees or costs required to meet the requirements of this chapter. Penalties for working without a current permit will be considered on a case-by-case basis.

r. Failure to respond to an audit request or failure to provide proper documentation.

s. Submitting false information to a facility that might place the facility in noncompliance with any federal or state statutes or laws.

t. Engaging in any conduct that subverts or attempts to subvert a department investigation.

u. Failure to comply with a subpoena issued by the department or failure to cooperate with an investigation by the department.

v. Failure to comply with the terms of a department order or the terms of a settlement agreement or consent order.

w. Sexual harassment of a patient, student or supervisee. Sexual harassment includes sexual advances, sexual solicitation, requests for sexual favors, and other verbal and physical conduct of a sexual nature.

x. Violating a statute of this state, another state, or the United States, without regard to its designation as either a felony or misdemeanor, including but not limited to a crime involving dishonesty, fraud, theft, embezzlement, controlled substances, substance abuse, assault, sexual abuse, sexual misconduct, or homicide. A copy of the record of conviction or plea of guilty is conclusive evidence of the violation.

y. Having a permit, license or certification related to the classification of the permit issued to the individual suspended or revoked or having other disciplinary action taken by a licensing or certifying authority of this state or another state, territory or country. A copy of the record or order of suspension, revocation, or disciplinary action is conclusive or prima facie evidence.

z. Failure to respond within 30 days of receipt of communication from the department.

42.22(2) *Self-reporting.* Each permit holder shall:

a. Submit a report to the department within five days of the final disposition of all criminal proceedings, convictions, or military court-martials involving alcohol or illegal drug use while operating as a permit holder, sex-related infractions, or patient-related infractions in any state, territory, or country.

b. Submit a written report to the department within five days of the initial charge and within five days of the final disposition of any disciplinary action brought against the individual in connection with a certificate or license issued from a certifying or licensing entity, or any disciplinary action brought against the individual by an employer or patient.

42.22(3) *Enforcement actions.* Enforcement actions may include, but are not limited to, denial, probation, suspension or revocation of a permit, directed corrective action, and civil penalty.

[**ARC 0577C**, IAB 2/6/13, effective 3/13/13]

641—42.23(136C) Procedures for demand for information, notice of proposed action, and orders for penalties, suspensions, revocations, and civil penalties for all individuals under this chapter. These actions may be imposed on any permit holder who violates any rule in this chapter.

42.23(1) *Demand for information.*

a. The department may issue a demand for information for the purpose of determining whether any further action shall be taken. The demand shall state the alleged violations and allow the individual 20 days from the date of the letter to file a written answer with the department.

b. The individual must file a written answer to the department. The answer shall specifically admit or deny each allegation or charge made in the demand for information and provide fact and law on which the answer relies, set forth reasons why the demand should not have been issued, and if the requested information is not provided, the reasons why it is not provided.

c. Upon review of the answer, the department may institute the next level of proceeding or consider the matter closed. If no answer is filed, the department shall institute the notice of proposed action.

42.23(2) *Procedures for enforcement actions.*

a. *Notice of proposed action.*

(1) In response to an alleged violation of any provision of the Iowa Code, these rules, or any order issued by the department, the department may issue a written notice of proposed action. The notice of proposed action shall concisely state the alleged violation(s), the action the department is proposing, the time period in which a written response must be received, and the process for requesting a hearing.

(2) A written response must state any facts, explanations, or arguments denying the violations or must demonstrate any extenuating circumstances, error in the notice, or other reason why the proposed action should not be imposed. Responses may also request remission or mitigation of any penalty.

(3) If a request for a hearing is received within the allotted time period, the proposed action shall be suspended pending the outcome of the hearing. Prior to or at the hearing, the department may rescind the notice of proposed action upon satisfaction that the reason for the proposed action has been resolved.

(4) If no answer is filed, the department shall institute the order.

b. Order. An order may be issued upon response to the notice of proposed action or if no answer to the notice has been filed. The order may institute a proceeding to impose a penalty or suspend, revoke, or place on probation the individual's permit, or issue a civil penalty. An order shall concisely state the violation(s), the action the department has imposed, the effective date of the order, the time period for written response to be received by the department, and the process for requesting a hearing. If there has been consent in writing to the notice of proposed action, no written response to the order is necessary.

(1) If a request for a hearing is received within the allotted time period, the proposed action of the order shall be suspended pending the outcome of the hearing. Prior to or at the hearing, the department may rescind the order upon satisfaction that the reason for the proposed action has been resolved.

(2) If no answer is filed, the department shall institute the order. A consent to the order shall constitute a waiver to a hearing, findings of fact and conclusions of law, and of all right to seek department and judicial review or to contest the validity of the order in any form as to those matters which have been consented to or agreed to or on which a hearing has not been requested. An order that has been consented to shall have the same force and effect as an order made after hearing by a presiding officer or the department and shall be effective as provided in the order. Failure to comply with an order either consented to or validated by a hearing officer shall result in further enforcement action.

c. Civil penalty. Before instituting any proceeding to impose a civil penalty, the department shall serve written notice of violation upon the individual charged. This notice shall be included in the notice of proposed action or order issued. The notice of proposed action or order shall specify the amount of each proposed penalty for each alleged violation. The notice or order shall state that the amount charged may be paid as specified or protested in its entirety or in part. Upon final action of a civil penalty, payment must be made within the specified time stated in the order or the department may refer the matter to the attorney general for collection.

d. Settlement and compromise. At any time after the issuance of a notice or order designating the time and place of hearing in response to an order, the department and the regulated individual may enter into a stipulation for a settlement or compromise of the notice or order. The stipulation of compromise shall be subject to approval by the designated presiding officer or, if none has been designated, by the chief administrative law judge. The presiding officer or chief administrative law judge may order such adjudication of the issued notice or order as deemed to be required in the public interest to dispose of the proceeding. If approved, the terms of the settlement or compromise shall be embodied in a decision or order settling and discontinuing the proceeding.

[**ARC 0577C**, IAB 2/6/13, effective 3/13/13]

641—42.24 and **42.25** Reserved.

DEPARTMENT APPROVAL OF CONTINUING EDUCATION ACTIVITIES

641—42.26(136C) Department approval of continuing education activities.

42.26(1) All continuing education activities must meet the definition of continuing education activities as defined in 641—42.2(136C).

42.26(2) On March 13, 2013, the department will no longer review or approve continuing education activities.

42.26(3) All continuing education activities with department approval are valid until the expiration date issued for that activity and will not be renewed.

[**ARC 0577C**, IAB 2/6/13, effective 3/13/13]

641—42.27 to **42.29** Reserved.

FORMAL EDUCATION

641—42.30(136C) Requirements for formal education. Formal education must meet the following minimum requirements:

42.30(1) General radiologic technology formal education must be recognized by the ARRT to allow students to qualify for the general radiography examination.

42.30(2) Nuclear medicine technology formal education must be recognized by the ARRT or NMTCB to allow students to qualify for the nuclear medicine technology examination.

42.30(3) Radiation therapy formal education must be recognized by the ARRT to allow students to qualify for the radiation therapy examination.

42.30(4) Radiologist assistant formal education must provide training to allow students to qualify for a department-approved radiologist assistant examination.

42.30(5) Limited radiologic technologist formal education must meet the minimum standards specified in 641—42.31(136C).

42.30(6) X-ray equipment operator formal education must meet the minimum standards as outlined in 641—42.32(136C) or 641—42.33(136C).

[**ARC 0577C**, IAB 2/6/13, effective 3/13/13]

641—42.31(136C) Standards for formal education for limited radiologic technologists.

42.31(1) The formal education may be a single offering that meets all standards of all categories, or it may be offered individually specific to the category the provider wishes to offer.

42.31(2) The following are the minimum standards:

a. A principal instructor shall:

(1) Be an Iowa-licensed chiropractor teaching spine and extremities categories only; or

(2) Be an Iowa-permitted general radiologic technologist and have at least two years of current experience in radiography; or

(3) Hold a current ARRT registration and have at least two years of current experience in radiography if the clinical site is located outside of Iowa.

b. A clinical instructor shall:

(1) Be an Iowa-licensed chiropractor teaching spine and extremities categories only; or

(2) Be an Iowa-permitted general radiologic technologist and have at least two years of current experience in radiography; or

(3) Be an Iowa-permitted limited radiologic technologist in the category of instruction and have at least two years of current experience in radiography; or

(4) Hold a current ARRT registration and have at least two years of current experience in radiography if the clinical site is located outside of Iowa.

c. Clinical instructors shall be supervised by the principal instructor.

d. A principal instructor may also act as clinical instructor, if applicable.

e. Classroom and clinical standards are listed below:

Category	Classroom Hours	Clinical Practice Projections	Clinical Competency Projections
Core: completed by all trainees	60		
Chest	20	30 PA or LAT	5 PA, 5 LAT
Upper extremity	20	30 (any projections)	10 (only 2 of any projection allowed)
Lower extremity	20	30 (any projections)	10 (only 2 of any projection allowed)
Shoulder	20	20 (any projections)	6 (only 2 of any projection allowed)
Spine	20	30 (any projections)	10 (only 2 of any projection allowed)

Category	Classroom Hours	Clinical Practice Projections	Clinical Competency Projections
Pediatric: add on to chest	8 of initial pediatrics	20 (any projections)	2 PA, 2 LAT
Pediatric: add on to upper extremity	8 of initial pediatrics	20 (any projections)	10 (only 2 of any projection allowed)
Pediatric: add on to lower extremity	8 of initial pediatrics	20 (any projections)	10 (only 2 of any projection allowed)

(1) All competency testing for limited radiography shall be directly supervised by the principal or clinical instructor.

(2) Clinical instructors shall directly supervise all students before the student's competency for a specific projection is documented and indirectly supervise after the student's competency for a specific projection is documented.

(3) Current permit holders completing formal education to add a category do not need to repeat the core curriculum.

42.31(3) Department approval is required before implementing any formal education or making any changes to a formal education offering.

42.31(4) Administrative items for all formal education:

a. The department reserves the right to audit or evaluate any aspect of the formal education or student progress.

b. The department may at any time require further documentation.

[**ARC 0577C**, IAB 2/6/13, effective 3/13/13]

641—42.32(136C) Standards for formal education for X-ray equipment operators in podiatric radiography.

42.32(1) The following are the minimum standards:

a. A principal instructor shall:

(1) Be an Iowa-licensed podiatrist; or

(2) Be an Iowa-permitted general radiologic technologist and have at least two years of current experience in radiography; or

(3) Hold a current ARRT registration and have at least two years of current experience in radiography if the clinical site is located outside of Iowa.

b. A clinical instructor shall:

(1) Be an Iowa-licensed podiatrist; or

(2) Be an Iowa-permitted limited radiologic technologist in the category of extremities and have at least two years of current experience in radiography; or

(3) Be an Iowa-permitted X-ray equipment operator in podiatry and have at least two years of current experience in radiography; or

(4) Be an Iowa-permitted general radiologic technologist and have at last two years of current experience in radiography; or

(5) Hold a current ARRT registration and have at least two years of current experience in radiography if the clinical site is located outside of Iowa.

c. Clinical instructors shall be supervised by the principal instructor.

d. A principal instructor may also act as clinical instructor, if applicable.

e. The following are classroom and clinical standards:

(1) A minimum of 8.0 hours of classroom instruction to include radiation safety, equipment operation, patient care, and anatomy.

(2) Clinical instruction to include positioning and a minimum of 20 projections excluding the competency projections.

(3) Clinical competency projections shall include 10 projections with only 2 of any single projection allowed to count toward the competency projections.

(4) All competency testing shall be directly supervised by the principal or clinical instructor.

(5) Clinical instructors shall directly supervise all students before the student's competency for the specific projection is documented and indirectly supervise after the student's competency for the specific projection is documented.

42.32(2) Department approval is required before implementing any formal education or making any changes to a formal education offering.

42.32(3) Administrative items for all formal education:

a. The department reserves the right to audit or evaluate any aspect of the formal education or student progress.

b. The department may at any time require further documentation.

[**ARC 0577C**, IAB 2/6/13, effective 3/13/13]

641—42.33(136C) Standards for formal education for X-ray equipment operators in bone densitometry.

42.33(1) The following are the minimum standards:

a. A principal instructor shall have at least two years of current experience in radiography and bone densitometry and shall:

(1) Be an Iowa-permitted general radiologic technologist; or

(2) Hold a current ARRT registration if the clinical site is located outside of Iowa.

b. A clinical instructor shall have at least two years of current experience in radiography and bone densitometry and shall:

(1) Be an Iowa-permitted limited radiologic technologist; or

(2) Be an Iowa-permitted X-ray equipment operator in bone densitometry; or

(3) Be an Iowa-permitted general radiologic technologist; or

(4) Hold a current ARRT registration if the clinical site is located outside of Iowa.

c. Clinical instructors shall be supervised by the principal instructor.

d. A principal instructor shall also act as clinical instructor, if applicable.

e. The following are classroom and clinical standards:

(1) A minimum of 8.0 hours of classroom instruction to include radiation safety, equipment operation, quality control, patient care, and anatomy.

(2) Clinical instruction to include positioning and a minimum of 10 projections excluding the competency projections.

(3) Clinical competency projections shall include 5 projections.

(4) All competency testing shall be directly supervised by the principal or clinical instructor.

(5) Clinical instructors shall directly supervise all students before the student's competency for the specific projection is documented and indirectly supervise after the student's competency for the specific projection is documented.

42.33(2) Department approval is required before implementing any formal education or making any changes to a formal education offering.

42.33(3) Administrative items for all formal education:

a. The department reserves the right to audit or evaluate any aspect of the formal education or student progress.

b. The department may at any time require further documentation.

[**ARC 0577C**, IAB 2/6/13, effective 3/13/13]

These rules are intended to implement Iowa Code sections 136C.3, 136C.4, 136C.5, 136C.10, and 136C.14.

[Filed 8/28/81, Notice 3/18/81—published 9/16/81, effective 7/1/82][1]
[Filed 11/19/82, Notice 10/13/82—published 12/8/82, effective 1/12/83][2]
[Filed 11/24/86, Notice 10/8/86—published 12/17/86, effective 1/21/87]
[Filed 11/6/87, Notice 9/23/87—published 12/2/87, effective 1/6/88]
[Filed 5/8/92, Notice 4/1/92—published 5/27/92, effective 7/1/92]◊
[Filed 9/14/92, Notice 8/5/92—published 9/30/92, effective 11/4/92]

[Filed 5/15/95, Notice 3/29/95—published 6/7/95, effective 7/12/95]
[Filed 1/11/96, Notice 10/11/95—published 1/31/96, effective 3/6/96]
[Filed 9/16/96, Notice 7/17/96—published 10/9/96, effective 11/16/96]
[Filed 3/18/98, Notice 1/14/98—published 4/8/98, effective 7/1/98]
[Filed 4/2/99, Notice 1/13/99—published 4/21/99, effective 7/1/99]
[Filed 6/25/99, Notice 5/5/99—published 7/14/99, effective 9/15/99]
[Filed 3/15/00, Notice 1/26/00—published 4/5/00, effective 5/10/00]
[Filed 3/16/01, Notice 2/7/01—published 4/4/01, effective 5/9/01]
[Filed 5/10/01, Notice 4/4/01—published 5/30/01, effective 7/4/01]
[Filed 3/14/02, Notice 2/6/02—published 4/3/02, effective 5/8/02]
[Filed 3/14/03, Notice 2/5/03—published 4/2/03, effective 5/7/03]
[Filed 3/12/04, Notice 2/4/04—published 3/31/04, effective 5/5/04]
[Filed 3/11/05, Notice 2/2/05—published 3/30/05, effective 5/4/05]
[Filed 3/9/06, Notice 2/1/06—published 3/29/06, effective 5/3/06]
[Filed 5/12/06, Notice 3/29/06—published 6/7/06, effective 7/12/06]
[Filed 3/16/07, Notice 1/31/07—published 4/11/07, effective 5/16/07]
[Filed 7/13/07, Notice 6/6/07—published 8/1/07, effective 9/5/07]
[Filed 5/14/08, Notice 4/9/08—published 6/4/08, effective 7/9/08]
[Filed ARC 0577C (Notice ARC 0381C, IAB 10/3/12), IAB 2/6/13, effective 3/13/13]

◊ Two or more ARCs

1 Effective date of Ch 42 delayed 70 days by the administrative rules review committee. [Published IAC 6/23/82]
Effective date of Ch 42 delayed by the Administrative Rules Review Committee forty-five days after convening of the next General Assembly pursuant to §17A.8(9). [IAB 9/29/82]

2 Subrule 42.1(4)*"b"*(4) is rescinded two years subsequent to the effective date of rule 42.1(136C).

CHAPTER 43
MINIMUM REQUIREMENTS FOR RADON TESTING AND ANALYSIS

641—43.1(136B) Purpose and scope. This chapter establishes requirements for the certification of radon measurement specialists and radon measurement laboratories. All persons performing measurements for radon or radon progeny in buildings, other than those which they own or occupy, and who provide the results of these measurements to the owner or occupant of these structures must be certified in accordance with the provisions of this chapter.

641—43.2(136B) Definitions. The following words and terms when used in this chapter shall have the following meanings, unless the context clearly indicates otherwise.

"Act" means the Iowa Radon Testing Act (Iowa Code chapter 136B).

"Building" means a structure enclosed with exterior walls or fire walls, built, erected and framed of component structural parts, and designed for the housing, shelter, enclosure and support of individuals.

"Certified person" means a certified radon measurement specialist or certified radon measurement laboratory as defined by this chapter.

"Certified radon measurement laboratory (certified laboratory)" means a commercial laboratory which may analyze samples or test for radon decay products and meets the provisions for certification in this chapter.

"Certified radon measurement specialist (certified specialist)" means an individual who performs radon or radon progeny measurements in buildings and provides professional or expert advice on radon and radon progeny measurements, radon entry routes, and other radon-related activities; is knowledgeable in the health risk associated from exposure to radon; and who meets the provisions for certification in this chapter.

"Compensation" means any form of monetary gain which in any way directly or indirectly results from a radon or radon progeny measurement being conducted.

"Department" means the Iowa department of public health.

"EPA" means the United States Environmental Protection Agency.

"Laboratory" means any person performing analysis, not at a testing site, on a passive device to measure radon or radon progeny (charcoal canister, alpha-track, electret, etc.).

"NEHA" means the National Environmental Health Association.

"NRSB" means the National Radon Safety Board.

"Person" means an individual, corporation, partnership, firm, association, trust, estate, public or private institution, group, agency, any other state or political subdivision or agency, and a legal successor, representative, agency or agencies of the entities listed in this paragraph.

"Picocurie per liter" means a quantity of radioactive material per liter of air that will produce 2.2 disintegrations per minute of radiation. It may be used as a measure of the concentration of radon gas in air. One curie is equivalent to one trillion picocuries.

"Radon" means the radioactive noble gas radon-222.

"Radon progeny" means the short-lived radionuclides formed as a result of the decay of radon-222, including polonium-218, lead-214, bismuth-214, and polonium-214.

"Working level (WL)" means the concentration of radon progeny that will result in 130,000 million electron volts of alphaparticle energy released per liter of air. Working level is a measure of radon decay product concentration in air.

641—43.3(136B) General provisions.

43.3(1) Except as provided in this chapter, no person may test for the presence of radon or radon progeny in the state of Iowa unless the person has been certified by the department of public health. This requirement also applies to persons whose place of business is located in Iowa, or in a state other than Iowa, and who offer radon testing to residents of Iowa either directly or through the mail.

43.3(2) Individual qualifications for radon measurement specialist. No individual may be certified as a radon measurement specialist unless all of the following conditions are met:

a. Be at least 18 years of age at the time of application;

b. Possess two years of relevant professional work experience. Relevant postsecondary education may be substituted for professional work experience. Relevant postsecondary education includes a college curriculum in architecture, engineering, building construction or the physical sciences. Relevant professional work experience includes house testing/evaluation for the presence of radon, design and installation of heating, ventilation and air-conditioning systems, design or construction of buildings, or related activities approved by the department of public health;

c. Use detection devices approved by EPA and the department to measure radon. The detection device must be obtained from an Iowa certified radon measurement laboratory. When a portable electronic detection device is used, the device must be calibrated on at least an annual basis by the manufacturer, or by persons acceptable to the department. The records of calibration must be maintained for review by the department or agents of the department.

43.3(3) Individual qualifications for radon measurement laboratory. No business may be certified as a radon measurement laboratory unless the business:

a. Is successfully enrolled with either the NEHA or NRSB Radon/Radon Progeny Measurement Proficiency Program (RMPP), and

b. Follows all applicable EPA and department protocols and guidelines.

43.3(4) No certification shall be approved unless the applicant demonstrates to the department that the following conditions are met:

a. Has in place a quality assurance plan and quality control procedures, approved by the department, for all measurements and equipment;

b. Has shown the ability or intention to comply with the Radon Testing and Abatement Act, Iowa Code chapter 136B, or this chapter, or has been able or willing to conduct radon-related activities forthrightly and honestly with the applicant's clients.

43.3(5) Requirements for continued certification shall include the following:

a. A certified person located within the state of Iowa shall allow the department, its agents, employees, and contractors, upon presentation of appropriate credentials, to have access without undue delay to the person's facilities, offices and files for inspection and examination of records and equipment. The certified person shall also allow the department, its agents, employees, and contractors to accompany the person while performing any radon measurement, for the purpose of inspection of those activities, with the approval of the property owner or resident on whose property the activities are being performed.

b. The certified person shall remain in compliance with the Act and this chapter.

641—43.4(136B) Application for certification.

43.4(1) An application for certification or renewal of certification as a radon measurement specialist or a radon measurement laboratory shall be filed on a form prescribed by the department and shall contain complete and accurate information.

a. An application for a radon measurement specialist must include:

(1) Proof of successful completion of a department-approved training course on radon/radon progeny measurements. A certificate of attendance is required.

(2) Proof of successful completion of an examination approved by this department. A letter from NEHA or NRSB showing a passing score for the radon measurement specialist examination fulfills this requirement.

(3) Proof of two years of postsecondary education in architecture, natural science, engineering, or a related discipline. A college transcript must be included to fulfill this requirement or a detailed resume evidencing two years of relevant professional work experience, such as conducting professional home inspections; or the design and installation of heating, ventilation and air-conditioning systems; or the design or construction of buildings; or related activities approved by the department; or a combination of professional work experience and postsecondary education.

(4) A quality assurance/quality control (QA/QC) plan for all measurement devices and equipment. If laboratory devices are used, the names and addresses of the Iowa certified radon measurement

laboratories must be included. If a continuous radon monitor is used, the name of the manufacturer, model, and picture of the monitor must be included. The manufacturer of any device used must have EPA or other national agency approval which indicates the device has been approved for measuring radon. Only measurement devices from Iowa certified radon measurement laboratories or a continuous radon monitor that has been satisfactorily calibrated and approved by the Iowa radon program are allowed for use in performing radon measurements.

(5) Standard operating procedures (SOPs). Procedures must include information concerning the placement and pickup of devices used, who performs the tests, and what measures will be used to ensure all tests are in conformance with EPA protocols and procedures.

(6) A signed statement that the individual will follow all EPA radon measurement guidelines and protocols.

(7) A signed statement that the individual will submit radon test results every 30 days to the Iowa radon program within the department. The radon test results may be submitted on a form, a diskette, or through E-mail in a manner that is approved by the department.

(8) A signed statement that the individual will keep all records for a minimum of five years after the radon test is completed.

(9) A copy of the confidentiality waiver that reports results to the customer as outlined in Iowa Code section 136B.2.

(10) A signed statement that the individual will submit to the department within 14 working days any changes in the original application and that the individual will acquire at least eight hours of continuing education credits every two years before certification is renewed.

(11) The fee specified in 43.4(6).

b. An application for a radon measurement laboratory must include:

(1) Proof of successful participation in the NEHA or NRSB Radon/Radon Progeny Measurement Proficiency Program.

(2) A quality assurance plan and quality control procedures for all measurements and equipment.

(3) A signed statement that all EPA, NEHA and NRSB and any department measurement guidelines and protocols will be followed.

(4) Name(s) and address(es) of any retail operation(s) selling the laboratory's testing service(s) within Iowa.

(5) A signed statement that all changes in the original application will be submitted to the department within 14 working days.

(6) The fee specified in 43.4(6).

43.4(2) The department may require the applicant to submit supplementary statements containing additional information to enable the department to determine whether an application should be approved or denied, or whether a previously issued certification should be amended, suspended, or revoked.

43.4(3) Each application or supplementary statement shall be signed by either the applicant personally, or a person authorized in writing by the applicant to do so on the applicant's behalf.

43.4(4) A certification will be valid for one year following the date of issuance. No radon measurement covered by this chapter can be conducted after the expiration of the term of certification unless an application for renewal certification has been received by the department 30 days prior to the expiration date of certification and is pending approval. If the application is rejected, no radon test or measurement may be conducted by that applicant in the state of Iowa if a financial arrangement is involved.

43.4(5) Renewal of an annual certification must contain all the information requested in the Notice of Renewal for certification along with the fee specified in subrule 43.4(6). The application to renew credentials must also include a signed and dated continuing education form and a copy of a course certificate which indicates the name of the individual receiving continuing education, the amount of continuing education the individual has received, and the date the continuing education course was given.

43.4(6) Radon certification fees. Any person wishing to become certified as a radon measurement specialist or as a radon measurement laboratory is required to pay fees sufficient to defray the cost of administering this chapter. Fees which must be submitted are as follows:

a. Application fee.

(1) Each person with Iowa residency wishing certification under the provisions of 641—43.1(136B) shall pay a nonrefundable $25 application fee.

(2) Each person without Iowa residency wishing certification under 641—43.1(136B) shall pay a nonrefundable $100 application fee.

b. Annual certification fee.

(1) Each individual requesting certification and renewing certification as a radon measurement specialist must pay a nonrefundable annual fee of $250.

(2) Each person requesting certification and renewing certification as a radon measurement laboratory must pay a nonrefundable annual fee of $500.

c. Each person wishing to give reciprocal recognition of credentials from another jurisdiction must pay the appropriate fees in 43.4(6).

d. Returned check and late fees. Persons who fail to pay required fees to the department are subject to the following penalty(ies):

(1) $15 for each insufficient funds check submitted for payment of radon testing fees.

(2) $25 per month for failure to pay annual radon testing certification fees starting after the annual renewal date or date of expiration.

e. If payment is not received and the certification has been expired 30 days, certification will be revoked immediately. In order to regain certification, the person must reapply and pay the appropriate fees as outlined in this subrule.

641—43.5(136B) Revocation of certification.

43.5(1) The department will consider revoking or suspending any certification, in whole or in part, for:

a. Any misstatement in the application or in any supplementary statement;

b. Any condition revealed by the application, supplementary statement, report, record, or other evidence, which would warrant the department's refusal to grant a certification on an original application;

c. Any violation or failure to observe any of the applicable terms or provisions of certification, the public health law, or any other applicable rule, regulation, code or order;

d. Being discontinued or removed from the NEHA or NRSB Radon/Radon Progeny Measurement Proficiency Program;

e. Not fully cooperating with the department or its agents when field evaluations are being conducted;

f. Not attending a scheduled meeting or inspection set up by the department or its agents, when the certified person was previously notified and agreed to the time and location of the inspection;

g. Not submitting radon test data as required in 641—43.6(136B).

43.5(2) The department may deny, suspend, revoke, modify the certification of a person, impose a civil penalty, or refer the case to the office of the county attorney for possible criminal penalties pursuant to Iowa Code chapter 136B, or any combination thereof, when it finds that a certified person or a person who is not certified has committed any of the following acts:

a. Failing to submit required information or notifications in a timely manner;

b. Failing to maintain the required records;

c. Falsifying approval records, qualifications, or other information or documentation related to licensing approval;

d. Failing to comply with the training standards and requirements in 43.3(2);

e. Submitting in the application for approval or reapproval false or misleading statements which the department relied upon in approving the application;

f. Failing to comply with federal, state, or local statutes and regulations, including the requirements of this chapter;

g. Knowingly making misleading, deceptive, untrue, or fraudulent representations involving radon, or engaging in unethical conduct or practice harmful or detrimental to the public. Proof of actual injury need not be established;

h. Using untruthful or improbable statements in advertisements. Use of these statements includes, but is not limited to, the presentation of information to the public by training programs that is false, deceptive, or misleading, or that is promoted through fraud or misrepresentation;

i. Falsifying reports and records required by this chapter;

j. Accepting any fee by fraud or misrepresentation;

k. Revocation, suspension, or other disciplinary action taken by a certification or licensing authority of this state, another state, territory, or country; or failure by the firm or individual to report such action in writing within 30 days of the final action by such certification or licensing authority. A stay by an appellate court shall not negate this requirement; however, if such disciplinary action is overturned or reversed by a court of last resort, the report shall be expunged from the records of the board;

l. Failing to comply with the terms of a department order or the terms of a settlement agreement or consent order;

m. Representation by a firm or individual that the firm or individual is certified when the certification has been suspended or revoked or has not been renewed;

n. Failing to respond within 30 days of receipt of communication from the department that was sent by registered or certified mail;

o. Engaging in any conduct that subverts or attempts to subvert a department investigation;

p. Failing to comply with a subpoena issued by the department or failing to cooperate with a department investigation; or

q. Failing to pay costs assessed in any disciplinary action.

641—43.6(136B) Reporting requirements.

43.6(1) A certified person must submit to the department within 30 days after any radon/radon progeny testing, or at the request of the department prior to testing, the address or location of the building, the name and telephone number of the owner(s) of the building where the radon testing will be conducted and the results of any tests performed.

43.6(2) The results for each test conducted shall include, but not necessarily be limited to:

a. The method used for radon or radon decay product testing, media tested, and conditions under which the testing was or will be performed.

b. The level or floor of building where the test(s) was or will be conducted.

c. The results of the test(s) in picocuries/liter (pCi/l) of radon gas or working level (WL) of radon decay products.

d. The date on which the test was or will be conducted.

e. The purpose of the test.

43.6(3) Rescinded IAB 5/29/91, effective 5/10/91.

43.6(4) A certified person shall:

a. Cooperate with the department when conducting field evaluations.

b. Notify the department within 14 days of any changes in testing results or procedures.

c. Not disclose to any other person, except to the department, the address or owner of a nonpublic building that was tested for radon gas or radon progeny, unless the owner of the building waives this right of confidentiality in writing.

641—43.7(136B) Training and continuing education programs. Each person conducting radon-related activities shall complete a radon measurement training program approved by the department. All certified individuals must participate in a continuing education program every other year that consists of a minimum of eight hours of department-approved courses or seminars on either radon measurement or mitigation or both.

641—43.8(136B) Exemptions. Certification requirements shall not apply to:

1. Those persons who test for radon/radon decay products in buildings that they own.

2. Those persons testing for radon/radon decay products as part of scientific research approved by the department.

3. State officials conducting radon testing as part of the state's radon testing program or local officials acting on behalf of the state, and approved by the department.

4. Officials conducting radon testing as part of government programs in the United States or contractors working for the United States government.

641—43.9(136B) Enforcement.

43.9(1) A certified individual who measures for radon or radon progeny in the state of Iowa must meet the requirements of this chapter.

43.9(2) Any laboratory providing analysis services for radon detectors used in Iowa must meet the provisions of this chapter.

43.9(3) Any certified individual is prohibited from using radon measurement devices in Iowa obtained from a laboratory which is not certified under the provisions of this chapter.

641—43.10(136B) Penalties. It is unlawful for an individual to function as a radon measurement specialist or radon measurement laboratory in violation of the provisions of the Iowa radon testing Act or of any rule adopted pursuant to the Act. Persons convicted of violating the provisions of the Act or the rules adopted pursuant to the Act shall be guilty of a serious misdemeanor (Iowa Code section 136B.5).

641—43.11(136B) Persons exempted from certification. Persons providing radon or radon progeny measurement devices to the public, but not conducting physical tests for the presence of radon or radon progeny with the measurement devices may do so under the following conditions:

1. They must provide measurement devices obtained from a laboratory certified in Iowa.

2. A valid visible expiration date must be permanently affixed to each measurement device.

3. In addition to the required laboratory instructions regarding measurement procedures, each measurement device must be accompanied by clear directions on where to obtain additional information and interpretation for test results. The certified laboratory or a certified specialist must be included as one of the sources of information and interpretation.

These rules are intended to implement Iowa Code chapter 136B.

[Filed 9/30/88, Notice 8/10/88—published 10/19/88, effective 11/23/88]
[Filed 1/14/91, Notice 10/17/90—published 2/6/91, effective 3/13/91]
[Filed emergency 5/10/91—published 5/29/91, effective 5/10/91]
[Filed 5/8/92, Notice 4/1/92—published 5/27/92, effective 7/1/92]
[Filed 9/14/92, Notice 8/5/92—published 9/30/92, effective 11/4/92]
[Filed 3/14/02, Notice 2/6/02—published 4/3/02, effective 5/8/02]
[Filed 9/18/06, Notice 8/2/06—published 10/11/06, effective 11/15/06]

CHAPTER 44
MINIMUM REQUIREMENTS FOR RADON MITIGATION

641—44.1(136B) Purpose and scope. This chapter establishes requirements for the credentialing of radon mitigation specialists. All persons performing abatement for radon or radon progeny in buildings, other than buildings which the persons occupy or are constructing for their own occupancy, must be credentialed in accordance with the provisions of this chapter. Credentialed mitigation specialists are responsible for ensuring that all radon mitigation systems for which they are responsible are installed following guidelines that are provided in this chapter.

641—44.2(136B) Definitions. The following words and terms when used in this chapter shall have the following meanings, unless the context clearly indicates otherwise.

"Active mitigation system" means any system or materials installed as an active part of a ventilation system used for the purpose of reducing radon or radon progeny concentrations by means of an in-line fan.

"ASTMI E2121" means the American Society for Testing Materials International E2121, Standard Practice for Radon Mitigation Systems in Existing Low-Rise Residential Buildings.

"Credentialed radon mitigation specialist (mitigation specialist)" means an individual who evaluates diagnostic tests to determine appropriate radon or radon progeny mitigation strategies for a building, designs mitigation systems, installs or supervises the installation of radon or radon progeny mitigation techniques on buildings, and meets the requirements for credentialing provided by this chapter.

"Department" means the Iowa department of public health.

"Diagnostic tests" means tests performed or procedures used to determine appropriate mitigation methods for a building.

"EPA" means the United States Environmental Protection Agency.

"Mitigator" means a person who installs mitigation systems for the purpose of abating radon levels within buildings.

"Passive mitigation system" means any system or materials installed for the purpose of reducing radon or radon progeny concentrations without the use of an in-line fan.

"pCi/L" means a measurement of radon in picocuries per liter.

"Radon" means the radioactive noble gas radon-222.

"Radon progeny" means the short-lived radionuclides formed as a result of the decay of radon-222.

"RMS" means EPA Radon Mitigation Standards.

"Working level month (WLM)" means a cumulative exposure to radon decay products calculated by multiplying the radon daughter concentration in units of working levels by the number of hours exposed and dividing by 170.

641—44.3(136B) General provisions.

44.3(1) Except as provided in this chapter, no person may mitigate for radon or radon progeny in Iowa for a fee or other remuneration unless such a person has been credentialed by the department.

44.3(2) Individual qualifications for radon mitigation specialist. No individual may be credentialed as a radon mitigation specialist unless all of the following conditions are met. The individuals shall:

a. Be at least 18 years of age at the time of application.

b. Possess three years of relevant professional work experience. Relevant postsecondary education may be substituted on a year-for-year basis for two of the three years of relevant professional work experience. Relevant postsecondary education includes a college curriculum in architecture, engineering, building construction, or the physical sciences. Relevant professional work experience includes the design or construction of buildings, or associated heating, ventilation, and air-conditioning systems, or closely related activities approved by the department.

c. Have successfully completed a combined radon measurement/mitigation course approved by the department and a radon mitigation examination approved by the department.

44.3(3) All applicants for credentialing must comply with Iowa Code chapter 136B and submit the following to the department:

a. An acceptable mitigation worker protection plan to follow when performing mitigation installations which includes, but is not limited to:

(1) Procedures to follow to keep radiation exposure to workers as low as is reasonably achievable.

(2) Methods to follow to reduce or minimize the radon concentration in the work area.

(3) Criteria for wearing properly fitted respirators anytime the radon decay product level is above one working level.

b. An acceptable quality assurance plan to follow when performing mitigation installations which includes, but is not limited to:

(1) A description of all diagnostic tests performed to determine the mitigation strategy, names of the individuals performing the diagnostic tests, and any other related services offered.

(2) Ensuring that all instruments are properly calibrated according to the manufacturer's recommendations.

(3) A description of all mitigation materials and systems offered.

c. A complete and accurate application on a form prescribed by the department.

44.3(4) Requirements for continued credentialing shall include, at a minimum, the following conditions:

a. An Iowa credentialed person shall allow the department, its agents, employees, and contractors, upon presentation of appropriate credentials and with just cause, to have access during regular business hours without undue delay to their facilities, offices and files for inspection and examination of records and equipment. Credentialed persons shall also allow the department, its agents, employees, and contractors to accompany them while performing any radon abatement measures, for the purpose of inspection of those activities, with the approval of the property owner or resident on whose property the activities are being performed.

b. The credentialed person shall remain in compliance with the Iowa Radon Testing and Abatement Act and this chapter. Any material changes in the information provided in the original application, including changes in credentialed personnel, shall be reported in writing to the department within ten working days of the change.

c. The credentialed person shall comply with department standards and all the requirements as stated in EPA's Radon Mitigation Standards (RMS) EPA 402-R-93-078, October 1993 (Revised April 1994) and ASTMI E2121. All "shoulds" in the above document shall be "shalls" according to department standards.

44.3(5) A credentialed person shall:

a. Fully cooperate with the department or its agents when field evaluations are conducted.

b. Be present during scheduled visits by the department.

c. Not disclose to any other person, except to the department or its agents, the addressee or owner of a nonpublic building, the radon levels present in the building or abatement measures needed or performed, unless the building owner waives this right of confidentiality in writing.

d. Ensure that each building is tested for radon levels before and after mitigation work is performed. Such tests shall be of sufficient type, duration and consistency and shall be performed at such times and under such ventilation conditions as to allow for comparison of before and after mitigation radon levels. Premitigation and postmitigation radon tests shall be performed independently by a measurement specialist or technician who is not employed by the same firm as the mitigation specialist performing the mitigation. Postmitigation radon tests shall be started no sooner than one day after mitigation is completed. This requirement is not binding if the building owner waives the procedure, on a form prescribed by the department, before the mitigation process has started.

641—44.4(136B) Application for credentialing.

44.4(1) An application for credentialing or renewal of credentials as a radon mitigation specialist shall be filed on a form prescribed by the department, shall contain complete and accurate information and shall be accompanied by the appropriate fees as outlined in subrule 44.4(6).

44.4(2) The department may require the applicant to submit supplementary statements containing additional information to enable the department to determine whether an application should be approved or denied, or whether a previously issued credential should be amended, suspended, or revoked.

44.4(3) Each application or supplementary statement shall be signed by either the applicant personally, or a person authorized in writing by the applicant to do so on the applicant's behalf.

44.4(4) A credential will be valid for one year following the date of issuance. No radon abatement covered by this chapter can be commenced after the expiration of the term of credentialing unless an application for renewal has been received by the department within 30 days of the notice of expiration and the renewal application is deemed complete and acceptable by the department. All radon mitigation work commenced prior to expiration of credentialing must be completed within 30 days of the expiration date if renewal is not accomplished. If the application is rejected, no radon abatement may be conducted by that applicant in the state of Iowa if a financial arrangement is involved.

44.4(5) An application to renew credentials must be on a form approved by the department and must include the number of mitigation systems installed for the renewal period and any changes in the initial credentialing application, along with the fee specified in subrule 44.4(6).

44.4(6) Radon mitigation credentialing. Any person wishing to become credentialed as a radon mitigation specialist shall be required to pay fees sufficient to defray the cost of administering this chapter.

a. Application fee.

(1) Each person with Iowa residency wishing certification under the provisions of 641—Chapter 44 shall pay a nonrefundable $25 application fee.

(2) Each person without Iowa residency wishing certification under 641—Chapter 44 shall pay a nonrefundable $100 application fee.

b. Annual credentialing fee. Each individual requesting credentialing must:

(1) Pay an initial fee of $150 which is refundable if credentialing is not completed.

(2) Pay annually a renewal fee of $150 or a mitigation system installation surcharge fee of $40 per mitigation system installed (as defined in 641—44.2(136B)) costing more than $200, whichever is greater. With each renewal, a credentialed person must submit legal documentation of the number of mitigation systems installed the previous credentialing year. If an individual decides not to renew credentials the following year, all surcharge fees are to be paid in full within 30 days of the date of expiration of the credentials.

c. Returned check and late fees.

(1) Persons who fail to pay required fees to the department are subject to the following penalty(ies):

1. $15 for each insufficient funds check submitted for payment of radon mitigation fees.

2. $25 per month for failure to pay annual radon mitigation credentialing fees starting after the annual renewal date or date of expiration.

(2) If payment is not received and the certification has been expired 30 days, certification will be revoked immediately. In order to regain certification, the individual must reapply and pay the appropriate fees as outlined in this subrule.

d. Applications for initial and renewal credentialing must be submitted along with the appropriate fees specified in this subrule to the Division of Environmental Health, Iowa Department of Public Health, Lucas State Office Building, Des Moines, Iowa 50319-0075. The fee must be in the form of a check or money order made payable to the Iowa Department of Public Health and must include on the check or money order an indication of the purpose of the fee (i.e., radon mitigation credentialing).

e. Each person wishing to receive reciprocal recognition of credentialing from another jurisdiction must pay the appropriate fees as outlined in this subrule.

641—44.5(136B) Revocation of credentialing. The department will follow the procedures set forth in Iowa Code chapter 17A when revoking or suspending any credentials, in whole or in part. The department may deny, suspend, revoke, or modify the credentials of a person, or may impose a civil penalty or may refer the case to the office of the county attorney for possible criminal penalties pursuant to Iowa Code chapter 136B when it finds that a credentialed person or a person who is not credentialed has committed any of the following acts:

1. Any material misstatement in the application or in any supplementary statement.

2. Any material misstatement in the renewal application or supplementary statement received upon renewal.

3. Any condition revealed by an inspection of the applicant, the application, supplementary statement, report, record, or other evidence, which would warrant refusal by the department's agents or employees to grant a credentialing on an original application.

4. Falsifying approval records, qualifications, or other information or documentation related to licensing approval.

5. Any violation or failure to observe any of the applicable terms or provisions of credentialing, the public health law, or any other applicable rule, radon testing rule, ordinance, regulation, code or order.

6. Not completing the installation of a radon mitigation system within 30 days of the start date or date contracted to start.

7. Failing to submit a complete and accurate renewal application form before the end of the renewal period which includes the fee specified in subrule 44.4(6).

8. Failing to correct any violation of EPA, ASTM, or department rules that was found during a previous inspection or any violation found on an initial inspection which, as determined by the department, jeopardizes the safety of the building or other occupants.

9. Accepting compensation for installing ineffective radon remedies or for not dropping radon levels below 4 pCi/L in the area or level of the building where a radon mitigation system was installed.

10. Accepting compensation for installing active or nonactive radon mitigation systems that are not acceptable to the department or that do not comply with the requirements of this chapter.

11. Failing to fully cooperate with the department or its agents when field evaluations are conducted.

12. Failing to attend a scheduled meeting or inspection set up by the department or its agents, when the person holding the credentials was previously notified and agreed to the time and location of the inspection.

13. Failing to submit required information or notifications in a timely manner.

14. Failing to maintain the required records in 641—44.6(136B), and in EPA's Radon Mitigation Standards (RMS) EPA 402-R-93-078, October 1993 (Revised April 1994), and ASTMI E2121 (NOTE: EPA has incorporated E2121 by reference and retained EPA's Radon Mitigation Standards (RMS) in effect until at least 2007).

15. Failing to comply with the training standards and requirements in 641—44.7(136B).

16. Failing to comply with federal, state, or local statutes and regulations, including the requirements of this chapter.

17. Knowingly making misleading, deceptive, untrue, or fraudulent representations involving radon, or engaging in unethical conduct or practice harmful or detrimental to the public. Proof of actual injury need not be established.

18. Using untruthful or improbable statements in advertisements. Use of these statements includes, but is not limited to, the presentation of information to the public by training programs that is false, deceptive, or misleading or that is promoted through fraud or misrepresentation.

19. Falsifying reports and records required by this chapter.

20. Accepting any fee by fraud or misrepresentation.

21. Revocation, suspension, or other disciplinary action taken by a certification or licensing authority of this state, another state, territory, or country; or failure by the firm or individual to report such action in writing within 30 days of the final action by such certification or licensing authority. A stay by an appellate court shall not negate this requirement; however, if such disciplinary action is overturned or reversed by a court of last resort, the report shall be expunged from the record.

22. Failing to comply with the terms of a department order or the terms of a settlement agreement or consent order.

23. Representation by a firm or individual that the firm or individual is credentialed when the credential has been suspended or revoked or has not been renewed.

24. Failing to respond within 30 days of receipt of communication from the department or an agent of the department that was sent by registered or certified mail.

25. Engaging in any conduct that subverts or attempts to subvert a department investigation.

26. Failing to comply with a subpoena issued by the department or failure to cooperate with a department investigation.

27. Failing to pay costs assessed in any disciplinary action.

641—44.6(136B) Additional record-keeping requirements. A credentialed radon mitigation specialist shall maintain, for five years, a report of each mitigation activity which includes, but is not necessarily limited to:

1. The address or location of the building.

2. The name and phone number of the owner(s) of the building where the radon mitigation is conducted.

3. A written description of each mitigation system and materials installed, diagnostic test results and cost of each system.

4. The name of the certified radon measurement specialist or technician used to perform radon or radon progeny testing before and after radon mitigation of a building. This requirement does not apply if the building owner has waived the testing requirement set forth in 641—subrule 44.3(5) and the mitigation specialist maintains a copy of the signed waiver.

5. The results of any initial or follow-up radon or radon progeny measurements performed and the measurement methods utilized. This requirement does not apply if the building owner has waived the testing requirement set forth in 641—subrule 44.3(5) and the mitigation specialist maintains a copy of the signed waiver.

6. The results of the postmitigation radon measurements performed, including method of measurement and all pertinent dates. This requirement does not apply if the building owner has waived the testing requirement set forth in 641—subrule 44.3(5) and the mitigation specialist maintains a copy of the signed waiver.

641—44.7(136B) Continuing education. All credentialed individuals must participate in a continuing education program every other year that consists of a minimum of eight hours of department-approved courses or seminars on radon mitigation or measurement.

641—44.8(136B) Exemptions. Credentialing requirements shall not apply to:

1. Those persons who mitigate radon/radon decay products in buildings that they occupy for their own use.

2. Those persons mitigating radon/radon decay products as part of scientific research approved by the department.

641—44.9(136B) Enforcement. A credentialed individual who mitigates for radon or radon progeny in the state of Iowa must meet the requirements of Chapter 44.

641—44.10(136B) Penalties. It is unlawful for an individual to function as a radon mitigation specialist in violation of the provisions of the Iowa radon testing and abatement Act. Persons convicted of violating the provisions of the Iowa radon testing and abatement Act or 641—Chapter 44 shall be guilty of a serious misdemeanor.

These rules are intended to implement Iowa Code chapter 136B.

[Filed emergency 11/9/89 after Notice 10/4/89—published 11/29/89, effective 11/9/89]
[Filed 9/14/92, Notice 8/5/92—published 9/30/92, effective 11/4/92]
[Filed 3/14/02, Notice 2/6/02—published 4/3/02, effective 5/8/02]
[Filed 9/18/06, Notice 8/2/06—published 10/11/06, effective 11/15/06]
[Filed 3/16/07, Notice 1/31/07—published 4/11/07, effective 5/16/07]
[Filed 5/14/08, Notice 4/9/08—published 6/4/08, effective 7/9/08]

CHAPTER 45
RADIATION SAFETY REQUIREMENTS FOR INDUSTRIAL RADIOGRAPHIC OPERATIONS

[Prior to 8/5/92, see 641—41.4(136C)]

641—45.1(136C) General requirements for industrial radiography operations.

45.1(1) *Purpose and scope.*

a. The rules in this chapter establish radiation safety requirements for using sources of radiation for industrial radiography. The requirements of this chapter are in addition to, and not in substitution for, other applicable requirements of 641—Chapters 38, 39, and 40. The rules in this chapter apply to all licensees or registrants who use sources of radiation for industrial radiography.

b. All references to any Code of Federal Regulations (CFR) in this chapter are those in effect as of November 5, 2014.

45.1(2) *Definitions.* For the purpose of this chapter, the definitions of 641—Chapter 38 may also apply. As used in this chapter, the following definitions apply:

"Annual refresher safety training" means a review conducted or provided by the licensee for its employees on radiation safety aspects of industrial radiography. The review may include, as appropriate, the results of internal inspections, new procedures or equipment, new or revised regulations, accidents or errors that have been observed, and should also provide opportunities for employees to ask safety questions.

"Associated equipment" means equipment that is used in conjunction with a radiographic exposure device to make radiographic exposures that drives, guides, or comes in contact with the source, e.g., guide tube, control tube, control (drive) cable, removable source stop, "J" tube and collimator when it is used as an exposure head.

"Cabinet X-ray system" means an X-ray system with the X-ray tube installed in an enclosure independent of existing architectural structures except the floor on which it may be placed. The cabinet X-ray system is intended to:

1. Contain at least that portion of a material being irradiated;
2. Provide radiation attenuation; and
3. Exclude personnel from its interior during generation of radiation. Included are all X-ray systems designed primarily for the inspection of carry-on baggage at airline, railroad, and bus terminals, and in similar facilities. An X-ray tube used within a shielded part of a building, or X-ray equipment which may temporarily or occasionally incorporate portable shielding, is not considered a cabinet X-ray system.

"Certifiable cabinet X-ray system" means an existing uncertified X-ray system that has been modified to meet certification requirements specified in 21 CFR 1020.40.

"Certified cabinet X-ray system" means an X-ray system which has been certified in accordance with 21 CFR 1010.2 as being manufactured and assembled pursuant to the provisions of 21 CFR 1020.40.

"Certifying entity" means an independent certifying organization meeting the requirements of Appendix A in 10 CFR Part 34 or an agreement state meeting the requirements in Appendix A, Parts II and III of 10 CFR Part 34.

"Collimator" means a small radiation shield of lead or other heavy metal that is placed on the end of a guide tube or directly onto a radiographic exposure device to restrict the size of the radiation beam when the sealed source is cranked into position to make a radiographic exposure.

"Control (drive) cable" means the cable that is connected to the source assembly and used to drive the source to and from the exposure location.

"Control drive mechanism" means a device that enables the source assembly to be moved to and from the exposure device.

"Control tube" means a protective sheath for guiding the control cable. The control tube connects the control drive mechanism to the radiographic exposure device.

"Crank-out device" means the cable, protective sheath, and handcrank used to move the sealed source from the shielded to the unshielded position to make an industrial radiographic exposure.

"Enclosed radiography" means industrial radiography conducted in an enclosed cabinet or room and includes cabinet radiography and shielded-room radiography.

"Exposure head" means a device that locates the gamma radiography sealed source in the selected working position. (An exposure head is also known as a source stop.)

"Field station" means a facility where licensed material may be stored or used and from which equipment is dispatched.

"Fluoroscopic imaging assembly" means a subsystem in which X-ray photons produce a fluoroscopic image. It includes the image receptors such as the image intensifier and spot-film device, electrical interlocks, if any, and structural material providing linkage between the image receptor and source assembly.

"GED" means general educational development.

"Guide tube (projection sheath)" means a flexible or rigid tube (i.e., "J" tube) for guiding the source assembly and the attached control cable from the exposure device to the exposure head. The guide tube may also include the connections necessary for attachment to the exposure device and to the exposure head.

"Hands-on experience" means experience in all of those areas considered to be directly involved in the radiography process.

"I.D. card" means the document issued by the agency, another agreement state, a licensing state, or third-party certification to industrial radiographers following completion of requirements stated in 45.1(10)*"b."*

"Independent certifying organization" means an independent organization that meets all of the criteria of Appendix A in 10 CFR Part 34.

"Lay-barge radiography" means industrial radiography performed on any water vessel used for laying pipe.

"Lixiscope" means a portable light-intensified imaging device using a sealed source.

"Lock-out survey" means a radiation survey performed to verify that a sealed source is in its shielded position. The lock-out survey is performed before moving the radiographic exposure device or source changer to a new location or when securing the radiographic exposure device or source changer.

"Minimal threat" means that during the operations of electronic devices capable of generating or emitting fields of radiation:

1. No deliberate exposure of an individual occurs;
2. The radiation is not emitted in an open beam configuration; and
3. No known physical injury to an individual has occurred.

"Offshore" means within the territorial waters of the United States.

"Offshore platform radiography" means industrial radiography conducted from an offshore platform over a body of water.

"Permanent radiographic installation" means an enclosed shielded room, cell, or vault, not located at a temporary job site, in which radiography is performed.

"Practical examination" means a demonstration through practical application of the safety rules and principles in industrial radiography including use of all appropriate equipment and procedures.

"Radiation safety officer" means an individual named by the licensee or registrant who has a knowledge of, responsibility for, and authority to enforce appropriate radiation protection rules, standards, and practices on behalf of the licensee or registrant and who meets the requirements of 45.1(10)*"d."*

"Radiographer" means any individual who has successfully completed the training, testing, and documentation requirements of 45.1(10)*"b,"* who performs or personally supervises industrial radiographic operations, and is responsible to the licensee or registrant for ensuring compliance with the requirement of these rules and all license and certificate of registration conditions.

"Radiographer certification" means written approval received from a certifying entity stating that an individual has satisfactorily met certain established radiation safety, testing, and experience criteria.

"Radiographer's assistant" means any individual who has successfully completed the training, testing, and documentation requirements of 45.1(10)*"a"* and who uses sources of radiation and related handling tools or radiation survey instruments under the direct supervision of a radiographer trainer.

"Radiographer trainer (instructor)" means any individual who instructs and supervises radiographer's assistants during on-the-job training and who meets the requirements of 45.1(10)*"c."*

"Radiographic exposure device" means any instrument containing a sealed source fastened or contained therein, in which the sealed source or shielding thereof may be moved or otherwise changed from a shielded to unshielded position for purposes of making a radiographic exposure (e.g., camera), or any other X-ray industrial system whereby a permanent or semipermanent image is recorded on an image receptor by action of ionizing radiation.

"Radiographic operations" means all activities associated with the presence of radioactive sources or radiation in a radiographic exposure device during use of the device or transport (except when being transported by a common or contract transport), to include surveys to confirm the adequacy of boundaries, setting up equipment and any activity inside restricted area boundaries.

"Radiographic personnel" means any radiographer or radiographer's assistant.

"Residential location" means any area where structures in which people lodge or live are located, and the grounds on which such structures are located including, but not limited to, houses, apartments, condominiums, and garages.

"Shielded position" means the location within the radiographic exposure device or source changer where the sealed source is secured and restricted from movement.

"Shielded-room radiography" means industrial radiography conducted in a room shielded so that radiation levels at every location on the exterior meet the limitations specified in 641—40.26(136C).

"Source assembly" means an assembly that consists of the sealed source and a connector that attaches the source to the control cable. The source assembly may also include a stop ball used to secure the source in the shielded position.

"Source changer" means a device designed and used for replacement of sealed sources in radiographic exposure devices, including those source changers also used for transporting and storage of sealed sources.

"Source container" means a shielded device in which sealed sources are secured, transported, and stored.

"Storage area" means any location, facility, or vehicle which is used to store, to transport, or to secure a radiographic exposure device, a storage container, or a sealed source when it is not in use and which is locked or has a physical barrier to prevent accidental exposure, tampering with, or unauthorized removal of the device, container, or source.

"Storage container" means a shielded device in which sealed sources are secured, transported, and stored.

"S-tube" means a tube through which the radioactive source travels when inside a radiographic exposure device.

"Temporary job site" means any location where radiographic operations are conducted and where licensed material may be stored other than the location(s) listed in a specific license or certificate of registration.

"Trainee status card" means the document issued by the agency following completion of the requirements of 45.1(10)*"a"*(1) and (2).

"Transport container" means a package that is designed to provide radiation safety and security when sealed sources are transported and which meets all applicable requirements of the U.S. Department of Transportation.

"Underwater radiography" means industrial radiography performed when the radiographic exposure device and related equipment are beneath the surface of the water.

45.1(3) *Exemptions.*

a. Uses of certified and certifiable cabinet X-ray systems designed to exclude individuals are exempt from the requirements of this chapter, except for the requirements of 45.2(6)*"b"* and *"c."*

b. Industrial uses of lixiscopes are exempt from the requirements in this chapter.

c. Radiation machines determined by the agency to constitute a minimal threat to human health and safety in accordance with 641—subrule 38.3(1) are exempt from the rules in this chapter, except for the requirements of this subrule.

45.1(4) *Receipt, transfer, and disposal of sources of radiation.* Each licensee and registrant shall maintain records showing the receipt, transfer, and disposal of sources of radiation. These records shall include the date, the name of the individual making the record, the radionuclide, number of curies or mass (for DU), and the make, model, and serial number of each source of radiation and device, as appropriate. Records shall be maintained for three years after they are made.

45.1(5) *Radiation survey instruments.*

a. The licensee or registrant shall maintain sufficient calibrated and operable radiation survey instruments at each location where sources of radiation are present to make physical radiation surveys as required by this chapter and 641—subrule 40.36(1). Instrumentation required by this subrule shall have a range such that 2 millirems (0.02 millisievert) per hour through 1 rem (0.01 sievert) per hour can be measured.

b. Notwithstanding the requirements of 641—subrule 40.36(3) each radiation survey instrument shall be calibrated:

(1) At energies appropriate for use and at intervals not to exceed six months and after each instrument servicing;

(2) Such that accuracy within plus or minus 20 percent of the calibration source can be demonstrated at each point checked;

(3) At 2 points located approximately 1/3 and 2/3 of full-scale on each scale for linear scale instruments; at midrange of each decade, and at 2 points of at least 1 decade for logarithmic scale instruments; and at 3 points between 2 and 1000 mrem per hour for digital instruments; and

(4) By a person licensed or registered by the agency, another agreement state, or the U.S. Nuclear Regulatory Commission to perform such service.

c. Records of these calibrations shall be maintained for three years after the calibration date for inspection by the agency.

d. Each radiation survey instrument shall be checked with a radiation source at the beginning of each day of use and at the beginning of each work shift to ensure it is operating properly.

45.1(6) *Quarterly inventory.* Each licensee shall conduct a physical inventory at intervals not to exceed three months to account for all sealed sources and radiography exposure devices received and possessed. Sources of radiation include radiographic exposure devices containing depleted uranium. The records of the inventories shall be maintained for three years from the date of the inventory for inspection by the agency and shall include: the manufacturer, model number, serial number, radionuclide, number of curies, and location of each source of radiation; number of kilograms of depleted uranium shielding; date of the inventory; and name of the individual making the inventory.

45.1(7) *Utilization logs.*

a. Each licensee shall maintain utilization logs of the use of each sealed source. The logs shall include:

(1) A unique description, which includes the make, model, and serial number of each radiographic exposure device containing a sealed source or transport or storage container in which the sealed source is located;

(2) The identity and signature of the radiographer to whom the sealed source is assigned;

(3) The plant or site where each sealed source is used and the date of use; and

(4) The date(s) each sealed source is removed from storage and returned to storage.

b. Each registrant shall maintain current logs of the use of each source of radiation. The logs shall include:

(1) A unique identification, which includes the make, model and serial number of each source of radiation;

(2) The identity of the radiographer using the source of radiation;

(3) The date(s) each source of radiation is energized or used and the number of exposures made.

c. Utilization logs may be kept on clear, legible records containing all the information required by 45.1(7)*"a"* or *"b."* Copies of utilization logs shall be maintained for agency inspection for three years from the date of the recorded event. The records shall be kept at the location specified by the license or certificate of registration.

45.1(8) *Inspection and maintenance.*

a. Each licensee or registrant shall perform visual and operability checks on survey meters, radiographic exposure devices, transport and storage containers, associated equipment and source changers before use on each day the equipment is to be used to ensure that the equipment is in good working condition, that the sources are adequately shielded, and that required labeling is present. Survey instrument operability must be performed using check sources or other appropriate means.

b. Each licensee or registrant shall have written procedures and conduct a program, at intervals not to exceed three months, or prior to the first use thereafter, of inspection and maintenance of radiation machines, radiographic exposure devices, transport and storage containers, source changers, survey instruments, and associated equipment to ensure proper functioning of components important to safety. All appropriate parts shall be maintained in accordance with manufacturer's specifications. Replacement components shall meet design specifications. This program shall cover, as a minimum, the items in Appendix B of this chapter.

c. Each licensee shall have a program and written procedures for the inspection and maintenance necessary to maintain the Type B packaging used to transport radioactive materials. The program must include procedures to ensure that Type B packages are shipped and maintained in accordance with the certificate of compliance or other approval.

d. If equipment problems are found, the equipment must be removed from service until repaired.

e. The record of equipment problems and of any maintenance performed under 45.1(8) must be retained for three years after the record is made. The record must include the date of check or inspection, name of inspector, equipment involved, any problems found, and what repair or maintenance, if any, was performed.

45.1(9) *Permanent radiographic installations.* Permanent radiographic installations having high radiation area entrance controls of the type described in 641—paragraphs 40.42(1)*"b"* and *"c"* shall also meet the following requirements:

a. Each entrance that is used for personnel access to the high radiation area shall have both visible and audible warning signals to warn of the presence of radiation. The visible signal shall be activated by radiation. The audible signal shall be activated when an attempt is made to enter the installation while the source is exposed.

b. The control device or alarm system shall be tested for proper operation at the beginning of each day of equipment use. If a control device or alarm system is operating improperly, it shall be immediately labeled as defective and repaired before industrial radiographic operations are resumed. Records of these tests shall be maintained for inspection by the agency for three years from the date of the event.

45.1(10) *Training and testing for radiographic personnel.*

a. Radiographer's assistant requirements. No licensee or registrant shall permit any individual to act as a radiographer's assistant, as defined in this chapter, until:

(1) It has been documented on the appropriate agency form or equivalent that such individual has received copies of and has demonstrated an understanding of:

1. The subjects outlined in Appendix A, presented in a 40-hour course approved by the agency, another agreement state, or the U.S. Nuclear Regulatory Commission;

2. The rules contained in this chapter and the applicable sections of 641—Chapters 38, 39, and 40;

3. The appropriate conditions of license(s) or certificate(s) of registration;

4. The licensee's or registrant's operating and emergency procedures;

5. And developed competence to use, under the personal supervision of the radiographer, the licensee's or registrant's radiographic exposure devices, sealed sources, associated equipment, and radiation survey instruments that the assistant will use;

6. And has demonstrated competence in the use of radiographic exposure devices, sources, survey instruments and associated equipment described in 45.1(10)*"a"*(1) by successful completion of a practical examination covering this material.

(2) The individual possesses a current agency-issued trainee status card issued after completion of 45.1(10)*"a"*(1). Trainee status will be granted only once for each individual and is valid for no longer than two years.

b. Radiographer requirements. No licensee or registrant shall permit any individual to act as a radiographer:

(1) Until it has been documented to the agency that such individual:

1. Has completed the requirements of 45.1(10)*"a"*(1);

2. Has completed on-the-job training as a radiographic trainee supervised by one or more radiographic trainers. The on-the-job training shall be documented on the appropriate agency form or equivalent and shall include a minimum of two months (320 hours) of active participation in the performance of industrial radiography utilizing radioactive material or one month (160 hours) of active participation in the performance of industrial radiography utilizing radiation machines, or both. Individuals performing industrial radiography utilizing radioactive materials and radiation machines must complete both segments of the on-the-job training (three months or 480 hours). Active participation does not include safety meetings or classroom training;

3. Has demonstrated competence in the use of sources of radiation, radiographic exposure devices, related handling tools, and radiation survey instruments which may be employed in industrial radiographic assignments by successful completion of a practical examination covering this material;

(2) Unless the individual has successfully completed within the last five years the appropriate agency-administered examination prescribed in 45.1(10)*"f"*(2) or equivalent examination; and

(3) Unless the individual possesses a current I.D. card.

c. Radiographer trainer. No individual shall act as a radiographer trainer unless such individual:

(1) Has met the requirements of 45.1(10)*"a"*(1) and *"b"*;

(2) Has one year of documented experience as an industrial radiographer and possesses a current ID card issued at least one year prior to the application for a trainer card; and

(3) Is named on the specific license or certificate of registration issued by the agency and under which an individual is acting as a radiographer trainer, or

(4) Possesses a valid radiographer trainer card issued by the agency.

d. Radiation safety officer. The radiation safety officer shall ensure that radiation safety activities are being performed in accordance with approved procedures and regulatory requirements in the daily operation of the licensee's program.

(1) A radiation safety officer (RSO) shall be designated for every industrial radiography license and certificate of registration issued by the agency.

(2) The RSO's qualifications shall include:

1. Possession of a high school diploma or a certificate of high school equivalency based on the GED test;

2. Completion of the training and testing requirements of 45.1(10)*"a"*(1) and 45.1(10)*"b"*(1)"3," (2), and (3);

3. 2000 hours of hands-on experience as a qualified radiographer in industrial radiographic operations; and

4. Formal training in the establishment and maintenance of a radiation protection program.

The agency will consider alternatives when the RSO has either appropriate training or experience, or both, in the field of ionizing radiation and, in addition, has adequate formal training with respect to the establishment and maintenance of a radiation safety protection program.

(3) The specific duties of the RSO include, but are not limited to, the following:

1. To establish and oversee operating, emergency, and ALARA procedures and to review them regularly to ensure that the procedures are current and conform with these rules;

2. To oversee and approve all phases of the training program for radiographic personnel so that appropriate and effective radiation protection practices are taught;

3. To ensure that required radiation surveys and leak tests are performed and documented in accordance with these rules, including any corrective measures when levels of radiation exceed established limits;

4. To ensure that personnel monitoring devices are calibrated and used properly by occupationally exposed personnel, that records are kept of the monitoring results, and that timely notifications are made as required by 641—Chapter 40;

5. To ensure that any required interlock switches and warning signals are functioning and that radiation signs, ropes, and barriers are properly posted and positioned;

6. To investigate and report to the agency each known or suspected case of radiation exposure to an individual or radiation level detected in excess of limits established by these rules and each theft or loss of source(s) of radiation, to determine the cause, and to take steps to prevent its recurrence;

7. To have a thorough knowledge of management policies and administrative procedures of the licensee or registrant;

8. To assume control and have the authority to institute corrective actions including shutdown of operations when necessary in emergency situations or unsafe conditions;

9. To maintain records as required by these rules (see Appendix C);

10. To ensure the proper storing, labeling, transport, and use of exposure devices and sources of radiation;

11. To ensure that quarterly inventory and inspection and maintenance programs are performed in accordance with 45.1(6), 45.1(8), 45.2(3), and 45.3(6)*"b"*; and

12. To ensure that personnel are complying with these rules, the conditions of the license or the registration, and the operating and emergency procedures of the licensee or registrant.

e. Training and testing records. Each licensee and registrant shall maintain, for agency inspection, training and testing records which demonstrate that the applicable requirements of 45.1(10)*"a"* and *"b"* are met for all industrial radiographic personnel. Records shall be maintained until disposal is authorized by the agency. The agency shall not release records for disposal unless the records have been maintained at least three years.

f. Applications and examinations.

(1) Application.

1. An application for taking the examination shall be on forms prescribed and furnished by the agency along with the fee required in 641—subrule 38.8(3). The application shall be submitted only after the training requirements of 45.1(10)*"a"* and *"b"* have been completed.

2. An individual whose I.D. card has been suspended or revoked shall obtain prior approval from the agency to apply to take the examination.

(2) Examination. The examination shall be given for the purpose of determining the qualifications of applicants.

1. A written examination shall be held at such times and places as the agency shall determine. The scope of the examination and the methods of procedure, including determination of the passing score, shall be prescribed by the agency. The examination will emphasize the applicant's ability to safely use sources of radiation and related equipment and the applicant's knowledge of these rules.

2. A candidate failing an examination may apply for reexamination in accordance with 45.1(10)*"f"*(1) and will be reexamined. A candidate shall not retake the same version of the agency-administered examination.

3. The examination will be held at locations designated by the agency. The examination shall normally be offered quarterly. Dates, times, and locations of the examinations will be provided by the agency.

4. The examination will be in the English language.

5. To take the examination, an individual shall have a picture identification card (such as an Iowa driver's license) at the time of the examination.

6. Calculators will be permitted during the examination; however, calculators or computers with preprogrammed data or formulas, including exposure calculations, will not be permitted.

7. The examination will be a "closed book" examination.

8. Examination material shall be returned to the agency at the end of the examination. No photographic or other copying of examination questions or materials shall be permitted. Disclosure by any individual of the contents of any examination prior to the administration is prohibited.

9. Any individual observed by an agency proctor to be compromising the integrity of the examination shall be required to surrender the examination, the answer sheet, and any work paper. Such individual will not be allowed to complete the examination, will forfeit the examination fee, and will leave the examination site to avoid disturbing other examinees. Such individual may resubmit an application and an additional examination fee to take the examination not earlier than three months later.

10. The names and scores of individuals taking the examination shall be a public record.

g. Identification procedures.

(1) I.D. card.

1. An I.D. card shall be issued to each person who successfully completes the requirements of 45.1(10)*"b"* and the examination prescribed in 45.1(10)*"f"*(2) or an equivalent examination.

2. Each person's I.D. card shall contain the person's photograph.

3. The I.D. card remains the property of the state of Iowa and may be revoked or suspended under the provisions of 45.1(10)*"h."*

4. Any individual who wishes to replace the I.D. card shall submit to the agency a written request for a replacement I.D. card, stating the reason a replacement I.D. card is needed and the fee required in 641—subrule 38.8(3). The individual shall maintain in possession a copy of the request while performing industrial radiographic operations until a replacement I.D. card is received from the agency.

(2) Expiration of I.D. card. Each I.D. card expires at the end of the day, in the month and year stated on the I.D. card.

(3) Renewal of I.D. card.

1. Applications for examination to renew an I.D. card shall be filed in accordance with 45.1(10)*"f"*(1).

2. The examination for renewal of an I.D. card shall be administered in accordance with 45.1(10)*"f"*(2).

3. A renewed I.D. card shall be issued in accordance with 45.1(10)*"g"*(1).

h. Revocation or suspension of an I.D. card.

(1) Any radiographer who violates these rules may be required to show cause at a formal hearing why the I.D. card should not be revoked or suspended.

(2) When an agency order has been issued for an industrial radiographer to cease and desist from the use of radioactive material or revoking or suspending the I.D. card, the industrial radiographer shall surrender the I.D. card to the agency until such time as the order is changed or the suspension expires.

(3) An agency's inspector may, in certain instances, confiscate any radiographer's I.D. card on the spot while conducting an inspection or investigation. If the inspector determines that the activities being conducted by the radiographer are significant enough to be classified as severity I, II, or III, as specified in 641—38.5(136C), and after obtaining the approval of agency management, the inspector may take any radiographer's I.D. card. The agency will then issue a cease and desist order to the radiographer's employer, forward the I.D. card(s) to the issuing entity, and notify the U.S. Nuclear Regulatory Commission and other agreement states.

i. Exemptions. Any person using a source of radiation to determine the presence of explosives in a package or the authenticity of a piece of art is exempt from the provisions of 45.1(10)*"a"* to *"h."*

j. Reciprocity.

(1) Reciprocal recognition by the agency of an individual radiographer certification will be granted provided that:

1. The individual holds a valid certification in the appropriate category and class issued by a certifying entity as defined in 45.1(2).

2. The requirements and procedures of the certifying entity issuing the certification require the same or comparable certification standards as those required by 45.1(10)*"a"* through *"e"*; and

3. The individual submits a legible copy of the certification to the agency prior to entry into Iowa.

(2) Enforcement actions with the agency, another agreement state, or the U.S. Nuclear Regulatory Commission or any sanctions by an independent certifying entity may be considered when reviewing a request for reciprocal recognition from a licensee, registrant, or certified radiographer.

(3) Certified radiographers who are granted reciprocity by the agency shall maintain the certification upon which the reciprocal recognition was granted, or prior to the expiration of such certification, shall meet the requirements of 45.1(10)*"b."*

45.1(11) *Internal audits.* Except as provided in 45.1(11)*"c,"* the RSO or designee shall conduct an inspection program of the job performance of each radiographer and radiographer's assistant to ensure that these rules, license requirements, and the licensee's or registrant's operating and emergency procedures are followed. The inspection program must:

a. Include observation of the performance of each radiographer and radiographer's assistant during an actual industrial radiographic operation, at intervals not to exceed six months; and

b. Provide that, if a radiographer or radiographer's assistant has not participated in an industrial radiographic operation for more than six months since the last audit, the radiographer or radiographer's assistant must demonstrate understanding of the subjects contained in Appendix A of this chapter by a practical examination before the individual can next participate in a radiographic operation.

c. The agency may consider alternatives in those situations where the individual serves as both radiographer and RSO. In those operations where a single individual serves as both radiographer and RSO, and performs all radiography operations, an inspection program is not required.

d. Records of audits shall be maintained by the licensee or registrant for agency inspection for three years from the date of the audit.

45.1(12) *Personnel monitoring control.*

a. The personnel monitoring program shall meet the applicable requirements of 641—Chapter 40.

b. When performing industrial radiographic operations:

(1) No licensee or registrant shall permit an individual to act as a radiographer, radiographer's assistant, or radiographer trainer unless at all times during radiographic operations each individual wears, on the trunk of the body, a combination of direct-reading pocket dosimeter, an operating alarm ratemeter, and a film badge, an optically stimulated luminescent device (OSL device) or a thermoluminescent dosimeter (TLD) that is processed and evaluated by an accredited National Voluntary Laboratory Accreditation Program (NVLAP). For permanent radiographic installations where other appropriate alarming or warning devices are in routine use, the wearing of an alarm ratemeter is not required.

(2) Pocket dosimeters or electronic personal dosimeters shall meet the criteria in ANSI N322-1977 and shall have a range of zero to at least 200 millirems. Electronic personal dosimeters may only be used in place of ion-chamber pocket dosimeters.

(3) Pocket dosimeters or electronic personal dosimeters shall be recharged at the start of each work shift.

(4) Pocket dosimeters or electronic personal dosimeters shall be read and exposures recorded at the beginning and at the end of each work shift, and before each recharging.

(5) If an individual's pocket dosimeter is discharged beyond its range (i.e., goes "off scale"), or if the electronic personal dosimeter reads greater than 200 millirem (2 millisievert), and the possibility of radiation exposure cannot be ruled out as the cause, industrial radiographic operations by that individual shall cease and the individual's film badge, OSL device, or TLD shall be within 24 hours sent for processing. The individual shall not return to work with sources of radiation until a determination of the radiation exposure has been made. This determination must be made by the RSO or the RSO's designee. The results of this determination must be included in the exposure records maintained in accordance with 641—Chapter 40.

(6) Each individual monitoring device shall be assigned to and worn by only one individual.

(7) Film badges, OSL devices and TLDs must be replaced at least monthly.

(8) If an individual monitoring device is lost or damaged, the worker shall cease work immediately until a replacement individual monitoring device is provided and the exposure is calculated for the time period from issuance to loss or damage of the individual monitoring device. The results of the calculated

exposure and the time period for which the individual monitoring device was lost or damaged must be included in the records maintained in 45.1(12)*"c."*

c. Records of pocket dosimeter readings of personnel exposures and yearly operability checks required in 45.1(12)*"d"* shall be maintained for three years by the licensee or registrant for agency inspection. If the dosimeter readings were used to determine external radiation dose (i.e., no TLD or film badge exposure records exist), the records shall be maintained for three years after they are recorded. Records of estimates of exposures as a result of off-scale personal direct reading dosimeters, or lost or damaged film badges, OSLs, or TLDs, shall be maintained until the agency terminates the license.

d. Pocket dosimeters shall be checked for correct response to radiation at periods not to exceed one year. Acceptable dosimeters shall read within plus or minus 20 percent of the true radiation exposure. Records of this check shall be maintained for inspection by the agency for three years from the date of the event.

e. Reports received from the film badge, OSL device or TLD processor shall be kept for inspection by the agency until the agency terminates the license.

f. Each alarm ratemeter must:

(1) Be checked to ensure that the alarm functions properly (sounds) prior to use at the start of each shift. Records of alarm function checks shall be maintained for two years by the licensee or registrant for agency inspection;

(2) Be set to give an alarm signal at a preset dose rate of 500 mR/hr;

(3) Require special means to change the preset alarm function; and

(4) Be calibrated at periods not to exceed one year for correct response to radiation: Acceptable ratemeters must alarm within plus or minus 20 percent of the true radiation dose rate. Records of the alarming ratemeter calibrations shall be maintained for three years by the licensee or registrant for agency inspection.

45.1(13) *Supervision of radiographer's assistant.* Whenever a radiographer's assistant uses radiographic exposure devices, sealed sources or associated equipment or conducts radiation surveys required by 45.2(5) or 45.3(7) to determine that the sealed source has returned to the shielded position after an exposure, the radiographer's assistant shall be under the direct supervision of a radiographer instructor. The direct supervision must include:

a. The radiographer's physical presence at the site where the source(s) of radiation is being used;

b. The availability of the radiographer to give immediate assistance if required; and

c. The radiographer's direct observation of the radiographer's assistant's performance of the operations referred to in this subrule.

45.1(14) *Access control.*

a. During each industrial radiographic operation, a radiographer or radiographer's assistant shall maintain continuous, direct visual surveillance of the operation to protect against unauthorized entry into a restricted area, radiation area or high radiation area, except at permanent radiographic installations where all entryways are locked to protect against unauthorized or accidental entry and the requirements of 45.1(9) are met.

b. Radiographic exposure devices shall not be left unattended except when in storage or physically secured against unauthorized removal.

45.1(15) *Posting.*

a. Notwithstanding any provisions in 641—subrule 40.62(1) areas in which radiography is being performed shall be conspicuously posted as required by 641—subrules 40.61(1) and 40.61(2).

b. Whenever practicable, ropes or barriers shall be used in addition to appropriate signs to designate areas in accordance with 641—subrule 40.26(1) and to help prevent unauthorized entry.

c. During pipeline industrial radiography operations, sufficient radiation signs and other barriers shall be posted to prevent unmonitored individuals from entering the radiation area.

d. Notwithstanding the requirements of 45.1(15)*"a,"* a restricted area may be established in accordance with 641—subrule 40.26(1) and may be posted in accordance with 40.61(1) and 40.61(2), i.e., both signs may be posted at the same location at the boundary of the restricted area.

45.1(16) *Temporary job site requirements.*

a. Documents and records. Each licensee or registrant conducting industrial radiography at a temporary job site shall have the following records available at that site for inspection by the agency:

(1) Appropriate license or certificate of registration or equivalent document;

(2) The appropriate operating and emergency procedures;

(3) The applicable agency rules;

(4) Survey records required pursuant to 45.2(5)*"d"* and 45.3(7)*"j"* for the period of operation at the site;

(5) Daily pocket dosimeter records for the period of operation at the site;

(6) The daily alarming ratemeter records for the period of operation at the site; and

(7) The latest radiation survey instrument calibration and leak test records for specific devices and sealed sources in use at the site. Acceptable records include tags or labels which are affixed to the device or survey meter and decay charts for sources which have been manufactured within the last six months.

b. Reserved.

45.1(17) *Specific requirements for radiographic personnel performing industrial radiography.*

a. At a job site, the following shall be supplied by the licensee or registrant:

(1) At least one operable, calibrated radiation survey instrument;

(2) A current whole body personnel monitor (TLD, OSL device or film badge) for each individual;

(3) An operable, calibrated pocket dosimeter with a range of 0 to 200 milliroentgens (5.16×10^{-5} C/kg) for each worker; and

(4) An operable, calibrated alarm ratemeter for each worker; and

(5) The appropriate barrier ropes and signs.

b. Each radiographer at a job site shall possess a valid I.D. card.

c. Each radiographer's assistant at a job site shall possess a valid trainee status card issued by the agency.

d. Industrial radiographic operations shall not be performed if any of the items in 45.1(17)*"a," "b,"* and *"c"* are not available at the job site or are inoperable.

e. No individual other than a radiographer or a radiographer's assistant who is under the direct supervision of a radiographer trainer shall manipulate controls or operate equipment used in industrial radiographic operations.

f. During an inspection by the agency, the agency inspector may terminate an operation if any of the items in 45.1(17)*"a"* are not available and operable or if the required number of radiographic personnel are not present. Operations shall not be resumed until such conditions are met.

45.1(18) *Notification of incidents.*

a. The agency shall be notified of thefts or losses of sources of radiation, overexposures, and excessive levels in accordance with 641—40.95(136C) and 40.97(136C).

b. Each licensee or registrant shall submit a written report within 30 days to the agency whenever one of the following events occurs:

(1) The source assembly cannot be returned to the fully shielded position and properly secured;

(2) The source assembly becomes disconnected from the drive cable;

(3) The failure of any component (critical to safe operation of the radiographic exposure device) to properly perform its intended function; or

(4) An indicator on a radiation-producing machine fails to show that radiation is being produced or an exposure switch fails to terminate production of radiation when turned to the off position.

c. The licensee or registrant shall include the following information in each report submitted in accordance with 45.1(18)*"b"*:

(1) A description of the equipment problem;

(2) Cause of each incident, if known;

(3) Manufacturer and model number of equipment involved in the incident;

(4) Location, time, and date of the incident;

(5) Actions taken to establish normal operations;

(6) Corrective actions taken or planned to prevent recurrence; and

(7) Names of personnel involved in the incident.

45.1(19) *Copies of operating and emergency procedures.* Each licensee or registrant shall maintain a copy of current operating and emergency procedures until the agency terminates the license. Superseded material must be retained for three years after the change is made.

[**ARC 8982B**, IAB 8/11/10, effective 9/15/10; **ARC 1639C**, IAB 10/1/14, effective 11/5/14]

641—45.2(136C) Radiation safety requirements for the use of radiation machines in industrial radiography.

45.2(1) *Locking of sources of radiation.* The control panel of each radiation machine shall be equipped with a locking device that will prevent the unauthorized use of an X-ray system or the accidental production of radiation. The radiation machine shall be kept locked and the key removed at all times except when under the direct visual surveillance of a radiographer.

45.2(2) *Permanent storage precautions.* Radiation machines shall be secured while in storage to prevent tampering or removal by unauthorized individuals.

45.2(3) *Requirements for radiation machines used in industrial radiographic operations.*

a. Equipment used in industrial radiographic operations involving radiation machines manufactured after January 1, 1992, shall be certified at the time of manufacture to meet the criteria set forth by ANSI N537-1976.

b. The registrant's name and city or town where the main business office is located shall be prominently displayed with a durable, clearly visible label(s) on all vehicles used to transport radiation machines for temporary job site use.

45.2(4) *Operating and emergency procedures.*

a. The registrant's operating and emergency procedures shall include instructions in at least the following:

(1) Operation and safety instruction on the radiation machine(s) to be used;

(2) Methods and occasions for conducting radiation surveys;

(3) Methods for controlling access to radiographic areas;

(4) Methods and occasions for locking and securing sources of radiation;

(5) Personnel monitoring and the use of personnel monitoring equipment, including steps that must be taken immediately by radiography personnel in the event a pocket dosimeter is found to be off-scale;

(6) Minimizing exposure of individuals in the event of an accident;

(7) The procedure for notifying proper personnel in the event of an accident;

(8) Maintenance of records; and

(9) Inspection and maintenance of radiation machines.

b. Each registrant shall provide, as a minimum, two radiographic personnel when radiation machines are used for any industrial radiography conducted other than at a permanent radiographic installation (shielded room, bay, or bunker). If one of the personnel is a radiographer's assistant, the other shall be a radiographer trainer authorized by the certificate of registration.

c. No individual other than a radiographer or a radiographer's assistant who is under the direct supervision of a radiographer trainer shall manipulate controls or operate equipment used in industrial radiographic operations.

d. Rescinded IAB 4/8/98, effective 7/1/98.

45.2(5) *Radiation surveys and survey records.*

a. No radiographic operation shall be conducted unless calibrated and operable radiation survey instrumentation, as described in 45.1(5), is available and used at each site where radiographic exposures are made.

b. A physical radiation survey shall be made after each radiographic exposure using radiation machines to determine that the machine is "off."

c. All potential radiation areas where industrial radiographic operations are to be performed shall be posted in accordance with 45.1(15), based on calculated dose rates, before industrial radiographic operations begin. An area survey shall be performed during the first radiographic exposure to confirm

that 45.1(15) requirements have been met and that unrestricted areas do not have radiation levels in excess of the limits specified in 641—subrule 40.26(1).

d. Records shall be kept of the surveys required by 45.2(5)*"b"* and *"c."* Such records shall be maintained for inspection by the agency for two years after completion of the survey. If the survey was used to determine an individual's exposure, however, the records of the survey shall be maintained until the agency authorizes their disposition.

45.2(6) *Special requirements and exemptions for enclosed radiography.*

a. Systems for enclosed radiography, including shielded-room radiography and cabinet radiography, designed to allow admittance of individuals shall:

(1) Comply with all applicable requirements of this chapter and 641—subrule 40.26(1). If such a system is a certified cabinet X-ray system, it shall comply with all applicable requirements of this chapter and 21 CFR 1020.40.

(2) Be evaluated at intervals not to exceed one year to ensure compliance with the applicable requirements as specified in 641—subrule 40.26(1). Records of these evaluations shall be maintained for inspection by the agency for a period of three years after the evaluation.

b. Certified and certifiable cabinet X-ray systems are exempt from the requirements of this chapter except that:

(1) Operating personnel must be provided with individual monitoring devices in accordance with the appropriate provisions of 641—40.37(136C).

(2) No registrant shall permit any individual to operate a cabinet X-ray system until such individual has received a copy of and instruction in the operating procedures for the unit and has demonstrated competence in its use. Records which demonstrate compliance with this subparagraph shall be maintained for inspection by the agency until disposition is authorized by the agency.

(3) Tests for proper operation of interlocks used to control entry to the high radiation area or alarm systems, where applicable, shall be conducted and recorded every three months. Records of these tests shall be maintained for agency inspection until disposal is authorized by the agency.

(4) The registrant shall perform an evaluation, at intervals not to exceed one year, to determine conformance with 641—subrule 40.26(1). If such a system is a certified cabinet X-ray system, it shall be evaluated at intervals not to exceed one year to determine conformance with 21 CFR 1020.40. Records of these evaluations shall be maintained for inspection by the agency for a period of two years after the evaluation.

c. Certified cabinet X-ray systems shall be maintained in compliance with 21 CFR 1020.40 unless prior approval has been granted by the agency pursuant to 641—38.3(136C).

45.2(7) *Registration for industrial radiographic operations.*

a. Radiation machines used in industrial radiographic operations shall be registered in accordance with 641—Chapter 39.

b. In addition to the registration requirements in 641—Chapter 39, an application for a certificate of registration shall include the following information:

(1) A schedule or description of the program for training radiographic personnel which specifies:

1. Initial training,
2. Periodic training,
3. On-the-job training, and
4. Methods to be used by the registrant to determine the knowledge, understanding, and ability of radiographic personnel to comply with agency rules, registration requirements, and the operating and emergency procedures of the applicant.

(2) Written operating and emergency procedures, including all items listed in Appendix D.

(3) A description of the internal inspection system or other management control to ensure that radiographic personnel follow registration provisions, rules of the agency, and the applicant's operating and emergency procedures.

(4) A list of permanent radiographic installations and descriptions of permanent storage and use locations.

(5) A description of the organization of the industrial radiographic program, including delegations of authority and responsibility for operation of the radiation safety program.

c. A certificate of registration will be issued if the requirements of 641—Chapter 39 and this subrule are met.

641—45.3(136C) Radiation safety requirements for use of sealed sources of radiation in industrial radiography.

45.3(1) *Limits on external radiation levels from storage containers and source changers.* The maximum exposure rate limits for storage containers and source changers are 200 millirem (2 millisieverts) per hour at any exterior surface, and 10 millirem (0.1 millisievert) per hour at 1 meter from any exterior surface with the sealed source in the shielded position.

45.3(2) *Locking of sources of radiation.*

a. Each source of radiation shall be provided with a lock or lockable outer container designed to prevent unauthorized or accidental removal of the sealed source. Either the exposure device or its container must be kept locked and, if applicable, the key removed, at all times when not under the direct surveillance of a radiographer or a radiographer's assistant except at permanent radiographic installations as stated in 45.1(14). Each sealed source storage container and source changer must have a lock or outer locked container designed to prevent unauthorized or accidental removal of the sealed source from its shielded position. Storage containers and source changers must be kept locked (and if the lock is a keyed lock, with the key removed at all times) when containing sealed sources except when the container is under the direct surveillance of a radiographer or radiographer's assistant.

b. Radiographic exposure devices, source changers, and storage containers, prior to being moved from one location to another and also prior to being secured at a given location, shall be locked and surveyed to ensure that the sealed source is in the shielded position.

c. The sealed source shall be secured in its shielded position by locking the exposure device or securing the remote control each time the sealed source is returned to its shielded position. Then a survey shall be performed to determine that the sealed source is in the shielded position pursuant to 45.3(7)*"b."*

45.3(3) *Storage precautions.*

a. Labeling, storage, and transportation.

(1) The licensee may not use a source changer or a container to store licensed material unless the source changer or the storage container has securely attached to it a durable, legible, and clearly visible label bearing the standard trefoil radiation caution symbol in conventional colors, i.e., magenta, purple or block on a yellow background, having a minimum diameter of 25 mm, and the wording: "CAUTION RADIOACTIVE MATERIAL, NOTIFY CIVIL AUTHORITIES (or name of company)," or "DANGER."

(2) The licensee may not transport licensed material unless the material is packaged, and the package is labeled, marked, and accompanied with appropriate shipping papers in accordance with 641—39.5(136C).

(3) Locked radiographic exposure devices and storage containers must be physically secured to prevent tampering or removal by unauthorized personnel. The licensee shall store licensed material in a manner which will minimize danger from explosion or fire.

(4) The licensee shall lock and physically secure the transport package containing licensed material in the transporting vehicle to prevent accidental loss, tampering, or unauthorized removal of the licensed material from the vehicle.

b. Radiographic exposure devices, source changers, or storage containers that contain radioactive material shall not be stored in residential locations. This requirement does not apply to storage of radioactive material in a vehicle in transit for use at temporary job sites, if the licensee complies with 45.3(3)*"c,"* and if the vehicle does not constitute a permanent storage location as described in 45.1(9).

c. If a vehicle is to be used for storage of radioactive material, a vehicle survey shall be performed after securing radioactive material in the vehicle and before transport to ensure that radiation levels do not exceed the limits specified in 641—subrule 40.26(1) at the exterior surface of the vehicle.

d. A storage or use location is permanent if radioactive material is stored at the location for more than 90 days and any one or more of the following applies to the location:

(1) Telephone service is established by the licensee;

(2) Industrial radiographic services are advertised for or from the location;

(3) Industrial radiographic operations are conducted at other sites due to arrangements made from the location.

45.3(4) *Performance requirements for radiography equipment.* Equipment used in industrial radiographic operations must meet the following minimum criteria:

a. Each radiographic exposure device, source assembly or sealed source, and all associated equipment must meet the requirements specified in American National Standard N432-1980, "Radiological Safety for the Design and Construction of Apparatus for Gamma Radiography" (published as NBS Handbook 136, issued January 1981). This publication has been approved for incorporation by reference by the Director of the Federal Register in accordance with 5 U.S.C. 552(a) and 1 CFR Part 51. This publication may be purchased from the American National Standards Institute, Inc., 25 West 43rd Street, New York, New York 10036, telephone (212)642-4900.

b. In addition to the requirements specified in paragraph *"a"* of this subrule, the following requirements apply to radiographic exposure devices, source changers, source assemblies, sealed sources, and associated equipment.

(1) Each radiographic exposure device must have attached to it by the user a durable, legible, clearly visible label bearing the:

1. Chemical symbol and mass number of the radionuclide in the device;
2. Activity and the date on which this activity was last measured;
3. Model number (or product code) and serial number of the sealed source;
4. Manufacturer's identity of the sealed source; and
5. Licensee's name, address, and telephone number.

(2) Radiographic exposure devices intended for use as Type B transport containers must meet the applicable requirements of 641—39.5(136C).

(3) Modification of any radiographic exposure devices, source changers, and source assemblies and associated equipment is prohibited, unless the design of any replacement component, including source holder, source assembly, controls or guide tubes would not compromise the design safety features of the system.

c. In addition to the requirements specified in paragraphs *"a"* and *"b"* of this subrule, the following requirements apply to radiographic exposure devices, source assemblies, and associated equipment that allow the source to be moved out of the device for radiographic operation or source changing:

(1) The coupling between the source assembly and the control cable must be designed in such a manner that the source assembly will not become disconnected if cranked outside the guide tube. The coupling must be such that it cannot be unintentionally disconnected under normal and reasonably foreseeable abnormal conditions;

(2) The device must automatically secure the source assembly when it is cranked back into the fully shielded position within the device. This securing system may only be released by means of a deliberate operation on the exposure device;

(3) The outlet fittings, lock box, and drive cable fittings on each radiographic exposure device must be equipped with safety plugs or covers which must be installed during storage and transportation to protect the source assembly from water, mud, sand, or other foreign matter;

(4) Each sealed source or source assembly must have attached to it or engraved in it, a durable, legible, visible label with the words: "DANGER—RADIOACTIVE." The label must not interfere with safe operation of the exposure device or associated equipment;

(5) The guide tube must be able to withstand a crushing test that closely approximates the crushing forces that are likely to be encountered during use, and be able to withstand a kinking resistance test that closely approximates the kinking forces that are likely to be encountered during use;

(6) Guide tubes must be used when moving the source out of the device;

(7) An exposure head or similar device designed to prevent the source assembly from passing out of the end of the guide tube must be attached to the outermost end of the guide tube during radiographic operations;

(8) The guide tube exposure head connection must be able to withstand the tensile test for control units specified in ANSI N432-1980;

(9) Source changers must provide a system for ensuring that the source will not be accidentally withdrawn from the changer when connecting or disconnecting the drive cable to or from a source assembly.

d. All newly manufactured radiographic exposure devices and associated equipment acquired by licensees after January 10, 1992, must comply with the requirements of this subrule.

e. All radiographic exposure devices and associated equipment in use after January 10, 1996, must comply with the requirements of this subrule.

f. Notwithstanding the requirements of 45.3(4)*"a,"* equipment used in industrial radiographic operations need not comply with § 8.9.2(c) of the Endurance Test in American National Standards Institute N432-1980, if the prototype equipment has been tested using a torque value representative of the torque that an individual using the radiography equipment can realistically exert on the lever or crankshaft of the drive mechanism.

g. Engineering analysis may be submitted by an applicant or licensee to demonstrate the applicability of previously performed testing on similar individual radiography equipment components. Upon review, the agency may find this an acceptable alternative to actual testing of the component pursuant to the above-referenced standard.

45.3(5) *Leak testing, repair, tagging, opening, modification, and replacement of sealed sources.*

a. The replacement of any sealed source fastened to or contained in a radiographic exposure device and leak testing, repair, tagging, opening, or any other modification of any sealed source shall be performed only by persons specifically authorized to do so by the agency, the U.S. Nuclear Regulatory Commission, or an agreement state.

b. Leak testing requirements.

(1) Each licensee that uses a sealed source shall have the source tested for leakage at intervals not to exceed 6 months. The leak testing of the source must be performed using a method approved by this agency. The wipe sample should be taken from the nearest accessible point to the sealed source where contamination might accumulate. The wipe sample must be analyzed for radioactive contamination. The analysis must be capable of detecting the presence of 0.005 microcuries (185 Bq) of radioactive material on the test sample and must be performed by a person specifically authorized by this agency to perform the analysis.

(2) The licensee shall maintain records of the leak tests results for sealed sources and devices containing depleted uranium (DU). The results must be stated in units of microcuries (becquerels). The licensee shall retain each record for three years after it is made or until the source in storage is removed.

(3) Unless a sealed source is accompanied by a certificate from the transferor that shows that it has been leak tested within 6 months before the transfer, it may not be used by the licensee until tested for leakage. Sealed sources that are in storage and not in use do not require leak testing, but must be tested before use or transfer to another person if the interval of storage exceeds 6 months.

c. Any test conducted under this subrule which reveals the presence of 0.005 microcuries (185 Bq) or more of removable radioactive material must be considered evidence that the sealed source is leaking. The licensee shall immediately withdraw from use the equipment involved and shall have it decontaminated and repaired or disposed of in accordance with agency rules. Within five days after obtaining the results of the test, the licensee shall file a report with the agency describing the equipment involved, the test results, and the corrective action taken.

d. Each exposure device using DU shielding and an "S" tube configuration must be tested for DU contamination at intervals not to exceed 12 months. The analysis must be capable of detecting the presence of 0.005 microcuries (185 Bq) of radioactive material on the test sample and must be performed by a person specifically authorized by the agency to perform the analysis. Should such testing reveal the presence of 0.005 microcuries (185 Bq) or more of removable DU contamination, the exposure

device must be removed from use until an evaluation of the wear on the S-tube has been made. Should the evaluation reveal that the S-tube is worn through, the device may not be used again. DU-shielded devices do not have to be tested for DU contamination while in storage and not in use. Before using or transferring such a device, however, the device must be tested for DU contamination if the interval of storage exceeds 12 months.

e. Each radiographic exposure device shall have permanently attached to it a durable label which has, as a minimum, the instruction: "Danger—Radioactive Material—Do Not Handle—Notify Civil Authorities if Found."

45.3(6) *Operating and emergency procedures.*

a. The licensee's operating and emergency procedures shall include instructions in at least the following:

(1) Handling and use of sources of radiation to be employed such that no individual is likely to be exposed to radiation doses in excess of the limits established in 641—Chapter 40;

(2) Methods and occasions for conducting radiation surveys;

(3) Methods for controlling access to radiographic areas;

(4) Methods and occasions for locking and securing sources of radiation;

(5) Personnel monitoring and the use of personnel monitoring equipment, including steps that must be taken immediately by radiography personnel in the event a pocket dosimeter is found to be off-scale;

(6) Transportation to field locations, including packing of sources of radiation in the vehicles, posting of vehicles, and control of sources of radiation during transportation;

(7) Minimizing exposure of individuals in the event of an accident;

(8) The procedure for notifying proper personnel in the event of an accident;

(9) Maintenance of records;

(10) The inspection and maintenance of radiographic exposure devices, source changers, storage containers, and radiation machines;

(11) The procedure(s) for identifying and reporting defects and noncompliance in 10 CFR Part 21; and

(12) Source recovery procedure if the licensee will perform source recovery.

b. Rescinded IAB 4/8/98, effective 7/1/98.

c. Whenever radiography is performed at a location other than a permanent radiographic installation, the radiographer must be accompanied by at least one other qualified radiographer or a radiographer's assistant. If one of the personnel is a radiographer's assistant, the other shall be a radiographer trainer authorized by the license. The additional qualified individual shall observe the operations and be capable of providing immediate assistance to prevent unauthorized entry. Radiography shall not be performed if only one qualified individual is present.

d. Collimators shall be used in industrial radiographic operations which use crank-out devices except when physically impossible.

e. All radiographic operations conducted at locations of use authorized on the license must be conducted in a permanent radiographic installation, unless specifically authorized by the agency.

45.3(7) *Radiation surveys and survey records.*

a. No radiographic operation shall be conducted unless calibrated and operable radiation survey instrumentation, as described in 45.1(5), is available and for each exposure device used at each site where radiographic exposures are made.

b. A survey with a calibrated and operable radiation survey instrument shall be made after each radiographic exposure to determine that the sealed source has been returned to its shielded position. The entire circumference of the radiographic exposure device shall be surveyed. If the radiographic exposure device has a source guide tube, the survey shall also include the entire length of the guide tube and collimator. The survey required by this subrule must be done before exchanging films, repositioning the exposure head or dismantling the equipment.

c. (1) All potential radiation areas where industrial radiographic operations are to be performed shall be posted in accordance with 641—40.61(136C), based on calculated dose rates, before industrial radiographic operations begin. An area survey shall be performed during the first radiographic exposure

(i.e., with the sealed source in the exposed position) to confirm that 641—40.61(136C) requirements have been met and that unrestricted areas do not have radiation levels in excess of the limits specified in 641—subrule 40.26(1).

(2) Each time the exposure device is relocated or the exposed position of the sealed source is changed, the requirements of 45.3(7)*"c"*(1) shall be met.

(3) The requirements of 45.3(7)*"c"*(2) do not apply to pipeline industrial radiographic operations when the conditions of exposure include, but are not limited to, the radiographic exposure device, duration of exposure, source strength, pipe size, and pipe thickness remain constant.

d. A lock-out survey, in which all accessible surfaces of the radiographic exposure device or source changer are surveyed, shall be made to determine that each sealed source is in its shielded position before securing the radiographic exposure device or source changer.

e. The sealed source shall be secured in its shielded position by locking the radiographic exposure device or source changer each time the sealed source is returned to its shielded position.

f. Each radiographic exposure device and source changer shall be locked and the key removed from any keyed lock prior to being moved or transported from one location to another and also prior to being stored at a given location.

g. If a vehicle is to be used for storage of radioactive material, a vehicle survey shall be performed after securing radioactive material in the vehicle and before transport to ensure that radiation levels do not exceed the limits specified in 641—subrule 40.26(1) at the exterior surface of the vehicle.

h. Surveys shall be performed on storage containers to ensure that radiation levels do not exceed the limits specified in 641—40.15(136C). These surveys shall be performed initially with the maximum amount of radioactive material present in the storage location and thereafter at the time of the quarterly inventory and whenever storage conditions change.

i. A survey meeting the requirements of 45.3(7)*"b"* shall be performed on the radiographic exposure device and the source changer after every sealed source exchange. A survey shall be made of the storage area as defined in 641—45.2(136C) whenever a radiographic exposure device is being placed in storage.

j. Records shall be kept of the surveys required by 45.3(7)*"c," "d," "g," "h,"* and *"i."* Such records shall be maintained for inspection by the agency for two years after completion of the survey. If the survey was used to determine an individual's exposure, however, the records of the survey shall be maintained until the agency authorizes their disposition.

45.3(8) *Requirements for enclosed radiography.*

a. Systems for enclosed radiography, including shielded-room radiography designed to allow admittance of individuals shall comply with all applicable requirements of this chapter.

b. Procedures shall be evaluated at intervals not to exceed one year to ensure compliance with the applicable requirements as specified in 641—subrule 40.26(1). Records of these evaluations shall be maintained for inspection by the agency for a period of two years after the evaluation.

c. Tests for proper operation of high radiation area control devices or alarm systems, where applicable, shall be conducted, recorded, and maintained in accordance with 45.1(9)*"b."*

45.3(9) *Underwater, offshore platform, and lay-barge radiography.*

a. Underwater, offshore platform, or lay-barge radiography shall not be performed unless specifically authorized in a license issued by the agency in accordance with 641—paragraph 39.4(27)*"e."*

b. In addition to the other rules of this chapter, the following rules apply to the performance of lay-barge or offshore platform radiography:

(1) Cobalt-60 sources with activities in excess of 20 curies (nominal) and iridium-192 sources with activities in excess of 100 curies (nominal) shall not be used in the performance of lay-barge or offshore platform industrial radiography.

(2) Collimators shall be used for all industrial radiographic operations performed on lay-barge or offshore platforms.

45.3(10) *Prohibitions.* Industrial radiography performed with a sealed source which is not fastened to or contained in a radiographic exposure device (fishpole technique) is prohibited unless specifically authorized in a license issued by the agency.

45.3(11) *Licensing for industrial radiographic operations.* Rescinded IAB 4/5/00, effective 5/10/00.

[**ARC 1639C**, IAB 10/1/14, effective 11/5/14]

641—45.4(136C) Radiation safety requirements for the use of particle accelerators for nonhuman use.

45.4(1) *Purpose and scope.*

a. This rule establishes procedures for the registration or licensing and the use of particle accelerators.

b. Unless specifically required otherwise by this rule, all registrants or licensees performing operations with a particle accelerator are subject to the requirements of 641—Chapters 38 to 40 and 641—45.1(136C).

c. The requirements of 45.1(10)*"b"*(2) and (3) and 45.1(10)*"d"*(1)"2" do not apply to nonradiographic uses.

45.4(2) *Definitions.* For purposes of this subrule, definitions in 641—Chapters 38 and 40 and subrule 45.1(2) may also apply. As used in this rule, the following definitions apply:

"Cold pasteurization" means the process of using radiation for destroying disease-causing microorganisms in commercial products.

"Self-shielded particle accelerator" means a particle accelerator with the accelerator installed in an enclosure independent of the existing architectural structures except the floor on which it may be placed. The enclosure must have been evaluated by a qualified expert and that evaluation approved by an appropriate regulatory authority through a device evaluation. The self-shielded accelerator is intended to contain at least that portion of material being irradiated, provide radiation attenuation, and exclude personnel from its interior during generation of radiation. A particle accelerator used within a shielded part of a building, or which may temporarily or occasionally incorporate portable shielding, is not a self-shielded particle accelerator.

"Shielded facility" means an accelerator facility where shielding is required to be constructed on site in order to assure compliance with the requirements of 641—Chapter 40, or where shielding supplied with the accelerator has been evaluated by qualified experts and that evaluation approved by an appropriate regulatory authority through a device evaluation.

45.4(3) *Registration or license requirements.* No person shall receive, possess, use, transfer, own, or acquire a particle accelerator except as authorized in a registration or license issued pursuant to 641—39.1(136C) to 39.4(136C) and the following requirements:

a. Accelerator facilities whose operations result in nuclear transformations that produce or are likely to produce radioactive material more than the exempt quantities and concentrations listed in Appendices A and B of 641—Chapter 39 shall be authorized by the issuance of a radioactive material license in accordance with 641—Chapter 39. Accelerator facilities that produce or are likely to produce radioactive material less than the exempt quantities and concentrations shall be authorized by registration.

b. For accelerator facilities required to be licensed in accordance with 45.4(3), those operations that would require personnel monitoring, pursuant to 641—40.37(136C), due to the presence of radioactive material, shall be performed only by a specific licensee. Such operations would normally include installation, testing and maintenance as well as routine operations.

45.4(4) *General requirements for the issuance of a registration or license for particle accelerators.* Along with the requirements of 641—39.1(136C) to 39.4(136C), an application for use of a particle accelerator will be approved only if the agency determines that:

a. The applicant is qualified by reason of training and experience to use the accelerator in question for the purpose requested in accordance with this rule and 641—Chapter 40 in such a manner as to minimize danger to public health and safety or property;

b. The applicant's proposed or existing equipment, facilities, and operating and emergency procedures are adequate to protect health and minimize danger to public health and safety or property;

c. The issuance of the registration or license will not be inimical to the health and safety of the public, and the applicant satisfies any applicable special requirement in 45.4(4);

d. The applicant has appointed a radiation safety officer responsible for the day-to-day operation of the radiation safety program;

e. The applicant and the applicant's staff have experience in the use of particle accelerators and training sufficient for application to its intended uses;

f. The applicant has an adequate training program for operators of particle accelerators.

45.4(5) *Personnel monitoring.* In addition to the requirements of 641—Chapter 40, personnel monitoring shall be provided to and used by all individuals entering any area for which interlocks are required unless a survey of the area has determined that radiation levels are below that of a high radiation area; and

a. Power to an accelerator cannot be activated; or

b. An accelerated beam cannot be directed to the area.

45.4(6) *Operations.*

a. No registrant shall permit any individual to act as an operator of a particle accelerator until such individual:

(1) Has been instructed in radiation safety and shall have demonstrated an understanding thereof;

(2) Has received copies of and instruction in this rule and the applicable requirements of 641—Chapter 40, pertinent registration and the registrant's operating and emergency procedures, and shall have demonstrated understanding thereof; and

(3) Has demonstrated competence to use the particle accelerator, related equipment, and survey instruments which will be employed.

b. The radiation safety officer or radiation safety committee, if applicable, shall have the authority to terminate the operations at a particle accelerator facility if such action is deemed necessary to minimize danger to public health and safety or property.

c. Along with the audit required in 641—subrule 40.10(3), each operator's performance during an actual accelerator operation shall be audited by the radiation safety officer or designee at intervals not to exceed six months. If an operator has not participated in an accelerator operation for more than six months since the last audit, the individual's performance shall be observed and recorded at the first opportunity the individual participates in an accelerator operation. Records of the audits shall be maintained by the registrant for the agency inspection for three years from the date of the audit.

d. Operators of particle accelerators used for industrial radiography shall meet the requirements of 45.1(10).

45.4(7) *Shielding and safety design requirements.*

a. A qualified expert acceptable to the agency shall be consulted in the design of a particle accelerator installation and called upon to perform a radiation survey when the accelerator is first capable of producing radiation.

b. Each particle accelerator installation shall be provided with such primary and secondary barriers as are necessary to ensure compliance with 641—40.15(136C) and 641—40.26(136C).

c. In addition to the requirements of 45.4(8)*"a"* and *"b,"* shielded facilities or self-shielded particle accelerators shall meet the following requirements:

(1) Authorization, by issuance of a construction permit, shall be granted upon a determination of adequacy being made pursuant to the review of an initial application of the shielding design, physical plant, and site specifications, and of the applicant's proposed equipment, uses and workloads. For a shielded facility, the applicant shall submit an evaluation of the shielding design by a qualified expert. For a self-shielded particle accelerator, the applicant need not submit an evaluation of a shielding design if an evaluation by an appropriate regulatory authority has been performed. The applicant may instead reference this evaluation. The applicant shall maintain a copy of the evaluation of shielding design for agency review.

(2) Authorization for installation and testing of an accelerator shall be given only after a determination of adequacy of testing protocols, testing safety procedures, staff training, and radiation detection instrumentation has been made; and

(3) Operational use of an accelerator shall be authorized only after determination of adequacy of the items listed in 45.4(4) has been made by the agency.

45.4(8) *Particle accelerator controls and interlock systems.*

a. Instrumentation, readouts, and controls on the particle accelerator control console shall be clearly identified, easily discernible and located outside the high radiation area.

b. Each entrance into a target area or other high radiation area shall be provided with two safety interlocks that shut down the machine when the barrier is breached.

c. Each safety interlock shall be on a circuit that allows it to operate independently of all other safety interlocks.

d. All safety interlocks shall be designed so that any defect or component failure in the safety interlock system prevents operation of the accelerator.

e. When a safety interlock system has been tripped, it shall only be possible to resume operation of the accelerator by manually resetting controls at the position where the safety interlock has been tripped and, lastly, at the main control console.

f. A scram button or other emergency power cutoff switch shall be located and easily identifiable in all high radiation areas. Such a cutoff switch shall include a manual reset so that the accelerator cannot be restarted from the accelerator control console without resetting the cutoff switch.

45.4(9) *Warning devices.*

a. Each location designated as a high radiation area, and each entrance to such location, shall be equipped with easily observable warning lights that operate when, and only when, radiation is being produced.

b. Each high radiation area shall have an audible warning device that shall be activated for 15 seconds prior to the possible creation of such high radiation area. Such warning device shall be clearly discernible in all high radiation areas.

c. Barriers, temporary or otherwise, and pathways leading to high radiation areas shall be posted in accordance with 641—40.61(136C).

45.4(10) *Operating and emergency procedures.*

a. Particle accelerators, when not in operation, shall be secured to prevent unauthorized use.

b. The safety interlock system shall not be used to turn off the accelerator beam except in an emergency.

c. All safety and warning devices, including interlocks, shall be checked for proper operation intervals not to exceed three months. Results of such tests shall be maintained at the accelerator facility for inspection by the agency for three years.

d. All incidents in which the interlock system fails to operate properly or where the operation is terminated by the interlock system shall be investigated and reported to the radiation safety officer or, if applicable, the radiation safety committee. Documentation shall be maintained for inspection by the agency for three years.

e. If, for any reason, it is necessary to intentionally bypass a safety interlock or interlocks, such action shall be:

(1) Authorized by the radiation safety officer and, if applicable, the radiation safety committee;

(2) Recorded in a permanent log and a notice posted at the accelerator control console; and

(3) Terminated as soon as possible.

f. The registrant's operating and emergency procedures shall include the following:

(1) Operation and safety instructions on the accelerator(s) to be used;

(2) Methods for controlling access to restricted areas;

(3) Methods and occasions for locking and securing sources of radiation;

(4) Use of personnel monitoring equipment;

(5) The procedure for notifying proper personnel in the event of an accident;

(6) Maintenance of records;

(7) Inspections and maintenance of the accelerator; and

(8) Steps to be taken in the case of an emergency.

g. A copy of the current operating and emergency procedures shall be maintained at the accelerator control panel.

45.4(11) *Radiation monitoring requirements.*

a. A radiation protection survey shall be performed and documented by a qualified expert, acceptable to the agency, when changes have been made in shielding, operation, equipment, or occupancy of adjacent areas.

b. Accelerator facilities shall survey with a radiation detection instrument at intervals not to exceed 12 months. Records of this survey shall be maintained for agency review for three years.

c. Accelerator facilities registered or licensed pursuant to 45.4(3)*"a"* shall survey for removable contamination at intervals not to exceed six months to determine the degree of contamination.

d. Each time removable shields on self-shielded particle accelerators are opened, a visual survey of the shielding must be performed to observe physical damage. In addition, when these shields are returned to the closed position, a physical radiation survey shall be conducted upon initial reactivating of the accelerator. Records of this survey shall be maintained for agency review for three years.

e. Accelerator facilities registered or licensed pursuant to 45.4(3)*"a"* shall perform a survey with a radiation detection instrument and surveys for removable contamination before maintenance or servicing of its particle accelerator(s) or associated equipment located in the high radiation area.

f. Radiation levels in all high radiation areas shall be continuously monitored. The monitoring devices shall be electrically independent of the accelerator control and safety interlock systems and capable of providing a readout at the control panel.

g. Upon installation, all area monitoring equipment shall be tested to assure proper operation under operating conditions of the particle accelerator. All area monitors shall be calibrated at intervals not to exceed one year and after each servicing and repair.

h. Whenever applicable, accelerator facilities registered or licensed pursuant to 45.4(3)*"a"* shall perform surveys at intervals not to exceed six months to determine the amount of airborne particulate radioactivity present.

i. All surveys shall be made in accordance with the written procedures established by the radiation safety officer or a qualified expert who is acceptable to the agency.

j. Records of all radiation protection surveys, calibrations, and instrumentation tests shall be maintained at the accelerator facility for inspection by the agency.

45.4(12) *Radiation safety officer.*

a. Each registrant shall appoint a radiation safety officer that meets the following requirements:

(1) Possesses a high school diploma or a certificate of high school equivalency based on the GED test;

(2) Documents two years of radiation protection experience.

b. The specific duties of the RSO include, but are not limited to, the following:

(1) To establish and oversee operating, emergency, and ALARA procedures and to review them regularly to ensure that the procedures are current and conform with these rules;

(2) To oversee and approve all phases of the training program for accelerator operators so that appropriate and effective radiation protection practices are taught;

(3) To ensure that required radiation surveys are performed and documented in accordance with these rules, including any corrective measures when levels of radiation exceed established limits;

(4) To ensure that personnel monitoring devices are calibrated and used properly by occupationally exposed personnel, that records are kept of the monitoring results, and that timely notifications are made as required by 641—Chapter 40;

(5) To ensure that any required interlock switches and warning signals are functioning and that radiation signs, ropes, and barriers are properly posted and positioned;

(6) To investigate and report to the agency each known or suspected case of radiation exposure to an individual or radiation level detected in excess of limits established by these rules and each theft or loss of source(s) of radiation, to determine the cause, and to take steps to prevent its recurrence;

(7) To have a thorough knowledge of management policies and administrative procedures of the licensee or registrant;

(8) To assume control and have the authority to institute corrective actions including shutdown of operations when necessary in emergency situations or unsafe conditions;

(9) To maintain records as required by these rules;

(10) To ensure the proper storing, labeling, and use of the accelerator;

(11) To ensure that inspection and maintenance programs are performed in accordance with 45.1(6), 45.1(8), 45.4(10)*"c"*; and

(12) To ensure that personnel are complying with these rules and the operating and emergency procedures of the registrant.

641—45.5(136C) Radiation safety requirements for analytical X-ray equipment.

45.5(1) *Purpose and scope.* This rule provides special requirements for analytical X-ray equipment. The requirements of this rule are in addition to, and not in substitution for, 641—Chapters 38, 39, and 40. The requirements of rules 641—45.1(136C) to 641—45.4(136C) do not apply.

45.5(2) *Definitions.* For the purpose of this subrule, definitions in 641—Chapter 38 may also apply. As used in this rule, the following definitions apply:

"Analytical X-ray equipment" means equipment used for X-ray diffraction or fluorescence analysis.

"Analytical X-ray system" means a group of components utilizing X-rays or gamma rays to determine the elemental composition or to examine the microstructure of materials.

"Fail-safe characteristics" means a design feature which causes beam port shutters to close, or otherwise prevents emergence of the primary beam, upon the failure of a safety or warning device.

"Local components" means part of an analytical X-ray system and includes X-ray areas that are struck by X-rays such as radiation source housings, port and shutter assemblies, collimators, sample holders, cameras, goniometers, detectors, and shielding, but does not include power supplies, transformers, amplifiers, readout devices, and control panels.

"Normal operating procedures" means step-by-step instructions necessary to accomplish the analysis. These procedures shall include sample insertion and manipulation, equipment alignment, routine maintenance by the registrant or licensee, and data recording procedures, which are related to radiation safety.

"Open-beam configuration" means an analytical X-ray system in which an individual could accidentally place some part of his body in the primary beam path during normal operation.

"Primary beam" means radiation which passes through an aperture of the source housing by a direct path from the X-ray tube or a radioactive source located in the radiation source housing.

45.5(3) *Equipment requirements.*

a. Safety device. A device which prevents the entry of any portion of an individual's body into the primary X-ray beam path or which causes the beam to be shut off upon entry into its path shall be provided on all open-beam configurations. A registrant or licensee may apply to the agency for an exemption from the requirement of a safety device. Such application shall include:

(1) A description of the various safety devices that have been evaluated;

(2) The reason each of these devices cannot be used; and

(3) A description of the alternative methods that will be employed to minimize the possibility of an accidental exposure, including procedures to ensure that operators and others in the area will be informed of the absence of safety devices.

b. Warning devices.

(1) Open-beam configurations shall be provided with a readily discernible indication of:

1. X-ray tube "on-off" status located near the radiation source housing, if the primary beam is controlled in this manner; or

2. Shutter "open-closed" status located near each port on the radiation source housing, if the primary beam is controlled in this manner.

(2) An easily visible warning light labeled with the words "X-RAY ON," or words having a similar intent, shall be located:

1. Near any switch that energizes an X-ray tube and shall be illuminated only when the tube is energized; or

2. In the case of a radioactive source, near any switch that opens a housing shutter and shall be illuminated only when the shutter is open.

(3) Warning devices shall be labeled so that their purpose is easily identified. On equipment installed after the effective date of these rules, warning devices shall have fail-safe characteristics.

c. Ports. Unused ports on radiation source housings shall be secured in the closed position in a manner which will prevent casual opening.

d. Labeling. All analytical X-ray equipment shall be labeled with a readily discernible sign or signs bearing the radiation symbol and the words:

(1) "CAUTION—HIGH INTENSITY X-RAY BEAM," or words having a similar intent, on the X-ray source housing; and

(2) "CAUTION—RADIATION—THIS EQUIPMENT PRODUCES RADIATION WHEN ENERGIZED," or words having a similar intent, near any switch that energizes an X-ray tube if the radiation source is an X-ray tube; or

(3) "CAUTION—RADIOACTIVE MATERIAL," or words having a similar intent, on the source housing in accordance with 641—40.63(136C) if the radiation source is a radionuclide.

e. Shutters. On open-beam configurations, each port on the radiation source housing shall be equipped with a shutter that cannot be opened unless a collimator or a coupling has been connected to the port.

f. Radiation source housing. Each radiation source housing shall be subject to the following requirements:

(1) Each X-ray tube housing shall be equipped with an interlock that shuts off the tube if it is removed from the radiation source housing or if the housing is disassembled.

(2) Each radioactive source housing or port cover or each X-ray tube housing shall be so constructed that, with all shutters closed, the radiation measured at a distance of 5 centimeters from its surface is not capable of producing a dose in excess of 2.5 millirems (0.025 mSv) in one hour. For systems utilizing X-ray tubes, this limit shall be met at any specified tube rating.

g. Generator cabinet. Each X-ray generator shall be supplied with a protective cabinet which limits leakage radiation measured at a distance of 5 centimeters from its surface such that it is not capable of producing a dose in excess of 0.25 millirem (2.5 mSv) in one hour.

45.5(4) *Area requirements.*

a. Radiation levels. The local components of an analytical X-ray system shall be located and arranged and shall include sufficient shielding or access control such that no radiation levels exist in any area surrounding the local component group which could result in a dose to an individual present therein in excess of the dose limits given in 641—40.26(136C). For systems utilizing X-ray tubes, these levels shall be met at any specified tube rating.

b. Surveys.

(1) Radiation surveys, as required by 641—40.36(136C), of all analytical X-ray systems sufficient to show compliance with 45.5(4)*"a"* shall be performed:

1. Upon installation of the equipment, and at least once every 12 months thereafter;

2. Following any change in the initial arrangement, number, or type of local components in the system;

3. Following any maintenance requiring the disassembly or removal of a local component in the system;

4. During the performance of maintenance and alignment procedures if the procedures require the presence of a primary X-ray beam when any local component in the system is disassembled or removed;

5. Anytime a visual inspection of the local components in the system reveals an abnormal condition; and

6. Whenever personnel monitoring devices show a significant increase over the previous monitoring period or the readings are approaching the limits specified in 641—40.15(136C).

(2) Radiation survey measurements shall not be required if a registrant or licensee can demonstrate compliance with 45.5(4)*"a"* to the satisfaction of the agency.

c. Posting. Each area or room containing analytical X-ray equipment shall be conspicuously posted with a sign or signs bearing the radiation symbol and the words "CAUTION—X-RAY EQUIPMENT" or words having a similar intent in accordance with 641—subrule 40.61(1).

45.5(5) *Operating requirements.*

a. Procedures. Normal operating procedures shall be written and available to all analytical X-ray equipment workers. No individual shall be permitted to operate analytical X-ray equipment in any manner other than that specified in the procedures unless such individual has obtained written approval of the radiation safety officer.

b. Bypassing. No individual shall bypass a safety device or interlock unless such individual has obtained the approval of the radiation safety officer. Such approval shall be for a specified period of time. When a safety device or interlock has been bypassed, a readily discernible sign bearing the words "SAFETY DEVICE NOT WORKING," or words having a similar intent, shall be placed on the radiation source housing.

c. Repair or modification of X-ray tube systems. Except as specified in 45.5(5)*"b,"* no operation involving removal of covers, shielding materials or tube housings or modifications to shutters, collimators, or beam stops shall be performed without ascertaining that the tube is off and will remain off until safe conditions have been restored. The main switch, rather than interlocks, shall be used for routine shutdown in preparation for repairs.

d. Radioactive source replacement, testing, or repair. Radioactive source housings shall be opened for source replacement, leak testing, or other maintenance or repair procedures only by individuals authorized to specifically conduct such procedures under a license issued by the U.S. Nuclear Regulatory Commission, an agreement state, or a licensing state.

45.5(6) *Personnel requirements.*

a. Instruction. No individual shall be permitted to operate or maintain analytical X-ray equipment unless such individual has received instruction in and demonstrated competence as to:

(1) Identification of radiation hazards associated with the use of the equipment;

(2) Significance of the various radiation warnings, safety devices, and interlocks incorporated into the equipment, or the reasons they have not been installed on certain pieces of equipment and the extra precautions required in such cases;

(3) Proper operating procedures for the equipment;

(4) Recognition of symptoms of an acute localized exposure; and

(5) Proper procedures for reporting an actual or suspected exposure.

b. Personnel monitoring.

(1) Finger or wrist dosimetry devices shall be provided to and shall be used by:

1. Analytical X-ray equipment workers using systems having an open-beam configuration and not equipped with a safety device; and

2. Personnel maintaining analytical X-ray equipment if the maintenance procedures require the presence of a primary X-ray beam when any local component in the analytical X-ray system is disassembled or removed.

(2) Reported dose values shall not be used for the purpose of determining compliance with 641—subrule 40.2(1) unless evaluated by a qualified expert.

641—45.6(136C) Radiation safety requirements for well-logging, wireline service operations and subsurface tracer studies.

45.6(1) *Purpose.* This rule establishes radiation safety requirements for using sources of radiation for wireline service operations including mineral-logging, radioactive markers, and subsurface tracer studies. The requirements of this rule are in addition to, and not in substitution for, the requirements of 641—Chapters 38, 39, and 40. The requirements of 641—45.1(136C) to 641—45.5(136C) do not apply.

45.6(2) S*cope.* This rule applies to all licensees or registrants who use sources of radiation for wireline service operations including mineral-logging, radioactive markers, or subsurface tracer studies.

45.6(3) *Definitions.* For the purpose of this subrule, the definitions of 641—Chapter 38 may also apply. As used in this rule, the following definitions apply:

"Energy compensation source (ECS)" means a small sealed source, with an activity not exceeding 3.7 MBq (100 microcuries), used within a logging tool, or other tool components, to provide a reference standard to maintain the tool's calibration when in use.

"Fresh water aquifer" means a geologic formation that is capable of yielding fresh water to a well or spring.

"Injection tool" means a device used for controlled subsurface injection of radioactive tracer material.

"Logging assistant" means any individual who, under the direct supervision of a logging supervisor, handles sealed sources or tracers that are not in logging tools or shipping containers or who performs surveys required by 45.6(22).

"Logging supervisor" means the individual who uses licensed material or provides direct supervision in the use of licensed material at a temporary job site and who is responsible to the licensee for ensuring compliance with the requirements of these rules and the conditions of the license.

"Logging tool" means a device used subsurface to perform well-logging.

"Personal supervision" means guidance and instruction by the logging supervisor who is physically present at the temporary job site, who is in personal contact with logging assistants, and who can give immediate assistance.

"Radioactive marker" means licensed material used for depth determination or direction orientation. For purposes of this rule, this term includes radioactive collar markers and radioactive iron nails.

"Safety review" means a periodic review on radiation safety aspects of well-logging provided by the licensee for its employees. The review may include, as appropriate, the results of internal inspections, new procedures or equipment, accidents or errors that have been observed, and opportunities for employees to ask safety questions.

"Source holder" means a housing or assembly into which a sealed source is placed to facilitate the handling and use of the source in well-logging operations.

"Subsurface tracer study" means the release of unsealed licensed material or a substance labeled with licensed material in a single well for the purpose of tracing the movement or position of the material or substance in the well or adjacent formation.

"Surface casing" for protecting fresh water aquifers means a pipe or tube used as a lining in a well to isolate fresh water aquifers from the well.

"Temporary job site" means a place where licensed materials are present for the purpose of performing well-logging or subsurface tracer studies.

"Tritium neutron generator target source" means a tritium source used within a neutron generator tube to produce neutrons for use in well-logging applications.

"Uranium sinker bar" means a weight containing depleted uranium used to pull a logging tool down toward the bottom of a well.

"Well" means a drilled hole in which well-logging may be performed. As used in this rule, "well" includes drilled holes for the purpose of oil, gas, mineral, groundwater, or geological exploration.

"Well-logging" means all operations involving the lowering and raising of measuring devices or tools which may contain licensed material or are used to detect licensed materials in wells for the purpose of obtaining information about the well or adjacent formations and which may be used in oil, gas, mineral, groundwater, or geological exploration.

"Wireline" means a cable containing one or more electrical conductors which is used to lower and raise logging tools in the well-bore.

"Wireline service operation" means any evaluation or mechanical service which is performed in the well-bore using devices on a wireline.

45.6(4) *Agreement with well owner or operator.*

a. A licensee may perform well-logging with a sealed source only after the licensee has a written agreement with the employing well owner or operator. This written agreement must identify who will meet the following requirements:

(1) If a sealed source becomes lodged in the well, a reasonable effort will be made to recover it;

(2) A person may not attempt to recover a sealed source in a manner which, in the licensee's opinion, could result in its rupture;

(3) The radiation monitoring required in 45.6(8) and 45.6(17) will be performed;

(4) If the environment, any equipment, or personnel are contaminated with licensed material, they must be decontaminated before release from the site or release for unrestricted use; and

(5) If the sealed source is classified as irretrievable after reasonable efforts at recovery have been expended, the following requirements must be implemented within 30 days:

1. Each irretrievable well-logging source must be immobilized and sealed in place with a cement plug;

2. There must be a means to prevent inadvertent intrusion on the source, unless the source is not accessible to any subsequent drilling operations; and

3. A permanent identification plaque, constructed of long-lasting material, such as stainless steel, brass, bronze, or Monel, must be mounted at the surface of the well, unless the mounting of the plaque is not practical. The size of the plaque must be at least 17 cm (7 inches) square and 3 mm (1/8-inch) thick. The plaque must contain:

- The word "Caution";
- The radiation symbol (the color requirement in 641—40.60(136C) need not be met);
- The date the source was abandoned;
- The name of the well owner or well operator, as appropriate;
- The well name and well identification number(s) or other designation;
- An identification of the sealed source(s) by radionuclide and quantity;
- The depth of the source and depth to the top of the plug; and
- An appropriate warning such as, "Do not reenter this well."

b. The licensee shall retain a copy of the written agreement for three years after the completion of the well-logging operation.

c. A licensee may apply, pursuant to 641—38.3(136C), for agency approval, on a case-by-case basis, of proposed procedures to abandon an irretrievable well-logging source in a manner not otherwise authorized in 45.6(26)*"a"*(5).

d. A written agreement between the licensee and the well owner or operator is not required if the licensee and the well owner or operator are part of the same corporate structure or otherwise similarly affiliated. However, the licensee shall still otherwise meet the requirements in 45.6(26)*"a"*(1) through (5).

45.6(5) *Limits on levels of radiation.* Sources of radiation shall be used, stored, and transported in such a manner that the transportation requirements of 641—39.5(136C) and the dose limitation requirements of 641—Chapter 40 are met.

45.6(6) *Storage precautions.*

a. Each source of radiation shall be provided with a storage or transport container. The container shall be provided with a lock, or tamper seal for calibration sources, to prevent unauthorized removal of, or exposure to, the source of radiation.

b. Sources of radiation shall be stored in a manner which will minimize danger from explosion or fire.

45.6(7) *Transport precautions.* Transport containers shall be physically secured to the transporting vehicle to prevent accidental loss, tampering, or unauthorized removal.

45.6(8) *Radiation survey instruments.*

a. The licensee or registrant shall maintain sufficient calibrated and operable radiation survey instruments at each field station to make physical radiation surveys as required by this subrule and by 641—40.36(136C). Instrumentation shall be capable of measuring 0.1 milliroentgen (25.8 nanocoulombs/kg) per hour through at least 50 milliroentgens (12.9 microcoulombs/kg) per hour.

b. Each radiation survey instrument shall be calibrated:

(1) At intervals not to exceed six months and after each instrument servicing;

(2) For linear scale instruments, at two points located approximately 1/3 and 2/3 of full-scale on each scale; for logarithmic scale instruments, at midrange of each decade, and at two points of at least one decade; and for digital instruments, at appropriate points; and

(3) So that accuracy within 20 percent of the true radiation level can be demonstrated on each scale.

c. Calibration records shall be maintained for a period of two years for inspection by the agency.

45.6(9) *Leak testing of sealed sources.*

a. *Testing and record-keeping requirements.* Each licensee using sealed sources of radioactive material shall have the sources tested for leakage periodically. Records of leak test results shall be kept in units of microcuries (Bq) and maintained for three years after the leak test is performed.

b. *Method of testing.* Tests for leakage shall be performed only by persons specifically authorized to perform such tests by the NRC, an agreement state, or a licensing state. The wipe of a sealed source must be performed using a leak test kit or method approved by the NRC, an agreement state, or a licensing state. The wipe sample must be taken from the nearest assessable point to the sealed source where contamination might accumulate. The test sample shall be analyzed for radioactive contamination, and the analysis shall be capable of detecting the presence of 0.005 microcurie (185 Bq) of radioactive material on the test sample.

c. *Interval of testing.*

(1) Each sealed source of radioactive material (except an energy compensation source (ECS)) shall be tested at intervals not to exceed six months. In the absence of a certificate from a transferor indicating that a test has been made six months prior to the transfer, the sealed source shall not be put into use until tested. If, for any reason, it is suspected that a sealed source may be leaking, it shall be removed from service immediately and tested for leakage as soon as practical.

(2) Each ECS that is not exempt from testing in accordance with 45.6(9)*"c"*(1) must be tested at intervals not to exceed three years. In the absence of a certificate from a transferor that a test has been made within the three years before the transfer, the ECS may not be used until tested.

d. *Leaking or contaminated sources.*

(1) If the test in 45.6(9)*"c"* reveals the presence of 0.005 microcurie (185 Bq) or more of removable radioactive material, the licensee shall immediately withdraw the source from use and shall cause it to be decontaminated, repaired, or disposed of by an NRC, agreement state, or licensing state licensee that is authorized to perform these functions. The licensee shall check the equipment associated with the leaking source for radioactive contamination and, if contaminated, have it decontaminated or disposed of by an NRC, agreement state, or licensing state licensee that is authorized to perform these functions.

(2) A report describing the equipment involved, the test results, any contamination which resulted from the leaking source, and the corrective action taken up to the time of the report shall be filed with the agency within five days of receiving the test results.

e. *Exemptions.* The following sources are exempted from the periodic leak test requirements of 45.6(9)*"a"* to *"d"*:

(1) Hydrogen-3 (tritium) sources;

(2) Sources of radioactive material with a half-life of 30 days or less;

(3) Sealed sources of radioactive material in gaseous form;

(4) Sources of beta- or gamma-emitting radioactive material with an activity of 100 microcuries (3.7 MBq) or less; and

(5) Sources of alpha- or neutron-emitting radioactive material with an activity of 10 microcuries (0.370 MBq) or less.

45.6(10) *Quarterly inventory.* Each licensee or registrant shall conduct a quarterly physical inventory to account for all sources of radiation. Records of inventories shall be maintained for two years from the date of the inventory for inspection by the agency and shall include the quantities and kinds of sources of radiation, the location where sources of radiation are assigned, the date of the inventory, and the name of the individual conducting the inventory.

45.6(11) *Utilization records.* Each licensee or registrant shall maintain current records, which shall be kept available for inspection by the agency for two years from the date of the recorded event, showing the following information for each source of radiation:

a. Make, model number, and a serial number or a description of each source of radiation used;

b. The identity of the well-logging supervisor or field unit to whom assigned;

c. Locations where used and dates of use; and

d. In the case of tracer materials and radioactive markers, the utilization record shall indicate the radionuclide and activity used in a particular well.

45.6(12) *Design, performance, and certification criteria for sealed sources used in well-logging operations.*

a. A licensee may use a sealed source for use in well-logging applications if:

(1) The sealed source is doubly encapsulated construction;

(2) The sealed source contains chemical and physical forms that are as insoluble and nondispersible as practical; and

(3) The sealed source meets the requirements of 45.6(12)*"b," "c,"* and *"d."*

b. For a sealed source manufactured on or before July 14, 1989, a licensee may use the sealed source for use in well-logging applications if it meets the requirements of USASI N5.10-1968, "Classification of Sealed Radioactive Sources," or the requirements in 45.6(12)*"c"* or *"d."*

c. For a sealed source manufactured after July 14, 1989, a licensee may use the sealed source for well-logging applications if it meets the oil-well-logging requirements of ANSI/HPS N43.6-1997, "Sealed Radioactive Sources—Classification."

d. For a sealed source manufactured after July 14, 1989, a licensee may use the sealed source for use in well-logging applications if the sealed source's prototype has been tested and found to maintain its integrity after each of the following tests.

(1) Temperature. The test source must be held at -40 degrees C for 20 minutes, 600 degrees C for one hour, and then be subject to a thermal shock test with a temperature drop from 600 degrees C within 15 seconds.

(2) Impact test. A 5 kg steel hammer, 2.5 cm in diameter, must be dropped from a height of 1 m onto the test source.

(3) Vibration test. The test source must be subject to a vibration from 25 Hz to 500 Hz at 5 g amplitude for 30 minutes.

(4) Puncture test. A one gram hammer and pin, 0.3 cm pin diameter, must be dropped from a height of 1 m onto the test source.

(5) Pressure test. The test source must be subject to an external pressure of 1.695×10^7 pascals (24,600 pounds per square inch absolute).

e. The requirements in 45.6(12)*"a," "b," "c,"* and *"d"* do not apply to sealed sources that contain licensed material in gaseous form.

f. The requirements of 45.6(12)*"a," "b," "c,"* and *"d"* do not apply to energy compensation sources (ECS). ECSs must be registered with the NRC, licensing state, or agreement state.

45.6(13) *Labeling.*

a. Each source, source holder, or logging tool containing radioactive material shall bear a durable, legible, and clearly visible marking or label, which has, as a minimum, the standard radiation caution symbol, without the conventional color requirement, and the following wording:

DANGER[1]
RADIOACTIVE

This labeling shall be on the smallest component transported as a separate piece of equipment.

b. Each transport container shall have permanently attached to it a durable, legible, and clearly visible label which has, as a minimum, the standard radiation caution symbol and the following wording:

DANGER[1]
RADIOACTIVE
NOTIFY CIVIL AUTHORITIES
[OR NAME OF COMPANY]

45.6(14) *Inspection and maintenance.*

a. Each licensee or registrant shall conduct, at intervals not to exceed six months, a program of inspection and maintenance of source holders, logging tools, source handling tools, storage containers,

transport containers, and injection tools to ensure proper labeling and physical condition. Records of inspection and maintenance shall be maintained for a period of two years for inspection by the agency.

b. If any inspection conducted pursuant to 45.6(14)*"a"* reveals damage to labeling or components critical to radiation safety, the device shall be removed from service until repairs have been made.

c. If a sealed source is stuck in the source holder, the licensee shall not perform any operation, such as drilling, cutting, or chiseling, on the source holder unless the licensee is specifically approved by the U.S. Nuclear Regulatory Commission, an agreement state, or a licensing state to perform this operation.

d. The repair, opening, or modification of any sealed source shall be performed only by persons specifically authorized to do so by the agency, the U.S. Nuclear Regulatory Commission, an agreement state, or a licensing state.

45.6(15) *Training requirements.*

a. No licensee or registrant shall permit any individual to act as a logging supervisor as defined in this rule until such individual has:

(1) Received, in a course recognized by the agency, the U.S. Nuclear Regulatory Commission, an agreement state, or a licensing state, instruction in the subjects outlined in Appendix E of this chapter and demonstrated an understanding thereof;

(2) Read and received instruction in the rules contained in this chapter and the applicable sections of 641—Chapters 38, 39, and 40 or their equivalent, conditions of appropriate license or certificate of registration, and the licensee's or registrant's operating and emergency procedures, and demonstrated an understanding thereof; and

(3) Demonstrated competence to use sources of radiation, related handling tools, and radiation survey instruments which will be used on the job.

b. No licensee or registrant shall permit any individual to assist in the handling of sources of radiation until such individual has:

(1) Read or received instruction in the licensee's or registrant's operating and emergency procedures and demonstrated an understanding thereof; and

(2) Demonstrated competence to use, under the direct supervision of the logging supervisor, the sources of radiation, related handling tools, and radiation survey instruments which will be used on the job.

c. The licensee or registrant shall maintain employee training records for inspection by the agency for two years following termination of the individual's employment.

45.6(16) *Operating and emergency procedures.* Each licensee or registrant shall develop and follow written operating and emergency procedures that cover:

a. The handling and use of sources of radiation, including the use of sealed sources in wells without surface casing for protecting fresh water aquifers, if appropriate;

[1]or CAUTION

b. The use of remote handling tools for handling sealed sources and radioactive tracer material except low-activity calibration sources;

c. Methods and occasions for conducting radiation surveys, including surveys for detecting contamination, as required by 45.6(22);

d. Minimizing personnel exposure, including exposures from inhalation and ingestion of licensed tracer materials;

e. Methods and occasions for locking and securing stored licensed or registered materials;

f. Personnel monitoring and the use of personnel monitoring equipment;

g. Transportation of licensed or registered materials to field stations or temporary job sites, packaging of licensed or registered materials for transport in vehicles, placarding of vehicles when needed, and physically securing licensed materials in transport vehicles during transportation to prevent accidental loss, tampering, or unauthorized removal;

h. Picking up, receiving, and opening packages containing licensed or registered materials, in accordance with 641—40.65(136C);

i. For the use of tracers, decontamination of the environment, equipment, and personnel;

j. Maintenance of records generated by well logging personnel at temporary job sites;

k. The inspection and maintenance of sealed sources, source holders, logging tools, injection tools, source handling tools, storage containers, transport containers, and uranium sinker bars as required by 45.6(14);

l. Identifying and reporting defects and noncompliance;

m. Actions to be taken if a sealed source is lodged in a well;

n. Notifying proper persons in the event of an accident; and

o. Actions to be taken if a sealed source is ruptured that include actions to prevent the spread of contamination and minimize inhalation and ingestion of licensed materials and actions to obtain suitable radiation survey instruments as required in 45.6(8).

45.6(17) *Personnel monitoring.*

a. No licensee or registrant shall permit any individual to act as a logging supervisor or to assist in the handling of sources of radiation unless each such individual wears, at all times during the handling of licensed radioactive materials, a film badge, OSL device or thermoluminescent dosimeter (TLD) that is processed and evaluated by an accredited National Voluntary Laboratory Accreditation Program (NVLAP). Each film badge, OSL device or TLD shall be assigned to and worn by only one individual. Film badges must be replaced at least monthly and OSL devices and TLDs replaced at least quarterly. After replacement, each film badge, OSL device or TLD must be promptly processed.

b. The licensee shall provide bioassay services to individuals using licensed materials in subsurface tracer studies if required by the license.

c. Personnel monitoring records and bioassay results shall be maintained for inspection until the agency authorizes disposition.

45.6(18) *Security.* During each logging or tracer application, the logging supervisor or other designated employee shall maintain direct surveillance of the operation to protect against unauthorized or unnecessary entry into a restricted area, as defined in 641—Chapter 38.

45.6(19) *Handling tools.* The licensee shall provide and require the use of tools that will ensure remote handling of sealed sources other than low activity calibration sources.

45.6(20) *Subsurface tracer studies.*

a. Protective gloves and other appropriate protective clothing and equipment shall be used by all personnel handling radioactive tracer material. Precautions shall be taken to avoid ingestion or inhalation of radioactive material.

b. No licensee shall cause the injection of radioactive material into potable aquifers without prior written authorization from the agency and any other appropriate state agency.

45.6(21) *Particle accelerators.* No licensee or registrant shall permit aboveground testing of particle accelerators, designed for use in well-logging, which results in the production of radiation, except in areas or facilities so controlled or shielded that the requirements of 641—40.15(136C) and 641—40.26(136C), as applicable, are met.

45.6(22) *Radiation surveys.*

a. Radiation surveys or calculations shall be made and recorded for each area where radioactive materials are used and stored.

b. Radiation surveys shall be made and recorded for the radiation levels in occupied positions and on the exterior of each vehicle used to transport radioactive material. Such surveys shall include each source of radiation or combination of sources to be transported in the vehicle.

c. If the sealed source assembly is removed from the logging tool before departing the job site, the logging tool detector shall be energized, or a survey meter used, to ensure that the logging tool is free of contamination.

d. Radiation surveys shall be made and recorded at the job site or wellhead for each tracer operation, except those using hydrogen-3, carbon-14, and sulfur-35. These surveys shall include measurements of radiation levels before and after the operation.

e. Records required pursuant to 45.6(22)"*a*" to *"d"* shall include the dates, the identification of individual(s) making the survey, the identification of survey instrument(s) used, and an exact description

of the location of the survey. Records of these surveys shall be maintained for inspection by the agency for two years after completion of the survey.

45.6(23) *Documents and records required at field stations.* Each licensee or registrant shall maintain, for inspection by the agency, the following documents and records for the specific devices and sources used at the field station:

a. Appropriate license, certificate of registration, or equivalent document(s);

b. Operating and emergency procedures;

c. Applicable regulations;

d. Records of the latest survey instrument calibrations pursuant to 45.6(8);

e. Records of the latest leak test results pursuant to 45.6(9);

f. Records of quarterly inventories required pursuant to 45.6(10);

g. Utilization records required pursuant to 45.6(11);

h. Records of inspection and maintenance required pursuant to 45.6(14);

i. Survey records required pursuant to 45.6(22); and

j. Training records required pursuant to 45.6(15).

45.6(24) *Documents and records required at temporary job sites.* Each licensee or registrant conducting operations at a temporary job site shall have the following documents and records available at that site for inspection by the agency:

a. Operating and emergency procedures;

b. Survey records required pursuant to 45.6(22) for the period of operation at the site;

c. Evidence of current calibration for the radiation survey instruments in use at the site;

d. When operating in the state under reciprocity, a copy of the appropriate license, certificate of registration, or equivalent document(s); and

e. Shipping papers for the transportation of radioactive material.

45.6(25) *Notification of incidents, abandonment, and lost sources.*

a. Notification of incidents and sources lost in other than downhole logging operations shall be made in accordance with appropriate provisions of 641—Chapter 40.

b. Whenever a sealed source or device containing radioactive material is lodged downhole, the licensee shall:

(1) Monitor at the surface for the presence of radioactive contamination with a radiation survey instrument or logging tool during logging tool recovery operations; and

(2) Notify the agency immediately by telephone and subsequently, within 30 days, by confirmatory letter if the licensee knows or has reason to believe that a sealed source has been ruptured. This letter shall identify the well or other location, describe the magnitude and extent of the escape of radioactive material, assess the consequences of the rupture, and explain efforts planned or being taken to mitigate these consequences.

c. When it becomes apparent that efforts to recover the radioactive source will not be successful, the licensee shall:

(1) Advise the well operator of the regulations of the appropriate state agency regarding abandonment and an appropriate method of abandonment, which shall include:

1. The immobilization and sealing in place of the radioactive source with a cement plug;

2. The setting of a whipstock or other deflection device; and

3. The mounting of a permanent identification plaque at the surface of the well, containing the appropriate information required by 45.6(25)*"d."*

(2) Notify the agency by telephone, giving the circumstances of the loss, and request approval of the proposed abandonment procedures, or specify the implemented abandonment before receiving approval because the licensee believed there was an immediate threat to public health and safety; and

(3) File a written report with the agency within 30 days of the abandonment. The licensee shall send a copy of the report to the appropriate state agency that issued permits or otherwise approved of the drilling operation. The report shall contain the following information:

1. Date of occurrence;

2. A description of the well-logging source involved, including the radionuclide and its quantity, chemical, and physical form;

3. Surface location and identification of the well;

4. Results of efforts to immobilize and seal the source in place;

5. A brief description of the attempted recovery effort;

6. Depth of the source;

7. Depth of the top of the cement plug;

8. Depth of the well;

9. The immediate threat to public health and safety justification for implementing abandonment if prior approval was not obtained in accordance with 45.6(25)*"c"*(2);

10. Any other information, such as a warning statement, contained on the permanent identification plaque; and

11. The names of state agencies receiving a copy of this report.

d. Whenever a sealed source containing radioactive material is abandoned downhole, the licensee shall provide a permanent plaque[2] for posting the well or well-bore. This plaque shall:

(1) Be constructed of long-lasting material, such as stainless steel or Monel; and

(2) Contain the following information engraved on its face:

1. The word "CAUTION";

2. The radiation symbol without the conventional color requirement;

3. The date of abandonment;

4. The name of the well operator or well owner;

5. The well name and well identification number(s) or other designation;

6. The sealed source(s) by radionuclide and activity;

7. The source depth and the depth to the top of the plug; and

8. An appropriate warning, depending on the specific circumstances of each abandonment.[3]

e. The licensee shall immediately notify the agency by telephone and subsequently by confirming letter if the licensee knows or has reason to believe that radioactive material has been lost in or to an underground potable aquifer. Such notice shall designate the well location and shall describe the magnitude and extent of loss of radioactive material, assess the consequences of such loss, and explain efforts planned or being taken to mitigate these consequences.

45.6(26) Reserved.

45.6(27) *Radioactive markers.* The licensee may use radioactive markers in wells only if the individual markers contain quantities of licensed material not exceeding the quantities specified in 641—Chapter 39, Appendix B, Exempt Quantities. The use of markers is subject only to the requirements of 45.6(10).

45.6(28) *Uranium sinker bars.* The licensee may use uranium sinker bars in well-logging applications only if they are legibly impressed with the words "CAUTION—RADIOACTIVE-DEPLETED URANIUM" and "NOTIFY CIVIL AUTHORITIES [or Company name] IF FOUND."

45.6(29) *Use of a sealed source in a well without a surface casing.* The licensee may use a sealed source in a well without a surface casing for protecting fresh water aquifers only if the licensee follows a procedure for reducing the probability of the source's becoming lodged in the well. The procedure must be approved by the NRC or licensing or agreement state.

45.6(30) *Energy compensation source.* The licensee may use an energy compensation source (ECS) which is contained within a logging tool, or other tool components, only if the ECS contains quantities of licensed material not exceeding 100 microcuries (3.7 MBq).

a. For well-logging applications with a surface casing for protecting fresh water aquifers, use of the ECS is only subject to the requirements of 45.6(9) to 45.6(11).

b. For well-logging applications without a surface casing for protecting fresh water aquifers, use of the ECS is only subject to the requirements of 45.6(4), 45.6(9) to 45.6(11), 45.6(25), and 45.6(29).

45.6(31) *Tritium neutron generator target source.*

a. Use of a tritium neutron generator target source that contains quantities not exceeding 30 curies (1110 MBq) and that is in a well with a surface casing to protect fresh water aquifers is subject to the requirements of this rule except subrules 45.6(4), 45.6(12), and 45.6(25).

b. Use of a tritium neutron generator target source that contains quantities exceeding 30 curies (1110 MBq) or that is in a well without a surface casing to protect fresh water aquifers is subject to the requirements of this rule except subrule 45.6(12).

[2]An example of a suggested plaque is shown in Appendix F of this chapter.

[3]Appropriate warnings may include: (a) "Do not drill below plug-back depth"; (b) "Do not enlarge casing"; or (c) "Do not re-enter the hole", followed by the words, "before contacting the Iowa Department of Public Health."

CHAPTER 45—APPENDIX A

SUBJECTS FOR INSTRUCTION OF RADIOGRAPHER'S ASSISTANTS

Training provided to qualify individuals as radiographer's assistants in compliance with 45.1(10) shall be presented on a formal basis. The training shall include the following subjects:

I. Fundamentals of radiation safety
- A. Characteristics of radiation
- B. Units of radiation dose and quantity of radioactivity
- C. Significance of radiation dose
  1. Radiation protection standards
  2. Biological effects of radiation
  3. Case histories of radiography accidents
- D. Levels of radiation from sources of radiation
- E. Methods of controlling radiation dose
  1. Working time
  2. Working distances
  3. Shielding

II. Radiation detection instrumentation to be used
- A. Use of radiation survey instruments
  1. Operation
  2. Calibration
  3. Limitations
- B. Survey techniques
- C. Use of personnel monitoring equipment
  1. Film badges
  2. Thermoluminescent dosimeters (TLDs)
  3. Pocket dosimeters
  4. OSL devices

III. The requirements of pertinent federal and state regulations

IV. The licensee's or registrant's written operating and emergency procedures

V. Radiographic equipment to be used
- A. Remote handling equipment
- B. Operation and control of radiographic exposure devices and sealed sources, including pictures or models of source assemblies (pigtails)
- C. Storage and transport containers, source changers
- D. Operation and control of X-ray equipment
- E. Collimators

CHAPTER 45—APPENDIX B

GENERAL REQUIREMENTS FOR INSPECTION OF INDUSTRIAL RADIOGRAPHIC EQUIPMENT

I. Panoramic devices (devices in which the sealed source is physically removed from the shielded container during exposure) shall be inspected for:

A. Radiographic exposure unit

1. Abnormal surface radiation levels anywhere on camera, collimator, or guide tube;
2. Condition of safety plugs;
3. Proper operation of locking mechanism;
4. Condition of pigtail connector;
5. Condition of carrying device (straps, handle, etc.);
6. Proper labeling.

B. Source tube

1. Rust, dirt, or sludge buildup inside the source tube;
2. Condition of source tube connector;
3. Condition of source stop;
4. Kinks or damage that could prevent proper operation;
5. Presence of radioactive contamination.

C. Control cables and drive mechanism

1. Proper drive mechanism with camera, as appropriate;
2. Changes in general operating characteristics;
3. Condition of connector on drive cable;
4. Drive cable flexibility, wear, and rust;
5. Excessive wear or damage to crank assembly parts;
6. Damage to drive cable conduit that could prevent the cable from moving easily;
7. Connection of the control cable connector with the pigtail connector for proper mating;
8. Proper operation of source position indicator, if applicable;
9. Presence of radioactive contamination.

II. Directional beam devices shall be inspected for:

A. Abnormal surface radiation;
B. Changes in the general operating characteristics of the unit;
C. Proper operation of shutter mechanism;
D. Chafing or binding of shutter mechanism;
E. Damage to the device that might impair its operation;
F. Proper operation of locking mechanism;
G. Proper drive mechanism with camera, as appropriate;
H. Condition of carrying device (strap, handle, etc.);
I. Proper labeling.

III. X-ray equipment shall be inspected for:

A. Change in the general operating characteristics of the unit;
B. Wear of electrical cables and connectors;
C. Proper labeling of console;
D. Proper console with machine, as appropriate;
E. Proper operation of locking mechanism;
F. Timer run-down cutoff;
G. Damage to tube head housing that might result in excessive radiation levels.

CHAPTER 45—APPENDIX C

TIME REQUIREMENTS FOR RECORD KEEPING

Specific Section	Name of Record	Time Interval Required for Record Keeping
45.1(4)	Receipt, transfer and disposal.	3 years.
45.1(5)	Survey instrument calibrations.	3 years.
45.1(6)	Quarterly inventory.	3 years.
45.1(7)	Utilization logs.	3 years.
45.1(8)	Quarterly inspection and maintenance.	3 years.
45.1(9)	High radiation area control devices or alarm systems.	Until disposal is authorized by the agency.
45.1(10)	Training and testing records.	3 years.
45.1(12)	Pocket dosimeter readings.	3 years.
	Pocket dosimeter calibrations.	3 years.
	Film badge, OSL device, or TLD reports.	Until the agency terminates the license.
	Alarming ratemeter calibrations.	3 years.
	Alarming ratemeter functions.	3 years.
	Estimates of overexposures.	Until the agency terminates the license.
45.1(19)	Current operating and emergency procedures.	Until the license is terminated.
	Superseded material.	3 years after change.
40.81(1)	Internal audit program.	3 years.
45.1(11)	Radiographer audits.	3 years.
45.2(5) and 45.3(7)	Radiation surveys.	2 years or until disposal is authorized by the agency if a survey was used to determine an individual's exposure.
45.1(16)	Records at temporary job sites.	During temporary job site operations.
45.2(6) and 45.3(8)	Annual evaluation of enclosed X-ray systems.	2 years.
45.3(5)	Leak tests.	3 years.
45.2(6)	Evaluation of certified cabinet X-ray systems.	2 years.

CHAPTER 45—APPENDIX D

OPERATING AND EMERGENCY PROCEDURES

The licensee's or registrant's operating and emergency procedures shall include instructions in at least the following:

A. Handling and use of sources of radiation for industrial radiography such that no individual is likely to be exposed to radiation doses that exceed the limits established in 641—Chapter 40;

B. Methods and occasions for conducting radiation surveys, including lock-out survey requirements;

C. Methods for controlling access to industrial radiography areas;

D. Methods and occasions for locking and securing sources or radiation;

E. Personnel monitoring and the use of personnel monitoring equipment, including steps to be taken immediately by industrial radiographic personnel in the event a pocket dosimeter is found to be off-scale;

F. Methods of transporting equipment to field locations, including packing of sources of radiation in the vehicles, placarding of vehicles, and controlling of sources of radiation during transportation (including applicable U.S. Department of Transportation requirements);

G. Methods or procedures for minimizing exposure of individuals in the event of an accident, including procedures for a disconnect accident, a transportation accident, and loss of a sealed source;

H. Procedures for notifying proper personnel in the event of an accident;

I. Specific posting requirements;

J. Maintenance of records (Appendix C); and

K. Inspection and maintenance of radiographic exposure devices, source changers, storage containers, transport containers, source guide tubes, crank-out devices, and radiation machines.

CHAPTER 45—APPENDIX E

SUBJECTS TO BE INCLUDED IN TRAINING COURSES FOR LOGGING SUPERVISORS

I. Fundamentals of radiation safety.
- A. Characteristics of radiation.
- B. Units of radiation dose and quantity of radioactivity.
- C. Significance of radiation dose.
  1. Radiation protection standards.
  2. Biological effects of radiation dose.
- D. Levels of radiation from sources of radiation.
- E. Methods of minimizing radiation dose.
  1. Working time.
  2. Working distances.
  3. Shielding.
- F. Radiation safety practices including prevention of contamination and methods of decontamination.

II. Radiation detection instrumentation to be used.
- A. Use of radiation survey instruments.
  1. Operation.
  2. Calibration.
  3. Limitations.
- B. Survey techniques.
- C. Use of personnel monitoring equipment.

III. Equipment to be used.
- A. Handling equipment.
- B. Sources of radiation.
- C. Storage and control of equipment.
- D. Operation and control of equipment.

IV. The requirements of pertinent federal and state regulations.

V. The licensee's or registrant's written operating and emergency procedures.

VI. The licensee's or registrant's record-keeping procedures.

CHAPTER 45—APPENDIX F

EXAMPLE OF PLAQUE FOR IDENTIFYING WELLS CONTAINING SEALED SOURCES CONTAINING RADIOACTIVE MATERIAL ABANDONED DOWNHOLE

The size of the plaque should be convenient for use on active or inactive wells, e.g., a 7-inch square. Letter size of the word "CAUTION" should be approximately twice the letter size of the rest of the information, e.g., ½-inch and ¼-inch letter size, respectively.

These rules are intended to implement Iowa Code chapters 136B and 136C.

[Filed 4/7/80, Notice 2/6/80—published 4/30/80, effective 7/1/80]
[Filed 5/17/85, Notice 2/27/85—published 6/5/85, effective, see rule 41.7]
[Filed 11/6/87, Notice 9/23/87—published 12/2/87, effective 1/6/88]
[Filed 7/17/92, Notice 5/27/92—published 8/5/92, effective 9/9/92]
[Filed 9/17/93, Notice 8/4/93—published 10/13/93, effective 1/1/94]
[Filed 7/14/94, Notice 6/8/94—published 8/3/94, effective 9/7/94]
[Filed 5/15/95, Notice 3/29/95—published 6/7/95, effective 7/12/95]
[Filed 1/11/96, Notice 10/11/95—published 1/31/96, effective 3/6/96]
[Filed 9/16/96, Notice 7/17/96—published 10/9/96, effective 11/16/96]
[Filed 5/16/97, Notice 4/9/97—published 6/4/97, effective 7/9/97]
[Filed 3/18/98, Notice 1/14/98—published 4/8/98, effective 7/1/98]
[Filed 4/2/99, Notice 1/13/99—published 4/21/99, effective 7/1/99]
[Filed 6/25/99, Notice 5/5/99—published 7/14/99, effective 9/15/99]
[Filed 3/15/00, Notice 1/26/00—published 4/5/00, effective 5/10/00]
[Filed 3/16/01, Notice 2/7/01—published 4/4/01, effective 5/9/01]
[Filed 5/10/01, Notice 4/4/01—published 5/30/01, effective 7/4/01]
[Filed 3/14/02, Notice 2/6/02—published 4/3/02, effective 5/8/02]
[Filed 11/15/02, Notice 10/2/02—published 12/11/02, effective 1/15/03]
[Filed 3/14/03, Notice 2/5/03—published 4/2/03, effective 5/7/03]
[Filed 3/12/04, Notice 2/4/04—published 3/31/04, effective 5/5/04]
[Filed 3/11/05, Notice 2/2/05—published 3/30/05, effective 5/4/05]
[Filed 3/9/06, Notice 2/1/06—published 3/29/06, effective 5/3/06]
[Filed 7/13/07, Notice 6/6/07—published 8/1/07, effective 9/5/07]

[Filed ARC 8982B (Notice ARC 8762B, IAB 5/19/10), IAB 8/11/10, effective 9/15/10]
[Filed ARC 1639C (Notice ARC 1470C, IAB 5/28/14), IAB 10/1/14, effective 11/5/14]

CHAPTER 46
MINIMUM REQUIREMENTS FOR TANNING FACILITIES

641—46.1(136D) Purpose and scope. This chapter provides for the permitting and regulation of tanning facilities and devices used for the purpose of tanning human skin through the application of ultraviolet radiation. This includes, but is not limited to, public and private businesses, hotels, motels, apartments, condominiums, and health and country clubs.

All references to Code of Federal Regulations (CFR) in this chapter are those in effect as of April 30, 2007.

These rules stipulate minimum safety requirements relating to the operation of tanning devices; procedures for obtaining a permit; qualifications for tanning facility operators; and procedures for health departments to provide for the inspection of tanning facilities and enforcement of these rules. Tanning facilities which are in compliance with these rules are not relieved from the requirements of any other federal and state regulations or local ordinances.

641—46.2(136D) Definitions.

"Board of health" means a county, city, or district board of health that has a 28E agreement with the Iowa department of public health to perform inspections under this chapter.

"Cleansing" means to remove soil, dirt, oils or other residues from the surface of the tanning unit which may come into contact with the skin.

"Cleansing agent" means a substance capable of producing the effect of "cleansing." These agents shall not adversely affect the equipment or the health of the consumer and shall be acceptable to the department or board of health.

"Consumer" means any member of the public who is provided access to a tanning facility in exchange for a fee or other compensation, or any individual who, in exchange for a fee or other compensation, is afforded use of a tanning facility as a condition or benefit of membership or access.

"Department" means the Iowa department of public health.

"Director" means the director of public health or the director's designee.

"Exposure position" means any position, distance, orientation, or location relative to the radiation surfaces of a tanning device at which the user is intended to be exposed to ultraviolet radiation from the product, as recommended by the manufacturer.

"Formal training" means a course of instruction approved by the department for operators of tanning facilities.

"Health care professional" means an individual, licensed by the state of Iowa, who has received formal medical training in the use of phototherapy.

"Inspection" means an official examination or observation including but not limited to tests, surveys, and monitoring to determine compliance with rules, orders, requirements, and conditions of these rules.

"Manufacturer's recommendations" means written guidelines established by a manufacturer and approved by the U.S. Food and Drug Administration for the installation and operation of the manufacturer's equipment.

"Operator" means an individual designated to control operation of the tanning facility and to instruct and assist the consumer in the proper operation of the tanning devices.

"Permit" or *"permit to operate"* means a document issued by the department which authorizes a person to operate a tanning facility in Iowa.

"Person" means any individual, corporation, partnership, firm, association, trust, estate, public or private institution, group, agency, political subdivision of this state, any other state or political subdivision or agency thereof, and any legal successor, representative, agent, or agency of the foregoing, but shall not include federal government agencies.

"Phototherapy device" means a piece of equipment that emits ultraviolet radiation and is used by a health care professional in the treatment of disease.

"Tanning device" means any equipment that emits electromagnetic radiation with wavelengths in air between 200 and 400 nanometers and that is used for tanning of human skin, such as sunlamps,

tanning booths, or tanning beds. The terms also include any accompanying equipment such as protective eyewear, timers, and handrails.

"Tanning facility" means a place that provides access to tanning devices for compensation.

"Ultraviolet radiation" means electromagnetic radiation with wavelengths in air between 200 and 400 nanometers.

641—46.3(136D) Exemptions. The department may, upon application or upon its own initiative, grant exemptions from the requirements of these rules as long as it will not result in undue hazard to public health and safety. The following categories of devices are exempt from the provisions of this chapter:

46.3(1) *Other purposes.* Devices intended for purposes other than the deliberate exposure of human skin to ultraviolet radiation which produce or emit ultraviolet radiation incidental to their proper operation.

46.3(2) *Personal use.* Tanning devices which are limited exclusively to personal use by an individual and this individual's immediate family. Multiple ownership of the device by persons for personal use only does not qualify it for the "personal use only" exemption.

46.3(3) *Phototherapy devices.* Phototherapy devices used by a properly trained health care professional in the treatment of disease.

641—46.4(136D) Permits and fees.

46.4(1) *Permit to operate.* No tanning facility shall be operated in the state without having a permit to operate issued by the department.

46.4(2) *Application requirements for permit.* Each person acquiring or establishing a tanning facility shall:

a. Apply for a permit prior to beginning operation. The application shall be completed on forms provided by the department or board of health and shall contain all information required by the form and accompanying instructions. A nonrefundable application fee of $5 shall be remitted with the application.

b. A $15 returned check fee will be charged for each check returned for insufficient funds.

c. The permit holder shall notify the department in writing within 30 days of any changes, additions, or deletions to the initial or renewal application as appropriate. This request does not apply to changes involving replacement of components in tanning equipment.

46.4(3) *Expiration of permit.* Except as provided in 46.4(4)*"b,"* each permit shall expire at the end of the specified day in the month and year stated therein.

46.4(4) *Renewal of permit.*

a. Permits shall be renewed annually upon acceptance of a renewal application provided by the department and upon receipt of the renewal fee of $5.

b. If application has been filed prior to the expiration date of the existing permit, the existing permit shall not expire until the application status has been finally determined by the department.

c. A $25 fee will be charged per month for failure to pay annual permit fees starting the month of expiration of the facility's permit to operate. This fee is added to the annual fee not paid.

46.4(5) *Transfer or termination of permit.*

a. No permit shall be transferable from one person to another or from one tanning facility to another.

b. A permit shall be returned to the department or board of health if the facility ceases business or otherwise ceases on a permanent basis or changes ownership.

46.4(6) *Denial, revocation, or termination of permit.*

a. The department may deny, suspend or revoke a permit applied for or issued pursuant to this chapter for any of the following reasons:

(1) Submission of false statements in the application for a permit or in any statement of fact required by provisions of this chapter;

(2) Because of conditions revealed by the application or any report, record, inspection or other means which would warrant the department to refuse to grant a permit on an original application;

(3) Operation of the tanning facility in a manner that causes or threatens to cause hazard to the public health or safety;

(4) Failure to allow authorized representatives of the department or board of health to enter the tanning facility at reasonable times for the purpose of determining compliance with the provisions of this chapter, conditions of the permit or an order of the department or board of health;

(5) Failure to pay fees or costs required in rule 46.4(136D);

(6) Violation of any of the provisions of this chapter or of Iowa Code chapter 136D.

b. Except in cases where public health and safety require otherwise, prior to the institution of proceedings for suspension or revocation of a permit, the department or board of health shall:

(1) Call to the attention of the permit holder, in writing, the facts or conduct which may warrant such actions, and

(2) Provide opportunity for the permit holder to demonstrate or achieve compliance with all lawful requirements.

c. Any person aggrieved by a decision by the department to deny a permit or to suspend or revoke a permit after issuance may request a hearing under procedures established by the department.

d. Once a permit to operate has been suspended or revoked, it may be reinstated upon receipt of a fee of $50 and completion of all other agency requirements. This fee is in addition to other applicable fees.

46.4(7) *Inspections.*

a. Inspections shall be conducted annually.

b. Inspection cost.

(1) An inspection cost of $33 per tanning device shall be billed to the permit holder up to a maximum of $330 per facility.

(2) Inspection costs shall be due upon receipt of payment due. When the tanning facility is located within a contracted area of a board of health, the costs billed will be paid to the contracted board of health or its designee.

(3) Inspection costs not received within 45 days of the date of billing will be assessed a $25 penalty for each month or fraction thereof that the bill is delinquent.

(4) A penalty fee of $25 per facility may be assessed for the following:

1. Failure to respond to a notice of violation within 30 days of the date of the inspection.
2. Failure to correct violations cited during the inspection.

c. Inspections shall include the following areas: proper operation and maintenance of devices, review of required records and training documentation, operator understanding and competency, and the requirements of these rules.

641—46.5(136D) Construction and operation of tanning facilities. Unless otherwise ordered or approved by the department, each tanning facility shall be constructed, operated, and maintained to meet the following minimum requirements:

46.5(1) A tanning facility shall provide and post the following warning signs and statements that describe the hazards associated with the use of tanning devices:

a. A warning sign in a conspicuous location readily visible to persons entering the establishment. This warning sign shall use 0.5-inch (12.7-millimeter) letters for "DANGER, ULTRAVIOLET RADIATION" and 0.25-inch (6.4-millimeter) letters for all other lettering. The sign shall use red lettering against a white background, be at least 9.0 inches by 12.0 inches (22.9 centimeters × 30.5 centimeters) and have the following wording:

DANGER
ULTRAVIOLET RADIATION
— Overexposure can cause

- Eye and skin injury
- Allergic reaction

— Repeated exposure may cause
- Premature aging of the skin
- Skin cancer

— Failure to wear protective eyewear may result in
- Severe burns to eyes
- Long-term injury to eyes

— Medication or cosmetics may increase your sensitivity

---

b. A warning sign with the identical wording set forth in 46.5(1)*"a"* posted within one meter of the tanning device in a conspicuous location readily visible to a person preparing to use the device. This warning sign shall use 0.5-inch (12.7-millimeter) letters for "DANGER, ULTRAVIOLET RADIATION" and 0.25-inch (6.4-millimeter) letters for all other lettering. The sign shall use red lettering against a white background and be at least 6 inches by 9 inches (15.2 centimeters × 22.9 centimeters) in size.

c. A tanning facility shall require each consumer to read the information in Appendices 1, 2, and 3 prior to the consumer's initial exposure and annually thereafter.

(1) The operator shall then require the consumer to sign a statement that the information has been read and understood.

(2) The information in Appendices 1, 2, and 3 shall be posted in each tanning room.

46.5(2) Federal certification.

a. Only tanning devices manufactured and certified under the provisions of 21 CFR Part 1040.20, "Sunlamp products and ultraviolet lamps intended for use in sunlamp products," shall be used in tanning facilities. Compliance shall be based on the standard in effect at the time of manufacture as shown on the device identification label required by 21 CFR Parts 1010.2 and 1010.3.

b. Labeling shall meet the following requirements, be visible on each unit and be permanently affixed. Labeling shall include:

(1) A warning statement with the words "DANGER-Ultraviolet radiation. Follow instructions. Avoid overexposure. As with natural sunlight, overexposure can cause eye and skin injury and allergic reactions. Repeated exposure may cause premature aging of the skin and skin cancer. WEAR PROTECTIVE EYEWEAR; FAILURE TO MAY RESULT IN SEVERE BURNS OR LONG-TERM INJURY TO THE EYES. Medications or cosmetics may increase your sensitivity to the ultraviolet radiation. Consult a physician before using a sunlamp if you are using medications or have a history of skin problems or believe yourself especially sensitive to sunlight. If you do not tan in the sun, you are unlikely to tan from the use of this product."

(2) Recommended exposure position(s). Any exposure position may be expressed either in terms of a distance specified both in meters and in feet (or in inches) or through the use of markings or other means to indicate clearly the recommended exposure position.

(3) Directions for achieving the recommended exposure position(s) and a warning that the use of other positions may result in overexposure.

(4) A recommended exposure schedule including duration and spacing of sequential exposures and maximum exposure time(s) in minutes.

(5) A statement of the time it may take before the expected results appear.

(6) Designation of the ultraviolet lamp type to be used in the product.

46.5(3) Tanning device timers.

a. Each tanning device shall have a timer which complies with the requirements of 21 CFR Part 1040.20. The maximum timer interval shall not exceed the manufacturer's maximum recommended exposure time by a factor greater than ± 10 percent of the indicated setting.

b. Each tanning device must have a method of remote timing located so that consumers may not control their own exposure time.

c. Tokens for token timers shall not be issued to any consumer in quantities greater than the device manufacturer's maximum recommended exposure time for the consumer.

46.5(4) Each tanning device shall incorporate a control on the product to enable the consumer to manually terminate the radiation emission from the product at any time without disconnecting the electrical source or removing the ultraviolet lamp.

46.5(5) The operator shall ensure that the facility's interior temperature does not exceed 100 degrees F or 38 degrees C.

46.5(6) Condition of tanning devices.

a. There shall be physical barriers to protect consumers from injury induced by falling against or breaking the lamps.

b. The tanning devices shall be maintained in good repair and comply with all state and local electrical code requirements.

46.5(7) Additional requirements for stand-up booths.

a. There shall be physical barriers (e.g., handrails) or other means (floor markings) to indicate the proper exposure distance between ultraviolet lamps and the consumer's skin.

b. The construction of the booth shall be such that it will withstand the stress of use and the impact of a falling person.

c. Access to the booth shall be of rigid construction; doors shall open outwardly. Handrails and nonslip floors shall be provided.

46.5(8) Protective eyewear.

a. Eyewear shall not be reused by another consumer.

b. Protective eyewear shall meet the requirements of 21 CFR Part 1040.20(c)(4).

c. Protective eyewear shall not be altered in any manner that would change its use as intended by the manufacturer (e.g., removal of straps).

d. A tanning facility operator shall not allow a consumer to use a tanning device if that consumer does not use the protective eyewear required by this subrule. To verify that a consumer has the proper eyewear, the operator must:

(1) Ask to see the eyewear before the consumer enters the tanning room; or

(2) Provide disposable eyewear in the tanning room at all times and post a sign stating that the disposable eyewear is available and that eyewear must be worn.

e. A tanning facility operator shall instruct the consumer in the proper utilization of the protective eyewear required by this subrule.

46.5(9) Operation.

a. A trained operator must be present when a tanning device is operated. The operator must be within hearing distance to allow the consumer to easily summon help if necessary. If the operator is not in the immediate vicinity during use, the following conditions must be met:

(1) The consumer can summon help through use of an audible device such as an intercom or buzzer; and

(2) The operator or emergency personnel can reach the consumer within a reasonable amount of time after being summoned.

b. The facility permit to operate shall be displayed in an open public area of the tanning facility.

c. A record shall be kept by the facility operator of each consumer's total number of tanning visits and tanning times, exposure lengths in minutes, times and dates of the exposure, and any injuries or illness resulting from the use of a tanning device.

d. Any tanning injury not requiring a physician's care and any resulting changes in tanning sessions shall be noted in the consumer's file. A written report of any tanning injury requiring a physician's care shall be forwarded by the permit holder to the department within five working days of its occurrence or knowledge thereof. The report shall include:

(1) The name of the affected individual;

(2) The name and location of the tanning facility involved;

(3) The nature of the injury;

(4) The name and address of the health care provider treating the affected individual, if any; and

(5) Any other information considered relevant to the situation.

e. Defective or burned-out lamps or filters shall be replaced with a type intended for use in that device as specified on the product label on the tanning device or with lamps or filters that are "equivalent" under 21 CFR Part 1040, Section 1040.20, and policies applicable at the time of lamp manufacture.

f. The permit holder shall replace ultraviolet lamps and bulbs, which are not otherwise defective or damaged, at such frequency or after such duration of use as may be recommended by the manufacturer of such lamps or bulbs.

g. Contact surfaces of tanning devices shall be:

(1) Cleansed by the operator with a cleansing agent between each use;

(2) Covered by a nonreusable protective material during each use; or

(3) Cleansed by the consumer provided the following conditions are met:

1. The operator instructs the consumer annually on how to properly cleanse the unit;

2. The consumer annually signs a statement stating that the consumer agrees to cleanse the unit after each use;

3. Signs are posted in each tanning room reminding the consumer to cleanse the tanning unit after each use and stating the proper way to cleanse the unit; and

4. The operator cleanses the tanning unit at least once a day.

h. Any records or documentation required by this chapter must be maintained in the tanning facility for a minimum of two years. Records maintained on computer systems shall be regularly copied, at least monthly, and updated on storage media other than the hard drive of the computer. An electronic record must be retrievable as a printed copy.

i. The operator shall limit the exposure of the consumer to the maximum exposure frequency and session duration recommended by the manufacturer.

j. When a tanning device is being used, no other person shall be allowed to remain in the tanning device area.

k. No person or facility shall advertise or promote tanning packages labeled as "unlimited" unless tanning frequency limits set by the manufacturer are included in advertisements.

46.5(10) Training of operators.

a. No individual shall begin functioning as an operator unless the individual has satisfactorily completed a training program. Training shall include but not be limited to:

(1) The requirements of this chapter;

(2) Procedures for correct operation of the tanning facility and tanning devices;

(3) The determination of skin type of consumers and appropriate determination of duration of exposure to tanning devices;

(4) Recognition of reaction or overexposure;

(5) Manufacturer's procedures for operation and maintenance of tanning devices;

b. Owners and managers must complete formal training approved by the department. All owners and managers trained after December 31, 1997, must satisfactorily pass a certification examination approved by the department before operating a tanning facility or training employees.

c. For operators trained after December 31, 1997. Owners and managers are responsible to train operators in the above topics and to provide review as necessary. Training programs shall be approved by the department and include final testing. Operators shall be questioned during inspections as to the level of their understanding and competency in operating the tanning device.

d. Proof of training for both owner/managers and employees must be maintained in the tanning facility and available for inspection. For operators trained after December 31, 1997, the employee record shall be the original test which bears the signature of the employee, the date, and a statement signifying that all answers have been completed by the employee and without prior knowledge of the scoring key.

e. Operators shall be at least 16 years of age.

f. Operators shall complete the required training and testing every five years.

46.5(11) Promotional materials. A tanning facility shall not claim, or distribute promotional materials that claim, that using a tanning device is safe or free from risk or that the use of the device will result in medical or health benefits. The only claim that may be made is that the device is for cosmetic use only.

46.5(12) Requirements for electronically controlled facilities. Electronically controlled facilities are those facilities that rely on electronic means to monitor consumers.

a. Entry into the facility is allowed by card only. Two individuals may not enter under the same card. The card is specifically activated for tanning use if the facility offers other activities.

b. Police and all emergency services will have access to the facility through a key box located outside the entrance of the facility.

c. The tanning unit will not activate if the card is not programmed for tanning. The card will not activate if two individuals are in the tanning room.

d. The consumer must sign a tanning agreement that states the number of minutes per session, that the consumer agrees to wear protective eyewear, that the consumer will cleanse the unit after tanning, and that the consumer is aware of the emergency access in each room.

e. The card will be programmed for the number of minutes the consumer is allowed to tan. The card may be reprogrammed for an increase in minutes per session only after the consumer has reviewed and re-signed the Tanning Agreement. After 30 consecutive days without the consumer's accessing the tanning facility, the card will be deactivated and the consumer must reapply to access the tanning unit.

f. The operator will demonstrate to each consumer how to properly cleanse the unit after tanning, including the top, bottom, and handles. A sign will be placed in each room explaining the cleansing process. The operator will cleanse the units at least once a day when they are in use.

g. Free disposable eyewear will be placed in each room along with a sign stating that the disposable eyewear is available and that eyewear must be worn.

h. An emergency call button or device will be placed in each tanning room conveniently located within reach of the tanning bed. This device will call the operator or emergency personnel.

i. During annual inspections, the inspector may ask any consumer about any of the above processes.

641—46.6(136D) Inspections, violations and injunctions.

46.6(1) The director or an authorized agent shall have access at all reasonable times to any tanning facility to inspect the facility to determine if this chapter is being violated.

46.6(2) A person who operates or uses a tanning device or tanning facility in violation of this chapter or of any rule adopted pursuant to this chapter is guilty of a simple misdemeanor.

46.6(3) If the agency finds that a person has violated, or is violating or threatening to violate, this chapter and that the violation creates an immediate threat to the health and safety of the public, the agency may petition the district court for a temporary restraining order to restrain the violation or threat of violation.

If a person has violated, or is violating or threatening to violate, this chapter, the agency may petition the district court for an injunction to prohibit the person from continuing the violation or threat of violation.

46.6(4) On application for injunctive relief and a finding that a person is violating or threatening to violate this chapter, the district court shall grant any injunctive relief warranted by the facts.

46.6(5) Enforcement.

a. The department shall take the following steps or use county ordinances or any other applicable ordinances, resolutions, rules or regulations when enforcement of these rules is necessary.

(1) Cite each section of the Iowa Code or rules violated.

(2) Specify the manner in which the owner or operator failed to comply.

(3) Specify the steps required for correcting the violation.

(4) Request a corrective action plan, including a time schedule for completion of the plan.

(5) Set a reasonable time limit, not to exceed 30 days from the receipt of the notice, within which the permit holder must respond.

b. The department shall review the corrective action plan and approve it or require that it be modified.

c. In cases where the permit holder fails to comply with conditions of the written notice, the agency shall send a regulatory letter, via certified mail, advising the permit holder that unless action is

taken within five days of receipt, the case shall be turned over to the appropriate state/city/county attorney for court action.

Appendix 1
POTENTIAL PHOTOSENSITIZING AGENTS

1. Not all individuals who use or take these agents will experience a photosensitive reaction or the same degree of photosensitive reaction. An individual who experiences a reaction on one occasion will not necessarily experience it again or every time.
2. Names of agents should be considered only as examples. They do not represent all the names under which a product may be sold. A more complete list is available from the facility operator.
3. If you are using an agent in any of these classes, you should reduce UV exposure even if your particular medication is not listed.

Acne treatment (Retinoic acid, Retin-A) Psoralens (5-Methoxypsoralen, 8-Methoxypsoralen, 4,5,8-trimethyl-psoralen)

Antibacterials (deodorant bar soaps, antiseptics, cosmetics, halogenated carbanilides, halogenated phenols, halogenated salicylanilides, bithionol, chlorhexidine, hexachlorophene)

Antibiotics, anti-infectives (Tetracyclines)

Anticonvulsants (carbamazepine, trimethadione, promethazine)

Antidepressants (amitriptyline, Desipramine, Imipramine, Nortiptyline, Protiptyline), Tranquilizers, anti-emetics (Phenothiazines)

Antidiabetics (glucose-lowering agents) (sulfonylureas, oral antidiabetics, hypoglycemics)

Antihistamines (diphenhydramine, promethazine, triprolidine, chlorpheniramine)

Anti-inflammatory (Piroxicam), Non-steroidal anti-inflammatory drugs (Ibuprofen, Naproxen, Piroxicam)

Antimicrobials (griseofulvin), Sulfonamides ("Sulfa drugs," antimicrobials, anti-infectives)

Atropine-like drugs (anticholinergics, antiparkinsonism drugs, antispasmodics, synthetic muscle relaxants)

Coal tar and derivatives (Denorex, Tegrin, petroleum products used for psoriasis and chronic eczema and in shampoos)

Contraceptives, oral and estrogens (birth control pills, estrogens, progesterones)

Dyes (used in cosmetic ingredients, acridine, anthracene, cosin (lipstick), erythrosine, fluorescein, methyl violet, methylene blue, rose bengal)

Perfumes and toilet articles (musk ambrette, oil of bergamot, oil of cedar, oil of citron, oil of lavender, oil of lemon, oil of lime, oil of rosemary, oil of sandalwood)

Thiazide diuretics ("water pills")

Appendix 2

SUN-REACTIVE SKIN TYPES USED IN CLINICAL PRACTICE

SKIN TYPE	SKIN REACTIONS TO SOLAR RADIATION [a] EXAMPLES	EXAMPLES
I	Always burns easily and severely (painful burn). Tans little or none and peels.	People most often with fair skin, blue eyes, freckles. Unexposed skin is white.
II	Usually burns easily and severely (painful burn). Tans minimally or lightly, also peels.	People most often with fair skin; red or blonde hair; blue, hazel or even brown eyes. Unexposed skin is white.
III	Burns moderately and tans about average.	Normal average Caucasoid. Unexposed skin is white.
IV	Burns minimally, tans easily, and above average with each exposure. Exhibits IPD (immediate pigment darkening) reaction.	People with white or light brown skin, dark skin, dark brown hair, dark eyes. Unexposed skin is brown.
V	Rarely burns, tans easily and substantially. Always exhibits IPD reaction.	Unexposed skin is brown.
VI	Never burns and tans profusely; exhibits IPD reaction.	Unexposed skin is black.

(a) Based in the first 45-60 minutes (= 2-3 minimum erythema dose) exposure of the summer sun (early June) at sea level

(b) Rescinded IAB 3/29/06, effective 5/3/06.

Appendix 3
POTENTIAL NEGATIVE HEALTH EFFECTS
RELATED TO ULTRAVIOLET EXPOSURE

1. Increased risk of skin cancer later in life.
2. Increased risk of skin thickening, age spots, irregular pigmentation, and premature aging.
3. Possibility of burning or rash, especially if using any of the potential photosensitizing drugs and agents. The consumer should consult a physician before using a tanning device if using medications, if there is a history of skin problems or if the consumer is especially sensitive to sunlight.
4. Increased risk of eye damage unless proper eyewear is worn. Iowa law requires the use of proper eyewear during tanning sessions.

TANNING SYSTEMS

1. Low-pressure tanning systems use a higher percentage of UVB rays which penetrate only the upper layer of skin and can cause burning more easily than high-pressure tanning systems. Low-pressure systems require more frequent sessions to maintain a tan.
High-intensity tanning systems use more lamps and shorter tanning sessions than low-intensity tanning systems. These are still classified as low-pressure systems.
2. High-pressure tanning systems use a higher percentage of UVA rays which penetrate more deeply and can permanently damage the lower layers of skin and increase the incidences of skin cancers. High-pressure systems require fewer and less frequent sessions to maintain a tan.
3. The exposure schedule for each specific unit is shown on the labeling on the tanning unit. Iowa law requires the operator to limit the exposure of each consumer to the exposure schedule shown on the unit in which the consumer is tanning.

These rules are intended to implement Iowa Code chapter 136D.

[Filed 1/14/91, Notice 10/17/90—published 2/6/91, effective 3/13/91]
[Filed 9/14/92, Notice 8/5/92—published 9/30/92, effective 11/4/92]
[Filed 1/11/96, Notice 10/11/95—published 1/31/96, effective 3/6/96]
[Filed 9/16/96, Notice 7/17/96—published 10/9/96, effective 11/16/96]
[Filed 2/26/98, Notice 9/10/97—published 3/25/98, effective 4/29/98]
[Filed 4/2/99, Notice 1/13/99—published 4/21/99, effective 7/1/99]
[Filed 3/15/00, Notice 1/26/00—published 4/5/00, effective 5/10/00]
[Filed 3/16/01, Notice 2/7/01—published 4/4/01, effective 5/9/01]
[Filed 3/14/02, Notice 2/6/02—published 4/3/02, effective 5/8/02]
[Filed 3/12/04, Notice 2/4/04—published 3/31/04, effective 5/5/04]
[Filed 3/11/05, Notice 2/2/05—published 3/30/05, effective 5/4/05]
[Filed 3/9/06, Notice 2/1/06—published 3/29/06, effective 5/3/06]
[Filed 3/16/07, Notice 1/31/07—published 4/11/07, effective 5/16/07]
[Filed 7/13/07, Notice 6/6/07—published 8/1/07, effective 9/5/07]
[Filed 5/14/08, Notice 4/9/08—published 6/4/08, effective 7/9/08]

CHAPTERS 47 to 49
Reserved

CHAPTER 50
ORAL HEALTH

641—50.1(135) Purpose. The purpose of establishing the state public health dental director position and the oral health bureau within the Iowa department of public health is to create a strong oral health unit with sufficient leadership and capacity to determine priorities, develop plans, make funding decisions, and establish policies that improve the oral health of all Iowans. These rules will enhance the efficiency of state government, strengthen relationships with federal and local authorities, and improve interrelationships between the public and private sectors.

641—50.2(135) Definitions. For purposes of this chapter, the following definitions apply:

"Core public health functions" means the functions of health assessment, policy development, and assurance.

1. Assessment: regular collection, analysis, interpretation, and communication of information about health conditions, risks, and assets.
2. Policy development: development, implementation, and evaluation of plans and policies, for public health in general and priority health needs in particular, in a manner that incorporates scientific information and community values and is in accordance with state public health policy.
3. Assurance: ensuring, by encouragement, regulation, or direct action, that programs and interventions which maintain and improve health are carried out.

"Dental care for persons with disabilities program" means the department program to provide dental services to low-income children and young adults with special health care needs.

"Dental home" means a network of individualized care based on risk assessment, which includes oral health education, dental screenings, preventive services, diagnostic services, treatment services, and emergency services.

"Dental sealant program" means the department program implemented through public or private nonprofit agencies to provide dental examinations or screenings and dental sealants to children in a school-based setting.

"Department" means the Iowa department of public health.

"Direct dental services" means those services generally delivered one-on-one between a health professional and a client.

"Enabling services" means services that allow or provide for access to and the derivation of benefits from the array of basic health care services and includes activities such as outreach, case management, health education, transportation, translation, home visits, support services, and other services.

"EPSDT" means the Early and Periodic Screening, Diagnosis, and Treatment program which provides for regular preventive health care services for children aged 0 to 21 as authorized by Title XIX of the Social Security Act.

"Fluoride mouth rinse program" means the department program implemented through elementary schools and middle schools, which includes oral health education and weekly rinsing with fluoride. The program targets schools with children at high risk for tooth decay.

"Gap filling" means direct health services supported by public health staff or resources that are needed but are not otherwise accessible in the community.

"Infrastructure building" means activities directed at improving and maintaining the health status of all clients by providing support for the development and maintenance of comprehensive health service systems, including development and maintenance of health service standards or guidelines, training, data, and planning systems.

"I-Smile program" means the department program implemented through public and private nonprofit agencies and private health care providers to increase access to dental care for children and to ensure a dental home.

"Medicaid" means the Medicaid program authorized by Title XIX of the Social Security Act and funded through the Iowa department of human services from the United States Department of Health and Human Services.

"Oral health education" means information provided by a health professional about dental disease, prevention, and anticipatory guidance, including oral habits, oral development, fluoride exposure, and dietary counseling.

"Population-based services" means preventive interventions and personal health services developed for and available to populations of the state rather than for individuals in a one-on-one situation. Disease prevention, health promotion, and statewide outreach are major components.

"Senior smiles program" means the department program implemented through public and nonprofit private agencies to provide oral screenings and interventions for older Iowans.

"Title V" means Title V of the Social Security Act and the federal requirements contained in the Omnibus Reconciliation Act of 1989 (Public Law 101-239) which address the Maternal and Child Health and Children with Special Health Care Needs programs.

"Title V maternal and child health program" means the department program implemented through local public or private nonprofit agencies for the assurance of access to preventive and primary child and maternal health services and services to children with special health care needs in accordance with 641—Chapter 76, Maternal and Child Health Program. Through this program, agencies are responsible for ensuring access to dental services, with an emphasis on early intervention and preventive oral health care beginning at or near the age of 12 months and continuing into adulthood.

"Title XIX" means the Medicaid program authorized by Title XIX of the Social Security Act and funded through the Iowa department of human services from the United States Department of Health and Human Services.

"Vulnerable populations" means individuals and groups whose needs are not addressed by traditional dental service providers and health care systems.

[**ARC 7672B**, IAB 4/8/09, effective 4/15/09]

641—50.3(135) Dental director responsibilities. The state public health dental director shall provide overall leadership of the state oral health program and shall be responsible for the following duties:

1. Plan and direct all work activities of the statewide public health dental program.
2. Develop comprehensive initiatives for oral health prevention and improved access to dental care.
3. Evaluate the effectiveness of the statewide public health dental program and of program personnel.
4. Manage the oral health bureau, including direction, supervision, and fiscal management of bureau staff.
5. Represent the department to external stakeholders, including public and private organizations, providers, and the general public.
6. Other related work as required.

641—50.4(135) Oral health bureau functions. The bureau shall be responsible for the core public health functions of assessment, policy development, and assurance of oral health services in Iowa.

50.4(1) *Assessment.* The bureau shall develop and implement an ongoing oral health surveillance system to evaluate and monitor the oral health status of children and other vulnerable population groups in Iowa. Assessment activities may include the following:

a. Assess oral health status and needs so that problems can be identified and addressed.

b. Assess determinants of identified oral health needs, including resources.

c. Assess the fluoridation status of water systems and other sources of fluoride.

d. Identify, investigate, and monitor oral health problems and health hazards.

50.4(2) *Policy development.* The bureau shall facilitate ongoing strategic planning and application of evidence-based research in oral health policy development to improve access to care and the overall oral health of all Iowans. Policy development activities may include the following:

a. Develop plans and policies through a collaborative process that supports individual and community oral health efforts to address oral health needs.

b. Provide leadership to address oral health problems by maintaining a strong oral health unit within the department.

c. Mobilize partnerships with policymakers, professionals, organizations, groups, the public and others to identify and implement solutions to oral health problems.

50.4(3) *Assurance.* The bureau shall assist Iowans in maintaining optimal oral health throughout all stages of life by providing or ensuring infrastructure-building, population-based, and enabling services at the state and local level. Infrastructure-building and enabling services shall target the improvement of access to dental care and prevention. Population-based services shall include public health training and technical assistance, educational activities that increase oral health awareness, and activities that improve dental support systems for families.

The bureau shall leverage federal, state, and local resources to administer grant programs which include Title V maternal and child health, including the Medicaid and EPSDT programs; I-Smile program; dental sealant program; fluoride mouth rinse program; dental care for persons with disabilities program; senior smiles program; and other new and existing programs. Assurance activities may include the following:

a. Provide assistance and resources to local public health programs for community capacity-building efforts to identify vulnerable populations and to develop innovative approaches that link people to needed oral health services, including gap-filling direct dental services.

b. Inform, educate, and empower the public regarding oral health problems and solutions.

c. Promote and enforce laws and regulations that protect and improve oral health, ensure safety, and assure public accountability for the public's well-being.

d. Assure that the public health and personal health workforce has the capacity and expertise to effectively address oral health needs.

e. Evaluate the effectiveness, accessibility, and quality of population-based and personal oral health services.

f. Conduct research and support projects to gain new insights and promote innovative solutions to oral health problems.

641—50.5(135) Funding. The oral health bureau and the state public health dental director shall be funded through federal Title V funds and state matching funds, state general funds, department of human services funding, and other funds as available.

These rules are intended to implement Iowa Code Supplement sections 135.14 and 135.15.

[Filed 7/10/08, Notice 5/21/08—published 7/30/08, effective 9/3/08*]
[Editorial change: IAC Supplement 8/27/08]
[Editorial change: IAC Supplement 11/5/08]
[Filed Emergency ARC 7672B, IAB 4/8/09, effective 4/15/09]

*September 3, 2008, effective date of ARC 7023B [Ch 50] delayed 70 days by the Administrative Rules Review Committee at its meeting held August 12, 2008. At its meeting held October 14, 2008, the Committee delayed the effective date of 641—50.2(135), definition of "Dental home," until adjournment of the 2009 Session of the General Assembly.

CHAPTER 51
DENTAL SCREENING

641—51.1(135) Purpose. The purpose of the dental screening requirement is to improve the oral health of Iowa's children. Dental screenings will facilitate early detection and referral for treatment of dental disease; reduce the incidence, impact, and cost of dental disease; inform parents and guardians of their children's dental problems; encourage the establishment of effective oral health practices early in life; promote the importance of oral health as an integral component of preparation for school and learning; and contribute to statewide surveillance of oral health. These rules will enhance the I-Smile dental home concepts of prevention, education, care coordination, and treatment to provide a critical step in closing the gap in access to dental care for underserved children.
[**ARC 8980B**, IAB 8/11/10, effective 7/14/10]

641—51.2(135) Definitions. For purposes of this chapter, the following definitions apply:

"Admitting official" means the superintendent of schools or the superintendent's designated representative if a public school; if an accredited nonpublic school, the governing official of the school.

"Applicant" means any person seeking first-time enrollment in kindergarten or ninth grade in a public or accredited nonpublic elementary school or high school in Iowa.

"Dental hygienist" means a person licensed to practice as a dental hygienist.

"Dentist" means a person licensed to practice as a dentist.

"Department" means the Iowa department of public health.

"Electronic signature" means a confidential personalized digital key, code, or number that is used for secure electronic data transmission and that identifies and authenticates the signatory.

"Elementary school" means kindergarten through grade six in an Iowa school district or accredited nonpublic school.

"Gum infection" means that gum (gingival) tissue is red, bleeding, or swollen.

"High school" means grades 9 through 12 in an Iowa school district or accredited nonpublic school.

"Injury" means soft tissue laceration or a broken or dislodged tooth.

"I-Smile" means the department program designed to increase access to dental care for children and to ensure a dental home.

"I-Smile coordinator" means a designated dental hygienist who is employed by or under contract with a local public health agency to administer the I-Smile dental home program.

"Local board of health" means a county, city, or district board of health as defined in Iowa Code section 137.2.

"No obvious problems" means a child's hard and soft tissues appear to be visually healthy and there is no apparent reason for the child to be seen before the next routine dental checkup.

"Nurse" means a person licensed to practice as a registered nurse or advanced registered nurse practitioner.

"Physician" means a person licensed to practice medicine and surgery or osteopathic medicine and surgery.

"Physician assistant" means a person licensed to practice as a physician assistant.

"Recorder" means a dentist, dental hygienist, physician, physician assistant, or nurse who is authorized to record screening information and sign the Certificate of Dental Screening form.

"Requires dental care" means that tooth decay or a white spot lesion is suspected in one or more teeth or that gum infection is suspected.

"Requires urgent dental care" means that obvious tooth decay is present in one or more teeth, there is evidence of injury or severe infection, or the child is experiencing pain.

"Severe infection" means excessive bleeding, swelling, or pus discharge; or an abscess.

"Signature" means an original signature, or authorized use of stamped signature, or electronic signature of a dentist, dental hygienist, physician, physician assistant, or nurse.

"Tooth decay" means a visible cavity or hole in a tooth with brown or black coloration, or a retained root.

"White spot lesion" means a demineralized area of a tooth, usually appearing as a chalky, white spot or white line near the gum line. A white spot lesion is considered an early indicator of tooth decay, especially in primary teeth.
[**ARC 8980B**, IAB 8/11/10, effective 7/14/10]

641—51.3(135) Persons included. The dental screening requirements specified in this chapter apply to all persons seeking first-time enrollment in kindergarten or ninth grade in a public or accredited nonpublic elementary school or high school in Iowa.
[**ARC 8980B**, IAB 8/11/10, effective 7/14/10]

641—51.4(135) Persons excluded. Exclusions to these rules are permitted on an individual basis for religious and financial hardship reasons. Applicants approved for a religious or financial hardship exemption shall submit to the admitting official a valid Iowa department of public health certificate of dental screening exemption.

51.4(1) Religious exemption. A religious exemption may be granted to an applicant if the dental screening conflicts with a genuine and sincere religious belief.

a. The certificate of dental screening exemption for religious reasons shall attest that the dental screening conflicts with a genuine and sincere religious belief and that the belief is in fact religious and not based merely on philosophical, scientific, moral, personal, or medical opposition to dental screenings.

b. The certificate of dental screening exemption for religious reasons shall be signed and dated by the applicant or, if the applicant is a minor, by the parent or guardian.

c. The certificate of dental screening exemption for religious reasons is valid only when notarized.

d. To be valid, the certificate of dental screening exemption for religious reasons shall be the department certificate or a form approved in writing by the department.

51.4(2) Financial hardship exemption. A financial hardship exemption may be granted to an applicant who is unduly burdened by the cost of a dental screening.

a. The certificate of dental screening exemption for financial hardship reasons shall attest that dental screening would cause a genuine financial burden to the applicant.

b. The certificate of dental screening exemption for financial hardship reasons shall be signed and dated by a dentist, dental hygienist, physician, physician assistant, or nurse.

c. The certificate of dental screening exemption for financial hardship reasons shall include the provider type and the provider's name, business address, and telephone number.

d. To be valid, the certificate of dental screening exemption for financial hardship reasons shall be the department certificate or a form approved in writing by the department.

51.4(3) A faxed copy, photocopy, or electronic copy of the valid certificate of dental screening exemption is acceptable.
[**ARC 8980B**, IAB 8/11/10, effective 7/14/10]

641—51.5(135) Dental screening components.

51.5(1) A dental screening is a visual assessment and is noninvasive and nondiagnostic.

51.5(2) Dental instrumentation is not required for a dental screening.

51.5(3) A dental screening can identify obvious or suspected oral health conditions that require or that might require examination by a dentist.

51.5(4) The dental screening shall include the following steps:

a. Visual inspection of the soft tissues, including the lips, cheeks, gums, tongue, floor of mouth, and roof of mouth, to assess infection or injury.

b. Visual inspection of all tooth surfaces to assess tooth decay, white spot lesions, or injury.

c. Documentation of the screening and treatment needs according to 51.9(135).
[**ARC 8980B**, IAB 8/11/10, effective 7/14/10]

641—51.6(135) Dental screening providers.

51.6(1) *Elementary school.* A dental screening for elementary school enrollment shall be performed by a licensed dentist, a licensed dental hygienist, a licensed physician, a licensed physician assistant, or a licensed nurse.

51.6(2) *High school.* A dental screening for high school enrollment shall be provided by a licensed dentist or a licensed dental hygienist.

[**ARC 8980B**, IAB 8/11/10, effective 7/14/10]

641—51.7(135) Time line for valid dental screening.

51.7(1) Elementary school. To be valid, a minimum of one dental screening shall be performed on an applicant no earlier than three years of age but no later than four months after the enrollment date.

51.7(2) High school. To be valid, a minimum of one dental screening shall be performed on an applicant no earlier than one year prior to the enrollment date and no later than four months after the enrollment date.

51.7(3) A dental screening may also be deemed valid by the department if the department determines that the applicant has substantially complied with the dental screening requirements.

[**ARC 8980B**, IAB 8/11/10, effective 7/14/10]

641—51.8(135) Proof of dental screening. The applicant or, if a minor, the parent or guardian of a child enrolled in elementary school or high school shall submit a valid Iowa department of public health certificate of dental screening to the admitting official of the school district or accredited nonpublic elementary school in which the applicant wishes to enroll.

51.8(1) To be valid, the certificate of dental screening shall be the department certificate or a form approved in writing by the department.

a. The Certificate of Dental Screening form is available on the department's Web site at http://www.idph.state.ia.us/hpcdp/oral_health.asp or is available by calling the department at (866)528-4020.

b. The certificate of dental screening shall include all information required by 641—51.9(135).

c. The certificate of dental screening may also be deemed valid by the department if the department determines that the information on the certificate substantially complies with the dental screening requirements.

51.8(2) A faxed copy, photocopy, or electronic copy of the valid certificate of dental screening is acceptable.

[**ARC 8980B**, IAB 8/11/10, effective 7/14/10]

641—51.9(135) Dental screening documentation.

51.9(1) *Student information.* A person authorized to perform a dental screening required by this chapter shall record the following student information or ensure that such information is recorded on the certificate of dental screening provided or approved in writing by the department of public health in cooperation with the department of education:

1. Name (first and last);
2. Birth date;
3. Parent or guardian name;
4. Telephone numbers (home or mobile);
5. Address (street, city, and county);
6. School;
7. Grade level; and
8. Gender.

51.9(2) *Screening information.* A person authorized to perform a dental screening required by this chapter shall record the following screening information on the certificate of dental screening provided or approved in writing by the department of public health in cooperation with the department of education:

1. Date of dental screening;
2. Treatment needs (no obvious problems, requires dental care, requires urgent dental care);

3. Provider type;
4. Provider name, business address, and telephone number; and
5. Provider or recorder signature and credentials.

[**ARC 8980B**, IAB 8/11/10, effective 7/14/10]

641—51.10(135) Assuring dental screening services. Each public and accredited nonpublic school, in collaboration with the department, shall assure that the parent or guardian of a student enrolled in the school has complied with the dental screening requirement. Parents or guardians of students who do not have a valid certificate of dental screening shall be provided with community dental screening referral resources, including contact information for the I-Smile coordinator, the department, or a dental society.
[**ARC 8980B**, IAB 8/11/10, effective 7/14/10]

641—51.11(135) Records. It shall be the duty of the admitting official of an elementary school or a high school to ensure that a valid certificate of dental screening or certificate of dental screening exemption is on file for each child enrolled.

51.11(1) The admitting official shall ensure that all certificates of dental screening are properly completed according to 51.8(135).

51.11(2) The admitting official shall ensure that all certificates of dental screening exemption are properly completed according to 51.4(1) and 51.4(2).

51.11(3) The admitting official shall keep the certificates of dental screening or certificates of dental screening exemption on file at the school in which the applicant is enrolled and assist the applicant or the applicant's parent or guardian in the transfer of the certificate to another school upon the transfer of the applicant to another school.

51.11(4) The local board of health or its designee, the department of education, and the department or its designee shall have the right to have access to the certificates of dental screening and certificates of dental screening exemption of students enrolled in elementary schools and high schools.
[**ARC 8980B**, IAB 8/11/10, effective 7/14/10]

641—51.12(135) Reporting.

51.12(1) It shall be the duty of each local board of health or its designee to audit the certificates of dental screening and certificates of dental screening exemption in the schools within the local board's jurisdiction to determine compliance with 2007 Iowa Acts, chapter 146, and 2008 Iowa Acts, Senate File 2111.

51.12(2) By May 31 annually, each local board of health shall furnish the department with evidence for the preceding school year that each child enrolled in any public or accredited nonpublic school within the local board's jurisdiction met the dental screening requirement.

51.12(3) The evidence shall be in the form of a report that includes:

a. Name of school, and
b. Enrollments by grade, and
c. The number of valid certificates of dental screening by grade, and
d. The number of valid certificates for religious exemptions by grade, and
e. The number of valid certificates for financial hardship exemptions by grade.

[**ARC 8980B**, IAB 8/11/10, effective 7/14/10]

641—51.13(135) Iowa's dental screening database. The department may develop and maintain a statewide dental screening database to ensure that students receive the required dental screening and to monitor oral health.

51.13(1) The database may consist of information from the valid certificates of dental screening and certificates of dental screening exemption, including identifying and demographic data.

51.13(2) The database may be updated, at a minimum, annually.

51.13(3) Database reporting shall comply with 51.13(135).

51.13(4) Restricted uses of database. The database information shall not be used to:

a. Market services to students or nonstudents,

b. Assist in bill collection services, or

c. Locate or identify students or nonstudents for any purpose other than those expressly provided in this rule.

51.13(5) Confidentiality of database information. Dental screening information, including identifying and demographic data maintained in the database, is confidential and may not be disclosed except under the following limited circumstances:

a. The department may release information from the database to the following:

(1) The person who received the dental screening or the parent or guardian of the person who received the dental screening;

(2) Users of the database who complete an agreement with the department that specifies the conditions under which the database can be accessed and who have been issued an identification code or password by the department;

(3) Persons or entities requesting dental screening data in an aggregate form that does not identify an individual either directly or indirectly;

(4) Agencies that complete an agreement with the department which specifies conditions for access to database information and how that information will be used. Agencies shall not use information obtained from the database to market services to students or nonstudents, to assist in bill collection services, or to locate or identify students or nonstudents for any purposes other than those expressly provided in this rule; or

(5) A representative of a state or federal agency, or an entity bound by that state or federal agency, to the extent that the information is necessary to perform a legally authorized function of that agency or the department. The state or federal agency is subject to confidentiality regulations that are the same as or more stringent than those in the state of Iowa. State or federal agencies shall not use information obtained from the database to market services to students or nonstudents, to assist in bill collection services, or to locate or identify students or nonstudents for any purposes other than those expressly provided in this rule.

b. Approved database users shall not release dental screening data except to the person who received the dental screening, the parent or guardian of the person who received the dental screening, health records staff of schools, medical, dental, or health care providers providing continuity of care, and other approved users of the database.

[**ARC 8980B**, IAB 8/11/10, effective 7/14/10]

641—51.14(135) Release of dental screening information.

51.14(1) *Between a dentist, dental hygienist, physician, physician assistant, or nurse, and the elementary school or high school that the child attends.* A dentist, dental hygienist, physician, physician assistant, or nurse shall disclose a student's dental screening information, including the student's name, date of birth, name of parent or guardian, demographic information, the month, day and year of the screening, and the screening results and treatment needs to an elementary school or a high school upon written or verbal request from the elementary school or high school. Written or verbal permission from a student or the student's parent or guardian is not required to release this information to an elementary school or a high school.

51.14(2) *Among dentists, dental hygienists, physicians, physician assistants, or nurses.* Dental screening information, including the student's name, date of birth, name of parent or guardian, demographic information, the month, day and year of the screening, and the screening results and treatment needs shall be provided by one dentist, dental hygienist, physician, physician assistant, or nurse to another health care provider without written or verbal permission from the student or the student's parent or guardian.

[**ARC 8980B**, IAB 8/11/10, effective 7/14/10]

641—51.15(135) Referral requirements. Parents or guardians of students who require dental care or require urgent dental care shall be referred to the parent's or guardian's dentist of choice. Students without a dentist or who have difficulty accessing dental care shall be referred to a local I-Smile

coordinator or local public health agency for assistance with completion of dental care. This assistance may include locating dentists, scheduling appointments, and identifying payment sources.
[**ARC 8980B**, IAB 8/11/10, effective 7/14/10]

641—51.16(135) Provider training. For the purpose of quality assurance and consistency, the department shall make training and training materials available for dental screening providers.
[**ARC 8980B**, IAB 8/11/10, effective 7/14/10]

These rules are intended to implement 2009 Iowa Code Supplement section 135.17 as amended by 2010 Iowa Acts, House File 2144, sections 2 and 3.

[Filed 7/10/08, Notice 5/21/08—published 7/30/08, effective 9/3/08]
[Filed Emergency After Notice ARC 8980B, IAB 8/11/10, effective 7/14/10]

CHAPTERS 52 to 54
Reserved

CHAPTER 55
ADVISORY COUNCIL ON BRAIN INJURIES

[Prior to 9/30/92, see Persons with Disabilities Division[431] Ch 3]

641—55.1(135) Definitions. For the purposes of this chapter, the following definitions shall apply:

"Appointed members" means members of the advisory council on brain injuries who have been appointed by the governor's office.

"Brain injury" means a brain injury as defined in Iowa Code section 135.22.

"Chairperson" means the chairperson of the advisory council on brain injuries, who has been elected by the majority of the council's members.

"Council" means the advisory council on brain injuries.

"Department" means the Iowa department of public health.

"Ex officio members" means designated state agency staff who are statutory members of the advisory council on brain injuries.

"Person from the public" means a person or agency who does not have an affiliation with the advisory council on brain injuries but who has knowledge or skills beneficial to the council for specific task forces or projects.

"Service partners" means representatives of organizations who partner with the Iowa department of public health or the advisory council on brain injuries to carry out activities related to the mission of the council.

[**ARC 9772B**, IAB 10/5/11, effective 11/9/11]

641—55.2(135) Mission of council. The council's mission is to represent individuals with brain injury, their families, and all Iowans through advocacy, education, training, rehabilitation, research and prevention. By means of these efforts, the council brings about awareness to others and serves as a source of hope and healing to survivors of brain injury. The council will accomplish this mission through the following activities:

1. Studying the needs of individuals with brain injury and their families.
2. Making recommendations regarding the planning, development, and administration of a comprehensive statewide service delivery system.
3. Promoting and implementing injury prevention strategies.

[**ARC 9772B**, IAB 10/5/11, effective 11/9/11]

641—55.3(135) Council established. The advisory council on brain injuries, part of the Iowa department of public health, is established pursuant to Iowa Code section 135.22A.

55.3(1) The council shall consist of a minimum of nine appointed members in addition to the ex officio members.

a. The following persons or their designees shall serve as ex officio, nonvoting members of the council:

(1) The director of public health.

(2) The director of human services and any division administrators of the department of human services so assigned by the director.

(3) The director of the department of education.

(4) The chief of the special education bureau of the department of education.

(5) The administrator of the division of vocational rehabilitation services of the department of education.

(6) The director of the department for the blind.

(7) The commissioner of insurance.

b. Appointed members.

(1) Insofar as practicable, the council shall include persons with brain injuries; family members of persons with brain injuries; representatives of industry, labor, business, and agriculture; representatives of federal, state, and local government; and representatives of religious, charitable, fraternal, civic, educational, medical, legal, veteran, welfare, and other professional groups and organizations.

(2) Members shall be appointed to represent every geographic area of the state and shall include members of both sexes.

55.3(2) Appointed members' terms shall be for two years.

55.3(3) Vacancies shall be filled in the same manner in which the original appointments were made for the balance of the unexpired term.

55.3(4) Members whose terms expire may be reappointed.

[**ARC 9772B**, IAB 10/5/11, effective 11/9/11]

641—55.4(135) Officers.

55.4(1) Officers of the council shall be a chairperson, vice-chairperson and immediate past chairperson.

a. The officers shall be elected at the first meeting of each fiscal year.

b. Vacancy in the office of chairperson shall be filled by elevation of the vice-chairperson.

c. Vacancy in the office of vice-chairperson shall be filled by election at the next meeting after the vacancy occurs.

55.4(2) Duties of the officers.

a. The chairperson shall:

(1) Preside at all meetings of the council,

(2) Appoint such task forces as deemed necessary, and

(3) Designate the chairperson of each task force from the appointed members of the council.

b. The vice-chairperson shall:

(1) Perform the duties of the chairperson if the chairperson is absent or unable to act. When so acting, the vice-chairperson shall have all the powers of and be subject to all restrictions upon the chairperson.

(2) Perform such other duties as may be assigned by the chairperson.

c. The immediate past chairperson shall:

(1) Assist the chairperson at the first meeting of the chairperson's appointment.

(2) Perform the duties of the chairperson if the chairperson and vice-chairperson are absent or unable to act. When so acting, the immediate past chairperson shall have all the powers of and be subject to all restrictions upon the chairperson.

(3) Assist with note taking if there is no council staff person available.

(4) Assist the chairperson to identify council business and necessary task force meetings.

55.4(3) The officers shall serve until their successors are appointed.

[**ARC 9772B**, IAB 10/5/11, effective 11/9/11]

641—55.5(135) Duties of the council. The council shall perform the following duties:

55.5(1) Promote meetings and programs for the discussion of methods to reduce the debilitating effects of brain injuries, and disseminate information in cooperation with any other department, agency, or entity on the prevention, evaluation, care, treatment, and rehabilitation of persons affected by brain injuries.

55.5(2) Study and review current prevention, evaluation, care, treatment, and rehabilitation technologies and recommend appropriate preparation, training, retraining, and distribution of personnel and resources in the provision of services to persons with brain injuries through private and public residential facilities, day programs, and other specialized services.

55.5(3) Participate in developing and disseminating criteria and standards which may be required for future funding or licensing of facilities, day programs, and other specialized services for persons with brain injuries in Iowa.

55.5(4) Make recommendations to the governor for developing and administering a state plan to provide services for persons with brain injuries in Iowa.

[**ARC 9772B**, IAB 10/5/11, effective 11/9/11]

641—55.6(135) Meetings.

55.6(1) The council shall meet at least quarterly.

a. The annual meeting schedule shall be established by the beginning of the fiscal year.

b. Meetings will be held the following months: January, April, July and October.

55.6(2) Notice of routine meetings and agenda will be made available to the members a minimum of five working days prior to the meeting.

55.6(3) Meetings may be scheduled as business requires, but notice must be given to members at least five working days prior to the meeting.

55.6(4) All meetings will be held in facilities accessible to and functional for people with physical disabilities.

55.6(5) Notification for reasonable accommodations should be made to department staff at least three working days prior to the meeting.

55.6(6) All meetings are open to the public in accordance with the open meetings law, Iowa Code chapter 21.

55.6(7) Cameras and recording devices may be used at open meetings, provided they do not obstruct the meeting. The presiding officer may request a person using such a device to discontinue its use if it is obstructing the meeting.

55.6(8) The presiding officer may exclude any person from the meeting for repeated behavior that disrupts or obstructs the meeting.

55.6(9) The operation of council meetings will be governed by the following rules of procedure:

a. A simple majority of the appointed members shall constitute a quorum. Motions may not be made without a quorum.

b. When a quorum is present, a motion is carried by affirmative vote of two-thirds of appointed members present.

c. Time for public comment will be made during each council meeting.

55.6(10) Meeting attendance.

a. Council members are expected to be present in person for council meetings with the exception of extenuating circumstances that have been cleared beforehand by the chairperson.

b. Any council member who is unable to attend a meeting will notify council staff at least 24 hours prior to the start of a regularly scheduled meeting. A meeting may be canceled if attendance is expected to be low.

c. If there are extenuating circumstances, a teleconference may be set up for the member to participate in the business portion of the meeting.

d. Appointed members may be recommended for dismissal from the council if they miss more than three meetings annually.

55.6(11) Special meetings. Special meetings shall be for business of the council that cannot wait until the next scheduled meeting.

a. Special meetings may be called by the chairperson to discuss emergent issues within a 24-hour time period.

b. A majority of council members may call a special meeting.

c. Special meetings shall be held in accordance with Iowa Code chapter 21.

55.6(12) Electronic meetings.

a. The council may conduct a meeting by electronic means only in circumstances where such a meeting in person is impossible or impractical, pursuant to Iowa Code section 21.8.

b. Any vote by E-mail shall have the tabulated results presented at the next regular meeting of the council and the ballots retained for a period of six months for confirmation of results.

[**ARC 9772B**, IAB 10/5/11, effective 11/9/11]

641—55.7(135) Minutes. The advisory council shall keep minutes of all its meetings showing the date, time, place, members present, members absent, and the general topics discussed.

55.7(1) The minutes shall reflect the actions agreed upon by the members for topics requiring the members' input or consensus.

55.7(2) If a meeting is convened within a 24-hour time period to discuss emergent issues, the minutes shall reflect the emergent nature of the meeting.

55.7(3) If a meeting is conducted via telephone, the minutes shall reflect the reason for the use of this method of meeting.

55.7(4) The minutes shall be available at the council staff office for inspection Monday through Friday from 8:30 a.m. to 4:30 p.m.

[**ARC 9772B**, IAB 10/5/11, effective 11/9/11]

641—55.8(135) Task forces. The chairperson of the council may establish task forces as needed to carry out the business of the council.

55.8(1) The council will have two standing task forces: the executive task force and the state plan task force.

a. The executive task force shall be made up of the council chairperson, vice-chairperson, immediate past chairperson and chairperson of the state plan task force.

b. The state plan task force shall be made up of members appointed by the chairperson.

55.8(2) The council may designate additional task forces to perform such duties as may be deemed necessary.

55.8(3) Task forces may be composed of appointed members, ex officio members, service partners, and persons from the public.

55.8(4) The chairperson of each task force will be an appointed member of the council.

55.8(5) All members of task forces shall have voting privileges during task force meetings; however, all decisions made by task forces must be approved at the next regular council meeting by a vote of the appointed members.

55.8(6) Task force meetings shall be scheduled at least five working days prior to the meeting.

[**ARC 9772B**, IAB 10/5/11, effective 11/9/11]

641—55.9(135) Expenses of advisory council members. The following may be considered necessary expenses for reimbursement of advisory council members when the expenses are incurred on behalf of advisory council business and are subject to established state reimbursement rates:

1. Reimbursement for travel in a private car.
2. Actual lodging and meal expenses, including sales tax on lodging and meals.
3. Actual expenses of public transportation.

[**ARC 9772B**, IAB 10/5/11, effective 11/9/11]

These rules are intended to implement Iowa Code section 135.22A.

[Filed 5/17/91, Notice 4/3/91—published 6/12/91, effective 7/17/91]

[Filed emergency 9/14/92—published 9/30/92, effective 9/14/92]

[Filed ARC 9772B (Notice ARC 9631B, IAB 7/27/11), IAB 10/5/11, effective 11/9/11]

CHAPTER 56
BRAIN INJURY SERVICES PROGRAM

641—56.1(135) Definitions. For purposes of this chapter, the following definitions apply:

"Assessment" means the review of the consumer's current functioning with regard to the consumer's situation, needs, strengths, abilities, desires and goals.

"Brain injury services waiver" means the state's medical assistance home- and community-based services waiver for persons with brain injury.

"Consumer" means an individual who has applied for and been found eligible to participate in the waiver-eligible component or the cost-share component of the brain injury services program.

"Cost share" means the portion an individual is responsible to pay for services received by the individual.

"Countable income," when determining initial and ongoing eligibility for the brain injury services program, means all earned and unearned income, unless specifically exempted in 441—subrule 86.2(2).

"Department" means the Iowa department of public health.

"Family size," for purposes of establishing initial and ongoing eligibility under the brain injury services program, means all persons living together who are children and who are parents of those children as defined in 441—subrule 86.2(3).

"Program administrator" means the division of behavioral health and professional licensure within the department of public health.

641—56.2(135) Purpose. The purpose of the brain injury services program is to provide services, service funding, or other support for persons with a brain injury under one of the program components established pursuant to Iowa Code section 135.22B. The overall purpose of this chapter is to establish administrative rules in accordance with Iowa Code section 135.22B relative to the financial eligibility requirements for services under the waiver-eligible and cost-share components of the brain injury services program.

641—56.3(135) Waiver-eligible component. Persons eligible for the brain injury services waiver and on the waiting list for the waiver are eligible for the waiver-eligible component. The brain injury services program may provide funding for the nonfederal share of the cost of services if the appropriation for the medical assistance program does not have sufficient funding designated to do so.

56.3(1) Provision of funding under this component is not an entitlement and is subject to funding availability.

56.3(2) A person who receives support under the waiver-eligible component of the brain injury services program is not eligible to receive support under the cost-share component of the program.

641—56.4(135) Cost-share component. Persons determined ineligible for the brain injury services waiver, due to fiscal or functional criteria, or persons who are eligible for the waiver but for whom funding was not authorized or available to provide waiver eligibility are eligible for the cost-share component of the brain injury services program.

56.4(1) An individual must meet all of the following requirements:

a. The individual is aged one month through 64 years.

b. The individual has a diagnosed brain injury as defined in Iowa Code section 135.22.

c. The individual is a resident of Iowa and either a United States citizen or a qualified alien as defined in 8 U.S.C. Section 1641.

d. The individual must meet the cost-share component's financial eligibility requirements and be willing to pay a cost share for the cost-share component.

56.4(2) Cost-share financial eligibility. Countable income shall be used when determining initial and ongoing eligibility for the program. All of the following criteria must be met.

a. Individuals who are at 300 percent or below the federal poverty level for a family of the same size will not be assessed a cost share.

b. Individuals whose countable income is between 301 percent and 350 percent of the federal poverty level for a family of the same size will be assessed a 10 percent cost share for services that will be payable to the service provider.

c. Individuals whose countable income is between 351 percent and 400 percent of the federal poverty level for a family of the same size will be assessed a 20 percent cost share for services that will be payable to the service provider.

d. Individuals whose countable income is above 400 percent of the federal poverty level for a family of the same size will be assessed a 30 percent cost share for services that will be payable to the service provider.

56.4(3) The cost-share component must be the source of last resort for payment; the program shall not pay for services when the provision of those services is mandated by law or administrative rule to be the responsibility of another governmental unit, private agency or program. Brain injury cost-share services are not available to an individual who receives services or funding under any type of medical assistance home- and community-based services waiver.

641—56.5(135) Application process.

56.5(1) The applicant must authorize the department of human services to provide the applicant's brain injury services waiver application materials to the brain injury services program.

56.5(2) The department of human services will provide the department the application materials, which shall include but are not limited to the waiver application and any denial letter, financial assessment, and functional assessment regarding the person in an agreed-upon format.

56.5(3) The department will determine eligibility within 45 days of receipt of complete application materials.

a. After determining if the applicant's service needs fit within the scope of the brain injury services program, the department shall inform the discharge planner or case manager on behalf of the applicant or the applicant's legal representative of the applicant's eligibility.

b. The case manager shall establish an interdisciplinary team for each consumer and, with the team, identify the consumer's plan based on the consumer's needs and desires as well as the availability and appropriateness of services. The case manager shall notify the department of the service plan.

c. The date of eligibility for applicants deemed eligible for the cost-share component will be the date when both the service eligibility and financial eligibility assessments have been completed.

d. Notification of eligibility shall be mailed or given to the applicant or the applicant's legal representative within seven days of the date eligibility determination is completed.

56.5(4) After determining an applicant's eligibility, if no payment slot is available, the brain injury services program shall enter the applicant on a waiting list according to the following:

a. The date a completed Form 470-2927 or 470-2927(S), Health Services Application, is date-stamped in the county department of human services office. If more than one application is received on the same date, applicants shall be entered on the waiting list on the basis of the applicant's month of birth, with January designated as month one.

b. As slots become available, applicants shall be selected from the waiting list based on their order on the waiting list to maintain the number of persons approved for participation in the program.

56.5(5) The consumer or the consumer's legal representative shall complete and sign Iowa department of human services Form 470-3349, Brain Injury Functional Assessment, indicating the consumer's choice of caregiver.

56.5(6) The case manager for the consumer will initiate development of the consumer's service plan and commencement of services. All service plans must be approved by the program administrator.

56.5(7) The department will not pay the cost of services provided to a consumer prior to approval of eligibility.

56.5(8) The program administrator shall make the final determination as to whether program funding will be authorized under the cost-share component.

641—56.6(135) Service providers and reimbursement.

56.6(1) A service provider must either be certified to provide services under the brain injury services waiver or have a contract with a county to provide services and apply to become certified to provide services under the brain injury services waiver within 90 days of the date that services commence.

56.6(2) The reimbursement rate payable for the cost of a service provided under the cost-share component is the rate payable under the medical assistance program. However, if the service provider does not have a medical assistance program reimbursement rate, the rate shall be the amount payable under the county contract.

56.6(3) All service providers must contract with the department and will be paid retroactively to the date of service eligibility.

56.6(4) Service providers will be responsible for billing and collection of any cost share from an individual as determined by the program administrator within the department.

641—56.7(135) Available services/service plan.

56.7(1) Services available shall be consistent with the services offered through the Medicaid home- and community-based services waiver.

56.7(2) Service plans must reflect use of all services, including non-cost-shared services, to ensure that no duplication of services occurs.

56.7(3) All service plans must be submitted, either electronically or in hard-copy format, to the program administrator for approval prior to implementation.

56.7(4) Any change to the service plan must be approved by the program administrator.

641—56.8(135) Redetermination.

56.8(1) A complete financial redetermination of continuing eligibility for the brain injury services program shall be completed annually by the department, after consultation with the case manager and the interdisciplinary team.

56.8(2) A redetermination of continuing eligibility shall also be made when a change in financial or functional circumstances occurs that affects eligibility.

641—56.9(135) Appeal rights. Appeal rights for any individual denied funding under either the waiver-eligible or the cost-share component of the program are as defined in 641—176.8(135,17A) with the following exception: An appeal must be submitted within 45 days of receipt of notification of an adverse decision.

These rules are intended to implement Iowa Code section 135.22B.

[Filed emergency 5/9/07—published 6/6/07, effective 5/9/07]
[Filed 7/13/07, Notice 6/6/07—published 8/1/07, effective 9/5/07]

CHAPTER 57
PLUMBING AND MECHANICAL SYSTEMS BOARD— DECLARATORY ORDERS

641—57.1(17A) Petition for declaratory order. Any person may file a petition with the board for a declaratory order as to the applicability to specified circumstances of a statute, rule, or order within the primary jurisdiction of the board, at Iowa Plumbing and Mechanical Systems Board, Lucas State Office Building, 321 E. 12th Street, Des Moines, Iowa 50319-0075. A petition is deemed filed when it is received by that office. The board shall provide the petitioner with a file-stamped copy of the petition if the petitioner provides the board an extra copy for this purpose. The petition must be typewritten or legibly handwritten in ink and must substantially conform to the following form:

BEFORE THE IOWA PLUMBING AND MECHANICAL SYSTEMS BOARD

Petition by (Name of Petitioner) for a Declaratory Order on (Cite provisions of law involved).	}	PETITION FOR DECLARATORY ORDER

The petition must provide the following information:

1. A clear and concise statement of all relevant facts on which the order is requested.
2. A citation and the relevant language of the specific statutes, rules, policies, decisions, or orders, whose applicability is questioned, and any other relevant law.
3. The questions petitioner wants answered, stated clearly and concisely.
4. The answers to the questions desired by the petitioner and a summary of the reasons urged by the petitioner in support of those answers.
5. The reasons for requesting the declaratory order and disclosure of the petitioner's interest in the outcome.
6. A statement indicating whether the petitioner is currently a party to another proceeding involving the questions at issue and whether, to the petitioner's knowledge, those questions have been decided by, are pending determination by, or are under investigation by, any governmental entity.
7. The names and addresses of other persons, or a description of any class of persons, known by petitioner to be affected by, or interested in, the questions presented in the petition.
8. Any request by petitioner for a meeting provided for by 641—57.7(17A).

The petition must be dated and signed by the petitioner or the petitioner's representative. It must also include the name, mailing address, and telephone number of the petitioner and petitioner's representative and a statement indicating the person to whom communications concerning the petition should be directed.

[**ARC 0454C**, IAB 11/14/12, effective 12/19/12]

641—57.2(17A) Notice of petition. Within 15 days after receipt of a petition for a declaratory order, the board shall give notice of the petition to all persons not served by the petitioner pursuant to 641—57.6(17A) to whom notice is required by any provision of law. The board may also give notice to any other persons.

[**ARC 0454C**, IAB 11/14/12, effective 12/19/12]

641—57.3(17A) Intervention.

57.3(1) Persons who qualify under any applicable provision of law as an intervenor and who file a petition for intervention within 15 days of the filing of a petition for declaratory order shall be allowed to intervene in a proceeding for a declaratory order.

57.3(2) Any person who files a petition for intervention at any time prior to the issuance of an order may be allowed to intervene in a proceeding for a declaratory order at the discretion of the board.

57.3(3) A petition for intervention shall be filed with the Iowa Plumbing and Mechanical Systems Board, Lucas State Office Building, 321 E. 12th Street, Des Moines, Iowa 50319-0075. Such a petition is deemed filed when it is received by that office. The board will provide the petitioner with a file-stamped copy of the petition for intervention if the petitioner provides an extra copy for this purpose. A petition for intervention must be typewritten or legibly handwritten in ink and must substantially conform to the following form:

BEFORE THE IOWA PLUMBING AND MECHANICAL SYSTEMS BOARD

Petition by (Name of Original Petitioner) for a Declaratory Order on (Cite provisions of law cited in original petition).	PETITION FOR INTERVENTION

The petition for intervention must provide the following information:

1. Facts supporting the intervenor's standing and qualifications for intervention.
2. The answers urged by the intervenor to the question or questions presented and a summary of the reasons urged in support of those answers.
3. Reasons for requesting intervention and disclosure of the intervenor's interest in the outcome.
4. A statement indicating whether the intervenor is currently a party to any proceeding involving the questions at issue and whether, to the intervenor's knowledge, those questions have been decided by, are pending determination by, or are under investigation by, any governmental entity.
5. The names and addresses of any additional persons, or a description of any additional class of persons, known by the intervenor to be affected by, or interested in, the questions presented.
6. Whether the intervenor consents to be bound by the determination of the matters presented in the declaratory order proceeding.

The petition must be dated and signed by the intervenor or the intervenor's representative. It must also include the name, mailing address, and telephone number of the intervenor and intervenor's representative, and a statement indicating the person to whom communications should be directed.
[**ARC 0454C**, IAB 11/14/12, effective 12/19/12]

641—57.4(17A) Briefs. The petitioner or any intervenor may file a brief in support of the position urged. The board may request a brief from the petitioner, any intervenor, or any other person concerning the questions raised.
[**ARC 0454C**, IAB 11/14/12, effective 12/19/12]

641—57.5(17A) Inquiries. Inquiries concerning the status of a declaratory order proceeding may be made to the board's executive officer at Iowa Plumbing and Mechanical Systems Board, Lucas State Office Building, 321 E. 12th Street, Des Moines, Iowa 50319-0075.
[**ARC 0454C**, IAB 11/14/12, effective 12/19/12]

641—57.6(17A) Service and filing of petitions and other papers.

57.6(1) *When service required.* Except where otherwise provided by law, every petition for declaratory order, petition for intervention, brief, or other paper filed in a proceeding for a declaratory order shall be served upon each of the parties of record to the proceeding, and on all other persons identified in the petition for declaratory order or petition for intervention as affected by or interested in the questions presented, simultaneously with their filing. The party filing a document is responsible for service on all parties and other affected or interested persons.

57.6(2) *Filing—when required.* All petitions for declaratory orders, petitions for intervention, briefs, or other papers in a proceeding for a declaratory order shall be filed with the Iowa Plumbing and Mechanical Systems Board, Lucas State Office Building, 321 E. 12th Street, Des Moines, Iowa 50319-0075. All petitions, briefs, or other papers that are required to be served upon a party shall be filed simultaneously with the board.

57.6(3) *Method of service, time of filing, and proof of mailing.* Method of service, time of filing, and proof of mailing shall be as provided by 641—33.14(17A).
[**ARC 0454C**, IAB 11/14/12, effective 12/19/12]

641—57.7(17A) Consideration. Upon request by petitioner, the board must schedule a brief and informal meeting between the original petitioner, all intervenors, and the board, a member of the board, or a member of the staff of the board, to discuss the questions raised. The board may solicit comments from any person on the questions raised. Also, comments on the questions raised may be submitted to the board by any person.
[**ARC 0454C**, IAB 11/14/12, effective 12/19/12]

641—57.8(17A) Action on petition.

57.8(1) Within the time allowed by Iowa Code section 17A.9(5), after receipt of a petition for a declaratory order, the board's executive officer or designee shall take action on the petition as required by Iowa Code section 17A.9(5).

57.8(2) The date of issuance of an order or of a refusal to issue an order means the date of mailing of a decision or order or date of delivery if service is by other means unless another date is specified in the order.
[**ARC 0454C**, IAB 11/14/12, effective 12/19/12]

641—57.9(17A) Refusal to issue order.

57.9(1) The board shall not issue a declaratory order where prohibited by Iowa Code section 17A.9(1), and may refuse to issue a declaratory order on some or all questions raised for the following reasons:

1. The petition does not substantially comply with the required form.
2. The petition does not contain facts sufficient to demonstrate that the petitioner will be aggrieved or adversely affected by the failure of the board to issue an order.
3. The board does not have jurisdiction over the questions presented in the petition.
4. The questions presented by the petition are also presented in a current rule making, contested case, or other agency or judicial proceeding, that may definitively resolve them.
5. The questions presented by the petition would more properly be resolved in a different type of proceeding or by another body with jurisdiction over the matter.
6. The facts or questions presented in the petition are unclear, overbroad, insufficient, or otherwise inappropriate as a basis upon which to issue an order.
7. There is no need to issue an order because the questions raised in the petition have been settled due to a change in circumstances.
8. The petition is not based upon facts calculated to aid in the planning of future conduct but is, instead, based solely upon prior conduct in an effort to establish the effect of that conduct or to challenge a board decision already made.
9. The petition requests a declaratory order that would necessarily determine the legal rights, duties, or responsibilities of other persons who have not joined in the petition, intervened separately, or filed a similar petition and whose position on the questions presented may fairly be presumed to be adverse to that of petitioner.
10. The petitioner requests the board to determine whether a statute is unconstitutional on its face.

57.9(2) A refusal to issue a declaratory order must indicate the specific grounds for the refusal and constitutes final agency action on the petition.

57.9(3) Refusal to issue a declaratory order pursuant to this provision does not preclude the filing of a new petition that seeks to eliminate the grounds for the refusal to issue an order.
[**ARC 0454C**, IAB 11/14/12, effective 12/19/12]

641—57.10(17A) Contents of declaratory order—effective date. In addition to the order itself, a declaratory order must contain the date of its issuance, the name of petitioner and all intervenors, the

specific statutes, rules, policies, decisions, or orders involved, the particular facts upon which it is based, and the reasons for its conclusion. A declaratory order is effective on the date of issuance.
[**ARC 0454C**, IAB 11/14/12, effective 12/19/12]

641—57.11(17A) Copies of orders. A copy of all orders issued in response to a petition for a declaratory order shall be mailed promptly to the original petitioner and all intervenors.
[**ARC 0454C**, IAB 11/14/12, effective 12/19/12]

641—57.12(17A) Effect of a declaratory order. A declaratory order has the same status and binding effect as a final order issued in a contested case proceeding. It is binding on the board, the petitioner, and any intervenors (who consent to be bound) and is applicable only in circumstances where the relevant facts and the law involved are indistinguishable from those on which the order was based. As to all other persons, a declaratory order serves only as precedent and is not binding on the board. The issuance of a declaratory order constitutes final agency action on the petition.
[**ARC 0454C**, IAB 11/14/12, effective 12/19/12]

These rules are intended to implement Iowa Code section 17A.9.

[Filed ARC 0454C (Notice ARC 0315C, IAB 9/5/12), IAB 11/14/12, effective 12/19/12]

CHAPTER 58
PLUMBING AND MECHANICAL SYSTEMS BOARD— AGENCY PROCEDURE FOR RULE MAKING

641—58.1(17A) Applicability. Except to the extent otherwise expressly provided by statute, all rules adopted by the board are subject to the provisions of Iowa Code chapter 17A, the Iowa administrative procedure Act, and the provisions of this chapter.
[**ARC 0456C**, IAB 11/14/12, effective 12/19/12]

641—58.2(17A) Advice on possible rules before notice of proposed rule adoption. In addition to seeking information by other methods, the board may, before publication of a Notice of Intended Action under Iowa Code section 17A.4(1)*"a,"* solicit comments from the public on a subject matter of possible rule making by the board by causing notice to be published in the Iowa Administrative Bulletin of the subject matter and indicating where, when, and how persons may comment.
[**ARC 0456C**, IAB 11/14/12, effective 12/19/12]

641—58.3(17A) Public rule-making docket.

58.3(1) *Docket maintained.* The board shall maintain a current public rule-making docket.

58.3(2) *Anticipated rule making.* The rule-making docket shall list each anticipated rule-making proceeding. A rule-making proceeding is deemed "anticipated" from the time a draft of proposed rules is distributed for internal discussion within the board. For each anticipated rule-making proceeding the docket shall contain a listing of the precise subject matter which may be submitted for consideration by the board for subsequent proposal under the provisions of Iowa Code section 17A.4(1)*"a,"* the name and address of board personnel with whom persons may communicate with respect to the matter, and an indication of the present status within the board of that possible rule. The board may also include in the docket other subjects upon which public comment is desired.

58.3(3) *Pending rule-making proceedings.* The rule-making docket shall list each pending rule-making proceeding. A rule-making proceeding is pending from the time it is commenced, by publication in the Iowa Administrative Bulletin of a Notice of Intended Action pursuant to Iowa Code section 17A.4(1)*"a,"* to the time it is terminated, by publication of a Notice of Termination in the Iowa Administrative Bulletin or the rule becoming effective. For each rule-making proceeding, the docket shall indicate:

a. The subject matter of the proposed rule;

b. A citation to all published notices relating to the proceeding;

c. Where written submissions on the proposed rule may be inspected;

d. The time during which written submissions may be made;

e. The names of persons who have made written requests for an opportunity to make oral presentations on the proposed rule, where those requests may be inspected, and where and when oral presentations may be made;

f. Whether a written request for the issuance of a regulatory analysis, or a concise statement of reasons, has been filed, whether such an analysis or statement or a fiscal impact statement has been issued, and where any such written request, analysis, or statement may be inspected;

g. The current status of the proposed rule and any board determinations with respect thereto;

h. Any known timetable for board decisions or other action in the proceeding;

i. The date of the rule's adoption;

j. The date of the rule's filing, indexing, and publication;

k. The date on which the rule will become effective; and

l. Where the rule-making record may be inspected.

[**ARC 0456C**, IAB 11/14/12, effective 12/19/12]

641—58.4(17A) Notice of proposed rule making.

58.4(1) *Contents.* At least 35 days before the adoption of a rule, the board shall cause Notice of Intended Action to be published in the Iowa Administrative Bulletin. The Notice of Intended Action shall include:

a. A brief explanation of the purpose of the proposed rule;

b. The specific legal authority for the proposed rule;

c. Except to the extent impracticable, the text of the proposed rule;

d. Where, when, and how persons may present their views on the proposed rule; and

e. Where, when, and how persons may demand an oral proceeding on the proposed rule if the notice does not already provide for one.

Where inclusion of the complete text of a proposed rule in the Notice of Intended Action is impracticable, the board shall include in the notice a statement fully describing the specific subject matter of the omitted portion of the text of the proposed rule, the specific issues to be addressed by that omitted text of the proposed rule, and the range of possible choices being considered by the board for the resolution of each of those issues.

58.4(2) *Incorporation by reference.* A proposed rule may incorporate other materials by reference only if it complies with all of the requirements applicable to the incorporation by reference of other materials in an adopted rule that are contained in subrule 58.12(2) of this chapter.

58.4(3) *Copies of notices.* Persons desiring to receive copies of future Notices of Intended Action by subscription must file with the board a written request indicating the name and address to which such notices should be sent. Within seven days after submission of a Notice of Intended Action to the administrative rules coordinator for publication in the Iowa Administrative Bulletin, the board shall mail or electronically transmit a copy of that notice to subscribers who have filed a written request for either mailing or electronic transmittal with the board for Notices of Intended Action. The written request shall be accompanied by payment of the subscription price which may cover the full cost of the subscription service, including its administrative overhead and the cost of copying and mailing the Notices of Intended Action for a period of one calendar year.

[**ARC 0456C**, IAB 11/14/12, effective 12/19/12]

641—58.5(17A) Public participation.

58.5(1) *Written comments.* For at least 20 days after publication of the Notice of Intended Action, persons may submit argument, data, and views, in writing, on the proposed rule. Such written submissions should identify the proposed rule to which they relate and should be submitted to Iowa Plumbing and Mechanical Systems Board, Lucas State Office Building, 321 E. 12th Street, Des Moines, Iowa 50319-0075, or the person designated in the Notice of Intended Action.

58.5(2) *Oral proceedings.* The board may, at any time, schedule an oral proceeding on a proposed rule. The board shall schedule an oral proceeding on a proposed rule if, within 20 days after the published Notice of Intended Action, a written request for an opportunity to make oral presentations is submitted to the board by the administrative rules review committee, a governmental subdivision, an agency, an association having not less than 25 members, or at least 25 persons. That request must also contain the following additional information:

1. A request by one or more individual persons must be signed by each of them and include the address and telephone number of each of them.

2. A request by an association must be signed by an officer or designee of the association and must contain a statement that the association has at least 25 members and the address and telephone number of the person signing that request.

3. A request by an agency or governmental subdivision must be signed by an official having authority to act on behalf of the entity and must contain the address and telephone number of the person signing that request.

58.5(3) *Conduct of oral proceedings.*

a. Applicability. This subrule applies only to those oral rule-making proceedings in which an opportunity to make oral presentations is authorized or required by Iowa Code section 17A.4(1)*"b"* or this chapter.

b. Scheduling and notice. An oral proceeding on a proposed rule may be held in one or more locations and shall not be held earlier than 20 days after notice of its location and time is published in the Iowa Administrative Bulletin. That notice shall also identify the proposed rule by ARC number and citation to the Iowa Administrative Bulletin.

c. Presiding officer. The board, a member of the board, or another person designated by the board who will be familiar with the substance of the proposed rule, shall preside at the oral proceeding on a proposed rule. If the board does not preside, the presiding officer shall prepare a memorandum for consideration by the board summarizing the contents of the presentations made at the oral proceeding unless the board determines that such a memorandum is unnecessary because the board will personally listen to or read the entire transcript of the oral proceeding.

d. Conduct of proceeding. At an oral proceeding on a proposed rule, persons may make oral statements and make documentary and physical submissions, which may include data, views, comments or arguments concerning the proposed rule. Persons wishing to make oral presentations at such a proceeding are encouraged to notify the board at least one business day prior to the proceeding and indicate the general subject of their presentations. At the proceeding, those who participate shall indicate their names and addresses, identify any persons or organizations they may represent, and provide any other information relating to their participation deemed appropriate by the presiding officer. Oral proceedings shall be open to the public and shall be recorded by stenographic or electronic means.

(1) At the beginning of the oral proceeding, the presiding officer shall give a brief synopsis of the proposed rule, a statement of the statutory authority for the proposed rule, and the reasons for the board decision to propose the rule. The presiding officer may place time limitations on individual oral presentations when necessary to ensure the orderly and expeditious conduct of the oral proceeding. To encourage joint oral presentations and to avoid repetition, additional time may be provided for persons whose presentations represent the views of other individuals as well as their own views.

(2) Persons making oral presentations are encouraged to avoid restating matters which have already been submitted in writing.

(3) To facilitate the exchange of information, the presiding officer may, where time permits, open the floor to questions or general discussion.

(4) The presiding officer shall have the authority to take any reasonable action necessary for the orderly conduct of the meeting.

(5) Physical and documentary submissions presented by participants in the oral proceeding shall be submitted to the presiding officer. Such submissions become the property of the board.

(6) The oral proceeding may be continued by the presiding officer to a later time without notice other than by announcement at the hearing.

(7) Participants in an oral proceeding shall not be required to take an oath or to submit to cross-examination. However, the presiding officer in an oral proceeding may question participants and permit the questioning of participants by other participants about any matter relating to that rule-making proceeding, including any prior written submissions made by those participants in that proceeding; but no participant shall be required to answer any question.

(8) The presiding officer in an oral proceeding may permit rebuttal statements and request the filing of written statements subsequent to the adjournment of the oral presentations.

58.5(4) *Additional information.* In addition to receiving written comments and oral presentations on a proposed rule according to the provisions of this rule, the board may obtain information concerning a proposed rule through any other lawful means deemed appropriate under the circumstances.

58.5(5) *Accessibility.* The board shall schedule oral proceedings in rooms accessible to and functional for persons with physical disabilities. Persons who have special requirements should contact the board's executive officer at (515)281-6881 in advance to arrange access or other needed services.

[**ARC 0456C**, IAB 11/14/12, effective 12/19/12]

641—58.6(17A) Regulatory analysis.

58.6(1) *Definition of small business.* A "small business" is defined in Iowa Code section 17A.4A(8).

58.6(2) *Mailing list.* Small businesses or organizations of small businesses may be registered on the board's small business impact list by making a written application addressed to: Iowa Plumbing and Mechanical Systems Board, Lucas State Office Building, 321 E. 12th Street, Des Moines, Iowa 50319-0075. The application for registration shall state:

a. The name of the small business or organization of small businesses;

b. Its address;

c. The name of a person authorized to transact business for the applicant;

d. A description of the applicant's business or organization. An organization representing 25 or more persons who qualify as a small business shall indicate that fact.

e. Whether the registrant desires copies of Notices of Intended Action at cost, or desires advance notice of the subject of all or some specific category of proposed rule making affecting small business.

The board may at any time request additional information from the applicant to determine whether the applicant is qualified as a small business or as an organization of 25 or more small businesses. The board may periodically send a letter to each registered small business or organization of small businesses asking whether that business or organization wishes to remain on the registration list. The name of a small business or organization of small businesses will be removed from the list if a negative response is received, or if no response is received within 30 days after the letter is sent.

58.6(3) *Time of mailing.* Within seven days after submission of a Notice of Intended Action to the administrative rules coordinator for publication in the Iowa Administrative Bulletin, the board shall mail to all registered small businesses or organizations of small businesses, in accordance with their request, either a copy of the Notice of Intended Action or notice of the subject of that proposed rule making. In the case of a rule that may have an impact on small business adopted in reliance upon Iowa Code section 17A.4(3), the board shall mail notice of the adopted rule to registered businesses or organizations prior to the time the adopted rule is published in the Iowa Administrative Bulletin.

58.6(4) *Qualified requesters for regulatory analysis—economic impact.* The board shall issue a regulatory analysis of a proposed rule that conforms to the requirements of Iowa Code section 17A.4A(2)*"a"* after a proper request from:

a. The administrative rules coordinator;

b. The administrative rules review committee.

58.6(5) *Qualified requesters for regulatory analysis—business impact.* The board shall issue a regulatory analysis of a proposed rule that conforms to the requirements of Iowa Code section 17A.4A(2)*"b"* after a proper request from:

a. The administrative rules review committee;

b. The administrative rules coordinator;

c. At least 25 or more persons who sign the request provided that each represents a different small business;

d. An organization representing at least 25 small businesses. That organization shall list the name, address and telephone number of not less than 25 small businesses it represents.

58.6(6) *Time period for analysis.* Upon receipt of a timely request for a regulatory analysis, the board shall adhere to the time lines described in Iowa Code sections 17A.4A(4) and 17A.4A(5).

58.6(7) *Contents of request.* A request for a regulatory analysis is made when it is mailed or delivered to the board. The request shall be in writing and satisfy the requirements of Iowa Code section 17A.4A.

58.6(8) *Contents of concise summary.* The contents of the concise summary shall conform to the requirements of Iowa Code section 17A.4A.

58.6(9) *Publication of a concise summary.* The board shall make available, to the maximum extent feasible, copies of the published summary in conformance with Iowa Code section 17A.4A.

58.6(10) *Regulatory analysis contents—rules review committee or rules coordinator.* When a regulatory analysis is issued in response to a written request from the administrative rules review committee, or the administrative rules coordinator, the regulatory analysis shall conform to the

requirements of Iowa Code section 17A.4A(2)*"a,"* unless a written request expressly waives one or more of the items listed in the section.

58.6(11) *Regulatory analysis contents—substantial impact on small business.* When a regulatory analysis is issued in response to a written request from the administrative rules review committee, the administrative rules coordinator, at least 25 persons signing that request who each qualify as a small business or by an organization representing at least 25 small businesses, the regulatory analysis shall conform to the requirements of Iowa Code section 17A.4A(2)*"b."*
[**ARC 0456C**, IAB 11/14/12, effective 12/19/12]

641—58.7(17A) Fiscal impact statement.

58.7(1) A proposed rule that mandates additional combined expenditures exceeding $100,000 by all affected political subdivisions or agencies and entities which contract with political subdivisions to provide services must be accompanied by a fiscal impact statement outlining the costs associated with the rule. A fiscal impact statement must satisfy the requirements of Iowa Code section 25B.6.

58.7(2) If the board determines at the time it adopts a rule that the fiscal impact statement upon which the rule is based contains errors, the board shall, at the same time, issue a corrected fiscal impact statement and publish the corrected fiscal impact statement in the Iowa Administrative Bulletin.
[**ARC 0456C**, IAB 11/14/12, effective 12/19/12]

641—58.8(17A) Time and manner of rule adoption.

58.8(1) *Time of adoption.* The board shall not adopt a rule until the period for making written submissions and oral presentations has expired. Within 180 days after the later of the publication of the Notice of Intended Action, or the end of oral proceedings thereon, the board shall adopt a rule pursuant to the rule-making proceeding or terminate the proceeding by publication of a notice to that effect in the Iowa Administrative Bulletin.

58.8(2) *Consideration of public comment.* Before the adoption of a rule, the board shall consider fully all of the written submissions and oral submissions received in that rule-making proceeding or any memorandum summarizing such oral submissions, and any regulatory analysis or fiscal impact statement issued in that rule-making proceeding.

58.8(3) *Reliance on board expertise.* Except as otherwise provided by law, the board may use its own experience, technical competence, specialized knowledge, and judgment in the adoption of a rule.
[**ARC 0456C**, IAB 11/14/12, effective 12/19/12]

641—58.9(17A) Variance between adopted rule and published notice of proposed rule adoption.

58.9(1) The board shall not adopt a rule that differs from the rule proposed in the Notice of Intended Action on which the rule is based unless:

a. The differences are within the scope of the subject matter announced in the Notice of Intended Action and are in character with the issues raised in that notice; and

b. The differences are a logical outgrowth of the contents of that Notice of Intended Action and the comments submitted in response thereto; and

c. The Notice of Intended Action provided fair warning that the outcome of that rule-making proceeding could be the rule in question.

58.9(2) In determining whether the Notice of Intended Action provided fair warning that the outcome of that rule-making proceeding could be the rule in question, the board shall consider the following factors:

a. The extent to which persons who will be affected by the rule should have understood that the rule-making proceeding on which it is based could affect their interests;

b. The extent to which the subject matter of the rule or the issues determined by the rule are different from the subject matter or issues contained in the Notice of Intended Action; and

c. The extent to which the effects of the rule differ from the effects of the proposed rule contained in the Notice of Intended Action.

58.9(3) The board shall commence a rule-making proceeding within 60 days of its receipt of a petition for rule making seeking the amendment or repeal of a rule that differs from the proposed rule

contained in the Notice of Intended Action upon which the rule is based, unless the board finds that the differences between the adopted rule and the proposed rule are so insubstantial as to make such a rule-making proceeding wholly unnecessary. A copy of any such finding and the petition to which it responds shall be sent to petitioner, the administrative rules coordinator, and the administrative rules review committee, within three days of its issuance.

58.9(4) Concurrent rule-making proceedings. Nothing in this rule disturbs the discretion of the board to initiate, concurrently, several different rule-making proceedings on the same subject with several different published Notices of Intended Action.

[**ARC 0456C**, IAB 11/14/12, effective 12/19/12]

641—58.10(17A) Exemptions from public rule-making procedures.

58.10(1) *Omission of notice and comment.* To the extent the board for good cause finds that public notice and participation are unnecessary, impracticable, or contrary to the public interest in the process of adopting a particular rule, the board may adopt that rule without publishing advance Notice of Intended Action in the Iowa Administrative Bulletin and without providing for written or oral public submissions prior to its adoption. The board shall incorporate the required finding and a brief statement of its supporting reasons in each rule adopted in reliance upon this subrule.

58.10(2) *Categories exempt.* The following narrowly tailored categories of rules are exempted from the usual public notice and participation requirements because those requirements are unnecessary, impracticable, or contrary to the public interest with respect to each and every member of the defined class: rules mandated by either state or federal law.

58.10(3) *Public proceedings on rules adopted without them.* The board may, at any time, commence a standard rule-making proceeding for the adoption of a rule that is identical or similar to a rule it adopts in reliance upon subrule 58.10(1). Upon written petition by a governmental subdivision, the administrative rules review committee, an agency, the administrative rules coordinator, an association having not less than 25 members, or at least 25 persons, the board shall commence a standard rule-making proceeding for any rule specified in the petition that was adopted in reliance upon subrule 58.10(1). Such a petition must be filed within one year of the publication of the specified rule in the Iowa Administrative Bulletin as an adopted rule. The rule-making proceeding on that rule must be commenced within 60 days of the receipt of such a petition. After a standard rule-making proceeding commenced pursuant to this subrule, the board may either readopt the rule it adopted without benefit of all usual procedures on the basis of subrule 58.10(1), or may take any other lawful action, including the amendment or repeal of the rule in question, with whatever further proceedings are appropriate.

[**ARC 0456C**, IAB 11/14/12, effective 12/19/12]

641—58.11(17A) Concise statement of reasons.

58.11(1) *General.* When requested by a person, either prior to the adoption of a rule or within 30 days after its publication in the Iowa Administrative Bulletin as an adopted rule, the board shall issue a concise statement of reasons for the rule. Requests for such a statement must be in writing and be delivered to Iowa Plumbing and Mechanical Systems Board, Lucas State Office Building, 321 E. 12th Street, Des Moines, Iowa 50319-0075. The request should indicate whether the statement is sought for all or only a specified part of the rule. Requests will be considered made on the date received.

58.11(2) *Contents.* The concise statement of reasons shall contain:

a. The reasons for adopting the rule;

b. An indication of any change between the text of the proposed rule contained in the published Notice of Intended Action and the text of the rule as finally adopted, with the reasons for any such change;

c. The principal reasons urged in the rule-making proceeding for and against the rule, and the board's reasons for overruling the arguments made against the rule.

58.11(3) *Time of issuance.* After a proper request, the board shall issue a concise statement of reasons by the later of the time the rule is adopted or 35 days after receipt of the request.

[**ARC 0456C**, IAB 11/14/12, effective 12/19/12]

641—58.12(17A) Contents, style, and form of rule.

58.12(1) *Contents.* Each rule adopted by the board shall contain the text of the rule and, in addition:

a. The date the board adopted the rule;

b. A brief explanation of the principal reasons for the rule-making action if such reasons are required by Iowa Code section 17A.4(2) or the board in its discretion decides to include such reasons;

c. A reference to all rules repealed, amended, or suspended by the rule;

d. A reference to the specific statutory or other authority authorizing adoption of the rule;

e. Any findings required by any provision of law as a prerequisite to adoption or effectiveness of the rule;

f. A brief explanation of the principal reasons for the failure to provide for waivers to the rule if no waiver provision is included and a brief explanation of any waiver or special exceptions provided in the rule if such reasons are required by Iowa Code section 17A.4(2) or the board in its discretion decides to include such reasons; and

g. The effective date of the rule.

58.12(2) *Incorporation by reference.* The board may incorporate by reference in a proposed or adopted rule, and without causing publication of the incorporated matter in full, all or any part of a code, standard, rule, or other matter if the board finds that the incorporation of its text in the board proposed or adopted rule would be unduly cumbersome, expensive, or otherwise inexpedient. The reference in the board proposed or adopted rule shall fully and precisely identify the incorporated matter by location, title, citation, date, and edition, if any; shall briefly indicate the precise subject and the general contents of the incorporated matter; and shall state that the proposed or adopted rule does not include any later amendments or editions of the incorporated matter. The board may incorporate such matter by reference in a proposed or adopted rule only if the board makes copies of it readily available to the public. The rule shall state how and where copies of the incorporated matter may be obtained at cost from this board, and how and where copies may be obtained from the agency of the United States, this state, another state, or the organization, association, or persons, originally issuing that matter. The board shall retain permanently a copy of any materials incorporated by reference in a rule of the board.

If the board adopts standards by reference to another publication, it shall provide a copy of the publication containing the standards to the administrative rules coordinator for deposit in the state law library and may make the standards available electronically.

58.12(3) *References to materials not published in full.* When the administrative code editor decides to omit the full text of a proposed or adopted rule because publication of the full text would be unduly cumbersome, expensive, or otherwise inexpedient, the board shall prepare and submit to the administrative code editor for inclusion in the Iowa Administrative Bulletin and Iowa Administrative Code a summary statement describing the specific subject matter of the omitted material. This summary statement shall include the title and a brief description sufficient to inform the public of the specific nature and subject matter of the proposed or adopted rules, and of significant issues involved in these rules. The summary statement shall also describe how a copy of the full text of the proposed or adopted rule, including any unpublished matter and any matter incorporated by reference, may be obtained from the board. The board will provide a copy of that full text (at actual cost) upon request and shall make copies of the full text available for review at the state law library and may make the standards available electronically.

At the request of the administrative code editor, the board shall provide a proposed statement explaining why publication of the full text would be unduly cumbersome, expensive, or otherwise inexpedient.

58.12(4) *Style and form.* In preparing its rules, the board shall follow the uniform numbering system, form, and style prescribed by the administrative rules coordinator.

[**ARC 0456C**, IAB 11/14/12, effective 12/19/12]

641—58.13(17A) Agency rule-making record.

58.13(1) *Requirement.* The board shall maintain an official rule-making record for each rule it proposes by publication in the Iowa Administrative Bulletin of a Notice of Intended Action, or adopts. The rule-making record and materials incorporated by reference must be available for public inspection.

58.13(2) *Contents.* The board rule-making record shall contain:

a. Copies of all publications in the Iowa Administrative Bulletin with respect to the rule or the proceeding upon which the rule is based and any file-stamped copies of board submissions to the administrative rules coordinator concerning that rule or the proceeding upon which it is based;

b. Copies of any portions of the board's public rule-making docket containing entries relating to the rule or the proceeding upon which the rule is based;

c. All written petitions, requests, and submissions received by the board, and all other written materials of a factual nature as distinguished from opinion that are relevant to the merits of the rule and that were created or compiled by the board and considered by the board, in connection with the formulation, proposal, or adoption of the rule or the proceeding upon which the rule is based, except to the extent the board is authorized by law to keep them confidential; provided, however, that when any such materials are deleted because they are authorized by law to be kept confidential, the board shall identify in the record the particular materials deleted and state the reasons for that deletion;

d. Any official transcript of oral presentations made in the proceeding upon which the rule is based or, if not transcribed, the stenographic record or electronic recording of those presentations, and any memorandum prepared by a presiding officer summarizing the contents of those presentations;

e. A copy of any regulatory analysis or fiscal impact statement prepared for the proceeding upon which the rule is based;

f. A copy of the rule and any concise statement of reasons prepared for that rule;

g. All petitions for amendment or repeal or suspension of the rule;

h. A copy of any objection to the issuance of that rule without public notice and participation that was filed pursuant to Iowa Code section 17A.4(3) by the administrative rules review committee, the governor, or the attorney general;

i. A copy of any objection to the rule filed by the administrative rules review committee, the governor, or the attorney general pursuant to Iowa Code section 17A.4(6), and any board response to that objection;

j. A copy of any significant written criticism of the rule, including a summary of any petitions for waiver of the rule; and

k. A copy of any executive order concerning the rule.

58.13(3) *Effect of record.* Except as otherwise required by a provision of law, the board rule-making record required by this rule need not constitute the exclusive basis for board action on that rule.

58.13(4) *Maintenance of record.* The board shall maintain the rule-making record for a period of not less than five years from the later of the date the rule to which it pertains became effective, the date of the Notice of Intended Action, or the date of any written criticism as described in 58.13(2)*"g," "h," "i,"* or *"j."*

[**ARC 0456C**, IAB 11/14/12, effective 12/19/12]

641—58.14(17A) Filing of rules. The board shall file each rule it adopts in the office of the administrative rules coordinator. The filing must be executed as soon after adoption of the rule as is practicable. At the time of filing, each rule must have attached to it any fiscal impact statement and any concise statement of reasons that was issued with respect to that rule. If a fiscal impact statement or statement of reasons for that rule was not issued until a time subsequent to the filing of that rule, the note or statement must be attached to the filed rule within five working days after the note or statement is issued. In filing a rule, the board shall use the standard form prescribed by the administrative rules coordinator.

[**ARC 0456C**, IAB 11/14/12, effective 12/19/12]

641—58.15(17A) Effectiveness of rules prior to publication.

58.15(1) *Grounds.* The board may make a rule effective after its filing at any stated time prior to 35 days after its indexing and publication in the Iowa Administrative Bulletin if it finds that a statute so provides, the rule confers a benefit or removes a restriction on some segment of the public, or that the effective date of the rule is necessary to avoid imminent peril to the public health, safety, or welfare. The board shall incorporate the required finding and a brief statement of its supporting reasons in each rule adopted in reliance upon this subrule.

58.15(2) *Special notice.* When the board makes a rule effective prior to its indexing and publication in reliance upon the provisions of Iowa Code section 17A.5(2)*"b"*(3), the board shall employ all reasonable efforts to make its contents known to the persons who may be affected by that rule prior to the rule's indexing and publication. The term "all reasonable efforts" requires the board to employ the most effective and prompt means of notice rationally calculated to inform potentially affected parties of the effectiveness of the rule that is justified and practical under the circumstances considering the various alternatives available for this purpose, the comparative costs to the board of utilizing each of those alternatives, and the harm suffered by affected persons from any lack of notice concerning the contents of the rule prior to its indexing and publication. The means that may be used for providing notice of such rules prior to their indexing and publication include, but are not limited to, any one or more of the following means: radio, newspaper, television, signs, mail, telephone, personal notice or electronic means.

A rule made effective prior to its indexing and publication in reliance upon the provisions of Iowa Code section 17A.5(2)*"b"*(3) shall include in that rule a statement describing the reasonable efforts that will be used to comply with the requirements of subrule 58.15(2).

[**ARC 0456C**, IAB 11/14/12, effective 12/19/12]

641—58.16(17A) General statements of policy.

58.16(1) *Compilation, indexing, public inspection.* The board shall maintain an official, current, and dated compilation that is indexed by subject, containing all of its general statements of policy within the scope of Iowa Code section 17A.2(11)*"a," "c," "f," "g," "h," "k."* Each addition to, change in, or deletion from the official compilation must also be dated, indexed, and a record thereof kept. Except for those portions containing rules governed by Iowa Code section 17A.2(11)*"f,"* or otherwise authorized by law to be kept confidential, the compilation must be made available for public inspection and copying.

58.16(2) *Enforcement of requirements.* A general statement of policy subject to the requirements of this rule shall not be relied on by the board to the detriment of any person who does not have actual, timely knowledge of the contents of the statement until the requirements of subrule 58.16(1) are satisfied. This provision is inapplicable to the extent necessary to avoid imminent peril to the public health, safety, or welfare.

[**ARC 0456C**, IAB 11/14/12, effective 12/19/12]

641—58.17(17A) Review by agency of rules.

58.17(1) Any interested person, association, agency, or political subdivision may submit a written request to the administrative rules coordinator requesting the board to conduct a formal review of a specified rule. Upon approval of that request by the administrative rules coordinator, the board shall conduct a formal review of a specified rule to determine whether a new rule should be adopted instead or the rule should be amended or repealed. The board may refuse to conduct a review if it has conducted such a review of the specified rule within five years prior to the filing of the written request.

58.17(2) In conducting the formal review, the board shall prepare within a reasonable time a written report summarizing its findings, its supporting reasons, and any proposed course of action. The report must include a concise statement of the board's findings regarding the rule's effectiveness in achieving its objectives, including a summary of any available supporting data. The report shall also concisely describe significant written criticisms of the rule received during the previous five years, including a summary of any petitions for waiver of the rule received by the board or granted by the board. The report shall describe alternative solutions to resolve the criticisms of the rule, the reasons any were rejected, and any changes made in the rule in response to the criticisms as well as the reasons for the changes. A copy

of the board's report shall be sent to the administrative rules review committee and the administrative rules coordinator. The report must also be available for public inspection.

[**ARC 0456C**, IAB 11/14/12, effective 12/19/12]

These rules are intended to implement Iowa Code section 17A.4.

[Filed ARC 0456C (Notice ARC 0316C, IAB 9/5/12), IAB 11/14/12, effective 12/19/12]

CHAPTER 59
PLUMBING AND MECHANICAL SYSTEMS BOARD—FAIR INFORMATION PRACTICES AND PUBLIC RECORDS

641—59.1(17A,22) Definitions. As used in this chapter:

"Agency" or *"board"* means the Iowa plumbing and mechanical systems board.

"Confidential record" means a record which is not available as a matter of right for examination and copying by members of the public under applicable provisions of law. Confidential records include records or information contained in records that the board is prohibited by law from making available for examination by members of the public, and records or information contained in records that are specified as confidential by Iowa Code section 22.7, or other provision of law, but that may be disclosed upon order of a court, the lawful custodian of the record, or by another person duly authorized to release the record. Mere inclusion in a record of information declared confidential by an applicable provision of law does not necessarily make that entire record a confidential record.

"Custodian" means the board, or a person lawfully delegated authority by the board to act for the board in implementing Iowa Code chapter 22.

"Open record" means a record other than a confidential record.

"Personally identifiable information" means information about or pertaining to an individual in a record which identifies the individual and which is contained in a record system.

"Record" means the whole or a part of a "public record" as defined in Iowa Code section 22.1, that is owned by or in the physical possession of the board.

"Record system" means any group of records under the control of the board from which a record may be retrieved by a personal identifier such as the name of an individual, number, symbol, or other unique retriever assigned to an individual.

[**ARC 0457C**, IAB 11/14/12, effective 12/19/12]

641—59.2(17A,22) Statement of policy. The purpose of this chapter is to facilitate broad public access to open records and sound board determinations with respect to the handling of confidential records and the implementation of the fair information practices Act. The board is committed to the policies set forth in Iowa Code chapter 22; board staff shall cooperate with members of the public in implementing the provisions of that chapter.

[**ARC 0457C**, IAB 11/14/12, effective 12/19/12]

641—59.3(17A,22) Requests for access to records.

59.3(1) *Location of record.* A request for access to a record should be directed to the board's executive officer or the board office where the record is kept. If the location of the record is not known by the requester, the request shall be directed to Iowa Plumbing and Mechanical Systems Board, Lucas State Office Building, 321 E. 12th Street, Des Moines, Iowa 50319-0075. If a request for access to a record is misdirected, board personnel will promptly forward the request to the appropriate person within the agency.

59.3(2) *Office hours.* Open records shall be made available during all customary office hours, which are 8 a.m. to 4:30 p.m. excluding Saturdays, Sundays, and legal holidays.

59.3(3) *Request for access.* Requests for access to open records may be made in writing, in person, or by telephone. Requests shall identify the particular records sought by name or description in order to facilitate the location of the records. Mail or telephone requests shall include the name, address, and telephone number of the person requesting the information. A person shall not be required to give a reason for requesting an open record.

59.3(4) *Response to requests.* Access to an open record shall be provided promptly by the custodian upon request unless the size or nature of the request makes prompt access infeasible. If the size or nature of the request for access to an open record requires time for compliance, the custodian shall comply with the request as soon as feasible. Access to an open record may be delayed for one of the purposes authorized by Iowa Code section 22.8(4) or 22.10(4). The custodian shall promptly give notice to the

requester of the reason for any delay in access to an open record and an estimate of the length of that delay and, upon request, shall promptly provide that notice to the requester in writing.

The custodian of a record may deny access to the record by members of the public only on the grounds that such a denial is warranted under Iowa Code sections 22.8(4) and 22.10(4), or that it is a confidential record, or that its disclosure is prohibited by a court order. Access by members of the public to a confidential record is limited by law and, therefore, may generally be provided only in accordance with the provisions of rule 641—59.4(17A,22) and other applicable provisions of law.

59.3(5) *Security of record.* No person may, without permission from the custodian, search or remove any record from board files. Examination and copying of board records shall be supervised by the custodian or a designee of the custodian. Records shall be protected from damage and disorganization.

59.3(6) *Copying.* A reasonable number of copies of an open record may be made in the board's office. If photocopy equipment is not available in the board office where an open record is kept, the custodian shall permit its examination in that office and shall arrange to have copies promptly made elsewhere.

59.3(7) *Fees.*

a. When charged. The board may charge fees in connection with the examination or copying of records only if the fees are authorized by law. To the extent permitted by applicable provisions of law, the payment of fees may be waived when the imposition of fees is inequitable or when a waiver is in the public interest.

b. Copying and postage costs. Price schedules for published materials and for photocopies of records supplied by the board shall be prominently posted in the board office. Copies of records may be made by or for members of the public on board photocopy machines or from electronic storage systems at cost as determined and posted in the board office by the custodian. When the mailing of copies of records is requested, the actual costs of such mailing may also be charged to the requester.

c. Search and supervisory fee. An hourly fee may be charged for actual board expenses in searching for and supervising the examination and copying of requested records when the time required is in excess of one hour. The custodian shall prominently post in the board office the hourly fee to be charged for search and supervision of records. That hourly fee shall not be in excess of the hourly wage of a board clerical employee who ordinarily would be appropriate and suitable to perform this supervisory function.

d. Advance deposits.

(1) When the estimated total fee chargeable under this subrule exceeds $25, the custodian may require a requester to make an advance payment to cover all or a part of the estimated fee.

(2) When a requester has previously failed to pay a fee chargeable under this subrule, the custodian may require advance payment of the full amount of any estimated fee before the custodian processes a new request from that requester.

[**ARC 0457C**, IAB 11/14/12, effective 12/19/12]

641—59.4(17A,22) Access to confidential records. Under Iowa Code section 22.7 or other applicable provisions of law, the lawful custodian may disclose certain confidential records to one or more members of the public. Other provisions of law authorize or require the custodian to release specified confidential records under certain circumstances or to particular persons. In requesting the custodian to permit the examination and copying of such a confidential record, the following procedures apply and are in addition to those specified for requests for access to records in rule 641—59.3(17A,22).

59.4(1) *Proof of identity.* A person requesting access to a confidential record may be required to provide proof of identity or authority to secure access to the record.

59.4(2) *Requests.* The custodian may require a request to examine and copy a confidential record to be in writing. A person requesting access to such a record may be required to sign a certified statement or affidavit enumerating the specific reasons justifying access to the confidential record and to provide any proof necessary to establish relevant facts.

59.4(3) *Notice to subject of record and opportunity to obtain injunction.* After the custodian receives a request for access to a confidential record, and before the custodian releases such a record, the custodian

may make reasonable efforts to notify promptly any person who is a subject of that record, is identified in that record, and whose address or telephone number is contained in that record. To the extent such a delay is practicable and in the public interest, the custodian may give the subject of such a confidential record to whom notification is transmitted a reasonable opportunity to seek an injunction under Iowa Code section 22.8, and indicate to the subject of the record the specific period of time during which disclosure will be delayed for that purpose.

59.4(4) *Request denied.* When the custodian denies a request for access to a confidential record, the custodian shall promptly notify the requester. If the requester indicates to the custodian that a written notification of the denial is desired, the custodian shall promptly provide such a notification that is signed by the custodian and that includes:

a. The name and title or position of the custodian responsible for the denial; and

b. A citation to the provision of law vesting authority in the custodian to deny disclosure of the record and a brief statement of the reasons for the denial to this requester.

59.4(5) *Request granted.* When the custodian grants a request for access to a confidential record to a particular person, the custodian shall notify that person and indicate any lawful restrictions imposed by the custodian on that person's examination and copying of the record.

[**ARC 0457C**, IAB 11/14/12, effective 12/19/12]

641—59.5(17A,22) Requests for treatment of a record as a confidential record and its withholding from examination. The custodian may treat a record as a confidential record and withhold it from examination only to the extent that the custodian is authorized by Iowa Code section 22.7, another applicable provision of law, or a court order, to refuse to disclose that record to members of the public.

59.5(1) *Persons who may request.* Any person who would be aggrieved or adversely affected by disclosure of a record and who asserts that Iowa Code section 22.7, another applicable provision of law, or a court order authorizes the custodian to treat the record as a confidential record may request the custodian to treat that record as a confidential record and to withhold it from public inspection.

59.5(2) *Request.* A request that a record be treated as a confidential record and be withheld from public inspection shall be in writing and shall be filed with the custodian. The request must set forth the legal and factual basis justifying such confidential record treatment for that record, and the name, address, and telephone number of the person authorized to respond to any inquiry or action of the custodian concerning the request. A person requesting treatment of a record as a confidential record may also be required to sign a certified statement or affidavit enumerating the specific reasons justifying the treatment of that record as a confidential record and to provide any proof necessary to establish relevant facts. Requests for treatment of a record as such a confidential record for a limited time period shall also specify the precise period of time for which that treatment is requested.

A person filing such a request shall, if possible, accompany the request with a copy of the record in question from which those portions for which such confidential record treatment has been requested have been deleted. If the original record is being submitted to the board by the person requesting such confidential treatment at the time the request is filed, the person shall indicate conspicuously on the original record that all or portions of it are confidential.

59.5(3) *Failure to request.* Failure of a person to request confidential record treatment for a record does not preclude the custodian from treating it as a confidential record. However, if a person who has submitted business information to the board does not request that it be withheld from public inspection under Iowa Code sections 22.7(3) and 22.7(6), the custodian of records containing that information may proceed as if that person has no objection to its disclosure to members of the public.

59.5(4) *Timing of decision.* A decision by the custodian with respect to the disclosure of a record to members of the public may be made when a request for its treatment as a confidential record that is not available for public inspection is filed, or when the custodian receives a request for access to the record by a member of the public.

59.5(5) *Request granted or deferred.* If a request for such confidential record treatment is granted, or if action on such a request is deferred, a copy of the record from which the matter in question has been deleted and a copy of the decision to grant the request or to defer action upon the request will be made

available for public inspection in lieu of the original record. If the custodian subsequently receives a request for access to the original record, the custodian will make reasonable and timely efforts to notify any person who has filed a request for its treatment as a confidential record that is not available for public inspection of the pendency of that subsequent request.

59.5(6) *Request denied and opportunity to seek injunction.* If a request that a record be treated as a confidential record and be withheld from public inspection is denied, the custodian shall notify the requester in writing of that determination and the reasons therefor. On application by the requester, the custodian may engage in a good-faith, reasonable delay in allowing examination of the record so that the requester may seek injunctive relief under the provisions of Iowa Code section 22.8, or other applicable provision of law. However, such a record shall not be withheld from public inspection for any period of time if the custodian determines that the requester had no reasonable grounds to justify the treatment of that record as a confidential record. The custodian shall notify requester in writing of the time period allowed to seek injunctive relief or the reasons for the determination that no reasonable grounds exist to justify the treatment of that record as a confidential record. The custodian may extend the period of good-faith, reasonable delay in allowing examination of the record so that the requester may seek injunctive relief only if no request for examination of that record has been received, or if a court directs the custodian to treat it as a confidential record, or to the extent permitted by another applicable provision of law, or with the consent of the person requesting access.
[**ARC 0457C**, IAB 11/14/12, effective 12/19/12]

641—59.6(17A,22) Procedure by which additions, dissents, or objections may be entered into certain records. Except as otherwise provided by law, a person may file a request with the custodian to review, and to have a written statement of additions, dissents, or objections entered into, a record containing personally identifiable information pertaining to that person. However, this does not authorize a person who is a subject of such a record to alter the original copy of that record or to expand the official record of any board proceeding. Requester shall send the request to review such a record or the written statement of additions, dissents, or objections to the custodian or to Iowa Plumbing and Mechanical Systems Board, Lucas State Office Building, 321 E. 12th Street, Des Moines, Iowa 50319-0075. The request to review such a record or the written statement of such a record of additions, dissents, or objections must be dated and signed by requester, and shall include the current address and telephone number of the requester or the requester's representative.
[**ARC 0457C**, IAB 11/14/12, effective 12/19/12]

641—59.7(17A,22) Consent to disclosure by the subject of a confidential record. To the extent permitted by any applicable provision of law, a person who is the subject of a confidential record may have a copy of the portion of that record concerning the subject disclosed to a third party. A request for such a disclosure must be in writing and must identify the particular record or records that may be disclosed, the particular person or class of persons to whom the record may be disclosed and, where applicable, the time period during which the record may be disclosed. The person who is the subject of the record and, where applicable, the person to whom the record is to be disclosed, may be required to provide proof of identity. (Additional requirements may be necessary for special classes of records.) Appearance of counsel before the board on behalf of a person who is the subject of a confidential record is deemed to constitute consent for the board to disclose records about that person to the person's attorney.
[**ARC 0457C**, IAB 11/14/12, effective 12/19/12]

641—59.8(17A,22) Notice to suppliers of information. When the board requests a person to supply information about that person, the board shall notify the person of the use that will be made of the information, which persons outside the agency might routinely be provided this information, which parts of the requested information are required and which are optional, and the consequences of a failure to provide the information requested. This notice may be given in these rules, on the written form used to

collect the information, on a separate fact sheet or letter, in brochures, in formal agreements, in contracts, in handbooks, in manuals, verbally, or by other appropriate means.
[**ARC 0457C**, IAB 11/14/12, effective 12/19/12]

641—59.9(17A,22) Disclosures without the consent of the subject.

59.9(1) Open records are routinely disclosed without the consent of the subject.

59.9(2) To the extent allowed by law, disclosure of confidential records may occur without the consent of the subject. Following are instances where disclosure, if lawful, will generally occur without notice to the subject:

a. For a routine use as defined in rule 641—59.10(17A,22) or in the notice for a particular record system.

b. To a recipient who has provided the board with advance written assurance that the record will be used solely as a statistical research or reporting record, provided that the record is transferred in a form that does not identify the subject.

c. Investigative information in the possession of the board or its employees or agents which relates to license discipline may be disclosed to appropriate licensing authorities within the state, the appropriate licensing authority in another state, the District of Columbia, or territory or country in which the licensee is licensed or has applied for a license. If the investigative information in the possession of the board or its employees or agents indicates a crime has been committed, the information shall be reported to the proper law enforcement agency.

d. To the legislative services agency under Iowa Code section 2A.3.

e. Disclosures in the course of employee disciplinary proceedings.

f. In response to a court order or subpoena.

g. To the office of citizens' aide pursuant to Iowa Code section 2C.9.
[**ARC 0457C**, IAB 11/14/12, effective 12/19/12]

641—59.10(17A,22) Routine use.

59.10(1) Defined. "Routine use" means the disclosure of a record without the consent of the subject or subjects, for a purpose which is compatible with the purpose for which the record was collected. "Routine use" includes disclosures required to be made by statute other than the public records law, Iowa Code chapter 22.

59.10(2) To the extent allowed by law, the following uses are considered routine use of all board records:

a. Disclosure to those officers, employees, and agents of the board who have a need for the record in the performance of their duties. The custodian of the record may, upon request of any office or employee, or on the custodian's own initiative, determine what constitutes legitimate need to use confidential records.

b. Disclosure of information indicating an apparent violation of the law to appropriate law enforcement authorities for investigation and possible criminal prosecution, civil court action, or regulatory order.

c. Disclosure to the department of inspections and appeals and the attorney general's office for the matters in which they are performing services or functions on behalf of the board.

d. Transfers of information within the board office and among board members, to other state boards and departments, or to local units of government as appropriate to carry out the board's statutory authority.

e. Disclosure of information relating to staff of federal and state entities for audit purposes or for purposes of determining whether the board is operating a program lawfully.

f. Any disclosure specifically authorized by the statute or rule under which the record was collected and maintained.

g. Disclosures to the public and news media of pleadings, motions, orders, final decisions, and informal settlements filed in licensee disciplinary proceedings.

h. Transmittal to the district court of the record in a disciplinary hearing, pursuant to Iowa Code section 17A.19(6), regardless of whether the hearing was open or closed.
[**ARC 0457C**, IAB 11/14/12, effective 12/19/12]

641—59.11(17A,22) Consensual disclosure of confidential records.

59.11(1) *Consent to disclosure by a subject individual.* To the extent permitted by law, the subject may consent in writing to board disclosure of confidential records as provided in rule 641—59.7(17A,22).

59.11(2) *Complaints to public officials.* A letter from the subject of a confidential record to a public official which seeks the official's intervention on behalf of the subject in a matter that involves the board may to the extent permitted by law be treated as an authorization to release sufficient information about the subject to the official to resolve the matter.
[**ARC 0457C**, IAB 11/14/12, effective 12/19/12]

641—59.12(17A,22) Release to subject.

59.12(1) The subject of a confidential record may file a written request to review confidential records about that person as provided in rule 641—59.6(17A,22). However, the board need not release the following records to the subject:

a. The identity of a person providing information to the board need not be disclosed directly or indirectly to the subject of the information when the information is authorized to be held confidential pursuant to Iowa Code section 22.7(18) or other provision of law.

b. Records need not be disclosed to the subject when they are the work product of an attorney or are otherwise privileged.

c. Peace officers' investigative reports may be withheld from the subject, except as required by the Iowa Code.

d. As otherwise authorized by law.

59.12(2) Where a record has multiple subjects with interest in the confidentiality of the record, the board shall take reasonable steps to protect confidential information relating to another subject.
[**ARC 0457C**, IAB 11/14/12, effective 12/19/12]

641—59.13(17A,22) Availability of records.

59.13(1) *General.* Board records are open for public inspection and copying unless otherwise provided by rule or law.

59.13(2) *Confidential records.* The following records may be withheld from public inspection. Records are listed by category, according to the legal basis for withholding them from public inspection.

a. All information in complaint and investigation files maintained by the board, or peer review committee acting under the authorization of the board, for purposes of license discipline is confidential in accordance with Iowa Code section 272C.6(4), except that the information may be released to the licensee once a licensee disciplinary proceeding has been initiated by the filing of formal charges and a notice of hearing.

b. The record of a disciplinary hearing which is closed to the public pursuant to Iowa Code section 272C.6(1) is confidential under Iowa Code section 21.5(4). However, in the event a record is transmitted to the district court pursuant to Iowa Code section 17A.19(6) for purposes of judicial review, the record shall not be considered confidential unless the district court so orders.

c. Minutes and tape recordings of portions of board meetings held in closed session, pursuant to Iowa Code section 21.5(4).

d. Records which are exempt from disclosure under Iowa Code section 22.7.

e. Identifying details in final orders, decisions, and opinions to the extent required to prevent a clearly unwarranted invasion of personal privacy or trade secrets under Iowa Code section 17A.3(1)*"e."*

f. Those portions of board staff manuals, instructions, or other statements issued which set forth criteria or guidelines to be used by board staff in auditing, in making inspections, in settling commercial disputes or negotiating commercial arrangements, or in the selection or handling of cases, such as operational tactics or allowable tolerances or criteria for the defense, prosecution or settlement of cases, when disclosure of these statements pursuant to Iowa Code sections 17A.2 and 17A.3 would:

(1) Enable law violators to avoid detection;

(2) Facilitate disregard of requirements imposed by law; or

(3) Give a clearly improper advantage to persons who are in an adverse position to the board.

g. Information in nonlicensee and investigation files maintained by the board which is otherwise exempt from disclosure under Iowa Code section 22.7 or other provision of law.

59.13(3) *Authority to release confidential records.* The board may have discretion to disclose some confidential records which are exempt from disclosure under Iowa Code section 22.7 or other provision of law. Any person may request permission to inspect records withheld from inspection under a statute which authorizes limited discretionary disclosure as provided in rule 641—59.4(17A,22). If the board initially determines that it will release such records, the board may, where appropriate, notify interested parties and withhold the records from inspection as provided in subrule 59.4(3).

[**ARC 0457C**, IAB 11/14/12, effective 12/19/12]

641—59.14(17A,22) Personally identifiable information. This rule describes the nature and extent of personally identifiable information which is collected, maintained, and retrieved by the board by personal identifier in record systems as defined in rule 641—59.1(17A,22). For each record system, this rule describes the legal authority for the collection of that information, and the means of storage of that information. The board does not use a data processing system to match, collate, or permit the comparison of personally identifiable information in one record system with personally identifiable information in another record system. The record systems maintained by the board are as follows:

59.14(1) Records of board disciplinary hearings. These records contain information about licensees who are the subject of a board disciplinary proceeding or other action. This information is stored on paper, and electronically in the event the hearing is tape-recorded.

59.14(2) Complaint reports. These records contain information about licensees and the people they serve. This information is collected pursuant to Iowa Code sections 272C.3 and 272C.4. This information is stored on paper only.

59.14(3) Investigative reports. These records contain information about the subjects of board investigations and the activities of board investigators. The records may include a variety of attachments such as interviews, audits, medical records, exhibits, police reports, and investigators' comments, conclusions, and recommendations. This information is collected pursuant to Iowa Code sections 272C.3, 272C.4, and 272C.5. This information is stored on paper and electronically.

59.14(4) Declaratory rulings.

59.14(5) Licensure records. These records contain information about the licensee including any or all of the following: applications for examination, collected pursuant to Iowa Code section 105.5; applications for licensure, collected pursuant to Iowa Code section 105.8; references, collected pursuant to Iowa Code section 105.18; examination scores, collected pursuant to Iowa Code section 105.18; past felony records, collected pursuant to Iowa Code section 105.18; and continuing education records, collected pursuant to Iowa Code section 272C.2. This information is stored on paper and electronically.

59.14(6) Information on nonlicensee complaint and nonlicensee investigation files maintained by the board. This information is collected pursuant to Iowa Code chapter 105. This information is stored on paper.

[**ARC 0457C**, IAB 11/14/12, effective 12/19/12]

641—59.15(17A,22) Other groups of records routinely available for public inspection. This rule describes groups of records maintained by the board other than record systems as defined in rule 641—59.2(17A,22). These records are not maintained or retrieved by personal identifiers. These records are routinely available to the public. However, the board's files of these records listed in subrules 59.14(1) to 59.14(6) may contain information about individuals. The information stored electronically includes names, business addresses, current status of licenses, licensee number, and statistical information pertaining to individuals. All other information is stored on paper and electronically. Other groups of records routinely available for public inspection include:

59.15(1) Records of board rule-making procedures. Rule-making records may contain information about individuals making written or oral comments on proposed rules.

59.15(2) Agendas, minutes, and materials presented to the board are available from the office of the board, except those records concerning closed sessions which are exempt from disclosure under Iowa Code section 21.5(4). Records which are exempt from disclosure may contain information about individuals who participate in board meetings.

59.15(3) Publications. News releases, annual reports, project reports, and board newsletters are available from the office of the board. Brochures describing various board programs are available at the office of the board.

Board news releases, project reports, and newsletters may contain information about individuals, including board members or staff.

59.15(4) Statistical reports. Statistical reports do not contain personally identifiable information.

59.15(5) Board decisions, final orders or agreements, advisory opinions, and other statements of law or policy issued by the board in the performance of its functions. These records are open pursuant to Iowa Code section 272C.6(4) except for information that is confidential pursuant to paragraph 59.13(2)*"c."*

59.15(6) Financial reports pertaining to the board's budget including its revenues and expenses. This information is stored electronically and on paper.

59.15(7) Blank forms utilized by the board and its staff in the performance of its function. This information is stored on paper only.

59.15(8) A record inventory of all categories of information and records kept by or on behalf of the board. This inventory is stored on paper only.

59.15(9) All other records that are not exempt from disclosure by law.

[**ARC 0457C**, IAB 11/14/12, effective 12/19/12]

641—59.16(17A,22) Applicability. This chapter does not:

1. Require the board to index or retrieve records which contain information about individuals by that person's name or other personal identifier.
2. Make available to the general public records which would otherwise not be available under the public records law, Iowa Code chapter 22.
3. Govern the maintenance or disclosure of, notification of, or access to records in the possession of the board which are governed by the rules of another agency.
4. Apply to grantees, including local governments or subdivisions thereof, administering state-funded programs, unless otherwise provided by law or agreement.
5. Make available records compiled by the board in reasonable anticipation of court litigation or formal administrative proceedings. The availability of such records to the general public or to any individual or party subject to such litigation or proceedings shall be governed by applicable legal and constitutional principles, statutes, rules of discovery, evidentiary privileges, and applicable rules of the board.

[**ARC 0457C**, IAB 11/14/12, effective 12/19/12]

These rules are intended to implement Iowa Code section 22.11.

[Filed ARC 0457C (Notice ARC 0317C, IAB 9/5/12), IAB 11/14/12, effective 12/19/12]

CHAPTER 60
PLUMBING AND MECHANICAL SYSTEMS BOARD— NONCOMPLIANCE REGARDING CHILD SUPPORT, NONPAYMENT OF STATE DEBT, AND NONCOMPLIANCE REGARDING STUDENT LOAN REPAYMENT

641—60.1(252J) Child support noncompliance. The board hereby adopts by reference 641—Chapter 192, "Child Support Noncompliance," Iowa Administrative Code.
[**ARC 0458C**, IAB 11/14/12, effective 12/19/12]

641—60.2(272D) Nonpayment of state debt. The board hereby adopts by reference 641—Chapter 194, "Nonpayment of State Debt," Iowa Administrative Code.
[**ARC 0458C**, IAB 11/14/12, effective 12/19/12]

641—60.3(261) Student loan repayment noncompliance. The board hereby adopts by reference 641—Chapter 195, "Student Loan Default/Noncompliance with Agreement for Payment of Obligation," Iowa Administrative Code.
[**ARC 0458C**, IAB 11/14/12, effective 12/19/12]

These rules are intended to implement Iowa Code chapters 252J and 272D and section 261.126.

[Filed ARC 0458C (Notice ARC 0313C, IAB 9/5/12), IAB 11/14/12, effective 12/19/12]

CHAPTER 61
STATE MECHANICAL CODE

641—61.1(105) Definitions. The following definitions apply to this chapter:

"Ambulatory health care facility" means a facility or portion thereof used to provide services or treatment that provides, on an outpatient basis, treatment for one or more patients that renders the patients incapable of taking action for self-preservation under emergency conditions without the assistance of others; or provides, on an outpatient basis, anesthesia that renders the patient incapable of taking action for self-preservation under emergency conditions without the assistance of others.

"Hospice" means a facility licensed or seeking licensure pursuant to Iowa Code section 135J.2.

"Hospital" means a facility licensed or seeking licensure pursuant to Iowa Code chapter 135B.

"Intermediate care facility for persons with an intellectual disability" means a facility licensed or seeking licensure pursuant to Iowa Code section 135C.2(3)*"c."*

"Life Safety Code" means the 2000 edition of the Life Safety Code of the National Fire Protection Association, Batterymarch Park, Quincy, MA 02269, or the most recent version of the Life Safety Code adopted by reference by the federal Centers for Medicare and Medicaid Services.

"Nursing facility" means a facility licensed or seeking licensure pursuant to Iowa Code section 135C.6, including a nursing facility for intermediate care or a nursing facility for skilled care.

[**ARC 1494C**, IAB 6/11/14, effective 7/16/14]

641—61.2(105) Adoption by reference. The provisions of the International Mechanical Code, 2012 edition, published by the International Code Council, 5203 Leesburg Pike, Suite 600, Falls Church, VA 22041, are hereby adopted by reference as the requirements for the design, installation, maintenance, alteration, and inspection of mechanical systems that are permanently installed and utilized to provide control of environmental conditions and related processes within buildings, with the following amendments:

61.2(1) Delete section 101.1.

61.2(2) In section 101.2, delete the phrase "International Fuel Gas Code" and insert in lieu thereof "NFPA 54, National Fuel Gas Code, 2012 edition; NFPA 58, Liquefied Petroleum Gas Code, 2011 edition; and the state plumbing code."

61.2(3) Delete sections 103, 104, 105, 106, 107, 108, 109, and 110 and sections therein.

61.2(4) Delete section 401.1 and insert in lieu thereof the following new section:

401.1 Scope. This chapter shall govern the ventilation of spaces within a building intended to be occupied. These buildings shall meet either the requirements of ASHRAE Standard 62.1, "Ventilation for Acceptable Indoor Air Quality," 2010 edition, published by the American Society of Heating, Refrigeration, and Air-Conditioning Engineers, 1791 Tullie Circle N.E., Atlanta, GA 30329, or the requirements contained in this chapter. Mechanical exhaust systems, including exhaust systems serving clothes dryers and cooking appliances; hazardous exhaust systems; dust, stock, and refuse conveyor systems; subslab soil exhaust systems; smoke control systems; energy recovery ventilation systems; and other systems specified in Section 502 shall comply with Chapter 5.

61.2(5) Add the following footnote "i" related to the gym, stadium, arena (play area) category of the sports and amusement occupancy classification in Table 403.3, Minimum Ventilation Rates:

i. When combustion equipment is intended to be used on the playing surface, additional dilution ventilation and/or source control shall be provided.

61.2(6) Delete appendices A and B.

61.2(7) Delete all references to the "International Plumbing Code" and insert in lieu thereof "state plumbing code."

[**ARC 1494C**, IAB 6/11/14, effective 7/16/14]

641—61.3(105) Hospitals and health care facilities.

61.3(1) A hospital that is required to meet the provisions of the state mechanical code shall be deemed to be in compliance with the fire safety requirements of the state mechanical code if the hospital is in compliance with the provisions of rule 661—205.5(100). In any other case in which an applicable

requirement of the Life Safety Code is inconsistent with an applicable requirement of the state mechanical code, the hospital shall be deemed to be in compliance with the state mechanical code requirement if the Life Safety Code requirement is met.

61.3(2) A nursing facility or hospice that is required to meet the provisions of the state mechanical code shall be deemed to be in compliance with the fire safety requirements of the state mechanical code if the nursing facility or hospice is in compliance with the provisions of rule 661—205.10(100). In any other case in which an applicable requirement of the Life Safety Code is inconsistent with an applicable requirement of the state mechanical code, the nursing facility or hospice shall be deemed to be in compliance with the state mechanical code requirement if the Life Safety Code requirement is met.

61.3(3) An intermediate care facility for persons with an intellectual disability or intermediate care facility for persons with mental illness that is required to meet the provisions of the state mechanical code shall be deemed to be in compliance with the fire safety requirements of the state mechanical code if the intermediate care facility is in compliance with the provisions of rule 661—205.15(100). In any other case in which an applicable requirement of the Life Safety Code is inconsistent with an applicable requirement of the state mechanical code, the intermediate care facility shall be deemed to be in compliance with the state mechanical code requirement if the Life Safety Code requirement is met.

61.3(4) An ambulatory health care facility that is required to meet the provisions of the state mechanical code shall be deemed to be in compliance with the fire safety requirements of the state mechanical code if the ambulatory health care facility is in compliance with the provisions of rule 661—205.20(100). In any other case in which an applicable requirement of the Life Safety Code is inconsistent with an applicable requirement of the state mechanical code, the ambulatory health care facility shall be deemed to be in compliance with the state mechanical code requirement if the Life Safety Code requirement is met.

61.3(5) A religious nonmedical health care institution that is required to meet the provisions of the state mechanical code shall be deemed to be in compliance with the provisions of the state mechanical code if the institution is in compliance with the provisions of rule 661—205.25(100). In any other case in which an applicable requirement of the Life Safety Code is inconsistent with an applicable requirement of the state mechanical code, the religious nonmedical health care institution shall be deemed to be in compliance with the state mechanical code requirement if the Life Safety Code requirement is met.

[**ARC 1494C**, IAB 6/11/14, effective 7/16/14]

641—61.4(105) Enforcement. Any state or local jurisdiction retaining authority to perform inspections of mechanical installations in the state of Iowa shall retain initial interpretive authority over the state mechanical code and may implement an appeals process with respect to such interpretation. Ultimate appeal of any initial interpretation may be made to the plumbing and mechanical systems board by the filing of a petition for declaratory order pursuant to rule 641—57.1(17A) or the filing of a petition for waiver pursuant to 641—Chapter 31.

[**ARC 1494C**, IAB 6/11/14, effective 7/16/14]

These rules are intended to implement Iowa Code section 105.4.

[Filed ARC 1494C (Notice ARC 1364C, IAB 3/5/14), IAB 6/11/14, effective 7/16/14]

CHAPTERS 62 to 66
Reserved

CHAPTER 67
BLOOD LEAD TESTING

641—67.1(135) Purpose. The purpose of the blood lead testing requirement is to improve the health of Iowa's children. Blood lead testing will facilitate early detection and referral for treatment of lead poisoning; reduce the incidence, impact, and cost of lead poisoning; inform parents and guardians of their children's exposure to lead; promote the importance of reducing exposure to lead as an integral component of preparation for school and learning; and contribute to statewide surveillance of childhood lead poisoning.

641—67.2(135) Definitions. For purposes of this chapter, the following definitions apply:

"Applicant" means any person seeking first-time enrollment in kindergarten in a public or accredited nonpublic elementary school in Iowa.

"Blood lead database" means the database maintained by the department that includes the results of all blood lead testing reported to the department as required by 641—Chapter 1.

"Blood lead testing" means taking a capillary or venous sample of blood and sending it to a laboratory to determine the level of lead in the blood.

"Capillary" means a blood sample taken from the finger or heel for lead analysis.

"Department" means the Iowa department of public health.

"Elementary school" means an Iowa school district or accredited nonpublic school offering kindergarten.

"Health care provider" means a physician licensed under Iowa Code chapter 148, 150, or 150A, a physician assistant licensed under Iowa Code chapter 148C, or an advanced registered nurse practitioner licensed under Iowa Code chapter 152.

"Laboratory" means a laboratory certified to perform either waived or non-waived blood lead analysis according to the federal Clinical Laboratory Improvement Act of 1988 (CLIA).

"Transfer student" means an applicant from any elementary school outside Iowa who is seeking enrollment in kindergarten in an elementary school in Iowa.

"Venous" means a blood sample taken from a vein in the arm for lead analysis.

"Very low risk" means that a child has not (1) lived in, visited, or spent time in any building built before 1960, including but not limited to the child's home, a daycare center, a preschool, a baby-sitter's home or a relative's home; (2) eaten nonfood items; (3) lived with or frequently come in contact with an adult who works with lead on the job or as part of a hobby, including but not limited to painting, welding, foundry work, renovating old homes, working at a shooting range, manufacturing or recycling batteries, working with ceramics or stained glass, working with sheet metal or scrap metal, or plumbing; (4) lived near a battery manufacturing plant, battery recycling plant, lead smelter, or other source of lead emissions; (5) been born in or spent more than three months in Mexico, Central America, eastern Europe, or southeast Asia; (6) ingested food, candy, or remedies containing lead; (7) played with toys, jewelry, or other items that the U.S. Consumer Product Safety Commission has recalled due to lead contamination; or (8) been exposed to any other products or substances determined by the department, the U.S. Environmental Protection Agency, the U.S. Department of Housing and Urban Development, the Centers for Disease Control and Prevention, or the U.S. Food and Drug Administration to contain lead.

641—67.3(135) Persons included. The blood lead testing requirement specified in this chapter applies to all applicants and transfer students as defined in this chapter.

641—67.4(135) Persons excluded. Exclusions to these rules are permitted on an individual basis for religious reasons and for children determined by the department to be at very low risk for elevated blood lead levels. The parent or guardian of an applicant or transfer student approved for a religious exemption or an exemption for very low risk shall submit to the board of directors of each school district and the authorities in charge of each nonpublic school a valid Iowa department of public health certificate of

blood lead testing exemption. To be valid, the certificate shall be the certificate of blood lead testing exemption provided or approved by the department.

67.4(1) Religious exemption. A religious exemption may be granted to an applicant or transfer student if the blood lead testing conflicts with a genuine and sincere religious belief.

a. The certificate of blood lead testing exemption for religious reasons shall attest that the blood lead testing conflicts with a genuine and sincere religious belief and that the belief is in fact religious and not based merely on philosophical, scientific, moral, personal, or medical opposition to blood lead testing.

b. The certificate of blood lead testing exemption for religious reasons shall be signed and dated by the applicant's or transfer student's parent or guardian.

c. The certificate is valid only when notarized.

67.4(2) Exemption for very low risk. The department may grant to an applicant or transfer student an exemption for very low risk if the parent or guardian provides evidence satisfactory to the department that the applicant or transfer student meets the definition of very low risk.

a. The certificate of blood lead testing exemption for very low risk shall be signed and dated by the applicant's or transfer student's parent or guardian and by the chief of the bureau of lead poisoning prevention.

b. The certificate of blood lead testing exemption for very low risk is valid only when notarized.

67.4(3) A faxed copy, photocopy, or electronic copy of the valid certificate of blood lead testing exemption is acceptable.

641—67.5(135) Blood lead testing requirement.

67.5(1) Each applicant and transfer student shall meet the requirements of subrule 67.6(1).

67.5(2) The board of directors of each school district and the authorities in charge of each nonpublic school shall, in collaboration with the department, ensure that applicants and transfer students comply with the blood lead testing requirement according to subrule 67.6(1).

641—67.6(135) Time line for valid blood lead testing.

67.6(1) To be valid, a blood lead test shall be performed on an applicant or transfer student before the applicant or transfer student reaches six years of age, or in cases in which the applicant or transfer student has already reached six years of age, as soon as the department notifies the parent or guardian that a blood lead test has not yet been performed.

67.6(2) Desirable age for blood lead testing. A parent or guardian of a child under two years of age is strongly encouraged to have the child tested for elevated blood lead levels by the time that the child reaches two years of age.

641—67.7(135) Proof of blood lead testing.

67.7(1) The board of directors of each school district and the authorities in charge of each nonpublic school shall furnish the department, in the format specified by the department, within 60 days after the start of the school calendar, an electronic list of the children enrolled in kindergarten, including the names of children who have filed certificates of blood lead testing exemption.

67.7(2) The department shall match these electronic lists of children with the department's blood lead database and shall notify the school districts and nonpublic schools of the children who have and who have not met the blood lead testing requirement set forth in this chapter.

67.7(3) If the parent or guardian cannot provide evidence that the child received a blood lead test in accordance with subrule 67.5(1), the board of directors of the school district or the authorities in charge of the nonpublic school shall, in collaboration with the department, provide the parent or guardian with community blood lead testing program information, including contact information for the department. The department shall provide this information to and shall work with the school districts, nonpublic schools, and the local childhood lead poisoning prevention programs to ensure that children who have not met the blood lead testing requirement are tested as required by subrule 67.5(1).

641—67.8(135) Referral requirements. Parents or guardians of children who require a blood lead test shall be referred to a health care provider of choice. The parents or guardians of children without a health care provider or who have difficulty accessing blood lead testing shall be referred to a local childhood lead poisoning prevention program, local child health center, or local public health agency for assistance with completion of blood lead testing. This assistance may include locating health care providers, scheduling appointments, identifying payment sources, and providing blood lead testing.

641—67.9(135) Blood lead testing documentation. A health care provider performing a blood lead test required by this chapter shall ensure that the results of the blood lead test are reported to the department as required by 641—Chapter 1.

641—67.10(135) Records. The board of directors of each school district and the authorities in charge of each nonpublic school shall, in collaboration with the department, ensure that each applicant and transfer student complies with the blood lead testing requirement according to subrule 67.6(1) or has a valid certificate of blood lead testing exemption on file.

67.10(1) The board of directors of each school district and the authorities in charge of each nonpublic school shall ensure that the certificate of blood lead testing exemption is properly completed according to rule 641—67.4(135).

67.10(2) Within the constraints of the privacy rights of the parents or guardians and students, the local board of health, the department of education, and the department or its designee shall have the right to have access to the department's determination that a child has received a blood lead test and to the certificates of blood lead testing exemption of children enrolled in kindergarten.

641—67.11(135) Provider training. For the purpose of quality assurance and consistency, the department shall make training and training materials available for health care providers who will be performing blood lead testing and for school officials, school health personnel, local childhood lead poisoning prevention programs, local child health centers, and local public health agencies.

These rules are intended to implement Iowa Code Supplement section 135.105D and 2008 Iowa Acts, Senate File 2111.

[Filed 7/10/08, Notice 5/21/08—published 7/30/08, effective 9/3/08]

CHAPTER 68
CONTROL OF LEAD-BASED PAINT HAZARDS

641—68.1(135) Applicability. The provisions of this chapter are applicable in jurisdictions in which a local board has adopted this chapter for the purpose of requiring control of lead-based paint hazards where a child has been identified with an elevated blood lead level. Nothing in this chapter shall be construed as requiring a local board to adopt this chapter as a model regulation.

641—68.2(135) Definitions.

"Certified elevated blood lead (EBL) inspector/risk assessor" means a person who has met the requirements of Iowa Administrative Code 641—70.5(135) for certification or interim certification and who has been certified by the department.

"Chewable surface" means an interior or exterior surface painted with lead-based paint that a young child can mouth or chew.

"Child-occupied facility" means a building, or portion of a building, constructed prior to 1978, visited by the same child under the age of six years on at least two different days within any week (Sunday through Saturday period, provided that each day's visit lasts at least three hours and the combined weekly visits last at least six hours). Child-occupied facilities may include, but are not limited to, day care centers, preschools and kindergarten classrooms.

"Clearance testing" means an activity conducted following interim controls, lead abatement, paint stabilization, standard treatments, ongoing lead-based paint maintenance, or rehabilitation to determine that the hazard reduction activities are complete. Clearance testing includes a visual assessment, the collection and analysis of environmental samples, the interpretation of sampling results, and the preparation of a report.

"Department" means the Iowa department of public health.

"Deteriorated paint" means any interior or exterior paint or other coating that is cracking, flaking, chipping, peeling, or chalking, or any paint or coating located on an interior or exterior surface that is otherwise damaged or separated from the substrate of a building component.

"Dripline" means the area within three feet surrounding the perimeter of a building.

"Dust-lead hazard" means surface dust in residential dwellings or child-occupied facilities that contains a mass-per-area concentration of lead greater than or equal to 40 micrograms per square foot on floors, 250 micrograms per square foot on interior windowsills, and 400 micrograms per square foot on window troughs based on wipe samples. A dust-lead hazard is present in a residential dwelling or child-occupied facility when the weighted arithmetic mean lead loading for all single-surface or composite samples of floors and interior windowsills is greater than or equal to 40 micrograms per square foot on floors, 250 micrograms per square foot on interior windowsills, and 400 micrograms per square foot on widow troughs based on wipe samples. A dust-lead hazard is present on floors, interior windowsills, or window troughs in an unsampled residential dwelling in a multifamily dwelling if a dust-lead hazard is present on floors, interior windowsills, or window troughs, respectively, in at least one sampled residential unit on the property. A dust-lead hazard is present on floors, interior windowsills, or window troughs in an unsampled common area in a multifamily dwelling if a dust-lead hazard is present on floors, interior windowsills, or window troughs, respectively, in at least one sampled common area in the same common area group on the property. If dust samples are not taken, it may be assumed that surfaces in rooms with hazardous lead-based paint or where renovation, remodeling, or repainting has occurred recently are dust-lead hazards.

"Elevated blood lead (EBL) child" means any child who has had one venous blood lead level greater than or equal to 20 micrograms per deciliter or at least two venous blood lead levels of 15 to 19 micrograms per deciliter.

"Elevated blood lead (EBL) inspection" means an inspection to determine the sources of lead exposure for an elevated blood lead (EBL) child and the provision within ten working days of a written report explaining the results of the investigation to the property owner and occupant of the residential dwelling or child-occupied facility being inspected and to the parents of the elevated blood lead (EBL)

child. A certified elevated blood lead (EBL) inspector/risk assessor shall not determine that a residential dwelling is free of lead-based paint as a result of an elevated blood lead (EBL) inspection.

"Friction surface" means an interior or exterior surface that is subject to abrasion or friction including, but not limited to, certain window, floor, and stair surfaces.

"Hazardous lead-based paint" means lead-based paint that is present on a friction surface where there is evidence of abrasion or where the dust-lead level on the nearest horizontal surface underneath the friction surface (e.g., the windowsill or floor) is equal to or greater than the dust-lead hazard level, lead-based paint that is present on an impact surface that is damaged or otherwise deteriorated from impact, lead-based paint that is present on a chewable surface, or any other deteriorated lead-based paint in any residential building or child-occupied facility or on the exterior of a residential building or child-occupied facility.

"Impact surface" means an interior or exterior surface that is subject to damage by repeated sudden force such as certain parts of doorframes.

"Lead-based paint" means any paint or other surface coatings that contain lead equal to or in excess of 1.0 milligram of lead per square centimeter or more than 0.5 percent by weight. Lead-based paint is present on any surface that is tested and found to contain lead equal to or in excess of 1.0 milligram per square centimeter or more than 0.5 percent by weight and on any surface like a surface tested in the same room equivalent that has a similar painting history and that is found to be lead-based paint.

"Lead-based paint hazard" means hazardous lead-based paint, a dust-lead hazard, or a soil-lead hazard.

"Local board" means the local board of health as authorized by Iowa Code chapter 137.

"Mid-yard" means an area of a residential yard approximately midway between the dripline of a residential building and the nearest property boundary or between the driplines of a residential building and another building on the same property.

"Occupant" means any person living, sleeping, cooking or eating in, or having any actual possession of, a dwelling or dwelling unit.

"Owner" means any person who, alone or jointly with others: (1) has legal title to any dwelling, with or without accompanying actual possession thereof, or (2) has charge, care or control of any dwelling by acting as the agent of the owner or as the executor, administrator, trustee, or guardian of the estate of the owner.

"Paint-lead hazard" means the presence of hazardous lead-based paint in a residential dwelling or a child-occupied facility.

"Play area" means an area of frequent soil contact by children of less than six years of age as indicated by, but not limited to, factors including the following: the presence of play equipment (sandboxes, swing sets, and sliding boards), toys, or other children's possessions; observations of play patterns; or information provided by parents, residents, caregivers, or property owners.

"Residential building" means a building containing one or more residential dwellings.

"Residential dwelling" means (1) a detached single-family dwelling unit, including the surrounding yard, attached structures such as porches and stoops, and detached buildings and structures including, but not limited to, garages, farm buildings, and fences; or (2) a single-family dwelling unit in a structure that contains more than one separate residential dwelling unit, which is used or occupied, or intended to be used or occupied, in whole or part, as the home or residence of one or more persons.

"Retaliation" means harassment, termination of the tenancy, discontinuation of utilities or other services, and any other action taken against the lessee.

"Soil-lead hazard" means bare soil on residential real property or on the property of a child-occupied facility that contains total lead greater than or equal to 400 parts per million for the dripline, mid-yard, and play areas. A soil-lead hazard is present in a dripline, mid-yard, or play area when the soil-lead concentration from a composite sample of bare soil is greater than or equal to 400 parts per million. If soil samples are not taken, it may be assumed that bare soil within three feet of the foundation of a garage or other structure built prior to 1978 is a soil-lead hazard.

641—68.3(135) Elevated blood lead (EBL) inspections required. The local board shall appoint a certified elevated blood lead (EBL) inspector/risk assessor to conduct elevated blood lead (EBL) inspections in residential dwellings and child-occupied facilities where an elevated blood lead (EBL) child lives, visits, or has recently lived. All owners and occupants shall allow access to the residential dwellings and child-occupied facilities that the certified elevated blood lead (EBL) inspector/risk assessor desires to inspect.

641—68.4(135) Refusal of admittance. If the certified elevated blood lead (EBL) inspector/risk assessor appointed by the local board is refused entry to a property, then the certified elevated blood lead (EBL) inspector/risk assessor may make a complaint under oath to any magistrate of the county. The magistrate may issue a warrant directing the owner or occupant to allow the certified elevated blood lead (EBL) inspector/risk assessor to conduct an elevated blood lead (EBL) inspection and directing a peace officer to accompany the certified elevated blood lead (EBL) inspector/risk assessor during the elevated blood lead (EBL) inspection/risk assessment.

641—68.5(135) Lead hazard reduction required.

68.5(1) When the certified elevated blood lead (EBL) inspector/risk assessor appointed by the local board determines that hazardous lead-based paint, a dust-lead hazard, or a soil-lead hazard is present in a residential dwelling unit or child-occupied facility where an elevated blood lead (EBL) child lives, frequently visits, or has recently resided, the certified elevated blood lead inspector/risk assessor shall issue a written notice to the owner within two weeks of the inspection and receipt of any laboratory results. The written notice shall require the owner to complete lead hazard reduction in a time period determined by the certified elevated blood lead (EBL) inspector/risk assessor. If the occupant who occupies the residential dwelling at the time that this written notice is issued vacates the residential dwelling, the residential dwelling shall not be leased or occupied by any other person until the certified elevated blood lead (EBL) inspector/risk assessor issues a written notice that the lead hazard reduction has been completed.

68.5(2) The owner of any residential dwelling or child-occupied facility which has been determined to contain hazardous lead-based paint, a soil-lead hazard, or a dust-lead hazard shall correct these hazards within the time period allowed by the certified elevated blood lead (EBL) inspector/risk assessor in the written notice. The following methods shall be used for lead hazard reduction. These methods shall not require the services of a lead abatement contractor certified in accordance with Iowa Administrative Code 641—70.5(135). However, other local, state, or federal regulations may require the use of a contractor who has completed an eight-hour lead-safe work practices course or a lead abatement contractor or lead abatement worker certified in accordance with Iowa Administrative Code 641—70.5(135).

a. On a surface that contains hazardous lead-based paint, but is not chewable and does not have evidence of impact or friction, the lead-based paint hazard shall be reduced by removing all loose and deteriorated paint from the surface, preparing the surface for repainting, and repainting the surface with a lead-free coating.

b. On a surface that contains hazardous lead-based paint and is chewable or has evidence of impact or friction, the lead-based paint hazard shall be reduced by treating the surface one inch back from the edge or corner through one of the following methods:

(1) All lead-based paint on the treatment area shall be removed to the bare substrate. The surface shall be prepared for repainting and repainted with a lead-free coating.

(2) The treatment area shall be covered with a permanently affixed lead-free material such as plastic, wood, or vinyl. Carpet may be used on floors and stair treads.

c. Dust-lead hazards shall be reduced by thoroughly cleaning the affected surface.

d. Soil-lead hazards shall be reduced by planting grass or groundcover, applying sod, or covering the affected area with six inches of bark, gravel, or other material.

e. Lead hazard reduction shall be conducted using lead-safe work practices to protect the safety of the occupants and workers. Occupants shall not enter the work area while work is underway. The following are prohibited methods of lead hazard reduction:

(1) Open-flame burning or torching of lead-based paint.

(2) Machine sanding or grinding or abrasive blasting or sandblasting of lead-based paint unless used with high-efficiency particulate air (HEPA) exhaust control that removes particles of 0.3 microns or larger from the air at 99.97 percent or greater efficiency.

(3) Uncontained water blasting of lead-based paint.

(4) Dry scraping or dry sanding of lead-based paint except in conjunction with the use of a heat gun or around electrical outlets.

(5) Operating a heat gun at a temperature above 1100 degrees Fahrenheit.

68.5(3) The certified elevated blood lead (EBL) inspector/risk assessor shall inspect all areas identified as hazards after lead hazard reduction is complete. The certified elevated blood lead (EBL) inspector/risk assessor may conduct clearance testing pursuant to Iowa Administrative Code 641—Chapter 70 to ensure that no dust-lead hazards exist after the work is complete. Within two weeks of verifying that all lead hazard reduction has been completed as required, the certified elevated blood lead (EBL) inspector/risk assessor shall issue a written notice to the owner and occupant stating that the lead hazard reduction has been completed and that the repaired surfaces must be maintained in good condition.

641—68.6(135) Retaliation prohibited.

68.6(1) The lessor of a dwelling, the employees of the lessor, and agents or persons acting on behalf of the lessor shall not retaliate against lessees of residential dwellings and child-occupied facilities whose occupants or visitors have been tested for lead poisoning and shall not discourage the occupants or visitors from being tested for lead poisoning.

68.6(2) An action taken against the lessee shall not be considered retaliation if it is supported by reasonable cause unrelated to the testing of an occupant for lead poisoning or if it is shown to have occurred as a result of an accident or mistake and not to be the intentional act of the lessor of a dwelling, the employees of the lessor, or agents or persons acting on behalf of the lessor.

641—68.7(135) Enforcement. The certified elevated blood lead (EBL) inspector/risk assessor appointed by the local board shall have the duty and responsibility of enforcing this chapter.

68.7(1) Penalties shall be as provided in Iowa Code section 137.21.

68.7(2) Upon failure of any person to correct a hazard identified through this chapter in the time specified by the certified elevated blood lead (EBL) inspector/risk assessor appointed by the local board, the local board may direct or cause the correction of said hazards. All expenses incurred thereby may be recovered by suit in the name of the local board, or the local board may certify the amount of said expenses, together with a description of the property, to the county treasurer, who shall enter the same upon the tax books as costs for removing a lead hazard, and said amounts shall be collected as other taxes.

641—68.8(135) Hearings. In the event any person is aggrieved by any order of the certified elevated blood lead (EBL) inspector/risk assessor, the person may appeal to the local board in writing within ten days of the date of such order. The appeal shall state the reasons for requesting such order to be rescinded or modified. The local board shall review the action of the certified elevated blood lead (EBL) inspector/risk assessor. The local board shall order compliance with said order or may, with cause, modify or withdraw said order. Any order of the local board may be appealed within ten days to the district court for the county in which the local board is located.

641—68.9(135) Variances. The elevated blood lead (EBL) inspector/risk assessor may determine that a chewable surface that would otherwise be identified as a hazard by this chapter is not causing or does not have reasonable potential to cause lead exposure and is not required to be corrected through lead hazard reduction. The elevated blood lead (EBL) inspector/risk assessor shall document the reason for this determination in the inspection report. However, the elevated blood lead (EBL) inspector/risk assessor

shall not, under any circumstances, determine that any other surface meeting the definition of hazardous lead-based paint does not need to be corrected through lead hazard reduction.

641—68.10(135) Injunction. Nothing in this chapter shall prohibit a local board from pursuing injunctive relief or other relief as allowed by law.

641—68.11(135) Effective date. This chapter shall be in effect in a jurisdiction after a local board adopts it.

These rules are intended to implement Iowa Code section 135.102.

[Filed 7/16/04, Notice 5/26/04—published 8/4/04, effective 9/8/04]

CHAPTER 69
RENOVATION, REMODELING, AND REPAINTING— LEAD HAZARD NOTIFICATION PROCESS

641—69.1(135) Applicability. This chapter applies to all persons who perform renovation, remodeling, or repainting for compensation in target housing or a child-occupied facility.
[**ARC 8501B**, IAB 2/10/10, effective 1/13/10]

641—69.2(135) Definitions.

"Arithmetic mean" means the algebraic sum of data values divided by the number of data values. For example, the sum of the concentration of lead in several soil samples divided by the number of samples is the arithmetic mean.

"Certificate of mailing" means certified mail with return receipt or its equivalent.

"Chewable surface" means an interior or exterior surface painted with lead-based paint that a young child can mouth or chew.

"Child-occupied facility" means a building, or portion of a building, constructed prior to 1978, that is described by all of the following: (1) The building is visited on a regular basis by the same child, who is less than six years of age, on at least two different days within any week. For purposes of this chapter, a week is a Sunday through Saturday period. (2) Each day's visit by the child lasts at least 3 hours, and the combined annual visits total at least 60 hours. A child-occupied facility may include, but is not limited to, a child care center, preschool, or kindergarten classroom. A child-occupied facility also includes common areas that are routinely used by children who are less than six years of age, such as restrooms and cafeterias, and the exterior walls and adjoining space of the building that are immediately adjacent to the child-occupied facility or the common areas routinely used by children under the age of six years. "Child-occupied facility" also includes any building where lead-based paint activities are conducted immediately prior to or during the conversion of the building to a child-occupied facility.

"Common area" means a portion of the building that is generally accessible to all occupants. This includes, but is not limited to, hallways, stairways, laundry and recreational rooms, playgrounds, community centers, garages, and boundary fences.

"Compensation" means payment or reimbursement for services performed. Compensation is not limited to monetary considerations and includes payment of rent for rental units, receipt of a salary from the owner or manager of target housing, and receipt of a salary from the owner or operator of a child-occupied facility.

"Components" means specific design or structural elements or fixtures of a building, residential dwelling, or child-occupied facility that are distinguished from each other by form, function, and location. These include, but are not limited to, interior components such as ceilings, crown moldings, walls, chair rails, doors, door trim, floors, fireplaces, radiators and other heating units, shelves, shelf supports, stair treads, stair risers, stair stringers, newel posts, railing caps, balustrades, windows and trim (including sashes, window heads, jambs, sills or stools and troughs), built-in cabinets, columns, beams, bathroom vanities, countertops, and air conditioners; and exterior components such as painted roofing, chimneys, flashing, gutters and downspouts, ceilings, soffits, fascias, rake boards, cornerboards, bulkheads, doors and door trim, fences, floors, joists, latticework, railings and railing caps, siding, handrails, stair risers and treads, stair stringers, columns, balustrades, windowsills or stools and troughs, casing, sashes and wells, and air conditioners.

"Department" means the department of public health.

"Dripline" means the area within three feet surrounding the perimeter of a building.

"Dust-lead hazard" means surface dust in residential dwellings or child-occupied facilities that contains a mass-per-area concentration of lead equal to or exceeding 40 micrograms per square foot on floors, 250 micrograms per square foot on interior windowsills, and 400 micrograms per square foot on window troughs based on wipe samples. A dust-lead hazard is present in a residential dwelling or child-occupied facility when the weighted arithmetic mean lead loading for all single-surface or composite samples of floors and interior windowsills is equal to or greater than 40 micrograms per

square foot on floors, 250 micrograms per square foot on interior windowsills, and 400 micrograms per square foot on window troughs based on wipe samples. A dust-lead hazard is present on floors, interior windowsills, or window troughs in an unsampled residential dwelling in a multifamily dwelling if a dust-lead hazard is present on floors, interior windowsills, or window troughs, respectively, in at least one sampled residential unit on the property. A dust-lead hazard is present on floors, interior windowsills, or window troughs in an unsampled common area in a multifamily dwelling if a dust-lead hazard is present on floors, interior windowsills, or window troughs, respectively, in at least one sampled common area in the same common area group on the property.

"Dwelling unit" means a single, unified combination of rooms designed for use as a dwelling by one family.

"Emergency renovation, remodeling, or repainting" means renovation, remodeling, or repainting activities necessitated by nonroutine failures of equipment or a structure that were not planned but resulted from a sudden, unexpected event that, if not immediately attended to, presents a safety or public health hazard or threatens equipment or property with significant damage.

"Friction surface" means an interior or exterior surface that is subject to abrasion or friction including, but not limited to, certain window, floor, and stair surfaces.

"Hazardous lead-based paint" means lead-based paint that is present on a friction surface where there is evidence of abrasion or where the dust-lead level on the nearest horizontal surface underneath the friction surface (e.g., the windowsill or floor) is equal to or greater than the dust-lead hazard level, lead-based paint that is present on an impact surface that is damaged or otherwise deteriorated from impact, lead-based paint that is present on a chewable surface, or any other deteriorated lead-based paint in any residential building or child-occupied facility or on the exterior of any residential building or child-occupied facility.

"Housing for the elderly" means retirement communities or similar types of housing reserved for households composed of one or more persons 62 years of age or older or an age recognized as elderly by a specific federal housing assistance program.

"Impact surface" means an interior or exterior surface that is subject to damage by repeated sudden force such as certain parts of door frames.

"Lead-based paint" means paint or other surface coatings that contain lead equal to or in excess of 1.0 milligram per square centimeter or more than 0.5 percent by weight.

"Lead-based paint hazard" means hazardous lead-based paint, a dust-lead hazard, or a soil-lead hazard.

"Living area" means any area of a residential dwelling used by at least one child six years of age or less including, but not limited to, living rooms, kitchen areas, dens, playrooms, and children's bedrooms.

"Mid-yard" means an area of a residential yard approximately midway between the dripline of a residential building and the nearest property boundary or between the driplines of a residential building and another building on the same property.

"Multifamily dwelling" means a structure that contains more than one separate residential dwelling unit, which is used or occupied, or is intended to be used or occupied, in whole or in part, as the home or residence of one or more persons.

"Person" means individual, corporation, limited liability company, government or governmental subdivision or agency, business trust, estate, trust, partnership, or association, or any other legal entity.

"Play area" means an area of frequent soil contact by children of less than six years of age as indicated by, but not limited to, factors including the following: the presence of play equipment (sandboxes, swing sets, and sliding boards), toys, or other children's possessions, observations of play patterns, or information provided by parents, residents, caregivers, or property owners.

"Regulated entity" means any individual or company that is regulated by the department by virtue of these rules, the Iowa Code, or other official regulatory promulgation.

"Renovation, remodeling, repainting" means modifying any existing structure or portion of a structure where painted surfaces are disturbed, unless the activity fits the criteria of lead abatement as defined in 641—70.2(135) and is performed by a certified lead abatement contractor as defined in 641—70.2(135). This includes, but is not limited to, removing walls, ceilings, and other painted

building components; window replacement; floor refinishing; and sanding, scraping, stripping, water blasting, or otherwise removing paint.

"Residential dwelling" means (1) a detached single-family dwelling unit, including the surrounding yard, attached structures such as porches and stoops, and detached buildings and structures including, but not limited to, garages, farm buildings, and fences, or (2) a single-family dwelling unit in a structure that contains more than one separate residential dwelling unit, which is used or occupied, or intended to be used or occupied, in whole or part, as the home or residence of one or more persons.

"Soil-lead hazard" means bare soil on residential real property or on the property of a child-occupied facility that contains total lead in excess of 400 parts per million for the dripline, mid-yard, and play areas. A soil-lead hazard is present in a dripline, mid-yard, or play area when the soil-lead concentration from a composite sample of bare soil is equal to or greater than 400 parts per million.

"Target housing" means housing constructed prior to 1978 with the exception of housing for the elderly or for persons with disabilities, unless at least one child under the age of six years resides or is expected to reside in the housing, and housing which does not contain a bedroom.

[**ARC 8501B**, IAB 2/10/10, effective 1/13/10]

641—69.3(135) Notification required in target housing. A person who performs renovation, remodeling, or repainting of target housing for compensation, except for emergency renovation, remodeling, or repainting of target housing, and except for minor repair and maintenance activities that disrupt less than 1.0 square feet of painted surface, must do the following prior to commencing the work:

69.3(1) Provide the pamphlet, Lead Poisoning: How to Protect Iowa Families, or the federal pamphlet, Renovate Right, to the owner and adult occupant of each dwelling unit where renovation, remodeling, or repainting will be performed. The pamphlet shall be provided no more than 60 days prior to commencing the work.

69.3(2) Obtain a signed, dated acknowledgment from the owner and known adult occupant of each dwelling unit where renovation, remodeling, or repainting will be performed affirming that they have received the pamphlet prior to the start of renovation, remodeling, or repainting and are aware of the potential health hazards from remodeling, renovating, or repainting housing containing lead-based paint. The acknowledgment shall be obtained no more than 60 days prior to commencing the work.

a. The acknowledgment shall include the owner's and occupant's names and the address of the residential dwelling undergoing renovation, remodeling, or repainting.

b. The acknowledgment shall include the following language:

> I have received the pamphlet entitled Lead Poisoning: How to Protect Iowa Families or the federal pamphlet, Renovate Right, prior to the start of renovation, remodeling, or repainting and am aware of the potential health risk associated with remodeling, renovating, or repainting housing containing lead-based paint or lead-based paint hazards.

c. Below the statement, the acknowledgment shall require the signature of the owner and occupant, along with their dates of signature.

d. If a signature cannot be obtained from an adult occupant, the person must certify in writing that the pamphlet has been delivered to the dwelling and that a written acknowledgment could not be obtained from an adult occupant. Such certification must include the address of the unit to be remodeled, renovated, or repainted, the date and method of delivery of the pamphlet, the name of the person delivering the pamphlet, the reason for lack of acknowledgment (e.g., occupant refuses to sign, no adult occupant available), the signature of the person conducting the renovation, remodeling, or repainting, and the date of signature.

e. The type shall be clear and legible.

f. The acknowledgment may be included as a separate sheet or as a part of any written contract or service agreement. The acknowledgment must be completed prior to commencing the work.

g. If the parties use a written contract or agreement which is written in a language other than English, the acknowledgment text shall be written in the same language as the text of the contract or agreement.

69.3(3) In lieu of delivering the pamphlet and written acknowledgment, the person conducting the renovation, remodeling, or repainting may obtain a certificate of mailing the pamphlet and written acknowledgment at least seven days prior to beginning the work.

69.3(4) If the general nature, location, and expected starting and ending dates of the planned renovation, remodeling, or repainting change after the initial notification has been conducted, the person conducting the renovation, remodeling, or repainting shall provide further notification to the owners and occupants providing revised information on the ongoing or planned activities. This subsequent notification must be provided before the person conducting the renovation, remodeling, or repainting initiates work beyond that which was described in the original notice.

[**ARC 8501B**, IAB 2/10/10, effective 1/13/10]

641—69.4(135) Notification required in multifamily housing. A person who performs renovation, remodeling, or repainting of common areas for compensation, except for emergency renovation, remodeling, or repainting of target housing, and except for minor repair and maintenance activities that disrupt less than 1.0 square feet of painted surface, must do the following prior to commencing the work:

69.4(1) Provide the pamphlet, Lead Poisoning: How to Protect Iowa Families, or the federal pamphlet, Renovate Right, to the owner of the multifamily target housing where renovation, remodeling, or repainting will be performed. The pamphlet shall be provided no more than 60 days prior to commencing the work.

69.4(2) Obtain a signed, dated acknowledgment from the owner of the multifamily target housing where renovation, remodeling, or repainting will be performed affirming that the owner has received the pamphlet prior to the start of renovation, remodeling, or repainting and is aware of the potential health hazards from remodeling, renovating, or repainting housing containing lead-based paint. The acknowledgment shall be obtained no more than 60 days prior to commencing the work.

a. The acknowledgment shall include the owner's name and the address of the multifamily dwelling undergoing renovation, remodeling, or repainting.

b. The acknowledgment shall include the following language:

> I have received the pamphlet entitled Lead Poisoning: How to Protect Iowa Families or the federal pamphlet, Renovate Right, prior to the start of renovation, remodeling, or repainting and am aware of the potential health risk associated with remodeling, renovating, or repainting housing containing lead-based paint or lead-based paint hazards.

c. Below the statement, the acknowledgment shall require the signature of the owner, along with the date of signature.

d. The type shall be clear and legible.

e. The acknowledgment may be included as a separate sheet or as a part of any written contract or service agreement. The acknowledgment must be completed prior to commencing the work.

f. If the parties use a written contract or agreement which is written in a language other than English, the acknowledgment text shall be written in the same language as the text of the contract or agreement.

g. Notify each occupant of the multifamily housing, in writing, of the intended remodeling, repainting, or renovation, and make the pamphlet, Lead Poisoning: How to Protect Iowa Families, or the federal pamphlet, Renovate Right, available upon request. At a minimum, this notification shall be accomplished by distributing written notice to each occupant of the target housing. The notice shall describe:

(1) The general nature and location of the planned renovation, remodeling, or repainting activity.

(2) The expected starting and ending dates of the planned renovation, remodeling, or repainting activity.

(3) A statement of how the owners and occupants can obtain the pamphlet, Lead Poisoning: How to Protect Iowa Families, or the federal pamphlet, Renovate Right, at no charge from the person conducting the renovation, remodeling, or repainting activity.

h. These activities shall be conducted by the person planning to perform the renovation, remodeling, or repainting, or by the owner on behalf of this person.

i. The person planning to perform the renovation, remodeling, or repainting must prepare, sign, and date a statement describing the steps performed to notify all occupants of the intended renovation, remodeling, or repainting, and to provide the pamphlet, Lead Poisoning: How to Protect Iowa Families, or the federal pamphlet, Renovate Right, at no charge upon request. Regardless of who performs the notification activities required in this subrule, the person planning to conduct the renovation, remodeling, or repainting shall be responsible for ensuring compliance with this subrule and shall be liable for any failures to comply with the notification requirements in this subrule.

69.4(3) In lieu of delivering the pamphlet and written acknowledgment to the owner, the person conducting the renovation, remodeling, or repainting may obtain a certificate of mailing the pamphlet and written acknowledgment at least seven days prior to beginning the work.

69.4(4) If the general nature, location, and expected starting and ending dates of the planned renovation, remodeling, or repainting change after the initial notification has been conducted, the person conducting the renovation, remodeling, or repainting shall provide further notification to the owners and occupants providing revised information on the ongoing or planned activities. This subsequent notification must be provided before the person conducting the renovation, remodeling, or repainting initiates work beyond that which was described in the original notice.

[**ARC 8501B**, IAB 2/10/10, effective 1/13/10]

641—69.5(135) Emergency renovation, remodeling, or repainting in target housing. A person who performs emergency renovation, remodeling, or repainting of target housing for compensation, except for minor repair and maintenance activities that disrupt less than 1.0 square feet of painted surface, must do the following as soon as reasonably possible:

69.5(1) Provide the pamphlet, Lead Poisoning: How to Protect Iowa Families, or the federal pamphlet, Renovate Right, to the owner of the target housing where renovation, remodeling, or repainting is performed.

69.5(2) Notify each owner and occupant of the target housing, in writing, of the remodeling, repainting, or renovation, and make the pamphlet, Lead Poisoning: How to Protect Iowa Families, or the federal pamphlet, Renovate Right, available upon request. At a minimum, this notification shall be accomplished by distributing written notice to each owner and occupant of the target housing. The notice shall describe:

a. The general nature and location of the renovation, remodeling, or repainting activity.

b. The starting and ending dates of the renovation, remodeling, or repainting activity.

c. A statement of how the owners and occupants can obtain the pamphlet, Lead Poisoning: How to Protect Iowa Families, or the federal pamphlet, Renovate Right, at no charge from the person conducting the renovation, remodeling, or repainting activity.

69.5(3) These activities shall be conducted by the person performing the renovation, remodeling, or repainting, or by the owner on behalf of this person. The person planning to perform the renovation, remodeling, or repainting must prepare, sign, and date a statement describing the steps performed to notify all occupants of the intended renovation, remodeling, or repainting, and to provide the pamphlet, Lead Poisoning: How to Protect Iowa Families, or the federal pamphlet, Renovate Right, at no charge upon request. Regardless of who performs the notification activities required in this rule, the person conducting the renovation, remodeling, or repainting shall be responsible for ensuring compliance with this rule and shall be liable for any failures to comply with the notification requirements in this rule.

[**ARC 8501B**, IAB 2/10/10, effective 1/13/10]

641—69.6(135) Certification of attempted delivery in target housing. When an adult occupant is unavailable for signature or refuses to sign the acknowledgment of receipt of the pamphlet, the person conducting the renovation, remodeling, or repainting is permitted by subrule 69.3(2) to certify delivery for each instance. The certification shall include the address of the unit undergoing renovation, remodeling, or repainting, the date and method of delivery of the pamphlet, name of the person delivering the pamphlet, reason for lack of acknowledgment (e.g., occupant refuses to sign, no adult occupant available), the signature of the person conducting the renovation, remodeling, or repainting, and the date of signature.

69.6(1) *Unavailable for signature.*

a. If an adult occupant is unavailable for signature, the certification shall contain the following language:

> I certify that I have made a good-faith effort to deliver the pamphlet, Lead Poisoning: How to Protect Iowa Families, or the federal pamphlet, Renovate Right, to the unit listed below at the dates and times indicated, and that an adult occupant was unavailable to sign the acknowledgment. I further certify that I have left a copy of the pamphlet at the unit with the occupant.

b. Below the statement, the certification shall require the printed name and signature of the person conducting the renovation, remodeling, or repainting, the address of the unit, the attempted delivery dates and times, and the date of signature.

69.6(2) *Refused to sign.*

a. If the occupant refuses to sign the acknowledgment, the certification shall contain the following language:

> I certify that I have made a good-faith effort to deliver the pamphlet, Lead Poisoning: How to Protect Iowa Families, or the federal pamphlet, Renovate Right, to the unit listed below at the dates and times indicated, and that the occupant refused to sign the acknowledgment. I further certify that I have left a copy of the pamphlet at the unit.

b. Below the statement, the certification shall require the printed name and signature of the person conducting the renovation, remodeling, or repainting, the address of the unit, the attempted delivery dates and times, the location where the pamphlet was left at the unit (e.g., taped to the door, slipped under the door), and the date of signature.

[**ARC 8501B**, IAB 2/10/10, effective 1/13/10]

641—69.7(135) Notification required in child-occupied facilities. A person who performs renovation, remodeling, or repainting of child-occupied facilities for compensation, except for emergency renovation, remodeling, or repainting of child-occupied facilities, and except for minor repair and maintenance activities that disrupt less than 1.0 square feet of painted surface, must do the following prior to commencing the work:

69.7(1) Provide the pamphlet, Lead Poisoning: How to Protect Iowa Families, or the federal pamphlet, Renovate Right, to the owner of the building where renovation, remodeling, or repainting will be performed. The pamphlet shall be provided no more than 60 days prior to commencing the work.

69.7(2) Obtain a signed, dated acknowledgment from the owner of the building where renovation, remodeling, or repainting will be performed affirming that the owner has received the pamphlet prior to the start of renovation, remodeling, or repainting and is aware of the potential health hazards from remodeling, renovating, or repainting buildings containing lead-based paint. The acknowledgment shall be obtained no more than 60 days prior to commencing the work.

a. The acknowledgment shall include the owner's name and the address of the child-occupied facility undergoing renovation, remodeling, or repainting.

b. The acknowledgment shall include the following language:

> I have received the pamphlet entitled Lead Poisoning: How to Protect Iowa Families or the federal pamphlet, Renovate Right, prior to the start of renovation, remodeling, or repainting and am aware of the potential health risk associated with remodeling, renovating, or repainting buildings containing lead-based paint or lead-based paint hazards.

c. Below the statement, the acknowledgment shall require the signature of the owner along with the date of signature.

d. If a signature cannot be obtained from the owner, the person must certify in writing that the pamphlet has been delivered to the building and that a written acknowledgment could not be obtained from an owner. Such certification must include the address of the building to be remodeled, renovated, or repainted, the date and method of delivery of the pamphlet, the name of the person delivering the

pamphlet, the reason for lack of acknowledgment (e.g., owner refuses to sign, owner not available), the signature of the person conducting the renovation, remodeling, or repainting, and the date of signature.

e. The type shall be clear and legible.

f. The acknowledgment may be included as a separate sheet or as a part of any written contract or service agreement. The acknowledgment must be completed prior to commencing the work.

g. If the parties use a written contract or agreement which is written in a language other than English, the acknowledgment text shall be written in the same language as the text of the contract or agreement.

69.7(3) In lieu of delivering the pamphlet and written acknowledgment, the person conducting the renovation, remodeling, or repainting may obtain a certificate of mailing the pamphlet and written acknowledgment to the owner at least 7 days prior to beginning the work.

69.7(4) If the general nature, location, and expected starting and ending dates of the planned renovation, remodeling, or repainting change after the initial notification has been conducted, the person conducting the renovation, remodeling, or repainting shall provide further notification to the owners providing revised information on the ongoing or planned activities. This subsequent notification must be provided before the person conducting the renovation, remodeling, or repainting initiates work beyond that which was described in the original notice.

69.7(5) If the operator of the child-occupied facility is not the owner of the building, provide the pamphlet, Lead Poisoning: How to Protect Iowa Families, or the federal pamphlet, Renovate Right, to the operator of the child-occupied facility where renovation, remodeling, or repainting will be performed. The pamphlet shall be provided no more than 60 days prior to commencing the work.

69.7(6) If the operator of the child-occupied facility is not the owner of the building, obtain a signed, dated acknowledgment from the operator of the child-occupied facility where renovation, remodeling, or repainting will be performed affirming that the operator has received the pamphlet prior to the start of renovation, remodeling, or repainting and is aware of the potential health hazards from remodeling, renovating, or repainting buildings containing lead-based paint. The acknowledgment shall be obtained no more than 60 days prior to commencing the work.

a. The acknowledgment shall include the name of the operator of the child-occupied facility and the address of the child-occupied facility undergoing renovation, remodeling, or repainting.

b. The acknowledgment shall include the following language:

> I have received the pamphlet entitled Lead Poisoning: How to Protect Iowa Families or the federal pamphlet, Renovate Right, prior to the start of renovation, remodeling, or repainting and am aware of the potential health risk associated with remodeling, renovating, or repainting buildings containing lead-based paint or lead-based paint hazards.

c. Below the statement, the acknowledgment shall require the signature of the operator of the child-occupied facility along with the date of signature.

d. If a signature cannot be obtained from the operator of the child-occupied facility, the person must certify in writing that the pamphlet has been delivered to the building and that a written acknowledgment could not be obtained from the operator of the child-occupied facility. Such certification must include the address of the building to be remodeled, renovated, or repainted, the date and method of delivery of the pamphlet, the name of the person delivering the pamphlet, the reason for lack of acknowledgment (e.g., operator of the child-occupied facility refuses to sign, operator of the child-occupied facility not available), the signature of the person conducting the renovation, remodeling, or repainting, and the date of signature.

e. The type shall be clear and legible.

f. The acknowledgment may be included as a separate sheet or as a part of any written contract or service agreement. The acknowledgment must be completed prior to commencing the work.

g. If the parties use a written contract or agreement which is written in a language other than English, the acknowledgment text shall be written in the same language as the text of the contract or agreement.

69.7(7) In lieu of delivering the pamphlet and written acknowledgment, the person conducting the renovation, remodeling, or repainting may obtain a certificate of mailing the pamphlet and written acknowledgment to the operator of the child-occupied facility at least 7 days prior to beginning the work.

69.7(8) If the general nature, location, and expected starting and ending dates of the planned renovation, remodeling, or repainting change after the initial notification has been conducted, the person conducting the renovation, remodeling, or repainting shall provide further notification to the operator of the child-occupied facility providing revised information on the ongoing or planned activities. This subsequent notification must be provided before the person conducting the renovation, remodeling, or repainting initiates work beyond that which was described in the original notice.

69.7(9) Provide the pamphlet, Lead Poisoning: How to Protect Iowa Families, or the federal pamphlet, Renovate Right, and information regarding the general nature and locations of the renovation, remodeling, or repainting and the anticipated completion date to the parents and guardians of children using the child-occupied facility where renovation, remodeling, or repainting will be performed. The pamphlet and information shall be provided no more than 60 days prior to commencing the work. The person conducting the renovation, remodeling, or repainting shall provide this information using one of the following methods:

a. Mail or hand-deliver the pamphlet and information to each parent or guardian of each child using the child-occupied facility (the pamphlet and information may not be sent home with the child); or

b. While the renovation, remodeling, or repainting is ongoing, post informational signs describing the general nature and locations of the renovation, remodeling, or repainting and the anticipated completion date. These signs must be posted in areas where they can be seen by the parents of the children frequenting the child-occupied facility. The signs must be accompanied by a posted copy of the pamphlet or information on how interested parents or guardians can review a copy of the pamphlet or obtain a copy from the person conducting the renovation, remodeling, or repainting at no cost to the parents or guardians.

69.7(10) The activities in subrule 69.7(9) shall be conducted by the person planning to perform the renovation, remodeling, or repainting or by the owner or operator of the child-occupied facility on behalf of this person. Regardless of who performs the notification activities required in subrule 69.7(9), the person conducting the renovation, remodeling, or repainting shall be responsible for ensuring compliance with this rule and shall be liable for any failures to comply with the notification requirements in this rule.

69.7(11) The person conducting the renovation, remodeling, or repainting shall prepare, sign, and date a statement describing the steps performed to notify all parents and guardians of the intended renovation, remodeling, or repainting and to provide the pamphlet to them.

69.7(12) If the general nature, location, and expected starting and ending dates of the planned renovation, remodeling, or repainting change after the initial notification has been conducted, the person conducting the renovation, remodeling, or repainting shall provide revised information on the ongoing or planned activities to the parents and guardians of children frequenting the child-occupied facility providing revised information on the ongoing or planned activities. This subsequent notification must be provided before the person conducting the renovation, remodeling, or repainting initiates work beyond that which was described in the original notice.

[**ARC 8501B**, IAB 2/10/10, effective 1/13/10]

641—69.8(135) Emergency renovation, remodeling, or repainting in child-occupied facilities. A person who performs emergency renovation, remodeling, or repainting of child-occupied facilities for compensation, except for minor repair and maintenance activities that disrupt less than 1.0 square feet of painted surface, must do the following as soon as reasonably possible:

69.8(1) Provide the pamphlet, Lead Poisoning: How to Protect Iowa Families, or the federal pamphlet, Renovate Right, to the owner of the building where renovation, remodeling, or repainting is performed.

69.8(2) Notify each owner and, if different, the operator of the child-occupied facility, in writing, of the remodeling, repainting, or renovation, and make the pamphlet, Lead Poisoning: How to Protect

Iowa Families, or the federal pamphlet, Renovate Right, available upon request. At a minimum, this notification shall be accomplished by distributing written notice to each owner and, if different, operator of the child-occupied facility. The notice shall describe:

a. The general nature and location of the renovation, remodeling, or repainting activity.

b. The starting and ending dates of the renovation, remodeling, or repainting activity.

c. A statement of how each owner and, if different, the operator of the child-occupied facility can obtain the pamphlet, Lead Poisoning: How to Protect Iowa Families, or the federal pamphlet, Renovate Right, at no charge from the person conducting the renovation, remodeling, or repainting activity.

69.8(3) Provide the pamphlet, Lead Poisoning: How to Protect Iowa Families, or the federal pamphlet, Renovate Right, and information regarding the general nature and locations of the renovation, remodeling, or repainting and the anticipated completion date to the parents and guardians of children using the child-occupied facility where renovation, remodeling, or repainting will be performed. The person conducting the renovation, remodeling, or repainting shall provide this information using one of the following methods:

a. Mail or hand-deliver the pamphlet and information to each parent or guardian of each child using the child-occupied facility (the pamphlet and information may not be sent home with the child); or

b. While the renovation, remodeling, or repainting is ongoing, post informational signs describing the general nature and locations of the renovation, remodeling, or repainting and the anticipated completion date. These signs must be posted in areas where they can be seen by the parents or guardians of the children frequenting the child-occupied facility. The signs must be accompanied by a posted copy of the pamphlet or information on how interested parents or guardians can review a copy of the pamphlet or obtain a copy from the person conducting the renovation, remodeling, or repainting at no cost to the parents or guardians.

69.8(4) The activities in subrule 69.8(3) shall be conducted by the person planning to perform the renovation, remodeling, or repainting or by the owner or operator of the child-occupied facility on behalf of this person. Regardless of who performs the notification activities required in subrule 69.8(3), the person conducting the renovation, remodeling, or repainting shall be responsible for ensuring compliance with this rule and shall be liable for any failures to comply with the notification requirements in this rule.
[**ARC 8501B**, IAB 2/10/10, effective 1/13/10]

641—69.9(135) Certification of attempted delivery for child-occupied facilities. When the owner and, if different, operator of a child-occupied facility are unavailable for signature or refuse to sign the acknowledgment of receipt of the pamphlet, the person conducting the renovation, remodeling, or repainting is permitted by subrule 69.3(2) to certify delivery for each instance. The certification shall include the address of the child-occupied facility undergoing renovation, remodeling, or repainting, the date and method of delivery of the pamphlet, name of the person delivering the pamphlet, reason for lack of acknowledgment (e.g., owner and, if different, operator refuse to sign), the signature of the individual conducting the renovation, remodeling, or repainting, and the date of signature.

69.9(1) *Unavailable for signature.*

a. If the owner and, if different, operator of the child-occupied facility are unavailable for signature, the certification shall contain the following language:

> I certify that I have made a good-faith effort to deliver the pamphlet, Lead Poisoning: How to Protect Iowa Families, or the federal pamphlet, Renovate Right, to the child-occupied facility listed below at the dates and times indicated, and that the owner and, if different, operator of the child-occupied facility were unavailable to sign the acknowledgment. I further certify that I have left a copy of the pamphlet at the child-occupied facility with the owner and, if different, operator.

b. Below the statement, the certification shall require the printed name and signature of the person conducting the renovation, remodeling, or repainting, the address of the child-occupied facility, the attempted delivery dates and times, and the date of signature.

69.9(2) *Refused to sign.*

a. If the owner and, if different, operator refuse to sign the acknowledgment, the certification shall contain the following language:

> I certify that I have made a good-faith effort to deliver the pamphlet, Lead Poisoning: How to Protect Iowa Families, or the federal pamphlet, Renovate Right, to the child-occupied facility listed below at the dates and times indicated, and that the owner and, if different, operator refused to sign the acknowledgment. I further certify that I have left a copy of the pamphlet at the child-occupied facility.

b. Below the statement, the certification shall require the printed name and signature of the person conducting the renovation, remodeling, or repainting, the address of the child-occupied facility, the attempted delivery dates and times, the location where the pamphlet was left at the child-occupied facility (e.g., taped to the door, slipped under the door), and the date of signature.

[**ARC 8501B**, IAB 2/10/10, effective 1/13/10]

641—69.10(135) Subcontracts. In cases where renovation, remodeling, or repainting activities involve subcontracts, it is the responsibility of the person receiving the compensation from the property owner, or other party on behalf of the property owner, to provide the notification(s) described in 641—69.3(135), 641—69.4(135), 641—69.5(135), and 641—69.6(135) of this chapter.

[**ARC 8501B**, IAB 2/10/10, effective 1/13/10]

641—69.11(135) Exemption. Renovation, remodeling, or repainting in target housing or a child-occupied facility in which a lead inspector/risk assessor or elevated blood lead (EBL) inspector/risk assessor certified pursuant to 641—Chapter 70 has made a written determination that the components affected by the renovation are free of lead-based paint and where the person conducting the renovation, remodeling, or repainting has obtained a copy of the written determination is exempt from the provisions of 641—Chapter 69.

[**ARC 8501B**, IAB 2/10/10, effective 1/13/10]

641—69.12(135) Record-keeping requirements. A person who conducts renovation, remodeling, or repainting for compensation in target housing or a child-occupied facility shall retain all records necessary to demonstrate compliance with this chapter for a minimum of three years following completion of the renovation, remodeling, or repainting. The records shall include:

69.12(1) The address or location of the target housing or child-occupied facility where remodeling, renovation, or repainting was conducted.

69.12(2) A list of all known occupants of the dwelling units where renovation, remodeling, or repainting was conducted at the commencement of the work.

69.12(3) Copies of signed, dated acknowledgments as required by subrule 69.3(2) from each owner and occupant of a dwelling unit where renovation, remodeling, or repainting was conducted.

69.12(4) Copies of signed, dated acknowledgments as required by subrule 69.4(2) from each owner of multifamily target housing where renovation, remodeling, or repainting was conducted in common areas.

69.12(5) Copies of all signed, dated statements of notification, as well as copies of all notification materials given to all owners and occupants and acknowledgments as required by subrule 69.4(2) from each owner and occupant of multifamily target housing where renovation, remodeling, or repainting was conducted in common areas.

69.12(6) Copies of signed, dated acknowledgments as required by 641—69.7(135) from the owner and, if different, operator of a child-occupied facility where renovation, remodeling, or repainting was conducted.

69.12(7) Copies of all notification materials given to the parents or guardians of children using a child-occupied facility or the signs posted in areas where the signs can be seen by the parents or guardians of children using the child-occupied facility as required by subrule 69.7(9).

69.12(8) Reports showing that a lead inspector/risk assessor or elevated blood level (EBL) inspector/risk assessor certified pursuant to 641—Chapter 70 has made a written determination that the components affected by the renovation are free of lead-based paint.

69.12(9) Certifications of attempted delivery as described in 641—69.6(135).

69.12(10) Certificates of mailing as described in subrules 69.3(3) and 69.4(3).

[**ARC 8501B**, IAB 2/10/10, effective 1/13/10]

641—69.13(135) Compliance inspections. The department may enter the place of business of a person who conducts renovation, remodeling, or repainting for the purpose of enforcing the notification required by this chapter.

[**ARC 8501B**, IAB 2/10/10, effective 1/13/10]

641—69.14(135) Enforcement.

69.14(1) The department may impose a civil penalty pursuant to Iowa Code section 135.105C and this rule and may refer the case to the office of the county attorney for possible criminal penalties pursuant to Iowa Code section 135.38 when it finds that a person has committed any of the following acts:

a. Failed or refused to comply with any requirements of this chapter.

b. Failed or refused to establish, maintain, provide, copy, or permit access to records or reports as required by this chapter.

c. Failed or refused to permit entry or inspection as described in subrule 69.14(1).

d. Falsified reports and records required by this chapter.

e. Failed to comply with the terms of a department order or the terms of a settlement agreement or consent order.

f. Failed to respond within 20 days of receipt of communication sent by the department by registered or certified mail.

g. Engaged in any conduct that subverts or attempts to subvert a department investigation.

h. Failed to comply with a subpoena issued by the department or failed to cooperate with a department investigation.

i. Failed to pay costs assessed in any disciplinary action.

69.14(2) Complaints and other requests for action under this rule. Complaints regarding a person who performs renovation, remodeling, or repainting for compensation in target housing or a child-occupied facility shall be submitted in writing to the Iowa Department of Public Health, Lead Poisoning Prevention Program, 321 East 12th Street, Des Moines, Iowa 50319-0075. The complainant shall provide the name of the person who performs renovation, remodeling, or repainting for compensation in target housing or a child-occupied facility and the specific details of the person's action(s) that did not comply with the rules.

69.14(3) Civil penalties.

a. Before instituting any proceeding to impose a civil penalty under Iowa Code section 135.105C, the department shall serve a written notice of violation upon the person charged. The notice of violation shall specify the date or dates, facts, and the nature of the alleged act or omission with which the person is charged and shall identify specifically the particular provision or provisions of the law, rule, regulation, or cease and desist order involved in the alleged violation and must state the amount of each proposed penalty. The notice of violation shall also advise the person charged that the civil penalty may be paid in the amount specified therein, or the proposed imposition of the civil penalty may be protested in its entirety or in part, by a written answer, either denying the violation or showing extenuating circumstances. The notice of violation shall advise the person charged that upon failure to pay a civil penalty subsequently determined by the department, if any, unless compromised, remitted, or mitigated, the fee shall be collected by civil action pursuant to Iowa Code section 135.105C.

b. Within 20 days of the date of a notice of violation or other time specified in the notice, the person charged may either pay the penalty in the amount proposed or answer the notice of violation. The answer to the notice of violation shall state any facts, explanations, and arguments denying the charges of violation or demonstrating any extenuating circumstances, error in the notice of violation, or other reason why the penalty should not be imposed and may request remission or mitigation of the penalty.

c. If the person charged with a violation fails to answer within the time specified in paragraph 69.14(3)*"b,"* an order may be issued imposing the civil penalty in the amount set forth in the notice of violation described in paragraph 69.14(3)*"a."*

d. If the person charged with a violation files an answer to the notice of violation, the department, upon consideration of the answer, will issue an order dismissing the proceeding or imposing, mitigating, or remitting the civil penalty. The person charged may, within 20 days of the date of the order or other time specified in the order, request a hearing.

e. If the person charged with a violation requests a hearing, the department will issue an order designating the time and place of hearing. The hearing shall be conducted according to the procedural rules of the department of inspections and appeals found in 481—Chapter 10, Iowa Administrative Code.

f. If a hearing is held, an order will be issued after the hearing by the presiding officer or the department dismissing the proceeding or imposing, mitigating, or remitting the civil penalty.

g. The department may compromise any civil penalty. If the civil penalty is not compromised or is not remitted by the presiding officer or the department or if the time for requesting a hearing described in paragraph 69.14(3)*"d"* has expired, the department may refer the matter to the attorney general for collection.

h. Except when payment is made after compromise or mitigation by the department of justice or as ordered by a court of the state, following reference of the matter to the attorney general for collection, payment of civil penalties imposed under Iowa Code section 135.105C shall be made by check, draft, or money order payable to the Iowa Department of Public Health.

69.14(4) Appeals.

a. Notice of the civil penalty shall be sent to the affected person by certified mail, return receipt requested, or by personal service. The affected person shall have a right to appeal the civil penalty.

b. An appeal of a civil penalty shall be submitted by certified mail, return receipt requested, to the Iowa Department of Public Health, Lead Poisoning Prevention Program, 321 East 12th Street, Des Moines, Iowa 50319-0075, within 20 days of receipt of the department's notice. If such a request is made within the 20-day time period, the notice of civil penalty shall be deemed to be suspended. Prior to or at the hearing, the department may rescind the notice upon satisfaction that the reason for the civil penalty has been or will be removed. After the hearing, or upon default of the applicant or alleged violator, the administrative law judge shall affirm, modify or set aside the civil penalty. If no appeal is submitted within 20 days, the civil penalty shall become the department's final agency action.

c. Upon receipt of an appeal that meets contested case status, the appeal shall be transmitted to the department of inspections and appeals within 5 working days of receipt pursuant to the rules adopted by that agency regarding the transmission of contested cases. The information upon which the civil penalty is based shall be provided to the department of inspections and appeals.

d. The hearing shall be conducted according to the procedural rules of the department of inspections and appeals found in 481—Chapter 10, Iowa Administrative Code.

e. When the administrative law judge makes a proposed decision and order, it shall be served by restricted certified mail, return receipt requested, or delivered by personal service. The proposed decision and order then becomes the department's final agency action without further proceedings 10 days after it is received by the aggrieved party unless an appeal to the director is taken as provided in paragraph 69.14(4)*"f."*

f. Any appeal to the director for review of the proposed decision and order of the administrative law judge shall be filed in writing and mailed to the director by certified mail, return receipt requested, or delivered by personal service within 10 days after the receipt of the administrative law judge's proposed decision and order by the aggrieved party. A copy of the appeal shall also be mailed to the administrative law judge. Any request for appeal shall state the reason for appeal.

g. Upon receipt of an appeal request, the administrative law judge shall prepare the record of the hearing or submission to the director. The record shall include the following:

(1) All pleadings, motions, and rulings.

(2) All evidence received or considered and all other submissions by recording or transcript.

(3) A statement of all matters officially noticed.

(4) All questions and offers of proof, objection, and rulings thereon.

(5) All proposed findings and exceptions.

(6) The proposed findings and order of the administrative law judge.

h. The decision and order of the director becomes the department's final agency action upon receipt by the aggrieved party and shall be delivered by restricted certified mail, return receipt requested, or by personal service.

i. It is not necessary to file an application for a rehearing to exhaust administrative remedies when appealing to the director or the district court as provided in Iowa Code section 17A.19. The aggrieved party to the final agency action of the department who has exhausted all administrative remedies may petition for judicial review of that action pursuant to Iowa Code chapter 17A.

j. Any petition for judicial review of a decision and order shall be filed in the district court within 20 days after the decision and order becomes final. A copy of the notice of appeal shall be sent by certified mail, return receipt requested, or by personal service to the Iowa Department of Public Health, Lead Poisoning Prevention Program, 321 East 12th Street, Des Moines, Iowa 50319-0075.

k. The party who appeals a final agency action to the district court shall pay the cost of the preparation of a transcript of the contested case hearing for the district court.

[**ARC 8501B**, IAB 2/10/10, effective 1/13/10]

641—69.15(135) Waivers. Rules in this chapter are not subject to waiver or variance pursuant to 641—Chapter 178 or any other provision of law.

[**ARC 8501B**, IAB 2/10/10, effective 1/13/10]

These rules are intended to implement Iowa Code section 135.105C.

[Filed 1/23/98, Notice 10/22/97—published 2/11/98, effective 3/19/98]

[Filed 11/10/98, Notice 9/9/98—published 12/2/98, effective 1/6/99]

[Filed 9/14/01, Notice 8/8/01—published 10/3/01, effective 11/7/01]

[Filed 3/12/04, Notice 2/4/04—published 3/31/04, effective 5/5/04]

[Filed emergency 7/13/05 after Notice 5/25/05—published 8/3/05, effective 7/13/05]

[Filed Emergency After Notice ARC 8501B (Notice ARC 8355B, IAB 12/2/09), IAB 2/10/10, effective 1/13/10]

CHAPTER 70
LEAD-BASED PAINT ACTIVITIES

641—70.1(135) Applicability. This chapter applies to all persons who are lead professionals in Iowa, all firms that perform lead professional activities in Iowa, and training providers that offer training for lead professionals. This chapter requires lead professionals and firms to be certified and establishes specific requirements for how lead-based paint activities must be performed if a property owner, manager, or occupant chooses to undertake them. However, nothing in this chapter requires a property owner, manager, or occupant to undertake any particular lead-based paint activity. This chapter also provides for the approval of courses that provide training for lead professionals.
[**ARC 8502B**, IAB 2/10/10, effective 1/13/10]

641—70.2(135) Definitions.

"Adequate quality control" means a plan or design which ensures the authenticity, integrity, and accuracy of samples, including dust, soil, and paint chip or paint film samples. Adequate quality control also includes provisions for representative sampling.

"Approved course" means a course that has been approved by the department for the training of lead professionals.

"Approved lead-safe work practices training program" means a lead-safe work practices training program that has been approved by the department.

"Arithmetic mean" means the algebraic sum of data values divided by the number of data values. For example, the sum of the concentration of lead in several soil samples divided by the number of samples is the arithmetic mean.

"Certified elevated blood lead (EBL) inspection agency" means an agency that has met the requirements of 641—70.5(135) and that has been certified by the department.

"Certified elevated blood lead (EBL) inspector/risk assessor" means a person who has met the requirements of 641—70.5(135) for certification or interim certification and who has been certified by the department.

"Certified firm" means a firm that employs certified lead professionals and has met the requirements of 641—70.7(135) for certification and has been certified by the department.

"Certified lead abatement contractor" means a person who has met the requirements of 641—70.5(135) for certification or interim certification and who has been certified by the department.

"Certified lead abatement worker" means a person who has met the requirements of 641—70.5(135) and who has been certified by the department.

"Certified lead inspector/risk assessor" means a person who has met the requirements of 641—70.5(135) for certification or interim certification and who has been certified by the department.

"Certified lead professional" means a person who has been certified by the department as a lead inspector/risk assessor, elevated blood lead (EBL) inspector/risk assessor, lead abatement contractor, lead abatement worker, project designer, sampling technician, or lead-safe renovator.

"Certified lead-safe renovator" means a person who has met the requirements of 641—70.5(135) for certification and who has been certified by the department.

"Certified project designer" means a person who has met the requirements of 641—70.5(135) for certification or interim certification and who has been certified by the department.

"Certified sampling technician" means a person who has met the requirements of 641—70.5(135) and who has been certified by the department.

"Chewable surface" means an interior or exterior surface painted with lead-based paint that a young child can mouth or chew.

"Child-occupied facility" means a building, or portion of a building, constructed prior to 1978, that is described by all of the following: (1) The building is visited on a regular basis by the same child, who is less than six years of age, on at least two different days within any week. For purposes of this chapter, a week is a Sunday through Saturday period. (2) Each day's visit by the child lasts at least 3 hours, and the combined annual visits total at least 60 hours. A child-occupied facility may include, but

is not limited to a child care center, preschool, or kindergarten classroom. A child-occupied facility also includes common areas that are routinely used by children who are less than six years of age, such as restrooms and cafeterias, and the exterior walls and adjoining space of the building that are immediately adjacent to the child-occupied facility or the common areas routinely used by children under the age of six years. "Child-occupied facility" also includes any building where lead-based paint activities are conducted immediately prior to or during the conversion of the building to a child-occupied facility.

"Cleaning verification card" means a card developed and distributed, or otherwise approved, by the U.S. Environmental Protection Agency (EPA) for the purpose of determining, through comparison of wet and dry disposable cleaning cloths with the card, whether postrenovation cleaning has been properly completed.

"Clearance level" means the value at which the amount of lead in dust on a surface following completion of interim controls, lead abatement, paint stabilization, standard treatments, ongoing lead-based paint maintenance, rehabilitation, or renovation is a dust-lead hazard and fails clearance testing. The clearance level for a single-surface dust sample from a floor is greater than or equal to 40 micrograms per square foot. The clearance level for a single-surface dust sample from an interior windowsill is greater than or equal to 250 micrograms per square foot. The clearance level for a single-surface dust sample from a window trough is greater than or equal to 400 micrograms per square foot.

"Clearance testing" means an activity conducted following interim controls, lead abatement, paint stabilization, standard treatments, ongoing lead-based paint maintenance, rehabilitation, or renovation to determine that the hazard reduction activities are complete. Clearance testing includes a visual assessment, the collection and analysis of environmental samples, the interpretation of sampling results, and the preparation of a report.

"Common area" means a portion of the building that is generally accessible to all occupants. This includes, but is not limited to, hallways, stairways, laundry and recreational rooms, porches, exteriors, playgrounds, community centers, garages, and boundary fences.

"Common area group" means a group of common areas that are similar in design, construction, and function. Common area groups include, but are not limited to, hallways, stairwells, and laundry rooms.

"Component" or *"building component"* means specific design or structural elements or fixtures of a building, residential dwelling, or child-occupied facility that are distinguished from each other by form, function, and location. These include, but are not limited to, interior components such as ceilings, crown moldings, walls, chair rails, doors, door trim, floors, fireplaces, radiators and other heating units, shelves, shelf supports, stair treads, stair risers, stair stringers, newel posts, railing caps, balustrades, windows and trim (including sashes, window heads, jambs, sills or stools and troughs), built-in cabinets, columns, beams, bathroom vanities, countertops, and air conditioners; and exterior components such as painted roofing, chimneys, flashing, gutters and downspouts, ceilings, soffits, fascias, rake boards, cornerboards, bulkheads, doors and door trim, fences, floors, joists, latticework, railings and railing caps, siding, handrails, stair risers and treads, stair stringers, columns, balustrades, windowsills or stools and troughs, casings, sashes and wells, and air conditioners. Each side of a door is considered a component within its respective room.

"Component type" means a group of like components constructed of the same substrate in the same multifamily housing. For example, "wood door" is a component type.

"Composite sample" means the collection of more than one sample of the same medium (e.g., dust, soil, or paint) from the same type of surface (e.g., floor, interior windowsill, or window trough) such that multiple samples can be analyzed as a single sample.

"Concentration" means the relative content of a specific substance contained within a larger mass, such as the amount of lead (in micrograms per grams or parts per million of weight) in a sample of soil or dust.

"Containment" means a system of temporary barriers to protect workers, residents, and the environment by controlling exposures to the dust-lead hazards and debris created during renovation or lead abatement.

"Course agenda" means an outline of the key topics to be covered during a training course, including the time allotted to teach each topic.

"Course test" means an evaluation of the overall effectiveness of the training which shall test the trainees' knowledge and retention of the topics covered during the course.

"Course test blueprint" means written documentation identifying the proportion of course test questions devoted to each major topic in the course curriculum.

"Department" means the Iowa department of public health.

"Deteriorated paint" means any interior or exterior paint or other coating that is cracking, flaking, chipping, peeling, or chalking, or any paint or coating located on an interior or exterior surface that is otherwise damaged or separated from the substrate of a building component.

"Discipline" means one of the specific types or categories of lead-based paint activities identified in this chapter for which individuals may receive training from approved courses and become certified by the department. For example, "lead inspector/risk assessor" is a discipline, and "lead-safe renovator" is a discipline.

"Distinct painting history" means the application history, as indicated by its visual appearance or a record of application, over time, of paint or other surface coatings to a component or room.

"Documented methodologies" means methods or protocols used to sample for the presence of lead in paint, dust, and soil.

"Dripline" means the area within three feet surrounding the perimeter of a building.

"Dry disposable cleaning cloth" means a commercially available dry, electrostatically charged, white disposable cloth designed to be used for cleaning hard surfaces such as uncarpeted floors or countertops.

"Dry sanding" means sanding a surface that is partially coated with paint or other surface coating without moisture and includes hand and mechanical methods of sanding.

"Dry scraping" means scraping a surface that is partially coated with paint or other surface coating without moisture and includes hand and mechanical methods of scraping.

"Dust-lead hazard" means surface dust in residential dwellings or child-occupied facilities that contains a mass-per-area concentration of lead greater than or equal to 40 micrograms per square foot on floors, 250 micrograms per square foot on interior windowsills, and 400 micrograms per square foot on window troughs based on wipe samples. A dust-lead hazard is present in a residential dwelling or child-occupied facility when the weighted arithmetic mean lead loading for all single-surface or composite samples of floors and interior windowsills is greater than or equal to 40 micrograms per square foot on floors, 250 micrograms per square foot on interior windowsills, and 400 micrograms per square foot on widow troughs based on wipe samples. A dust-lead hazard is present on floors, interior windowsills, or window troughs in an unsampled residential dwelling in a multifamily dwelling if a dust-lead hazard is present on floors, interior windowsills, or window troughs, respectively, in at least one sampled residential unit on the property. A dust-lead hazard is present on floors, interior windowsills, or window troughs in an unsampled common area in a multifamily dwelling if a dust-lead hazard is present on floors, interior windowsills, or window troughs, respectively, in at least one sampled common area in the same common area group on the property.

"Elevated blood lead (EBL) child" means any child who has had one venous blood lead level greater than or equal to 20 micrograms per deciliter or at least two venous blood lead levels of 15 to 19 micrograms per deciliter.

"Elevated blood lead (EBL) inspection" means an inspection to determine the sources of lead exposure for an elevated blood lead (EBL) child and the provision within ten working days of a written report explaining the results of the investigation to the property owner and occupant of the residential dwelling or child-occupied facility being inspected and to the parents of the elevated blood lead (EBL) child. A certified elevated blood lead (EBL) inspector/risk assessor shall not determine that a residential dwelling is free of lead-based paint as a result of an elevated blood lead (EBL) inspection.

"Elevated blood lead (EBL) inspection agency" means an agency that employs or contracts with individuals who perform elevated blood lead (EBL) inspections. Elevated blood lead (EBL) inspection agencies may also employ or contract with individuals who perform other lead-based paint activities.

"Emergency renovation" means renovation, remodeling, or repainting activities necessitated by nonroutine failures of equipment or of a structure that were not planned but resulted from a sudden, unexpected event that, if not immediately attended to, presents a safety or public health hazard or threatens equipment or property with significant damage. "Emergency renovation" includes interim controls, renovation, remodeling, or repainting activities that are conducted in response to an elevated blood lead (EBL) inspection.

"Encapsulant" means a substance that forms a barrier between lead-based paint and the environment using a liquid-applied coating (with or without reinforcement materials) or an adhesively bonded coating material.

"Encapsulation" means the application of an encapsulant.

"Enclosure" means the use of rigid, durable construction materials that are mechanically fastened to the substrate in order to act as a barrier between lead-based paint and the environment.

"Firm" means a company, partnership, corporation, sole proprietorship, individual doing business, association, or other business entity; a federal, state, tribal, or local government agency; or a nonprofit organization that performs or offers to perform lead-based paint activities.

"Friction surface" means an interior or exterior surface that is subject to abrasion or friction including, but not limited to, certain window, floor, and stair surfaces.

"Guest instructor" means an individual designated by the training program manager or principal instructor to provide instruction specific to the lecture, hands-on work activities, or work practice components of a course.

"Hands-on skills assessment" means an evaluation which tests the trainees' ability to satisfactorily perform the work practices and procedures identified in 641—70.6(135), as well as any other skill taught in a training course.

"Hazardous lead-based paint" means lead-based paint that is present on a friction surface where there is evidence of abrasion or where the dust-lead level on the nearest horizontal surface underneath the friction surface (e.g., the windowsill or floor) is greater than or equal to the dust-lead hazard level, lead-based paint that is present on an impact surface that is damaged or otherwise deteriorated from impact, lead-based paint that is present on a chewable surface, or any other deteriorated lead-based paint in any residential building or child-occupied facility or on the exterior of any residential building or child-occupied facility.

"Hazardous waste" means any waste as defined in 40 CFR 261.3.

"HEPA exhaust control" means a HEPA vacuum attached to the machine in such a manner that it captures the air, dust, and debris disturbed by the machine.

"HEPA vacuum" means a vacuum cleaner which has been designed, operated, and maintained with a high-efficiency particulate air (HEPA) filter as the last filtration stage. A HEPA filter is a filter that is capable of capturing particles of 0.3 microns with 99.97 percent efficiency. The vacuum cleaner must be designed, operated, and maintained so that all of the air drawn into the machine is expelled through the HEPA filter with none of the air leaking past it. A vacuum must have sufficient suction to capture the dust that must be collected. A vacuum that complies with ANSI/IESO Standard 4310-2009 for Portable High Efficiency Air Filtration Device Field Testing and Validation Standard as a Class 3, 4, or 5 device is considered a HEPA vacuum.

"Housing for the elderly" means retirement communities or similar types of housing reserved for households composed of one or more persons 62 years of age or older or an age recognized as elderly by a specific federal housing assistance program.

"Immediate family" means spouse, parents and grandparents, children and grandchildren, brothers and sisters, mother-in-law and father-in-law, brothers-in-law and sisters-in-law, daughters-in-law and sons-in-law, and adopted and step family members.

"Impact surface" means an interior or exterior surface that is subject to damage by repeated sudden force such as certain parts of door frames.

"Inconclusive classification" means any XRF reading falling within the inconclusive range on the performance characteristic sheet, including the boundary values defining the range.

"Interim controls" means a set of measures designed to temporarily reduce human exposure or likely exposure to lead-based paint hazards, including repairing deteriorated lead-based paint, specialized cleaning, maintenance, painting, temporary containment, ongoing monitoring of lead-based paint hazards or potential hazards, and the establishment and operation of management and resident education programs.

"Interior windowsill" means the portion of the horizontal window ledge that protrudes into the interior of the room.

"Lead abatement" means any measure or set of measures designed to permanently eliminate lead-based paint hazards in a residential dwelling or child-occupied facility. Lead abatement includes, but is not limited to, (1) the removal of lead-based paint and dust-lead hazards, the permanent enclosure or encapsulation of lead-based paint, the replacement of lead-painted surfaces or fixtures, and the removal or covering of soil-lead hazards and (2) all preparation, cleanup, disposal, repainting or refinishing, and postabatement clearance testing activities associated with such measures. "Lead abatement" specifically includes projects for which there is a written contract or other documentation, which provides that an individual will be conducting lead abatement in or around a residential dwelling or child-occupied facility.

In addition, "lead abatement" includes, but is not limited to, (1) projects for which there is a written contract or other document, which provides that an individual will be conducting activities in or to a residential dwelling or child-occupied facility that shall result in or are designed to permanently eliminate lead-based paint hazards, (2) projects resulting in the permanent elimination of lead-based paint hazards that are conducted by firms or individuals certified under 641—70.5(135), (3) projects resulting in the permanent elimination of lead-based paint hazards that are conducted by firms or individuals who, through their company name or promotional literature, represent, advertise, or hold themselves out to be in the business of performing lead abatement, and (4) projects resulting in the permanent elimination of lead-based paint that are conducted in response to a lead abatement order. However, in the case of items (1) through (4) of this definition, "lead abatement" does not include renovation, remodeling, landscaping, or other activities, when such activities are not designed to permanently eliminate lead-based paint hazards, but, instead, are designed to repair, restore, or remodel a given structure or dwelling, even though these activities may incidentally result in a reduction or elimination of lead-based paint hazards. Furthermore, "lead abatement" does not include interim controls, operations and maintenance activities, renovation, or other measures and activities designed to temporarily, but not permanently, reduce lead-based paint hazards.

"Lead-based paint" means paint or other surface coatings that contain lead greater than or equal to 1.0 milligram per square centimeter or greater than 0.5 percent by weight. Lead-based paint is present on any surface that is tested and found to contain lead greater than or equal to 1.0 milligram per square centimeter or greater than 0.5 percent by weight and on any surface like a surface tested in the same room equivalent that has a similar painting history and that is found to be lead-based paint.

"Lead-based paint activities" means, in the case of target housing and child-occupied facilities, lead-free inspection, lead inspection, elevated blood lead (EBL) inspection, lead hazard screen, risk assessment, lead abatement, visual risk assessment, clearance testing conducted after lead abatement, clearance testing conducted after renovation, clearance testing conducted after interim controls, paint stabilization, standard treatments, ongoing lead-based paint maintenance, or rehabilitation pursuant to 24 CFR Part 35, and renovation.

"Lead-based paint hazard" means hazardous lead-based paint, a dust-lead hazard, or a soil-lead hazard.

"Lead-based paint hazard reduction activity" means an activity that permanently or temporarily reduces or eliminates lead-based paint hazards. "Lead-based paint hazard reduction activity" includes lead abatement, renovation, or interim controls, paint stabilization, standard treatments, ongoing lead-based paint maintenance, or rehabilitation pursuant to 24 CFR Part 35.

"Lead-free inspection" means an inspection to determine whether a single dwelling unit or multifamily housing is free of lead-based paint and qualifies for the exemption in 24 CFR Part 35 and 40 CFR Part 745 for target housing being leased that is free of lead-based paint and the provision of

a written report explaining the results of the lead-free inspection and options for reducing lead-based paint hazards to the property owner and to the person requesting the lead inspection.

"Lead hazard screen" means a limited risk assessment activity that involves limited paint and dust sampling and the provision of a written report explaining the results of the lead hazard screen to the property owner and to the person requesting the lead hazard screen.

"Lead inspection" means a surface-by-surface investigation to determine the presence of lead-based paint and a determination of the existence, nature, severity, and location of lead-based paint hazards in a residential dwelling or child-occupied facility and the provision of a written report explaining the results of the investigation and options for reducing lead-based paint hazards to the property owner and to the person requesting the lead inspection. A certified lead inspector/risk assessor or certified elevated blood lead (EBL) inspector/risk assessor shall not determine that a residential dwelling is free of lead-based paint as a result of a lead inspection.

"Lead professional" means a person who conducts lead abatement, renovation, lead inspections, elevated blood lead (EBL) inspections, lead hazard screens, risk assessments, visual risk assessments, clearance testing after lead abatement, clearance testing after renovation, or clearance testing after interim controls, paint stabilization, standard treatments, ongoing lead-based paint maintenance, or rehabilitation pursuant to 24 CFR Part 35.

"Lead-safe work practices" means methods that are used to minimize hazards when conducting renovation or interim controls, paint stabilization, standard treatments, ongoing lead-based paint maintenance, or rehabilitation pursuant to 24 CFR Part 35.

"Lead-safe work practices training program" means an 8-hour training program that provides training on how to work safely with lead-based paint.

"Living area" means any area of a residential dwelling used by at least one child under the age of six years, including, but not limited to, living rooms, kitchen areas, dens, playrooms, and children's bedrooms.

"Loading" means the quantity of a specific substance present per unit of surface area, such as the amount of lead in micrograms contained in the dust collected from a certain surface area divided by the surface area in square feet or square meters.

"Mid-yard" means an area of a residential yard approximately midway between the dripline of a residential building and the nearest property boundary or between the driplines of a residential building and another building on the same property.

"Minor repair and maintenance activities" means activities, including minor heating, ventilation or air-conditioning work, electrical work, and plumbing, that disrupt less than the minimum areas of a painted surface established in this definition where none of the work practices prohibited or restricted by this chapter are used and where the work does not involve window replacement or demolition of painted surface areas. When painted components or portions of painted components are removed, the entire surface area removed is the amount of painted surface disturbed. Projects, other than emergency renovation, performed in the same room within the same 30 days must be considered the same project for the purpose of determining whether the project is a minor repair and maintenance activity. Renovations performed in response to an elevated blood lead (EBL) inspection are not considered minor repair and maintenance activities. The minimum area for minor repair and maintenance activities is:

1. Less than 1.0 square foot of an interior painted or finished wood surface per renovation;
2. Less than 6.0 square feet of a painted or finished drywall or plaster surface per room; or
3. Less than 20.0 square feet of an exterior painted or finished surface per renovation.

Projects performed pursuant to 24 CFR Part 35 shall comply with the de minimis levels in 24 CFR 35.1350 if these de minimis levels are more restrictive than the minimum areas of a painted surface established in this definition.

"Multifamily dwelling" means a structure that contains more than one separate residential dwelling unit, which is used or occupied, or intended to be used or occupied, in whole or in part, as the home or residence of one or more persons.

"Multifamily housing" means one or more multifamily dwellings that are under the same ownership or management.

"Negative classification" means any value defined by the performance characteristics sheet as indicating that lead-based paint is not present.

"NIST 1.02 standard film" means the National Institute of Standards and Technology 1.02 milligrams of lead per square centimeter standard reference material. If the specific 1.02 milligrams of lead per square centimeter standard is not available from NIST, then the lead inspector/risk assessor or elevated blood lead (EBL) inspector/risk assessor shall use the closest available standard from NIST (1.0X).

"Occupant protection plan" means a plan developed by a certified lead abatement contractor prior to the commencement of lead abatement in a residential dwelling or child-occupied facility that describes the measures and management procedures that will be taken during lead abatement to protect the building occupants from exposure to any lead-based paint hazards.

"Ongoing lead-based paint maintenance" means the maintenance of housing pursuant to 24 CFR Part 35.

"Painted component" means a component or building component that is at least partially covered with paint or other surface coating.

"Paint-lead hazard" means the presence of hazardous lead-based paint in a residential dwelling or a child-occupied facility.

"Paint sample" means a sample collected in a representative location using ASTM E1729, "Standard Practice for Field Collection of Dried Paint Samples for Lead Determination by Atomic Spectrometry Techniques," or equivalent method.

"Paint stabilization" means repairing any physical defect in the substrate of a painted surface that is causing paint deterioration, removing loose paint and other material from the surface to be treated, and applying a new protective coating or paint pursuant to 24 CFR Part 35.

"Paint testing" means the process of determining the presence or the absence of lead-based paint on a specific component or surface. Paint testing shall only be conducted by certified lead inspector/risk assessors or certified elevated blood lead (EBL) inspector/risk assessors using approved methods for testing. Approved methods for paint testing are XRF analysis and laboratory analysis.

"Performance characteristics sheet (PCS)" means an information sheet developed by the U.S. Environmental Protection Agency and U.S. Department of Housing and Urban Development that defines acceptable operating specifications and procedures for a specific model of X-ray fluorescence analyzer (XRF). The PCS contains information about XRF readings taken on specific substrates, calibration check tolerances, interpretation of XRF readings, and other aspects of the model's performance.

"Permanently covered soil" means soil which has been separated from human contact by the placement of a barrier consisting of solid, relatively impermeable materials, such as pavement or concrete. Grass, mulch, and other landscaping materials are not considered permanent covering.

"Play area" means an area of frequent soil contact by children of less than six years of age as indicated by, but not limited to, factors including the following: the presence of play equipment (sandboxes, swing sets, and sliding boards), toys, or other children's possessions, observations of play patterns, or information provided by parents, residents, caregivers, or property owners.

"Positive classification" means any value defined by the performance characteristics sheet as indicating the presence of lead-based paint.

"Postrenovation cleaning verification" means the use of a wet or dry disposable cleaning cloth to wipe the interior windowsill, window trough, uncarpeted floor, and countertops of the renovation work area and the comparison of the cloth to a cleaning verification card to determine if the work area has been adequately cleaned.

"Principal instructor" means the individual who has the primary responsibility for organizing and teaching a particular course.

"Random selection" means a method of choosing residential dwellings from multifamily housing consisting of similarly constructed and maintained residential dwellings such that each residential dwelling has an equal chance of being selected.

"Recognized laboratory" means an environmental laboratory recognized by the U.S. Environmental Protection Agency pursuant to Section 405(b) of the federal Toxic Substance Control Act as capable of performing an analysis for lead compounds in paint, soil, and dust.

"Recognized test kit" means a commercially available kit recognized by the EPA under 40 CFR 745.88 as being capable of allowing a user to determine the presence of lead at levels equal to or in excess of 1.0 milligrams per square centimeter, or more than 0.5 percent by weight, in a paint chip, paint, powder, or painted surface.

"Reduction" means measures designed to reduce or eliminate human exposure to lead-based paint hazards through methods including interim controls and lead abatement.

"Reevaluation" means a visual assessment of painted surfaces and limited dust and soil sampling conducted periodically following a lead-based paint hazard reduction activity where lead-based paint is still present and the provision of a written report explaining the results of the reevaluation.

"Refresher training course" means a course taken by a certified lead professional to maintain certification in a particular discipline.

"Regulated entity" means any lead professional or firm that is regulated by the department by virtue of these rules, the Iowa Code, certification documents, approval documents, lead abatement notices, or other official regulatory promulgation.

"Rehabilitation" means the improvement of an existing structure through alterations, incidental additions, or enhancements. Rehabilitation includes repairs necessary to correct the results of deferred maintenance, the replacement of principal fixtures and components, improvements to increase the efficient use of energy, and installation of security devices.

"Renovation" means the modification of any existing structure, or portion thereof, that results in the disturbance of painted surfaces, unless that activity is performed as part of lead abatement as defined by this chapter. The term "renovation" includes, but is not limited to, the removal, modification, or repair of painted surfaces or painted components such as modification of painted doors, surface restoration, and window repair; surface preparation activity such as sanding, scraping, or other such activities that may generate paint dust; the partial or complete removal of building components such as walls, ceilings, and windows; weatherization projects such as cutting holes in painted surfaces to install blown-in insulation or to gain access to attics and planing thresholds to install weatherstripping; and interim controls that disturb painted surfaces. "Renovation" does not include minor repair and maintenance activities.

"Residential building" means a building containing one or more residential dwellings.

"Residential dwelling" means (1) a detached single-family dwelling unit, including the surrounding yard, attached structures such as porches and stoops, and detached buildings and structures including, but not limited to, garages, farm buildings, and fences, or (2) a single-family dwelling unit in a structure that contains more than one separate residential dwelling unit, which is used or occupied, or intended to be used or occupied, in whole or part, as the home or residence of one or more persons.

"Risk assessment" means an investigation to determine the existence, nature, severity, and location of lead-based paint hazards in a residential dwelling or child-occupied facility and the provision of a written report explaining the results of the investigation and options for reducing lead-based paint hazards to the property owner and to the person requesting the risk assessment.

"Room" means a separate part of the inside of a building, such as a bedroom, living room, dining room, kitchen, bathroom, laundry room, or utility room. To be considered a separate room, the room must be separated from adjoining rooms by built-in walls or archways that extend at least six inches from an intersecting wall. Half walls or bookcases count as room separators if built-in. Movable or collapsible partitions or partitions consisting solely of shelves or cabinets are not considered built-in walls. A screened-in porch that is used as a living area is a room. Each exterior side of the house is considered a separate room.

"Soil-lead hazard" means bare soil on residential real property or on the property of a child-occupied facility that contains total lead greater than or equal to 400 parts per million for the dripline, mid-yard, and play areas. A soil-lead hazard is present in a dripline, mid-yard, or play area when the soil-lead concentration from a composite sample of bare soil is greater than or equal to 400 parts per million.

"Soil sample" means a sample collected in a representative location using ASTM E1727, "Standard Practice for Field Collection of Soil Samples by Atomic Spectrometry Techniques," or equivalent method.

"Standard treatments" means a series of hazard reduction measures designed to reduce all lead-based paint hazards in a residential dwelling without the benefit of a risk assessment or other evaluation pursuant to 24 CFR Part 35. Standard treatments consist of the stabilization of all deteriorated interior and exterior paint, the provision of smooth and cleanable horizontal hard surfaces, the correction of dust-generating conditions (i.e., conditions causing rubbing, binding, or crushing of surfaces known to or presumed to be coated with lead-based paint), and the treatment of bare soil to control known or presumed soil-lead hazards.

"State certification examination" means a discipline-specific examination approved by the department to test the knowledge of a person who has completed an approved training course and is applying for certification in a particular discipline. The state certification examination may not be administered by the provider of an approved course.

"Substrate" means the material underneath the paint or finish on a surface. Substrates are classified as brick, concrete, drywall, metal, plaster, or wood.

"Substrate correction" means adjustments that must be made to readings obtained from some X-ray fluorescence analyzers to correct for systematic biases due to interference from the substrate beneath the paint.

"Substrate correction value" means the value that is used to adjust readings obtained from some X-ray fluorescence analyzers to correct for systematic biases due to interference from the substrate beneath the paint.

"Targeted selection" means selecting residential dwellings from multifamily housing for risk assessments or lead hazard screens using information supplied by the property owner.

"Target housing" means housing constructed prior to 1978 with the exception of housing for the elderly or for persons with disabilities and housing which does not contain a bedroom, unless at least one child under the age of six years resides or is expected to reside in the housing for the elderly or persons with disabilities or housing which does not contain a bedroom. Target housing also includes any nonresidential building where lead-based paint activities are conducted prior to or during the conversion of the nonresidential building to target housing.

"Testing combination" means the unique combination of the room, component, substrate, and distinct painting history.

"Training hour" means at least 50 minutes of actual learning, including, but not limited to, time devoted to lecture, learning activities, small group activities, demonstrations, evaluations, or hands-on experience.

"Training manager" means the individual responsible for administering an approved course and monitoring the performance of principal instructors and guest instructors.

"Training program" means a person or organization sponsoring a lead professional training course(s).

"Visual inspection for clearance testing" means the visual examination of a residential dwelling or a child-occupied facility following lead abatement or following interim controls, paint stabilization, standard treatments, ongoing lead-based paint maintenance, or rehabilitation pursuant to 24 CFR 35.1340 to determine whether or not the lead abatement, interim controls, paint stabilization, standard treatments, ongoing lead-based paint maintenance, or rehabilitation has been successfully completed.

"Visual risk assessment" means a visual assessment to determine the presence of deteriorated paint or other potential sources of lead-based paint hazards in a residential dwelling or child-occupied facility and the provision of a written report explaining the results of the assessment to the property owner and to the person requesting the visual risk assessment. For the purpose of compliance with this chapter, housing quality standards inspections conducted in housing owned by a public housing authority and housing that is receiving tenant-based rental assistance from a public housing authority are not considered visual risk assessments.

"Weighted arithmetic mean" means the arithmetic mean of sample results weighted by the number of subsamples in each sample. Its purpose is to give influence to a sample relative to the surface area it represents. A single surface dust sample is comprised of a single dust subsample. A composite dust sample may contain from two to four dust subsamples of the same area as each other and of each single

surface dust sample in the composite. The weighted arithmetic mean is obtained by summing, for all dust samples, the product of the dust sample's result multiplied by the number of dust subsamples in the dust sample, and dividing the sum by the total number of dust subsamples contained in all dust samples. For example, the weighted arithmetic mean of a single surface dust sample containing 60 micrograms per square foot ($\mu g/ft^2$), a composite dust sample (three dust subsamples) containing 100 $\mu g/ft^2$, and a composite dust sample (four dust subsamples) containing 110 $\mu g/ft^2$ is 100 $\mu g/ft^2$. This result is based on the equation $[60+(3\times100)+(4\times110)] / (1+3+4)$.

"Wet disposable cleaning cloth" means a commercially available, premoistened white disposable cloth designed to be used for cleaning hard surfaces such as uncarpeted floors or countertops.

"Wet mopping system" means a device with the following characteristics: a long handle, a mop head designed to be used with disposable absorbent cleaning pads, a reservoir for cleaning solution, and a built-in mechanism for distributing or spraying the cleaning solution onto a floor, or a method of equivalent efficiency.

"Wet sanding" means a process of removing loose paint in which a surface that is partially coated with paint or other surface coating is kept wet or moist during sanding to minimize the dispersal of paint chips and airborne dust.

"Wet scraping" means a process of removing loose paint in which a surface that is partially coated with paint or other surface coating is kept wet or moist during scraping to minimize the dispersal of paint chips and airborne dust.

"Windowsill" means the portion of the horizontal window ledge that protrudes into the interior of the room when the window is closed.

"Window trough" means, for a typical double-hung window, the portion of the exterior windowsill between the interior windowsill (or stool) and the frame of the storm window. If there is no storm window, the window trough is the area that receives both the upper and lower window sashes when they are both lowered. The window trough is sometimes referred to as the window well.

"Wipe sample" means a sample collected by wiping a representative surface of known area, as determined by ASTM E1728, "Standard Practice for Field Collection of Settled Dust Samples Using Wipe Sampling Methods for Lead Determination by Atomic Spectrometry Techniques," or equivalent method, with an acceptable wipe material as defined in ASTM E1792, "Standard Specification for Wipe Sampling Materials for Lead in Surface Dust." The minimum area for a floor wipe sample shall be 0.50 square feet or 72 square inches. The minimum area for a windowsill wipe sample and for a window trough wipe sample shall be 0.25 square feet or 36 square inches.

"Worksite" or *"work area"* means an interior or exterior area where lead-based paint hazard reduction activity or renovation takes place. There may be more than one worksite in a dwelling unit or at a residential property.

"Worst case selection" means conducting a walk-through survey of all residential dwellings in the multifamily housing to select the highest-risk residential dwellings for risk assessments or lead hazard screens.

"X-ray fluorescence analyzer (XRF)" means an instrument that determines lead concentrations in milligrams per square centimeter (mg/cm^2) using the principle of X-ray fluorescence.

"XRF reading" means the number obtained when a surface is tested with an X-ray fluorescence analyzer.

[**ARC 8502B**, IAB 2/10/10, effective 1/13/10; **ARC 0482C**, IAB 12/12/12, effective 1/16/13]

641—70.3(135) Lead professional certification. A person or a firm shall not conduct lead abatement, clearance testing after lead abatement, lead-free inspections, lead inspections, elevated blood lead (EBL) inspections, lead hazard screens, risk assessments, visual risk assessments, clearance testing after renovation, or interim controls, paint stabilization, standard treatments, ongoing lead-based paint maintenance, or rehabilitation pursuant to 24 CFR Part 35 unless the person or firm has been certified by the department in the appropriate discipline. Beginning April 22, 2010, a person or firm shall not conduct renovation unless the person or firm has been certified by the department in the appropriate discipline. However, persons who perform these activities within residential dwellings that they own

are not required to be certified, unless the residential dwelling is occupied by a person other than the owner or a member of the owner's immediate family while these activities are being performed. In addition, elevated blood lead (EBL) inspections shall be conducted only by certified elevated blood lead (EBL) inspector/risk assessors employed by or under contract with a certified elevated blood lead (EBL) inspection agency. In addition, persons who perform renovation under the supervision of a certified lead-safe renovator, certified lead abatement contractor, or certified lead abatement worker and who have completed on-the-job training are not required to be certified. However, on-the-job training does not meet the training requirement for work conducted pursuant to 24 CFR Part 35. Lead professionals and firms shall not state that they have been certified by the state of Iowa unless they have met the requirements of 641—70.5(135) and been issued a current certificate by the department. Elevated blood lead (EBL) inspection agencies must be certified by the department. Elevated blood lead (EBL) inspection agencies shall not state that they have been certified by the state of Iowa unless they have met the requirements of 641—70.5(135) and been issued a current certificate by the department.
[**ARC 8502B**, IAB 2/10/10, effective 1/13/10]

641—70.4(135) Course approval and standards. All lead professional training courses for initial certification and refresher training must be approved by the department. Training programs shall not state that they have been approved by the state of Iowa unless they have met the requirements of 641—70.4(135) and been issued a letter of approval by the department. Lead-safe work practices training programs that were approved by the department prior to January 13, 2010, must reapply for approval.

70.4(1) Training courses shall meet the following requirements:

a. The training program offering the course shall employ a training manager who has the following qualifications:

(1) A bachelor's or graduate degree in building construction technology, engineering, industrial hygiene, safety, public health, or a related field; or two years of experience in managing a training program specializing in environmental hazards.

(2) Demonstrated experience, education, or training in lead professional activities, including lead inspection, lead abatement, lead-safe work practices, painting, carpentry, renovation, remodeling, occupational safety and health, or industrial hygiene.

b. The training manager shall designate a qualified principal instructor for each course who has the following qualifications:

(1) Demonstrated experience, education, or training in teaching workers or adults.

(2) Certification as a lead inspector/risk assessor, elevated blood lead (EBL) inspector/risk assessor, or lead abatement contractor. In the case of a course for training lead-safe renovators, the principal instructor may be certified as a sampling technician.

(3) Demonstrated experience, education, or training in lead professional activities, including lead inspection, lead abatement, lead-safe work practices, painting, carpentry, renovation, remodeling, occupational safety and health, or industrial hygiene.

c. The principal instructor shall be responsible for the organization of the course and oversight of the teaching of all course material. The training manager may designate guest instructors as needed to provide instruction specific to the lecture, hands-on activities, or work practice components of a course.

d. The training program shall ensure the availability of, and provide adequate facilities for, the delivery of the lecture, course test, hands-on training, and assessment activities. This includes providing training equipment that reflects current work practices and maintaining or updating the equipment as needed.

e. The training manager shall maintain the validity and integrity of the hands-on skills assessment to ensure that it accurately evaluates the trainees' performance of the work practices and procedures associated with the course topics contained in subrules 70.4(3) to 70.4(17).

f. The training manager shall maintain the validity and integrity of the course test to ensure that it accurately evaluates the trainees' knowledge and retention of the course topics.

g. The course test shall be developed in accordance with the test blueprint submitted with the course approval application. Training programs may use course tests developed by the department.

h. The training program shall issue unique course completion certificates to each individual who passes the course. The course completion certificate shall be issued in color. The course completion certificate shall include:

(1) The name and address of the individual, a photograph of the individual, and a unique identification number.

(2) The name of the particular course that the individual completed and the course length in hours.

(3) Dates of course completion and test passage.

(4) The name, address, and telephone number of the training program.

(5) The signature of the training manager.

i. The training manager shall develop and implement a quality control plan. The plan shall be used to maintain and improve the quality of the training program over time. This plan shall contain at least the following elements:

(1) Procedures for periodic revision of training materials and the course test to reflect changes in regulations and recommended practices.

(2) Procedures for the training manager to conduct an annual review of the competency of the principal instructor and all other instructors.

j. The training program shall offer courses that teach the work practice standards for conducting lead-based paint activities contained in 641—70.6(135) and other standards developed by the department. These standards shall be taught in the appropriate courses to provide trainees with the knowledge needed to perform the lead-based paint activities they are responsible for conducting.

k. The training manager shall ensure that each course meets the requirements in this rule for the number of training hours and hours of hands-on training. The training manager shall ensure that any student who misses more than 20 minutes of class time makes up the time before taking the course test.

l. The training manager shall ensure that the training program complies at all times with all requirements in this rule.

m. The training manager shall allow the department to audit the training program to verify the contents of the application for approval and for reapproval.

n. The training program shall maintain, and make available to the department, upon request, the following records:

(1) All documents specified in paragraph 70.4(2)*"f."*

(2) Current curriculum/course materials and documents reflecting any changes made to these materials.

(3) The course test blueprint and the course test.

(4) Information regarding how the hands-on assessment is conducted including, but not limited to, who conducts the assessment, how the skills are graded, what facilities are used, and the pass/fail rate.

(5) The quality control plan as described in paragraph 70.4(1)*"i."*

(6) A file for each student who has completed a course. Each student file shall contain the following:

1. The student's name, address, and telephone number.
2. The student's test and answer sheet.
3. A copy of the student's course completion certificate.
4. A copy of the student's hands-on skill assessment, if applicable.
5. A photograph of the student as taken by the training program.

(7) A file for each individual course that has been offered. Each file shall include the following:

1. The dates of the course.
2. The location of the course.
3. The instructors who taught the course.
4. A paper or electronic copy of the curriculum used for the course.
5. A copy of the test used for the course.
6. Documentation of the times that each student was present at the course, including documentation of how a student made up missed time.

7. The course evaluations.

(8) Any other materials that have been submitted to the department as part of the program's application for approval.

o. The training program shall retain all required records at the address specified on the training program approval application for a minimum of six years.

p. The training program shall notify the department in writing within 30 days of changing the address specified on its training program approval application or transferring the records from that address.

q. A training program shall notify the department in writing at least 7 days in advance of offering an approved course. The notification shall include the date(s), time(s), and location(s) where the approved course will be held. A training program shall notify the department at least 24 hours in advance of canceling an approved course.

r. The training program shall take a digital photograph of each student. The digital photograph shall be the same photograph that appears on the training certificate and is submitted to the department. The photograph shall meet the following specifications:

(1) The individual shall be facing the camera.

(2) The individual's head shall not be tilted.

(3) The individual's head shall cover approximately half of the photo area.

(4) The individual shall be in front of a neutral or light-colored background.

(5) The individual shall not wear any items that detract from the face, such as hats or sunglasses. Only head coverings worn for religious reasons may be worn. Religious head coverings may not cover the face of the individual.

(6) Photographs shall be 24-bit color depth.

s. A training program shall provide the following information to the department electronically in a format specified by the department within 30 days of the conclusion of an approved course for each student who has taken the approved course:

(1) Name, address, and social security number.

(2) Course completion certificate number.

(3) Test score.

(4) The photograph of each student as taken by the training program shall be submitted as a joint photographic experts group (JPEG) file with a size of at least two inches by two inches and a minimum resolution of 300 pixels per inch.

70.4(2) If a training program desires approval of a course by the department, the training program shall apply to the department for approval of the course at least 90 days before the initial offering of the course if the training program will use materials developed by the training program. If the training program will use materials developed by the department, the training program shall apply to the department for approval of the course at least 30 days before the initial offering of the course. The department may allow courses to be offered sooner if the department completes the approval in less than 30 days. The application shall include:

a. Training program name, contact person, address, and telephone number.

b. Course dates and times.

c. Course location, including a description of the facilities and equipment to be used for lecture and hands-on training.

d. Course agenda, including approximate times allotted to each training segment.

e. A copy of each reference material, text, student and instructor manuals, and audio-visual material used in the course. These materials may also be provided by the department.

f. The name(s) and qualifications of the training manager, principal instructor(s), and guest instructor(s). The following documents shall be submitted as evidence that training managers and principal instructors have the education, work experience, training requirements, or demonstrated experience required by subrule 70.4(1):

(1) Official transcripts or diplomas as evidence of meeting the education requirements.

(2) Résumés, letters of reference, or documentation of work experience, as evidence of meeting the work experience requirements.

(3) Certificates from lead-specific training courses, as evidence of meeting the training requirements.

g. A copy of the course test blueprint. The course test may also be provided by the department.

h. A description of the activities and procedures that will be used for conducting the assessment of hands-on skills for each course.

i. Maximum class size.

j. A copy of the quality control plan for the course.

k. A nonrefundable fee of $200.

70.4(3) To be approved for the training of lead inspector/risk assessors and elevated blood lead (EBL) inspector/risk assessors, a course must be at least 40 training hours with a minimum of 12 hours devoted to hands-on training activities. Lead inspector/risk assessor and elevated blood lead (EBL) inspector/risk assessor training courses shall cover at least the following subjects (requirements ending in an asterisk (*) indicate areas that require hands-on activities as an integral component of the course):

a. Role and responsibilities of an inspector/risk assessor.

b. Background information on lead and its adverse health effects, how children and adults are exposed to lead, and how to prevent lead exposure in children and adults.

c. Background information on federal, state, and local regulations and guidance that pertain to lead-based paint and lead-based paint activities.

d. Lead-based paint inspection methods, including selection of rooms and components for sampling or testing to determine if a property is free of lead-based paint as specified in the Guidelines for the Evaluation and Control of Lead-Based Paint Hazards in Housing (1995, U.S. Department of Housing and Urban Development), and methods to determine if lead-based paint hazards are present in a property.*

e. Paint, dust, and soil sampling methodologies.*

f. Clearance standards and testing, including random sampling.*

g. Collection of background information to perform a risk assessment.

h. Sources of environmental lead contamination such as paint, surface dust and soil, and water.

i. Visual inspection to identify lead-based paint hazards.*

j. Lead hazard screen protocol.

k. Visual risk assessment protocol.

l. Reevaluation protocol.

m. In the case of renovation, procedures for using recognized test kits to determine whether paint is lead-based paint.*

n. In the case of renovation, methods to ensure that the renovation has been properly completed, including postrenovation cleaning verification and clearance testing.*

o. Sampling for other sources of lead exposure.*

p. Interpretation of lead-based paint and other lead sampling results, including all applicable federal, state, and local guidance or regulations pertaining to lead-based paint hazards.*

q. Development of lead hazard control options.

r. The role of interim controls, operation and maintenance activities, and renovation in reducing lead-based paint hazards.

s. Approved methods for conducting lead-based paint abatement, interim controls, operation and maintenance activities, and renovation.

t. Prohibited methods for conducting lead-based paint abatement, interim controls, operation and maintenance activities, and renovation.

u. Interior dust abatement and cleanup.

v. Soil and exterior dust abatement and cleanup.

w. Preparation of the final reports for lead inspections, lead-free inspections, risk assessments, visual assessments, lead hazard screens, clearance testing after lead abatement, clearance testing after

renovation, reevaluation, and clearance testing after interim controls, paint stabilization, standard treatments, ongoing lead-based paint maintenance, and rehabilitation pursuant to 24 CFR Part 35.

x. Record keeping.

y. The course shall conclude with a course test and, if applicable, a hands-on skills assessment. The student must achieve a score of at least 80 percent on the examination and successfully complete the hands-on skills assessment to successfully complete the course. The student may take the course test no more than three times within six months of completing the course. If an individual does not pass the course test within six months of completing the course, the individual must retake the appropriate approved course.

z. The instructor shall provide each student with instructions and forms needed to apply to the department for certification and information provided by the department regarding the state certification examination. The instructor shall also provide each student with a current copy of this chapter and 641—Chapter 69.

aa. All of the course materials including instructions, applications, and forms must be provided on paper unless an individual student requests that the materials be provided electronically.

70.4(4) To be approved for the training of lead inspector/risk assessors and elevated blood lead (EBL) inspector/risk assessors who have already completed an approved sampling technician course, a course must be at least 20 training hours with a minimum of 8 hours devoted to hands-on training activities. The training course shall cover at least the following subjects (requirements ending in an asterisk (*) indicate areas that require hands-on activities as an integral component of the course):

a. Role and responsibilities of a lead inspector/risk assessor and elevated blood lead (EBL) inspector/risk assessor.

b. Lead-based paint inspection methods, including selection of rooms and components for sampling or testing to determine if a property is free of lead-based paint as specified in the work practice standards in 641—70.6(135), and methods to determine if lead-based paint hazards are present in a property.*

c. Collection of background information to perform a risk assessment.

d. Lead hazard screen protocol.

e. Reevaluation protocol.

f. Sampling for other sources of lead exposure.*

g. Interpretation of lead-based paint and other lead sampling results, including all applicable federal, state, and local guidance or regulations pertaining to lead-based paint hazards.*

h. Development of lead hazard control options, including lead abatement.*

i. The role of interim controls, operation and maintenance activities, and renovation in reducing lead-based paint hazards.

j. Approved methods for conducting lead abatement, interim controls, operation and maintenance activities, and renovation.

k. Prohibited methods for conducting lead abatement, interim controls, operation and maintenance activities, and renovation.

l. Preparation of the final reports for lead inspections, lead-free inspections, risk assessments, lead hazard screens, reevaluation, and clearance testing after lead abatement.

m. Record keeping.

n. The course shall conclude with a course test and, if applicable, a hands-on skills assessment. The student must achieve a score of at least 80 percent on the examination and successfully complete the hands-on skills assessment to successfully complete the course. The student may take the course test no more than three times within six months of completing the course. If an individual does not pass the course test within six months of completing the course, the individual must retake the appropriate approved course.

o. The instructor shall provide each student with instructions and forms needed to apply to the department for certification and information provided by the department regarding the state certification examination. The instructor shall also provide each student with a current copy of this chapter and 641—Chapter 69.

p. All of the course materials including instructions, applications, and forms must be provided on paper unless an individual student requests that the materials be provided electronically.

70.4(5) Rescinded IAB 3/31/04, effective 5/5/04.

70.4(6) Rescinded IAB 3/31/04, effective 5/5/04.

70.4(7) Rescinded IAB 3/31/04, effective 5/5/04.

70.4(8) To be approved for the training of lead abatement contractors, a course must be at least 40 training hours with a minimum of 12 hours devoted to hands-on activities and shall cover at least the following subjects (requirements ending in an asterisk (*) indicate areas that require hands-on activities as an integral component of the course):

a. Role and responsibilities of a lead abatement contractor.

b. Background information on lead and its adverse health effects, how children and adults are exposed to lead, and how to prevent lead exposure in children and adults.

c. Background information on federal, state, and local regulations and guidance that pertain to lead-based paint and lead-based paint activities.

d. Liability and insurance issues relating to lead abatement, interim controls, and renovation.

e. Identification of lead-based paint and lead-based paint hazards.*

f. Interpretation of lead inspection reports.*

g. Development and implementation of an occupant protection plan, lead abatement report, and renovation report.

h. Respiratory protection and protective clothing.*

i. Employee information and training.

j. Approved methods for conducting lead abatement, interim controls, and renovation.*

k. Prohibited methods for conducting lead abatement, interim controls, and renovation.

l. Interior dust abatement and cleanup.*

m. Soil and exterior dust abatement and cleanup.*

n. Clearance standards and testing, including random sampling.

o. Cleanup, waste handling, and waste disposal.

p. In the case of renovation, interior and exterior containment and cleanup methods.*

q. In the case of renovation, providing on-the-job training to other workers.*

r. In the case of renovation, procedures for using recognized test kits to determine whether paint is lead-based paint, including preparation of the required report.*

s. In the case of renovation, methods to ensure that the renovation has been properly completed, including postrenovation cleaning verification and clearance testing.*

t. In the case of renovation, record preparation and record keeping.

u. Record keeping for lead abatement.

v. The course shall conclude with a course test and, if applicable, a hands-on skills assessment. The student must achieve a score of at least 80 percent on the examination and successfully complete the hands-on skills assessment to successfully complete the course. The student may take the course test no more than three times within six months of completing the course. If an individual does not pass the course test within six months of completing the course, the individual must retake the appropriate approved course.

w. The instructor shall provide each student with instructions and forms needed to apply to the department for certification and information provided by the department regarding the state certification examination. The instructor shall also provide each student with a current copy of this chapter and 641—Chapter 69.

x. All of the course materials including instructions, applications, and forms must be provided on paper unless an individual student requests that the materials be provided electronically.

70.4(9) To be approved for the training of lead abatement contractors who have already completed an approved lead abatement worker course, a course must be at least 16 training hours with a minimum of 4 hours devoted to hands-on activities and shall cover at least the following subjects (requirements ending in an asterisk (*) indicate areas that require hands-on activities as an integral component of the course):

a. Role and responsibilities of a lead abatement contractor.

b. Liability and insurance issues relating to lead abatement.

c. Interpretation of lead inspection reports.*

d. Development and implementation of an occupant protection plan and abatement report.

e. Employee information and training.

f. Clearance standards and testing, including random sampling.

g. Record keeping for lead abatement.

h. The course shall conclude with a course test and, if applicable, a hands-on skills assessment. The student must achieve a score of at least 80 percent on the examination and successfully complete the hands-on skills assessment to successfully complete the course. The student may take the course test no more than three times within six months of completing the course. If an individual does not pass the course test within six months of completing the course, the individual must retake the appropriate approved course.

i. The instructor shall provide each student with instructions and forms needed to apply to the department for certification and with information provided by the department regarding the state certification examination. The instructor shall also provide each student with a current copy of this chapter and 641—Chapter 69.

j. All of the course materials including instructions, applications, and forms must be provided on paper unless an individual student requests that the materials be provided electronically.

70.4(10) To be approved for the training of lead abatement workers, a course must be at least 24 training hours with a minimum of 8 hours devoted to hands-on activities and shall cover at least the following subjects (requirements ending in an asterisk (*) indicate areas that require hands-on activities as an integral component of the course):

a. Role and responsibilities of a lead abatement worker.

b. Background information on lead and its adverse health effects, how children and adults are exposed to lead, and how to prevent lead exposure in children and adults.

c. Background information on federal, state, and local regulations and guidance that pertain to lead-based paint and lead-based paint activities.

d. Identification of lead-based paint and lead-based paint hazards.*

e. Approved methods for conducting lead abatement, interim controls, and renovation.*

f. Prohibited methods for conducting lead abatement, interim controls, and renovation.

g. Interior dust abatement and cleanup.*

h. Soil and exterior dust abatement and cleanup.*

i. Cleanup, waste handling, and waste disposal.

j. Respiratory protection and protective clothing.*

k. Personal hygiene.

l. In the case of renovation, interior and exterior containment and cleanup methods.*

m. In the case of renovation, providing on-the-job training to other workers.*

n. In the case of renovation, procedures for using recognized test kits to determine whether paint is lead-based paint, including preparation of the required report.*

o. In the case of renovation, methods to ensure that the renovation has been properly completed, including postrenovation cleaning verification and clearance testing.*

p. In the case of renovation, record preparation and record keeping.

q. The course shall conclude with a course test and, if applicable, a hands-on skills assessment. The student must achieve a score of at least 80 percent on the examination and successfully complete the hands-on skills assessment to successfully complete the course. The student may take the course test no more than three times within six months of completing the course. If an individual does not pass the course test within six months of completing the course, the individual must retake the appropriate approved course.

r. The instructor shall provide each student with instructions and forms needed to apply to the department for certification. The instructor shall also provide each student with a current copy of this chapter and 641—Chapter 69.

s. All of the course materials including instructions, applications, and forms must be provided on paper unless an individual student requests that the materials be provided electronically.

70.4(11) To be approved for the training of sampling technicians, a course must be at least 20 training hours with a minimum of 4 hours devoted to hands-on training activities. The training course shall cover at least the following subjects (requirements ending in an asterisk (*) indicate areas that require hands-on activities as an integral component of the course):

a. Role and responsibilities of a sampling technician.

b. Background information on lead and its adverse health effects, how children and adults are exposed to lead, and how to prevent lead exposure in children and adults.

c. Background information on federal, state, and local regulations and guidance that pertain to lead-based paint and lead-based paint activities.

d. Methods of conducting visual risk assessments.*

e. Paint, dust, and soil sampling methodologies.*

f. In the case of renovation, procedures for using recognized test kits to determine whether paint is lead-based paint.*

g. Clearance standards and testing.*

h. Identification of lead-based paint hazards.*

i. Sources of environmental lead contamination such as paint, surface dust and soil, and water.

j. Visual inspection to identify lead-based paint hazards.*

k. Approved methods for conducting lead abatement, interim controls, operation and maintenance activities, and renovation.

l. Prohibited methods for conducting lead abatement, interim controls, operation and maintenance activities, and renovation.

m. Methods of interim controls and lead abatement for interior dust and cleanup.

n. Methods of interim controls and lead abatement for exterior dust and soil and cleanup.

o. Preparation of the final visual assessment report.

p. Preparation of clearance testing reports for clearance testing after renovation and clearance testing after interim controls, paint stabilization, standard treatments, ongoing lead-based paint maintenance, and rehabilitation pursuant to 24 CFR Part 35.

q. Record keeping.

r. The course shall conclude with a course test and, if applicable, a hands-on skills assessment. The student must achieve a score of at least 80 percent on the examination and successfully complete the hands-on skills assessment to successfully complete the course. The student may take the course test no more than three times within six months of completing the course. If an individual does not pass the course test within six months of completing the course, the individual must retake the appropriate approved course.

s. The instructor shall provide each student with instructions and forms needed to apply to the department for certification. The instructor shall also provide each student with a current copy of this chapter and 641—Chapter 69.

t. All of the course materials including instructions, applications, and forms must be provided on paper unless an individual student requests that the materials be provided electronically.

70.4(12) To be approved for the training of project designers, a course must be at least 48 instructional training hours with a minimum of 12 hours devoted to hands-on activities and shall cover at least the following subjects (requirements ending in an asterisk (*) indicate areas that require hands-on activities as an integral component of the course):

a. Role and responsibilities of a lead abatement contractor.

b. Background information on lead and its adverse health effects, how children and adults are exposed to lead, and how to prevent lead exposure in children and adults.

c. Background information on federal, state, and local regulations and guidance that pertain to lead-based paint and lead-based paint activities.

d. Liability and insurance issues relating to project design.

e. Identification of lead-based paint and lead hazards.*

f. Interpretation of lead inspection reports.*

g. Development and implementation of an occupant protection plan, lead abatement report, and renovation report.

h. Respiratory protection and protective clothing.*

i. Employee information and training.

j. Approved methods for conducting lead abatement, interim controls, and renovation.*

k. Prohibited methods for conducting lead abatement, interim controls, and renovation.

l. Interior dust abatement and cleanup.*

m. Soil and exterior dust abatement and cleanup.*

n. Clearance standards and testing, including random sampling.

o. Cleanup, waste handling, and waste disposal.

p. In the case of renovation, providing on-the-job training to other workers.*

q. In the case of renovation, procedures for using recognized test kits to determine whether paint is lead-based paint, including preparation of the required report.*

r. In the case of renovation, methods to ensure that the renovation has been properly completed, including postrenovation cleaning verification and clearance testing.*

s. In the case of renovation, record preparation and record keeping.

t. Record keeping for lead abatement.

u. Role and responsibilities of a project designer.

v. Development and implementation of an occupant protection plan for large-scale lead abatement projects.

w. Lead abatement and lead hazard reduction methods, including restricted practices for large-scale lead abatement projects.

x. Interior dust abatement/cleanup or lead hazard control and reduction methods for large-scale lead abatement projects.

y. Clearance standards and testing for large-scale lead abatement projects.

z. Integration of lead abatement methods with modernization and rehabilitation projects for large-scale lead abatement projects.

aa. The course shall conclude with a course test and, if applicable, a hands-on skills assessment. The student must achieve a score of at least 80 percent on the examination and successfully complete the hands-on skills assessment to successfully complete the course. The student may take the course test no more than three times within six months of completing the course. If an individual does not pass the course test within six months of completing the course, the individual must retake the appropriate approved course.

ab. The instructor shall provide each student with instructions and forms needed to apply to the department for certification and with information provided by the department regarding the state certification examination. The instructor shall also provide each student with a current copy of this chapter and 641—Chapter 69.

ac. All of the course materials including instructions, applications, and forms must be provided on paper unless an individual student requests that the materials be provided electronically.

70.4(13) To be approved for the training of project designers who have already completed an approved lead abatement contractor course, a course must be at least 8 instructional training hours and shall cover at least the following subjects:

a. Role and responsibilities of a project designer.

b. Development and implementation of an occupant protection plan for large-scale abatement projects.

c. Lead abatement and lead hazard reduction methods, including restricted practices for large-scale lead abatement projects.

d. Interior dust abatement/cleanup or lead hazard control and reduction methods for large-scale lead abatement projects.

e. Clearance standards and testing for large-scale lead abatement projects.

f. Integration of lead abatement methods with modernization and rehabilitation projects for large-scale lead abatement projects.

g. The course shall conclude with a course test and, if applicable, a hands-on skills assessment. The student must achieve a score of at least 80 percent on the examination and successfully complete the hands-on skills assessment to successfully complete the course. The student may take the course test no more than three times within six months of completing the course. If an individual does not pass the course test within six months of completing the course, the individual must retake the appropriate approved course.

h. The instructor shall provide each student with instructions and forms needed to apply to the department for certification and information provided by the department regarding the state certification examination. The instructor shall also provide each student with a current copy of this chapter and 641—Chapter 69.

i. All of the course materials including instructions, applications, and forms must be provided on paper unless an individual student requests that the materials be provided electronically.

70.4(14) To be approved for the training of project designers who have already completed an approved lead abatement worker course, a course must be at least 24 instructional training hours with a minimum of 4 hours devoted to hands-on activities and shall cover at least the following subjects (requirements ending in an asterisk (*) indicate areas that require hands-on activities as an integral component of the course):

a. Role and responsibilities of a lead abatement contractor.

b. Liability and insurance issues relating to lead abatement.

c. Interpretation of lead inspection reports.*

d. Development and implementation of an occupant protection plan and lead abatement report.

e. Employee information and training.

f. Clearance standards and testing, including random sampling.

g. Record keeping.

h. Role and responsibilities of a project designer.

i. Development and implementation of an occupant protection plan for large-scale lead abatement projects.

j. Lead abatement and lead hazard reduction methods, including restricted practices for large-scale lead abatement projects.

k. Interior dust abatement/cleanup or lead hazard control and reduction methods for large-scale lead abatement projects.

l. Clearance standards and testing for large-scale lead abatement projects.

m. Integration of lead abatement methods with modernization and rehabilitation projects for large-scale lead abatement projects.

n. The course shall conclude with a course test and, if applicable, a hands-on skills assessment. The student must achieve a score of at least 80 percent on the examination and successfully complete the hands-on skills assessment to successfully complete the course. The student may take the course test no more than three times within six months of completing the course. If an individual does not pass the course test within six months of completing the course, the individual must retake the appropriate approved course.

o. The instructor shall provide each student with instructions and forms needed to apply to the department for certification and information provided by the department regarding the state certification examination. The instructor shall also provide each student with a current copy of this chapter and 641—Chapter 69.

p. All of the course materials including instructions, applications, and forms must be provided on paper unless an individual student requests that the materials be provided electronically.

70.4(15) To be approved for the training of lead-safe renovators, a course must be at least 8 instructional training hours with a minimum of 2 hours devoted to hands-on activities and shall cover at least the following subjects (requirements ending in an asterisk (*) indicate areas that require hands-on activities as an integral component of the course):

a. Background information on lead and its adverse health effects, how children and adults are exposed to lead, and how to prevent lead exposure in children and adults.

b. Background information on federal, state, and local regulations and guidance that pertain to lead-based paint, lead-based paint activities, and renovation activities.

c. Procedures for using recognized test kits to determine whether paint is lead-based paint, including preparation of the required report.*

d. Renovation methods to minimize the creation of dust and lead-based paint hazards.*

e. Prohibited methods of renovation.

f. Interior and exterior containment and cleanup methods.*

g. Methods to ensure that the renovation has been properly completed, including postrenovation cleaning verification and clearance testing.*

h. Waste handling and disposal.

i. Providing on-the-job training to other workers.*

j. Record preparation and record keeping.

k. The course shall conclude with a course test and, if applicable, a hands-on skills assessment. The student must achieve a score of at least 80 percent on the examination and successfully complete the hands-on skills assessment to successfully complete the course. The student may take the course test no more than three times within six months of completing the course. If an individual does not pass the course test within six months of completing the course, the individual must retake the appropriate approved course.

l. The instructor shall provide each student with instructions and forms needed to apply to the department for certification. The instructor shall also provide each student with a current copy of this chapter and 641—Chapter 69.

m. All of the course materials including instructions, applications, and forms must be provided on paper unless an individual student requests that the materials be provided electronically.

70.4(16) To be approved for refresher training of sampling technicians, lead abatement contractors, lead abatement workers, and project designers, a course must be at least 8 training hours. To be approved for refresher training of lead inspector/risk assessors and elevated blood lead (EBL) inspector/risk assessors who completed an approved 24-hour training course, a course must be at least 8 training hours to meet the recertification requirements of subrule 70.5(3). To be approved for refresher training of lead inspector/risk assessors and elevated blood lead (EBL) inspector/risk assessors to meet the recertification requirements of subrule 70.5(6), a course must be at least 16 training hours. To be approved for refresher training of lead-safe renovators, a course must be at least 4 hours. All refresher training courses shall cover at least the following topics:

a. A review of the curriculum topics of the initial certification course for the appropriate discipline as listed in subrules 70.4(3) to 70.4(15).

b. An overview of current safety practices relating to lead-based paint activities in general, as well as specific information pertaining to the appropriate discipline.

c. Current laws and regulations relating to lead-based paint activities in general, as well as specific information pertaining to the appropriate discipline.

d. Current technologies relating to lead-based paint activities in general, as well as specific information pertaining to the appropriate discipline.

e. The course shall conclude with a course test and, if applicable, a hands-on skills assessment. The student must achieve a score of at least 80 percent on the examination and successfully complete the hands-on skills assessment to successfully complete the course. The student may take the course test no more than three times within six months of completing the course. If an individual does not pass the course test within six months of completing the course, the individual must retake the appropriate approved course.

f. All of the course materials including instructions, applications, and forms must be provided on paper unless an individual student requests that the materials be provided electronically.

70.4(17) Approvals of training courses shall expire three years after the date of issuance. The training manager shall submit the following at least 90 days prior to the expiration date for a course to be reapproved:

a. Sponsoring organization name, contact person, address, and telephone number.

b. A list of the courses for which reapproval is sought.

c. A description of any changes to the training staff, facility, equipment, or course materials since the approval of the training program.

d. A statement signed by the training manager stating that the training program complies at all times with 641—70.4(135).

e. A nonrefundable fee of $200.

70.4(18) The department shall consider a request for approval of a training course that has been approved by a state or tribe authorized by the U.S. Environmental Protection Agency.

a. The course shall be approved if it meets the requirements of 641—70.4(135).

b. If the course does not meet all of the requirements of 641—70.4(135), the department shall inform the training provider of additional topics and training hours that are needed to meet the requirements of 641—70.4(135).

[**ARC 8502B**, IAB 2/10/10, effective 1/13/10]

641—70.5(135) Certification, interim certification, and recertification.

70.5(1) A person wishing to become a certified lead professional shall apply on forms supplied by the department. The applicant must submit:

a. A completed application form.

b. A certificate of completion of an approved course for the discipline in which the applicant wishes to become certified.

c. If wishing to become a certified lead inspector/risk assessor or a certified elevated blood lead (EBL) inspector/risk assessor, documentation of successful completion of the manufacturer's training course or equivalent for the X-ray fluorescence (XRF) analyzer that the inspector/risk assessor or elevated blood lead (EBL) inspector/risk assessor will use to conduct lead inspections.

d. If wishing to become a certified elevated blood lead (EBL) inspector/risk assessor, documentation of successful completion of 8 hours of training from the department's childhood lead poisoning prevention program. This training shall cover the roles and responsibilities of an elevated blood lead (EBL) inspector/risk assessor and the environmental and medical case management of elevated blood lead (EBL) children.

e. Documentation that the applicant meets the additional experience and education requirements in subrule 70.5(2) for the discipline in which the applicant wishes to become certified. The following documents shall be submitted as evidence that the applicant has the education and work experience required by subrule 70.5(2):

(1) Official transcripts or diplomas as evidence of meeting the education requirements.

(2) Résumés, letters of reference, or documentation of work experience, as evidence of meeting the work experience requirements.

f. To become certified as a lead inspector/risk assessor, elevated blood lead (EBL) inspector/risk assessor, lead abatement contractor, or project designer, a certificate showing that the applicant has passed the state certification examination in the discipline in which the applicant wishes to become certified.

g. A $60 nonrefundable fee.

h. A person may receive interim certification from the department as a lead inspector/risk assessor, elevated blood lead (EBL) inspector/risk assessor, lead abatement contractor, or project designer by submitting the items required by paragraphs 70.5(1)*"a"* to *"e"* and *"g"* to the department. Interim certification shall expire six months from the date of completion of an approved course. An applicant shall upgrade an interim certification to a certification by submitting a certificate to the department showing that the applicant has passed the state certification examination as required by paragraph 70.5(1)*"f."* Interim certification is equivalent to certification.

i. Beginning April 22, 2010, lead-safe renovators must be certified by the department. A person who completed an approved course conducted by an approved lead-safe work practices training provider prior to January 13, 2010, must complete a lead-safe renovator refresher course to obtain certification.

70.5(2) To become certified by the department as a lead professional, an applicant must meet the education and experience requirements for the appropriate discipline:

a. Lead inspector/risk assessors and elevated blood lead (EBL) inspector/risk assessors must meet one of the following requirements:

(1) Bachelor's degree and one year of related experience (e.g., lead, environmental health, public health, housing inspection, building trades).

(2) Associate's degree and two years of related experience (e.g., lead, environmental health, public health, housing inspection, building trades).

(3) High school diploma and three years of related experience (e.g., lead, environmental health, public health, housing inspection, building trades).

(4) Certification as an industrial hygienist, professional engineer, registered architect, registered sanitarian, registered environmental health specialist, or registered nurse.

b. Lead abatement contractors must meet one of the following requirements:

(1) One year of experience as a certified lead abatement worker.

(2) Two years of related experience or education (e.g., lead, housing inspection, building trades, property management and maintenance).

c. No additional education or experience is required for lead abatement workers.

d. Sampling technicians must meet one of the following requirements:

(1) Associate's degree.

(2) High school diploma and one year of related experience (e.g., lead, environmental health, public health, housing inspection, building trades).

(3) Certification as an industrial hygienist, professional engineer, registered architect, registered sanitarian, registered environmental health specialist, or registered nurse.

e. Project designers must meet one of the following requirements:

(1) Bachelor's degree in engineering, architecture, or a related profession, and one year of experience in building construction and design or a related field.

(2) Four years of experience in building construction and design or a related field.

f. No additional education or experience is required for lead-safe renovators.

70.5(3) and **70.5(4)** Reserved.

70.5(5) All agencies that perform or offer to perform elevated blood lead (EBL) inspections must be certified by the department. An agency wishing to become a certified elevated blood lead (EBL) inspection agency shall apply on forms supplied by the department. The agency must submit:

a. A completed application form.

b. Documentation that the agency has the authority to require the repair of lead hazards identified through an elevated blood lead (EBL) inspection.

c. Documentation that the agency employs or has contracted with a certified elevated blood lead (EBL) inspector/risk assessor to provide environmental case management of all elevated blood lead (EBL) children in the agency's service area, including follow-up to ensure that lead-based paint hazards identified as a result of elevated blood lead (EBL) inspections are corrected, and that lead-based paint activities will be conducted only by appropriately certified lead professionals. In addition, the agency must document that the agency and its employees or contractors will follow the work practice standards in 641—70.6(135) for conducting lead-based paint activities.

d. A statement that the certified elevated blood lead (EBL) inspection agency will maintain all records required by subrule 70.6(10).

70.5(6) Individuals certified as lead professionals must be recertified each year. To be recertified, lead professionals must submit the following:

a. A completed application form.

b. A $60 nonrefundable fee.

c. Every three years, a certificate showing that the applicant has successfully completed an approved refresher training course for the appropriate discipline. The initial refresher training course must be completed no more than three years after the date on which the applicant completed an approved training program.

d. If a certified individual taking a refresher training course is also an approved instructor for that particular refresher training course and has access to the testing materials, the certified individual must take a refresher training course test supplied by the department in lieu of the normal refresher training course test.

70.5(7) The department shall approve the state certification examinations for the disciplines of lead inspector/risk assessor, elevated blood lead (EBL) inspector/risk assessor, lead abatement contractor, and project designer. The state certification examination shall be administered by selected community college testing centers in Iowa. A community college testing center shall set the fee for administering the state certification examination to each applicant and shall collect the fee from each applicant.

a. An individual must achieve a score of at least 80 percent on the examination. An individual may take the state certification examination no more than three times within six months of receiving a certificate of completion from an approved course.

b. If an individual does not pass the state certification examination within six months of receiving a certificate of completion from an approved course, the individual must retake the appropriate approved course before reapplying for certification.

70.5(8) Reciprocity. Each applicant for certification who is certified in any of the disciplines specified in this rule in another state may request reciprocal certification. The department shall evaluate the requirements for certification to determine that the requirements for certification in such other state are as protective of health and the environment as the requirements for certification in Iowa. For all disciplines except lead-safe renovator, if the department determines that the requirements for certification in such other state are as protective of health and the environment as the requirements for certification in Iowa, the applicant may be certified after passing a proctored test covering Iowa-specific lead information with a score of at least 80 percent. For a lead-safe renovator, if the department determines that the requirements for certification in such other state are as protective of health and the environment as the requirements for certification in Iowa, the applicant may be certified after signing a statement indicating that the applicant has read and understands Iowa-specific lead information provided by the department. Each applicant for certification pursuant to this subrule shall submit the appropriate application accompanied by the fee for each discipline as specified in 641—70.5(135).

[**ARC 8502B**, IAB 2/10/10, effective 1/13/10]

641—70.6(135) Work practice standards for lead professionals conducting lead-based paint activities in target housing and child-occupied facilities. All lead-based paint activities shall be performed according to the work practice standards in 641—70.6(135), and a certified individual must perform that activity in compliance with the appropriate requirements below.

70.6(1) A certified lead inspector/risk assessor or a certified elevated blood lead (EBL) inspector/risk assessor must conduct a lead-free inspection according to the following standards. A lead-free inspection shall be conducted only by a certified lead inspector/risk assessor or a certified elevated blood lead (EBL) inspector/risk assessor.

a. When conducting a lead-free inspection in a residential dwelling, the certified lead inspector/risk assessor or elevated blood lead (EBL) inspector/risk assessor shall use the following procedures:

(1) The certified lead inspector/risk assessor or elevated blood lead (EBL) inspector/risk assessor shall test paint in each room, including each exterior side.

(2) Except for components known to have been replaced after December 31, 1977, the certified lead inspector/risk assessor or elevated blood lead (EBL) inspector/risk assessor shall test each testing combination in each room. On windows, the window frame, interior windowsill, window sash, and window trough shall each be considered a separate testing combination. Except for walls, one sample shall be taken for each testing combination in a room. Each wall in a room shall be tested. The certified

lead inspector/risk assessor or elevated blood lead (EBL) inspector/risk assessor shall require one of the following two types of evidence to determine that components were replaced after 1977:

1. Detailed specifications showing which components were to be replaced, restored, enclosed, or encapsulated and evidence that the work was actually completed such as receipts for building materials, city building records showing a date of remodeling, or a final inspection by the city or another inspector showing that the work was actually completed.

2. A certification under penalty of perjury per Iowa Code section 622.1 from the contractor who did the work or from the person(s) who owned the property at the time outlining all of the components that were removed and replaced.

If one of these two types of evidence is not available, the certified lead inspector/risk assessor or elevated blood lead (EBL) inspector/risk assessor shall test the component.

(3) The certified lead inspector/risk assessor or elevated blood lead (EBL) inspector/risk assessor shall note any components where lead-based paint has been enclosed or encapsulated. The certified lead inspector/risk assessor or elevated blood lead (EBL) inspector/risk assessor shall not make a determination that the residential dwelling is lead-free where components that are painted with lead-based paint have been enclosed or encapsulated.

(4) Paint shall be tested using adequate quality control by X-ray fluorescence (XRF) or by laboratory analysis using a recognized laboratory to determine the presence of lead-based paint on a surface. If testing by laboratory analysis, the certified lead inspector/risk assessor or elevated blood lead (EBL) inspector/risk assessor shall collect paint samples using the documented methodologies specified in guidance documents issued by the department. If testing by X-ray fluorescence, the certified lead inspector/risk assessor or elevated blood lead (EBL) inspector/risk assessor shall use the following methodologies:

1. The certified lead inspector/risk assessor or elevated blood lead (EBL) inspector/risk assessor shall use an X-ray fluorescence analyzer that has a performance characteristics sheet and shall use the X-ray fluorescence analyzer according to the performance characteristics sheet.

2. The certified lead inspector/risk assessor or elevated blood lead (EBL) inspector/risk assessor shall use standards provided by the manufacturer and the NIST 1.02 standard film for calibration of the X-ray fluorescence analyzer.

3. The certified lead inspector/risk assessor or elevated blood lead (EBL) inspector/risk assessor shall take calibration readings consisting of an average of three readings at the beginning of the inspection, every four hours, and at the end of the inspection.

4. Prior to taking the final set of calibration readings and if recommended by the performance characteristics sheet, the certified lead inspector/risk assessor or elevated blood lead (EBL) inspector/risk assessor shall conduct substrate correction for all XRF readings less than 4.0 milligrams of lead per square centimeter. For each substrate that requires substrate correction, the certified lead inspector/risk assessor or elevated blood lead (EBL) inspector/risk assessor shall completely remove all paint from an area of two different testing combinations for that substrate. If possible, the areas chosen for substrate correction should have initial XRF readings of less than 2.5 milligrams of lead per square centimeter. For each testing combination, the certified lead inspector/risk assessor or elevated blood lead (EBL) inspector/risk assessor shall remove paint from an area that is at least as large as the XRF probe faceplate. On each of the two areas, the certified lead inspector/risk assessor or elevated blood lead (EBL) inspector/risk assessor shall place the NIST 1.02 standard film over the surface and take three XRF readings with the XRF used to conduct the inspection. The certified lead inspector/risk assessor or elevated blood lead (EBL) inspector/risk assessor shall calculate the arithmetic mean for these six readings and shall subtract 1.02 from this arithmetic mean to obtain the substrate correction value. The certified lead inspector/risk assessor or elevated blood lead (EBL) inspector/risk assessor shall then subtract the substrate correction value from each XRF reading for the substrate requiring substrate correction to obtain the corrected XRF reading. For example, if the six readings taken on the NIST 1.02 standard film were 1.1, 1.3, 1.4, 1.0, 1.2, and 1.1, the arithmetic mean is calculated by the equation (1.1 + 1.3 + 1.4 + 1.0 + 1.2 + 1.1)/6 and is equal to 1.18. The substrate correction value is equal to 1.18 minus 1.02, or 0.16.

5. The certified lead inspector/risk assessor or elevated blood lead (EBL) inspector/risk assessor shall classify each XRF reading that did not require substrate correction and each corrected XRF reading for XRF readings that required substrate correction as positive, negative, or inconclusive, according to the performance characteristics sheet for the XRF. The certified lead inspector/risk assessor or elevated blood lead (EBL) inspector/risk assessor shall not discard XRF readings unless instructed to do so by the performance characteristics sheet or the operating instructions from the manufacturer. If the certified lead inspector/risk assessor or elevated blood lead (EBL) inspector/risk assessor believes that a reading classified as positive is in error, the certified lead inspector/risk assessor or elevated blood lead (EBL) inspector/risk assessor shall collect a paint sample for laboratory analysis. The certified lead inspector/risk assessor or elevated blood lead (EBL) inspector/risk assessor shall change the positive classification to negative only if the results of the laboratory analysis indicate that the surface is not painted with lead-based paint.

6. The certified lead inspector/risk assessor or elevated blood lead (EBL) inspector/risk assessor shall resolve inconclusive readings as defined by the performance characteristics sheet for the XRF by collecting paint samples for laboratory analysis. If instructed by the property owner or the person requesting the report, the certified lead inspector/risk assessor or elevated blood lead (EBL) inspector/risk assessor may assume that inconclusive readings are positive, but shall not assume that inconclusive readings are negative.

7. As described by the performance characteristics sheet, the certified lead inspector/risk assessor or elevated blood lead (EBL) inspector/risk assessor shall conduct retesting of 10 surfaces, calculate the retest tolerance limit, and determine whether the inspection meets the retest tolerance limit. If the retest tolerance limit is not met, then this procedure shall be repeated with 10 additional surfaces. If the retest tolerance limit is not met with the 20 retested surfaces, then all results of the inspection shall be considered invalid.

(5) If each testing combination in the residential dwelling is found to be free of lead-based paint, then the residential dwelling is free of lead-based paint. If any surface in the residential dwelling is found to be painted with lead-based paint, then the residential dwelling is not free of lead-based paint.

(6) If lead-based paint is identified through a lead-free inspection, the certified lead inspector/risk assessor or elevated blood lead (EBL) inspector/risk assessor must conduct a visual inspection to determine the presence of lead-based paint hazards and any other potential lead hazards including bare soil in the dripline of a home where lead-based paint is identified on exterior components or lead-based paint previously existed on exterior components, but has been removed, enclosed, or encapsulated.

(7) A certified lead inspector/risk assessor or a certified elevated blood lead (EBL) inspector/risk assessor shall prepare a written report for each residential dwelling or child-occupied facility where a lead-free inspection is completed. No later than three weeks after the receipt of laboratory results, the certified lead inspector/risk assessor or certified elevated blood lead (EBL) inspector/risk assessor shall send a copy of the report to the property owner and to the person requesting the lead-free inspection, if different. A certified lead inspector/risk assessor or a certified elevated blood lead (EBL) inspector/risk assessor shall maintain a copy of each written report for no less than three years. The report shall include, at least:

1. A statement that the inspection was conducted to determine whether the residential dwelling is free of lead-based paint;
2. Date of inspection;
3. Address of building;
4. Date of construction;
5. Apartment numbers (if applicable);
6. The name, address, and telephone number of the owner or owners of each residential dwelling or child-occupied facility;
7. Name, signature, and certification number of each certified lead inspector/risk assessor or certified elevated blood lead (EBL) inspector/risk assessor conducting the inspection;
8. Name and certification number of the certified firm(s) conducting the inspection;

9. Name, address, and telephone number of each laboratory conducting an analysis of collected samples;

10. Each testing method and sampling procedure employed for paint analysis, including quality control data and, if used, the manufacturer, serial number, software, and operating mode of any X-ray fluorescence (XRF) device;

11. XRF readings taken for calibration and calculations to demonstrate that the XRF is properly calibrated at each required calibration;

12. Specific locations by room of each painted component tested for the presence of lead-based paint and the results for each component expressed in terms appropriate to the sampling method used;

13. The results of retesting of 10 surfaces, calculations to determine the retest tolerance limit, and the determination of whether the inspection meets the retest tolerance limit;

14. If the certified lead inspector/risk assessor or certified elevated blood lead (EBL) inspector/risk assessor determines that the residential dwelling is free of lead-based paint, the report shall contain the following statement:

"The results of this inspection indicate that no lead in amounts greater than or equal to 1.0 mg/cm^2 in paint was found on any building components, using the inspection protocol in Chapter 7 of the HUD Guidelines for the Evaluation and Control of Lead-Based Paint Hazards in Housing (1997). Therefore, this residential dwelling qualifies for the exemption in 24 CFR Part 35 and 40 CFR Part 745 for target housing being leased that is free of lead-based paint, as defined in the rule. However, some painted surfaces may contain levels of lead below 1.0 mg/cm^2, which could create lead dust or lead-contaminated soil hazards if the paint is turned into dust by abrasion, scraping, or sanding. This report should be kept by the owner and all future owners for the life of the residential dwelling. Per the disclosure requirements of 24 CFR Part 35 and 40 CFR Part 745, prospective buyers are entitled to all available inspection reports should the property be resold.";

15. If any lead-based paint is identified, a description of the location, type, and severity of identified lead-based paint hazards, including the classification of each tested surface as to whether it is a lead-based paint hazard, and any other potential lead hazards, including bare soil in the dripline of a home where lead-based paint is identified on exterior components or lead-based paint previously existed on exterior components, but has been removed, enclosed, or encapsulated;

16. A description of interim controls and lead abatement options for each identified lead-based paint hazard and a suggested prioritization for addressing each hazard. If the use of an encapsulant or enclosure is recommended, the report shall recommend a maintenance and monitoring schedule for the encapsulant or enclosure;

17. Information regarding the owner's obligations to disclose known lead-based paint and lead-based paint hazards upon sale or lease of residential property as required by Subpart H of 24 CFR Part 35 and Subpart I of 40 CFR Part 745;

18. Information regarding Iowa's prerenovation notification requirements found in 641—Chapter 69; and information regarding Iowa's regulations for renovation, remodeling and repainting found in 641—Chapter 70; and

19. The report shall contain the following statement:

"The location and nature of this inspection are required to be reported to the Iowa Department of Public Health for tracking purposes. The Iowa Department of Public Health may review this report for compliance purposes. It is a violation of law for anyone other than the certified lead professional signing it to alter this report. This report may be supplemented with additional information, so long as any addendum is signed by a lead inspector/risk assessor or elevated blood lead (EBL) inspector/risk assessor certified according to Iowa Administrative Code 641—70.3(135) and 70.5(135)."

b. When conducting a lead-free inspection in multifamily housing, the certified lead inspector/risk assessor or elevated blood lead (EBL) inspector/risk assessor shall use the following procedures:

(1) A certified lead inspector/risk assessor or elevated blood lead (EBL) inspector/risk assessor may randomly select residential dwellings for testing when conducting a lead-free inspection in multifamily housing. If built before 1960 or if the date of construction is unknown, the multifamily housing shall contain at least 20 similarly constructed and maintained residential dwellings in order

to use random selection. If built from 1960 to 1977, the multifamily housing shall contain at least 10 similarly constructed and maintained residential dwellings in order to use random selection. If the certified lead inspector/risk assessor or elevated blood lead (EBL) inspector/risk assessor does not randomly select the residential dwellings for testing or if there are not enough residential dwellings to randomly select them for sampling, all residential dwellings shall be tested. If random selection is used, the certified lead inspector/risk assessor or elevated blood lead (EBL) inspector/risk assessor conducting the lead-free inspection shall randomly select the residential dwellings to be tested. The property owner, manager, or another interested party shall not specify which residential dwellings are to be tested. The certified lead inspector/risk assessor or elevated blood lead (EBL) inspector/risk assessor shall use Table 1 to determine the number of residential dwellings to randomly select for testing.

Table 1

Minimum Number of Residential Dwellings to be Randomly Selected in Multifamily Housing for Lead-Free Inspection, Risk Assessment, Lead Hazard Screen, or Clearance Testing

Number of Similar Residential Dwellings, Similar Common Areas, or Similar Exteriors in Multifamily Housing	Lead-Free Inspection, Risk Assessment, or Lead Hazard Screen		Clearance Testing
	Number of Pre-1960 Residential Dwellings or Residential Dwellings of Unknown Date of Construction to Randomly Select for Testing	Number of 1960-1977 Residential Dwellings to Randomly Select for Testing	Number of Residential Dwellings to Randomly Select for Clearance Testing
1-9	All	All	All
10-13	All	10	All
14	All	11	All
15	All	12	All
16-17	All	13	All
18	All	14	All
19	All	15	All
20	All	16	All
21-26	20	16	20
27	21	17	21
28	22	18	22
29	23	18	23
30	23	19	23
31	24	19	24
32	25	19	25
33-34	26	19	26
35	27	19	27
36	28	19	28
37	29	19	29
38-39	30	20	30
40-48	31	21	31
49-50	31	22	31
51	32	22	32
52-53	33	22	33
54	34	22	34
55-56	35	22	35

Number of Similar Residential Dwellings, Similar Common Areas, or Similar Exteriors in Multifamily Housing	Lead-Free Inspection, Risk Assessment, or Lead Hazard Screen		Clearance Testing
	Number of Pre-1960 Residential Dwellings or Residential Dwellings of Unknown Date of Construction to Randomly Select for Testing	Number of 1960-1977 Residential Dwellings to Randomly Select for Testing	Number of Residential Dwellings to Randomly Select for Clearance Testing
57-58	36	22	36
59	37	23	37
60-69	38	23	38
70-73	38	24	38
74-75	39	24	39
76-77	40	24	40
78-79	41	24	41
80-88	42	24	42
89-95	42	25	42
96-97	43	25	43
98-99	44	25	44
100-109	45	25	45
110-117	45	26	45
118-119	46	26	46
120-138	47	26	47
139-157	48	26	48
158-159	49	26	49
160-177	49	27	49
178-197	50	27	50
198-218	51	27	51
219-258	52	27	52
259-279	53	27	53
280-299	53	28	53
300-379	54	28	54
380-499	55	28	55
500-776	56	28	56
777-939	57	28	57
940-1004	57	29	57
1005-1022	58	29	58
1023-1032	59	29	59
1033-1039	59	30	59
1040+	5.8%, rounded to the next highest whole number	2.9%, rounded to the next highest whole number	5.8%, rounded to the next highest whole number

(2) A certified lead inspector/risk assessor or elevated blood lead (EBL) inspector/risk assessor may randomly select each type of common area in the multifamily housing, including but not limited to hallways, exterior sides of a building, and laundry rooms, for testing. Each type of common area shall be counted separately. If built before 1960, the multifamily housing shall contain at least 20 of a type of common area in order to use random selection. If built from 1960 to 1977, the multifamily housing shall contain at least 10 of a type of common area in order to use random selection. If the certified lead

inspector/risk assessor or elevated blood lead (EBL) inspector/risk assessor does not randomly select the common areas for testing or if there are not enough common areas to randomly select them for testing, all common areas shall be tested. The certified lead inspector/risk assessor or elevated blood lead (EBL) inspector/risk assessor shall use Table 1 to determine the number of each type of common area to randomly select for testing.

(3) The certified lead inspector/risk assessor or elevated blood lead (EBL) inspector/risk assessor shall test paint in each room of each residential dwelling selected for testing and in each common area selected for testing.

(4) Except for components known to have been replaced after December 31, 1977, the certified lead inspector/risk assessor or elevated blood lead (EBL) inspector/risk assessor shall test each testing combination in each room of a residential dwelling chosen for testing and in each common area chosen for testing. On windows, the window frame, interior windowsill, window sash, and window trough shall each be considered a separate testing combination. Each wall in a room or a common area shall be tested. The certified lead inspector/risk assessor or elevated blood lead (EBL) inspector/risk assessor shall require one of the following two types of evidence to determine that components were replaced after 1977:

1. Detailed specifications showing which components were to be replaced, restored, enclosed, or encapsulated and evidence that the work was actually completed such as receipts for building materials, city building records showing a date of remodeling, or evidence of a final inspection by the city or another inspector showing that the work was actually completed.

2. A certification under penalty of perjury per Iowa Code section 622.1 from the contractor who did the work or from the person(s) who owned the property at the time outlining all of the components that were removed and replaced.

If one of these two types of evidence is not available, the certified lead inspector/risk assessor or elevated blood lead (EBL) inspector/risk assessor shall test the component.

(5) The certified lead inspector/risk assessor or elevated blood lead (EBL) inspector/risk assessor shall note any components where lead-based paint has been enclosed or encapsulated. The certified lead inspector/risk assessor or elevated blood lead (EBL) inspector/risk assessor shall not make a determination that a component or the multifamily housing is lead-free where components that are painted with lead-based paint have been enclosed or encapsulated.

(6) Paint shall be tested using adequate quality control by X-ray fluorescence or by laboratory analysis using a recognized laboratory to determine the presence of lead-based paint on a surface. If testing by laboratory analysis, the certified lead inspector/risk assessor or elevated blood lead (EBL) inspector/risk assessor shall collect paint samples using the documented methodologies specified in guidance documents issued by the department. If testing by X-ray fluorescence, the certified lead inspector/risk assessor or elevated blood lead (EBL) inspector/risk assessor shall use the following methodologies:

1. The certified lead inspector/risk assessor or elevated blood lead (EBL) inspector/risk assessor must use an X-ray fluorescence analyzer which has a performance characteristics sheet and shall use the X-ray fluorescence analyzer according to the performance characteristics sheet.

2. The certified lead inspector/risk assessor or elevated blood lead (EBL) inspector/risk assessor shall not use an X-ray fluorescence analyzer using a software version or a mode of operation that could result in inconclusive readings or that recommends substrate correction.

3. The certified lead inspector/risk assessor or elevated blood lead (EBL) inspector/risk assessor shall use standards provided by the manufacturer and the NIST 1.02 standard film for calibration of the X-ray fluorescence analyzer.

4. The certified lead inspector/risk assessor or elevated blood lead (EBL) inspector/risk assessor shall take calibration readings consisting of an average of three readings at the beginning of the inspection, every four hours, and at the end of the inspection.

5. The certified lead inspector/risk assessor or elevated blood lead (EBL) inspector/risk assessor shall classify each XRF reading as positive or negative according to the performance characteristics sheet for the XRF. The certified lead inspector/risk assessor or elevated blood lead (EBL) inspector/risk

assessor shall not discard XRF readings unless instructed to do so by the performance characteristics sheet or the operating instructions from the manufacturer. If the certified lead inspector/risk assessor or elevated blood lead (EBL) inspector/risk assessor believes that a reading classified as positive is in error, the certified lead inspector/risk assessor or elevated blood lead (EBL) inspector/risk assessor shall collect a paint sample for laboratory analysis. The certified lead inspector/risk assessor or elevated blood lead (EBL) inspector/risk assessor shall change the positive classification to negative only if the results of the laboratory analysis indicate that the surface is not painted with lead-based paint.

6. The certified lead inspector/risk assessor or elevated blood lead (EBL) inspector/risk assessor shall count the number of XRF readings taken for each component type. If fewer than 40 of any component type were tested, the certified lead inspector/risk assessor or elevated blood lead (EBL) inspector/risk assessor shall randomly choose additional testing combinations for the component type to reach a total of 40 XRF readings. If fewer than 40 testing combinations are available for testing, the certified lead inspector/risk assessor or elevated blood lead (EBL) inspector/risk assessor shall test each testing combination.

(7) For each component type where at least 40 testing combinations have been tested, the certified lead inspector/risk assessor or elevated blood lead (EBL) inspector/risk assessor shall determine the number and percentage of each component type that is classified as positive or negative. The certified lead inspector/risk assessor or elevated blood lead (EBL) inspector/risk assessor shall classify each component type as follows:

1. Lead-based paint is not present on a component type if all readings are classified as negative.

2. Lead-based paint is present on a component type if at least 15 percent of the readings are classified as positive.

3. Lead-based paint is present on a component type if greater than or equal to 5 percent but less than 15 percent of the XRF readings are classified as positive, unless the certified lead inspector/risk assessor or elevated blood lead (EBL) inspector/risk assessor collects paint samples and obtains laboratory analyses for all positive XRF readings. If the laboratory analyses show that lead-based paint is not present on any components, then the component type is negative. If the laboratory analyses show that lead-based paint is present on any component, then the component type is positive.

4. Lead-based paint is present on a component type if greater than 0 but less than 5 percent of the XRF readings are classified as positive, unless the certified lead inspector/risk assessor or elevated blood lead (EBL) inspector/risk assessor collects paint samples and obtains laboratory analyses for all positive XRF readings or randomly selects a second set of residential dwellings for testing. If the laboratory analyses show that lead-based paint is not present on any components, then the component type is negative. If the laboratory analyses show that lead-based paint is present on any component, then the component type is positive. If a second set of randomly selected residential dwellings is sampled and greater than 0 but less than 2.5 percent of the combined set of results is positive, the component type may be considered as not having lead-based paint developmentwide but rather, having lead-based paint in isolated locations, with a reasonable degree of confidence. Individual components that are classified as positive should be considered lead-based painted and managed or abated appropriately.

5. If a particular component type in the sampled residential dwellings is classified as positive, that same component type in the unsampled residential dwellings is also classified as positive.

(8) If fewer than 40 of a component type are available for testing, each testing combination must be classified individually as positive or negative.

(9) If any component type or individual component is classified as positive, then the certified lead inspector/risk assessor or elevated blood lead (EBL) inspector/risk assessor shall not state that the multifamily housing is free of lead-based paint.

(10) As specified by the performance characteristics sheet, the certified lead inspector/risk assessor or elevated blood lead (EBL) inspector/risk assessor shall conduct retesting of 10 surfaces selected from two residential dwellings, calculate the retest tolerance limit, and determine whether the inspection meets the retest tolerance limit. If the retest tolerance limit is not met, then this procedure shall be repeated with 10 additional surfaces selected from the two residential dwellings. If the retest tolerance limit is not met with the 20 retested surfaces, then all results of the inspection shall be considered invalid.

(11) If lead-based paint is identified on any component or component type, the certified lead inspector/risk assessor or elevated blood lead (EBL) inspector/risk assessor must conduct a visual inspection to determine the presence of lead-based paint hazards and any other potential lead hazards, including bare soil in the dripline of a home where lead-based paint is identified on exterior components or lead-based paint previously existed on exterior components, but has been removed, enclosed, or encapsulated.

(12) A certified lead inspector/risk assessor or a certified elevated blood lead (EBL) inspector/risk assessor shall prepare a written report for each residential dwelling or child-occupied facility inspected. No later than three weeks after the receipt of laboratory results, the certified lead inspector/risk assessor or certified elevated blood lead (EBL) inspector/risk assessor shall send a copy of the report to the property owner and to the person requesting the inspection, if different. A certified lead inspector/risk assessor or a certified elevated blood lead (EBL) inspector/risk assessor shall maintain a copy of each written report for no less than three years. The inspection report shall include, at least:

1. Date of each inspection;
2. Address of each building in the multifamily housing;
3. Date of construction for each building in the multifamily housing;
4. A list of the apartments and common areas in each building in the multifamily housing;
5. The name, address, and telephone number of the owner or owners of each residential dwelling or child-occupied facility;
6. A statement that the inspection was conducted to determine that lead-based paint is not present;
7. The name of the Iowa-certified inspector/risk assessor or elevated blood lead (EBL) inspector/risk assessor who randomly selected the residential dwellings and common areas for testing;
8. The number of residential dwellings and common areas that were selected for testing, how these numbers were determined, and a list of the residential dwellings and common areas that were selected for testing;
9. Name, signature, and certification number of each certified lead inspector/risk assessor or certified elevated blood lead (EBL) inspector/risk assessor conducting the inspection;
10. Name and certification number of the certified firm(s) conducting the inspection;
11. Name, address, and telephone number of each laboratory conducting an analysis of collected samples;
12. Each testing method and sampling procedure employed for paint analysis, including quality control data and, if used, the manufacturer, serial number, software, and operating mode of any X-ray fluorescence (XRF) analyzer;
13. XRF readings taken for calibration and calculations to demonstrate that the XRF is properly calibrated at each required calibration;
14. Specific locations by room of each painted component tested for the presence of lead-based paint and by residential dwelling or common area and the results for each component expressed in terms appropriate to the sampling method used;
15. Component aggregations and the determination of whether lead-based paint is present by component type;
16. The results of retesting of 10 surfaces, calculations to determine the retest tolerance limit, and the determination of whether the inspection meets the retest tolerance limit;
17. If the certified lead inspector/risk assessor or certified elevated blood lead (EBL) inspector/risk assessor determines that the multifamily housing is free of lead-based paint, the report shall contain the following statement:

"The results of this inspection indicate that no lead in amounts greater than or equal to 1.0 mg/cm^2 in paint was found on any building components, using the inspection protocol in Chapter 7 of the HUD Guidelines for the Evaluation and Control of Lead-Based Paint Hazards in Housing (1997). Therefore, this multifamily housing qualifies for the exemption in 24 CFR Part 35 and 40 CFR Part 745 for target housing being leased that is free of lead-based paint, as defined in the rule. However, some painted surfaces may contain levels of lead below 1.0 mg/cm^2, which could create lead dust or lead-contaminated soil hazards if the paint is turned into dust by abrasion, scraping, or sanding. This report should be kept by

the owner and all future owners for the life of the multifamily housing. Per the disclosure requirements of 24 CFR Part 35 and 40 CFR Part 745, prospective buyers are entitled to all available inspection reports should the property be resold.";

18. If any lead-based paint is identified, a description of the location, type, and severity of identified lead-based paint hazards, including the classification of each tested surface as to whether it is a lead-based paint hazard, and any other potential lead hazards, including bare soil in the dripline of a home where lead-based paint is identified on exterior components or lead-based paint previously existed on exterior components, but has been removed, enclosed, or encapsulated;

19. A description of interim controls and lead abatement options for each identified lead-based paint hazard and a suggested prioritization for addressing each hazard. If the use of an encapsulant or enclosure is recommended, the report shall recommend a maintenance and monitoring schedule for the encapsulant or enclosure;

20. Information regarding the owner's obligations to disclose known lead-based paint and lead-based paint hazards upon sale or lease of residential property as required by Subpart H of 24 CFR Part 35 and Subpart I of 40 CFR Part 745;

21. Information regarding Iowa's prerenovation notification requirements found in 641—Chapter 69; and information regarding Iowa's regulations for renovation found in 641—Chapter 70; and

22. The report shall contain the following statement:

"The location and nature of this inspection are required to be reported to the Iowa Department of Public Health for tracking purposes. The Iowa Department of Public Health may review this report for compliance purposes. It is a violation of law for anyone other than the certified lead professional signing it to alter this report. This report may be supplemented with additional information, so long as any addendum is signed by a lead inspector/risk assessor or elevated blood lead (EBL) inspector/risk assessor certified according to Iowa Administrative Code 641—70.3(135) and 70.5(135)."

70.6(2) A certified lead inspector/risk assessor or a certified elevated blood lead (EBL) inspector/risk assessor must conduct lead inspections according to the following standards. Lead inspections shall be conducted only by a certified lead inspector/risk assessor or a certified elevated blood lead (EBL) inspector/risk assessor.

a. When conducting a lead inspection in a residential dwelling or child-occupied facility, the certified lead inspector/risk assessor or elevated blood lead (EBL) inspector/risk assessor shall use the following procedures:

(1) The certified lead inspector/risk assessor or elevated blood lead (EBL) inspector/risk assessor shall test paint in each room, including each exterior side.

(2) The certified lead inspector/risk assessor or elevated blood lead (EBL) inspector/risk assessor shall test each testing combination in each room. On windows, the window frame, interior windowsill, window sash, and window trough shall each be considered a separate testing combination. One sample shall be taken for each testing combination in a room, including the walls. If a testing combination is painted and not tested, it shall be assumed to be painted with lead-based paint.

b. Paint shall be tested using adequate quality control by X-ray fluorescence or by laboratory analysis using a recognized laboratory to determine the presence of lead-based paint on a surface. If testing by laboratory analysis, the certified lead inspector/risk assessor or elevated blood lead (EBL) inspector/risk assessor shall collect paint samples using the documented methodologies specified in guidance documents issued by the department. If testing by X-ray fluorescence, the certified lead inspector/risk assessor or elevated blood lead (EBL) inspector/risk assessor shall use the following methodologies:

(1) The certified lead inspector/risk assessor or elevated blood lead (EBL) inspector/risk assessor shall use an X-ray fluorescence analyzer that has a performance characteristics sheet and shall use the X-ray fluorescence analyzer according to the performance characteristics sheet.

(2) The certified lead inspector/risk assessor or elevated blood lead (EBL) inspector/risk assessor shall use the NIST 1.02 standard film or standards provided by the manufacturer for calibration of the X-ray fluorescence analyzer. The certified lead inspector/risk assessor or elevated blood lead (EBL)

inspector/risk assessor shall not state that any surface is free of lead-based paint unless the NIST 1.02 standard film is used for calibration.

(3) The certified lead inspector/risk assessor or elevated blood lead (EBL) inspector/risk assessor shall take calibration readings consisting of an average of three readings at the beginning of the inspection.

(4) If recommended by the performance characteristics sheet, the certified lead inspector/risk assessor or elevated blood lead (EBL) inspector/risk assessor shall conduct substrate correction for all XRF readings less than 4.0 milligrams of lead per square centimeter. For each substrate that requires substrate correction, the certified lead inspector/risk assessor or elevated blood lead (EBL) inspector/risk assessor shall completely remove all paint from an area of two different testing combinations for that substrate. If possible, the areas chosen for substrate correction should have initial XRF readings of less than 2.5 milligrams of lead per square centimeter. For each testing combination, the certified lead inspector/risk assessor or elevated blood lead (EBL) inspector/risk assessor shall remove paint from an area that is at least as large as the XRF probe faceplate. On each of the two areas, the certified lead inspector/risk assessor or elevated blood lead (EBL) inspector/risk assessor shall place the NIST 1.02 standard film over the surface, and take three XRF readings with the XRF used to conduct the inspection. The certified lead inspector/risk assessor or elevated blood lead (EBL) inspector/risk assessor shall calculate the arithmetic mean for these six readings and shall subtract 1.02 from this arithmetic mean to obtain the substrate correction value. The certified lead inspector/risk assessor or elevated blood lead (EBL) inspector/risk assessor shall then subtract the substrate correction value from each XRF reading for the substrate requiring substrate correction to obtain the corrected XRF reading. For example, if the six readings taken on the NIST 1.02 standard film were 1.1, 1.3, 1.4, 1.0, 1.2, and 1.1, the arithmetic mean is calculated by the equation (1.1 + 1.3 + 1.4 + 1.0 + 1.2 + 1.1)/6 and is equal to 1.18. The substrate correction value is equal to 1.18 minus 1.02, or 0.16. If the certified lead inspector/risk assessor or elevated blood lead (EBL) inspector/risk assessor does not conduct substrate correction where recommended by the performance characteristics sheet, then the certified lead inspector/risk assessor or elevated blood lead (EBL) inspector/risk assessor shall assume that all of the readings are positive and shall not state that a surface is free of lead-based paint.

(5) The certified lead inspector/risk assessor or elevated blood lead (EBL) inspector/risk assessor shall classify each XRF reading that did not require substrate correction and each corrected XRF reading for XRF readings that required substrate correction as positive, negative, or inconclusive, according to the performance characteristics sheet for the XRF. The certified lead inspector/risk assessor or elevated blood lead (EBL) inspector/risk assessor shall not discard XRF readings unless instructed to do so by the performance characteristics sheet or the operating instructions from the manufacturer. If the certified lead inspector/risk assessor or elevated blood lead (EBL) inspector/risk assessor believes that a reading classified as positive is in error, the certified lead inspector/risk assessor or elevated blood lead (EBL) inspector/risk assessor shall collect a paint sample for laboratory analysis. The certified lead inspector/risk assessor or elevated blood lead (EBL) inspector/risk assessor shall change the positive classification to negative only if the results of the laboratory analysis indicate that the surface is not painted with lead-based paint. The certified lead inspector/risk assessor or elevated blood lead (EBL) inspector/risk assessor may assume that all inconclusive readings are positive and classify them as such.

(6) The certified lead inspector/risk assessor or elevated blood lead (EBL) inspector/risk assessor shall resolve inconclusive readings as defined by the performance characteristics sheet for the XRF by collecting paint samples for laboratory analysis. If the certified lead inspector/risk assessor or elevated blood lead (EBL) inspector/risk assessor does not resolve inconclusive readings by laboratory analysis, then the certified lead inspector/risk assessor or elevated blood lead (EBL) inspector/risk assessor shall assume that the inconclusive readings are positive.

c. If lead-based paint is identified through an inspection, the certified lead inspector/risk assessor or elevated blood lead (EBL) inspector/risk assessor must conduct a visual inspection to determine the presence of lead-based paint hazards and any other potential lead hazards, including bare soil in the dripline of a home where lead-based paint is identified on exterior components or lead-based paint previously existed on exterior components, but has been removed, enclosed, or encapsulated.

d. A certified lead inspector/risk assessor or a certified elevated blood lead (EBL) inspector/risk assessor shall prepare a written report for each residential dwelling or child-occupied facility inspected. No later than three weeks after the receipt of laboratory results, the certified lead inspector/risk assessor or certified elevated blood lead (EBL) inspector/risk assessor shall send a copy of the report to the property owner and to the person requesting the inspection, if different. A certified lead inspector/risk assessor or a certified elevated blood lead (EBL) inspector/risk assessor shall maintain a copy of each written report for no less than three years. The inspection report shall include, at least:

(1) A statement that the inspection was conducted to identify lead-based paint and lead-based paint hazards in the residential dwelling;

(2) Date of each inspection;

(3) Address of building;

(4) Date of construction;

(5) Apartment numbers (if applicable);

(6) The name, address, and telephone number of the owner or owners of each residential dwelling or child-occupied facility;

(7) Name, signature, and certification number of each certified lead inspector/risk assessor or certified elevated blood lead (EBL) inspector/risk assessor conducting the inspection;

(8) The name and certification number of the certified firm(s) conducting the inspection;

(9) Name, address, and telephone number of each laboratory conducting an analysis of collected samples;

(10) Each testing method and sampling procedure employed for paint analysis, including quality control data and, if used, the manufacturer, serial number, software, and operating mode of any X-ray fluorescence (XRF) analyzer;

(11) XRF readings taken for calibration and calculations to demonstrate that the XRF is properly calibrated;

(12) Specific locations by room of each painted component tested for the presence of lead-based paint and the results for each component expressed in terms appropriate to the sampling method used;

(13) A statement that all painted or finished components that were not tested must be assumed to contain lead-based paint;

(14) A description of the location, type, and severity of identified lead-based paint hazards, including the classification of each tested surface as to whether it is a lead-based paint hazard, and any other potential lead hazards, including bare soil in the dripline of a home where lead-based paint is identified on exterior components or lead-based paint previously existed on exterior components, but has been removed, enclosed, or encapsulated;

(15) A description of interim controls and lead abatement options for each identified lead-based paint hazard and a suggested prioritization for addressing each hazard. If the use of an encapsulant or enclosure is recommended, the report shall recommend a maintenance and monitoring schedule for the encapsulant or enclosure;

(16) Information regarding the owner's obligations to disclose known lead-based paint and lead-based paint hazards upon sale or lease of residential property as required by Subpart H of 24 CFR Part 35 and Subpart I of 40 CFR Part 745;

(17) Information regarding Iowa's prerenovation notification requirements found in 641—Chapter 69; and information regarding Iowa's regulations for renovation found in 641—Chapter 70; and

(18) The report shall contain the following statement:

"The location and nature of this inspection are required to be reported to the Iowa Department of Public Health for tracking purposes. The Iowa Department of Public Health may review this report for compliance purposes. It is a violation of law for anyone other than the certified lead professional signing it to alter this report. This report may be supplemented with additional information, so long as any addendum is signed by a lead inspector/risk assessor or elevated blood lead (EBL) inspector/risk assessor certified according to Iowa Administrative Code 641—70.3(135) and 70.5(135)."

70.6(3) A certified elevated blood lead (EBL) inspector/risk assessor must conduct elevated blood lead (EBL) inspections according to the following standards. Elevated blood lead (EBL) inspections shall be conducted only by a certified elevated blood lead (EBL) inspector/risk assessor.

a. When conducting an elevated blood lead (EBL) inspection, the certified elevated blood lead (EBL) inspector/risk assessor shall use the following procedures:

(1) The certified elevated blood lead (EBL) inspector/risk assessor shall test paint in each room, including each exterior side.

(2) The certified elevated blood lead (EBL) inspector/risk assessor shall test each testing combination in each room. One sample shall be taken for each testing combination in a room, including walls. On windows, the window frame, interior windowsill, window sash, and window trough shall each be considered a separate testing combination. If a testing combination is painted and not tested, it shall be assumed to be painted with lead-based paint.

b. Paint shall be tested using adequate quality control by X-ray fluorescence or by laboratory analysis using a recognized laboratory to determine the presence of lead-based paint on a surface. If testing by laboratory analysis, the certified elevated blood lead (EBL) inspector/risk assessor shall collect paint samples using the documented methodologies specified in guidance documents issued by the department. If testing by X-ray fluorescence, the certified elevated blood lead (EBL) inspector/risk assessor shall use the following methodologies:

(1) The certified elevated blood lead (EBL) inspector/risk assessor shall use an X-ray fluorescence analyzer that has a performance characteristics sheet and shall use the X-ray fluorescence analyzer according to the performance characteristics sheet.

(2) The certified elevated blood lead (EBL) inspector/risk assessor shall use the NIST 1.02 standard film or standards provided by the manufacturer for calibration of the X-ray fluorescence analyzer. The certified elevated blood lead (EBL) inspector/risk assessor shall not state that any surface is free of lead-based paint unless the NIST 1.02 standard film is used for calibration.

(3) The certified elevated blood lead (EBL) inspector/risk assessor shall take calibration readings consisting of an average of three readings at the beginning of the inspection.

(4) If recommended by the performance characteristics sheet, the certified elevated blood lead (EBL) inspector/risk assessor shall conduct substrate correction for all XRF readings less than 4.0 milligrams of lead per square centimeter. For each substrate that requires substrate correction, the certified elevated blood lead (EBL) inspector/risk assessor shall completely remove all paint from an area of two different testing combinations for that substrate. If possible, the areas chosen for substrate correction should have initial XRF readings of less than 2.5 milligrams of lead per square centimeter. For each testing combination, the certified elevated blood lead (EBL) inspector/risk assessor shall remove paint from an area that is at least as large as the XRF probe faceplate. On each of the two areas, the certified elevated blood lead (EBL) inspector/risk assessor shall place the NIST 1.02 standard film over the surface, and take three XRF readings with the XRF used to conduct the inspection. The certified elevated blood lead (EBL) inspector/risk assessor shall calculate the arithmetic mean for these six readings and shall subtract 1.02 from this arithmetic mean to obtain the substrate correction value. The certified elevated blood lead (EBL) inspector/risk assessor shall then subtract the substrate correction value from each XRF reading for the substrate requiring substrate correction to obtain the corrected XRF reading. For example, if the six readings taken on the NIST 1.02 standard film were 1.1, 1.3, 1.4, 1.0, 1.2, and 1.1, the arithmetic mean is calculated by the equation $(1.1 + 1.3 + 1.4 + 1.0 + 1.2 + 1.1)/6$ and is equal to 1.18. The substrate correction value is equal to 1.18 minus 1.02, or 0.16. If the certified elevated blood lead (EBL) inspector/risk assessor does not conduct substrate correction where recommended by the performance characteristics sheet, then the certified elevated blood lead (EBL) inspector/risk assessor shall assume that all of the readings are positive and shall not state that a surface is free of lead-based paint.

(5) The certified elevated blood lead (EBL) inspector/risk assessor shall classify each XRF reading that did not require substrate correction and each corrected XRF reading for XRF readings that required substrate correction as positive, negative, or inconclusive, according to the performance characteristics

sheet for the XRF. The certified elevated blood lead (EBL) inspector/risk assessor may assume that all inconclusive readings are positive and classify them as such.

(6) The certified elevated blood lead (EBL) inspector/risk assessor shall resolve inconclusive readings as defined by the performance characteristics sheet for the XRF by collecting paint samples for laboratory analysis. If the certified elevated blood lead (EBL) inspector/risk assessor does not resolve inconclusive readings, then the certified elevated blood lead (EBL) inspector/risk assessor shall assume that the inconclusive readings are positive.

c. If lead-based paint is identified through an elevated blood lead (EBL) inspection, the certified elevated blood lead (EBL) inspector/risk assessor must conduct a visual inspection to determine the presence of lead-based paint hazards and any other potential lead hazards, including bare soil in the play area or in the dripline of a home where lead-based paint is identified on exterior components or lead-based paint previously existed on exterior components, but has been removed, enclosed, or encapsulated.

d. No later than two weeks after the receipt of laboratory results, a certified elevated blood lead (EBL) inspector/risk assessor shall prepare a written report for each residential dwelling or child-occupied facility where an elevated blood lead (EBL) inspection has been conducted and shall provide a copy of this report to the property owner and the occupant of the dwelling. The report shall include, at least:

(1) A statement that the elevated blood lead (EBL) inspection was conducted to identify lead-based paint and lead-based paint hazards in the residential dwelling;

(2) Date of each elevated blood lead (EBL) inspection;

(3) Address of building;

(4) Date of construction;

(5) Apartment numbers (if applicable);

(6) The name, address, and telephone number of the owner or owners of each residential dwelling or child-occupied facility;

(7) Name, signature, and certification number of each certified elevated blood lead (EBL) inspector/risk assessor conducting the inspection;

(8) Name and certification number of the certified firm(s) conducting the inspection;

(9) Name, address, and telephone number of each laboratory conducting an analysis of collected samples;

(10) Each testing method and sampling procedure employed for paint analysis, including quality control data and, if used, the manufacturer, serial number, software, and operating mode of any X-ray fluorescence (XRF) analyzer;

(11) XRF readings taken for calibration and calculations to demonstrate that the XRF is properly calibrated;

(12) Specific locations by room of each painted component tested for the presence of lead-based paint and the results for each component expressed in terms appropriate to the sampling method used;

(13) A statement that all painted or finished components that were not tested must be assumed to contain lead-based paint;

(14) A description of the location, type, and severity of identified lead-based paint hazards, including the classification of each tested surface as to whether it is a lead-based paint hazard, and any other potential lead hazards, including bare soil in the play area or in the dripline of a home where lead-based paint is identified on exterior components or lead-based paint previously existed on exterior components, but has been removed, enclosed, or encapsulated;

(15) A description of interim controls and lead abatement options for each identified lead-based paint hazard and a suggested prioritization for addressing each hazard. If the use of an encapsulant or enclosure is recommended, the report shall recommend a maintenance and monitoring schedule for the encapsulant or enclosure;

(16) Information regarding the owner's obligations to disclose known lead-based paint and lead-based paint hazards upon sale or lease of residential property as required by Subpart H of 24 CFR Part 35 and Subpart I of 40 CFR Part 745;

(17) Information regarding Iowa's prerenovation notification requirements found in 641—Chapter 69; and information regarding Iowa's regulations for renovation found in 641—Chapter 70; and

(18) The report shall contain the following statement:

"The location and nature of this inspection are required to be reported to the Iowa Department of Public Health for tracking purposes. The Iowa Department of Public Health may review this report for compliance purposes. It is a violation of law for anyone other than the certified lead professional signing it to alter this report. This report may be supplemented with additional information, so long as any addendum is signed by an elevated blood lead (EBL) inspector/risk assessor certified according to Iowa Administrative Code 641—70.3(135) and 70.5(135)."

e. A certified elevated blood lead (EBL) inspector/risk assessor shall maintain for no fewer than ten years a written record for each residential dwelling or child-occupied facility where an elevated blood lead (EBL) inspection has been conducted. The record shall include, at least:

(1) A copy of the written report required by paragraph 70.6(3)*"d."*

(2) Blood lead test results for the elevated blood lead (EBL) child.

(3) A record of conversations held with the owners and occupants of each residential dwelling or child-occupied facility prior to, during, and after the EBL inspection.

(4) Records of follow-up visits made to each residential dwelling or child-occupied facility where lead-based paint hazards are identified and, when issued, a copy of the clearance report.

70.6(4) A certified lead inspector/risk assessor or a certified elevated blood lead (EBL) inspector/risk assessor must conduct lead hazard screens according to the following standards. Lead hazard screens shall be conducted only by a certified lead inspector/risk assessor or a certified elevated blood lead (EBL) inspector/risk assessor.

a. Background information regarding the physical characteristics of the residential dwelling or child-occupied facility and occupant use patterns that may cause lead-based paint exposure to at least one child under the age of six years shall be collected.

b. A visual inspection of the residential dwelling or child-occupied facility shall be conducted to determine if any deteriorated paint is present and to locate at least two dust sampling locations.

c. If deteriorated paint is present, each surface with deteriorated paint which is determined to have a distinct painting history must be tested for the presence of lead. In addition, friction surfaces where there is evidence of abrasion and impact surfaces that are damaged or otherwise deteriorated from impact and that have a distinct painting history shall be tested for the presence of lead.

d. In residential dwellings, a minimum of two composite or single-surface dust samples shall be collected. One sample shall be collected from the floors and the other from the interior windowsills in rooms, hallways, or stairwells where at least one child under the age of six years is most likely to come in contact with dust.

e. In multifamily dwellings and child-occupied facilities, single-surface or composite dust samples shall also be collected from common areas where at least one child under the age of six years is likely to come in contact with dust.

f. Dust samples shall be collected by wipe samples using the documented methodologies specified in guidance documents issued by the department. The minimum area for a floor wipe sample shall be 0.50 square feet or 72 square inches. The minimum area for a windowsill wipe sample and for a window trough wipe sample shall be 0.25 square feet or 36 square inches. Dust samples shall be analyzed by a recognized laboratory to determine the level of lead.

g. Soil samples shall be collected and analyzed for lead content in exterior play areas and dripline areas where bare soil is present. In addition, soil samples shall be collected and analyzed for lead content from any other areas of the yard where bare soil is present. Soil and paint samples shall be collected using the documented methodologies specified in guidance documents issued by the department and shall be analyzed by a recognized laboratory to determine the level of lead.

h. Paint shall be tested using adequate quality control by X-ray fluorescence or by laboratory analysis using a recognized laboratory to determine the presence of lead-based paint on a surface. If testing by laboratory analysis, the certified lead inspector/risk assessor or elevated blood lead (EBL) inspector/risk assessor shall collect paint samples using the documented methodologies specified in

guidance documents issued by the department. If testing by X-ray fluorescence, the certified lead inspector/risk assessor or elevated blood lead (EBL) inspector/risk assessor shall use the following methodologies:

(1) The certified lead inspector/risk assessor or elevated blood lead (EBL) inspector/risk assessor shall use an X-ray fluorescence analyzer that has a performance characteristics sheet and shall use the X-ray fluorescence analyzer according to the performance characteristics sheet.

(2) The certified lead inspector/risk assessor or elevated blood lead (EBL) inspector/risk assessor shall use the National Institute of Standards and Technology 1.02 milligrams of lead per square centimeter standard reference material or standards provided by the manufacturer for calibration of the X-ray fluorescence analyzer.

(3) The certified lead inspector/risk assessor or elevated blood lead (EBL) inspector/risk assessor shall take calibration readings consisting of an average of three readings at the beginning of the inspection.

(4) If recommended by the performance characteristics sheet, the certified lead inspector/risk assessor or elevated blood lead (EBL) inspector/risk assessor shall conduct substrate correction for all XRF readings less than 4.0 milligrams of lead per square centimeter. For each substrate that requires substrate correction, the certified lead inspector/risk assessor or elevated blood lead (EBL) inspector/risk assessor shall completely remove all paint from an area of two different testing combinations for that substrate. If possible, the areas chosen for substrate correction should have initial XRF readings of less than 2.5 milligrams of lead per square centimeter. For each testing combination, the certified lead inspector/risk assessor or elevated blood lead (EBL) inspector/risk assessor shall remove paint from an area that is at least as large as the XRF probe faceplate. On each of the two areas, the certified lead inspector/risk assessor or elevated blood lead (EBL) inspector/risk assessor shall place the NIST 1.02 standard film over the surface, and take three XRF readings with the XRF used to conduct the inspection. The certified lead inspector/risk assessor or elevated blood lead (EBL) inspector/risk assessor shall calculate the arithmetic mean for these six readings and shall subtract 1.02 from this arithmetic mean to obtain the substrate correction value. The certified lead inspector/risk assessor or elevated blood lead (EBL) inspector/risk assessor shall then subtract the substrate correction value from each XRF reading for the substrate requiring substrate correction to obtain the corrected XRF reading. For example, if the six readings taken on the NIST 1.02 standard film were 1.1, 1.3, 1.4, 1.0, 1.2, and 1.1, the arithmetic mean is calculated by the equation $(1.1 + 1.3 + 1.4 + 1.0 + 1.2 + 1.1)/6$ and is equal to 1.18. The substrate correction value is equal to 1.18 minus 1.02, or 0.16. If the certified lead inspector/risk assessor or elevated blood lead (EBL) inspector/risk assessor does not conduct substrate correction where recommended by the performance characteristics sheet, then the certified lead inspector/risk assessor or elevated blood lead (EBL) inspector/risk assessor shall assume that all the readings are positive and shall not state that a surface is free of lead-based paint.

(5) The certified lead inspector/risk assessor or elevated blood lead (EBL) inspector/risk assessor shall classify each XRF reading that did not require substrate correction and each corrected XRF reading for XRF readings that required substrate correction as positive, negative, or inconclusive, according to the performance characteristics sheet for the XRF. The certified lead inspector/risk assessor or elevated blood lead (EBL) inspector/risk assessor shall not discard XRF readings unless instructed to do so by the performance characteristics sheet or the operating instructions from the manufacturer. If the certified lead inspector/risk assessor or elevated blood lead (EBL) inspector/risk assessor believes that a reading classified as positive is in error, the certified lead inspector/risk assessor or elevated blood lead (EBL) inspector/risk assessor shall collect a paint sample for laboratory analysis. The certified lead inspector/risk assessor or elevated blood lead (EBL) inspector/risk assessor shall change the positive classification to negative only if the results of the laboratory analysis indicate that the surface is not painted with lead-based paint. The certified lead inspector/risk assessor or elevated blood lead (EBL) inspector/risk assessor may assume that all inconclusive readings are positive and classify them as such.

(6) The certified lead inspector/risk assessor or elevated blood lead (EBL) inspector/risk assessor shall resolve inconclusive readings as defined by the performance characteristics sheet for the XRF by collecting paint samples for laboratory analysis. If the certified lead inspector/risk assessor or elevated

blood lead (EBL) inspector/risk assessor does not resolve inconclusive readings by laboratory analysis, then the certified lead inspector/risk assessor or elevated blood lead (EBL) inspector/risk assessor shall assume that the inconclusive readings are positive.

i. The following standards shall be used to determine whether a residential dwelling or child-occupied facility fails a lead hazard screen:

(1) A residential dwelling or child-occupied facility shall fail a lead hazard screen if any deteriorated paint or paint on friction or impact surfaces is found to be lead-based paint.

(2) A residential dwelling shall fail a lead hazard screen if any floor dust lead level in a single-surface or composite-surface dust sample is greater than or equal to 25 micrograms per square foot.

(3) A residential dwelling shall fail a lead hazard screen if any interior windowsill dust level in a single-surface or composite-surface dust sample is greater than or equal to 125 micrograms per square foot.

(4) A residential dwelling or child-occupied facility shall fail a lead hazard screen if any bare soil is found to be a soil-lead hazard.

j. When conducting a lead hazard screen in multifamily housing, a certified lead inspector/risk assessor or certified elevated blood lead (EBL) inspector/risk assessor may sample each residential dwelling or choose residential dwellings for sampling by random selection, targeted selection, or worst case selection.

(1) If built before 1960 or if the date of construction is unknown, the multifamily housing shall contain at least 20 similarly constructed and maintained residential dwellings in order to use random selection. If built from 1960 to 1977, the multifamily housing shall contain at least 10 similarly constructed and maintained residential dwellings in order to use random selection. The certified lead inspector/risk assessor or elevated blood lead (EBL) inspector/risk assessor shall use Table 1 to determine the number of residential dwellings to randomly select for testing.

(2) If the multifamily housing contains five or more similar residential dwellings, the certified lead inspector/risk assessor or elevated blood lead (EBL) inspector/risk assessor may use targeted selection. If using targeted selection, the certified lead inspector/risk assessor or elevated blood lead (EBL) inspector/risk assessor shall use Table 2 to determine the number of residential dwellings to test. If the multifamily housing has fewer than five similar dwellings, all residential dwellings shall be tested. Residential dwellings chosen by targeted selection shall meet as many of the following criteria as possible:

1. The residential dwelling has been cited with a housing or building code violation within the past year.

2. The property owner believes that the residential dwelling is in poor condition.

3. The residential dwelling contains two or more children between the ages of six months and six years. The certified lead inspector/risk assessor or elevated blood lead (EBL) inspector/risk assessor shall give preference to residential dwellings that house the largest number of children.

4. The residential dwelling serves as a day care facility.

5. The residential dwelling has been prepared for reoccupancy within the past three months.

If additional residential dwellings are needed to meet the minimum number specified in Table 2, the certified lead inspector/risk assessor or elevated blood lead (EBL) inspector/risk assessor shall select them randomly. If too many residential dwellings meet the criteria, residential dwellings shall be eliminated randomly.

Table 2
Minimum Number of Residential Dwellings in Multifamily Housing for Risk Assessment or Lead Hazard Screen Through Targeted Selection

Number of Similar Residential Dwellings	Number of Residential Dwellings to Sample*
1-4	All
5-20	4 residential dwellings or 50% (whichever is greater)**
21-75	10 residential dwellings or 20% (whichever is greater)**
76-125	17
126-175	19
176-225	20
226-300	21
301-400	22
401-500	23
501+	24 + 1 residential dwelling for each additional increment of 100 residential dwellings or less

*Does not include residential dwellings housing children with elevated blood lead levels.
**For percentages, round up to determine number of residential dwellings to be sampled.

k. If the multifamily housing contains five or more similar residential dwellings, the certified lead inspector/risk assessor or elevated blood lead (EBL) inspector/risk assessor may use worst case selection. If using worst case selection, the certified lead inspector/risk assessor or elevated blood lead (EBL) inspector/risk assessor shall use Table 2 to determine the number of residential dwellings to test. If the multifamily housing has fewer than five similar dwellings, all residential dwellings shall be tested.

l. The following standards shall be used to determine whether multifamily housing fails a lead hazard screen:

(1) The certified lead inspector/risk assessor or elevated blood lead (EBL) inspector/risk assessor shall calculate the arithmetic mean of the dust lead levels for carpeted floors, uncarpeted floors, and interior windowsills. If the arithmetic mean for carpeted floors or uncarpeted floors is greater than or equal to 25 micrograms per square foot, the multifamily housing shall fail the lead hazard screen. If the arithmetic mean for interior windowsills is greater than or equal to 125 micrograms per square foot, the multifamily housing shall fail the lead hazard screen. If the arithmetic mean for carpeted floors or uncarpeted floors is less than 25 micrograms per square foot, but some of the samples have dust lead levels that are greater than or equal to 25 micrograms per square foot, then the residential dwellings where these samples were taken and all other similar residential dwellings in the multifamily housing shall fail the lead hazard screen. If the arithmetic mean for interior windowsills is less than 125 micrograms per square foot, but some of the samples have dust lead levels that are greater than or equal to 125 micrograms per square foot, then the residential dwellings where these samples were taken and all other similar residential dwellings in the multifamily housing shall fail the lead hazard screen.

(2) The certified lead inspector/risk assessor or elevated blood lead (EBL) inspector/risk assessor shall evaluate the results of paint sampling by component and location. If all components at a given location are determined to be painted with lead-based paint or are determined to not be painted with lead-based paint, the certified lead inspector/risk assessor or elevated blood lead (EBL) inspector/risk assessor may assume this condition is true for all similar residential dwellings. The certified lead inspector/risk assessor or elevated blood lead (EBL) inspector/risk assessor shall not assume that the multifamily housing is free of lead-based paint. If a component at a given location is found to be painted with lead-based paint in some residential dwellings and not painted with lead-based paint in other residential dwellings, the certified lead inspector/risk assessor or elevated blood lead (EBL) inspector/risk assessor shall assume that the component is a lead-based paint hazard in all similar residential dwellings. If a component in a residential dwelling is determined or assumed to be

lead-based paint, then the entire group of similar residential dwellings in the multifamily housing shall fail the lead hazard screen.

(3) Multifamily housing shall fail a lead hazard screen if any bare soil is found to be a soil-lead hazard.

m. A certified lead inspector/risk assessor or a certified elevated blood lead (EBL) inspector/risk assessor shall prepare a written report for each residential dwelling or child-occupied facility where a lead hazard screen is conducted. No later than three weeks after the receipt of laboratory results, the certified lead inspector/risk assessor or certified elevated blood lead (EBL) inspector/risk assessor shall send a copy of the report to the property owner and to the person requesting the lead hazard screen, if different. A certified lead inspector/risk assessor or a certified elevated blood lead (EBL) inspector/risk assessor shall maintain a copy of each written report for no less than three years. The report shall include, at least:

(1) Date of each lead hazard screen.

(2) Address of building.

(3) Date of construction.

(4) Apartment numbers (if applicable).

(5) The name, address, and telephone number of the owner or owners of each residential dwelling or child-occupied facility.

(6) Name, signature, and certification number of each certified lead inspector/risk assessor or certified elevated blood lead (EBL) inspector/risk assessor conducting the lead hazard screen.

(7) Name and certification number of the certified firm(s) conducting the lead hazard screen.

(8) Name, address, and telephone number of each recognized laboratory conducting an analysis of collected samples, including the identification number for each such laboratory recognized by EPA under Section 405(b) of the Toxic Substances Control Act (15 U.S.C. 2685(b)).

(9) Results of the visual inspection.

(10) Each testing method and sampling procedure employed for paint analysis, including quality control data and, if used, the manufacturer, serial number, software, and operating mode of any X-ray fluorescence (XRF) analyzer.

(11) If used, XRF readings taken for calibration and calculations to demonstrate that the XRF is properly calibrated.

(12) Specific locations by room of each painted component tested for the presence of lead-based paint and the results for each component tested expressed in terms appropriate to the sampling method used.

(13) All results of laboratory analysis of collected paint, dust, and soil samples. The results of dust sampling shall be reported in micrograms of lead per square foot, and the results of soil sampling shall be reported in parts per million of lead. Results shall not be reported as "not detectable."

(14) Any other sampling results.

(15) A statement that all painted or finished components that were not tested must be assumed to contain lead-based paint.

(16) Background information collected regarding the physical characteristics of the residential dwelling or child-occupied facility and occupant use patterns that may cause lead-based paint exposure to at least one child under the age of six years.

(17) Whether the residential dwelling or child-occupied facility passed or failed the lead hazard screen and recommendations, if warranted, for a follow-up lead inspection or risk assessment, and, as appropriate, any further actions.

(18) Information regarding the owner's obligations to disclose known lead-based paint and lead-based paint hazards upon sale or lease of residential property as required by Subpart H of 24 CFR Part 35 and Subpart I of 40 CFR Part 745.

(19) Information regarding Iowa's prerenovation notification requirements found in 641—Chapter 69; and information regarding Iowa's regulations for renovation found in 641—Chapter 70.

(20) The report shall contain the following statement:

"The location and nature of this inspection are required to be reported to the Iowa Department of Public Health for tracking purposes. The Iowa Department of Public Health may review this report for compliance purposes. It is a violation of law for anyone other than the certified lead professional signing it to alter this report. This report may be supplemented with additional information, so long as any addendum is signed by a lead inspector/risk assessor or elevated blood lead (EBL) inspector/risk assessor certified according to Iowa Administrative Code 641—70.3(135) and 70.5(135)."

70.6(5) A certified lead inspector/risk assessor or a certified elevated blood lead (EBL) inspector/risk assessor must conduct risk assessments according to the following standards. Risk assessments shall be conducted only by a certified lead inspector/risk assessor or a certified elevated blood lead (EBL) inspector/risk assessor.

a. Background information regarding the physical characteristics of the residential dwelling or child-occupied facility and occupant use patterns that may cause lead-based paint exposure to at least one child under the age of six years shall be collected.

b. A visual inspection for risk assessment shall be undertaken to locate the existence of deteriorated paint and other potential lead hazards and to assess the extent and causes of the paint deterioration.

c. If deteriorated paint is present, each surface with deteriorated paint which is determined to have a distinct painting history must be tested for the presence of lead.

d. Friction surfaces where there is evidence of abrasion and impact surfaces that are damaged or otherwise deteriorated from impact and that have a distinct painting history shall be tested for the presence of lead.

e. In residential dwellings, dust samples shall be collected from the interior windowsill, window trough, and floor in all living areas where at least one child is most likely to come in contact with dust. Dust samples shall be analyzed for lead concentration and may be either composite or single-surface samples.

f. In multifamily dwellings, dust samples shall also be collected from interior windowsills, window troughs, and floors in common areas adjacent to the sampled residential dwellings or child-occupied facility and in other common areas where the certified lead inspector/risk assessor or certified elevated blood lead (EBL) inspector/risk assessor determines that at least one child under the age of six years is likely to come in contact with dust. Dust samples shall be analyzed for lead concentration and may be either composite or single-surface samples.

g. In child-occupied facilities, dust samples shall be collected from the interior windowsill, window trough, and floor in each room, hallway, or stairwell utilized by one or more children under the age of six years and in other common areas where the certified lead inspector/risk assessor or certified elevated blood lead (EBL) inspector/risk assessor determines that at least one child under the age of six years is likely to come in contact with dust. Dust samples shall be analyzed for lead concentration and may be either composite or single-surface samples.

h. Soil samples shall be collected and analyzed for lead content in exterior play areas and dripline areas where bare soil is present. In addition, soil samples shall be collected and analyzed for lead content from any other areas of the yard where bare soil is present.

i. Dust samples shall be collected by wipe samples using the documented methodologies specified in guidance documents issued by the department. The minimum area for a floor wipe sample shall be 0.50 square feet. The minimum area for a windowsill wipe sample and for a window trough wipe sample shall be 0.25 square feet. Soil and paint samples shall be collected using the documented methodologies specified in guidance documents issued by the department. Dust and soil samples shall be analyzed by a recognized laboratory to determine the level of lead. The results of dust sampling shall be reported in micrograms of lead per square foot, and the results of soil sampling shall be reported in parts per million of lead. The results shall not be reported as "not detectable."

j. Paint shall be tested using adequate quality control by X-ray fluorescence or by laboratory analysis using a recognized laboratory to determine the presence of lead-based paint on a surface. If testing by laboratory analysis, the certified lead inspector/risk assessor or elevated blood lead (EBL) inspector/risk assessor shall collect paint samples using the documented methodologies specified in

guidance documents issued by the department. If testing by X-ray fluorescence, the certified lead inspector/risk assessor or elevated blood lead (EBL) inspector/risk assessor shall use the following methodologies:

(1) The certified lead inspector/risk assessor or elevated blood lead (EBL) inspector/risk assessor shall use an X-ray fluorescence analyzer that has a performance characteristics sheet and shall use the X-ray fluorescence analyzer according to the performance characteristics sheet.

(2) The certified lead inspector/risk assessor or elevated blood lead (EBL) inspector/risk assessor shall use the NIST 1.02 standard film material or standards provided by the manufacturer for calibration of the X-ray fluorescence analyzer. The certified lead inspector/risk assessor or elevated blood lead (EBL) inspector/risk assessor shall not state that any surface is free of lead-based paint unless the NIST 1.02 standard film is used for calibration.

(3) The certified lead inspector/risk assessor or elevated blood lead (EBL) inspector/risk assessor shall take calibration readings consisting of an average of three readings at the beginning of the inspection.

(4) If recommended by the performance characteristics sheet, the certified lead inspector/risk assessor or elevated blood lead (EBL) inspector/risk assessor shall conduct substrate correction for all XRF readings less than 4.0 milligrams of lead per square centimeter. For each substrate that requires substrate correction, the certified lead inspector/risk assessor or elevated blood lead (EBL) inspector/risk assessor shall completely remove all paint from an area of two different testing combinations for that substrate. If possible, the areas chosen for substrate correction should have initial XRF readings of less than 2.5 milligrams of lead per square centimeter. For each testing combination, the certified lead inspector/risk assessor or elevated blood lead (EBL) inspector/risk assessor shall remove paint from an area that is at least as large as the XRF probe faceplate. On each of the two areas, the certified lead inspector/risk assessor or elevated blood lead (EBL) inspector/risk assessor shall place the NIST 1.02 standard film over the surface, and take three XRF readings with the XRF used to conduct the inspection. The certified lead inspector/risk assessor or elevated blood lead (EBL) inspector/risk assessor shall calculate the arithmetic mean for these six readings and shall subtract 1.02 from this arithmetic mean to obtain the substrate correction value. The certified lead inspector/risk assessor or elevated blood lead (EBL) inspector/risk assessor shall then subtract the substrate correction value from each XRF reading for the substrate requiring substrate correction to obtain the corrected XRF reading. For example, if the six readings taken on the NIST 1.02 standard film were 1.1, 1.3, 1.4, 1.0, 1.2, and 1.1, the arithmetic mean is calculated by the equation $(1.1 + 1.3 + 1.4 + 1.0 + 1.2 + 1.1)/6$ and is equal to 1.18. The substrate correction value is equal to 1.18 minus 1.02, or 0.16. If the certified lead inspector/risk assessor or elevated blood lead (EBL) inspector/risk assessor does not conduct substrate correction where recommended by the performance characteristics sheet, then the certified lead inspector/risk assessor or elevated blood lead (EBL) inspector/risk assessor shall assume that all of the readings are positive and shall not state that a surface is free of lead-based paint.

(5) The certified lead inspector/risk assessor or elevated blood lead (EBL) inspector/risk assessor shall classify each XRF reading that did not require substrate correction and each corrected XRF reading for XRF readings that required substrate correction as positive, negative, or inconclusive, according to the performance characteristics sheet for the XRF. The certified lead inspector/risk assessor or elevated blood lead (EBL) inspector/risk assessor shall not discard XRF readings unless instructed to do so by the performance characteristics sheet or the operating instructions from the manufacturer. If the certified lead inspector/risk assessor or elevated blood lead (EBL) inspector/risk assessor believes that a reading classified as positive is in error, the certified lead inspector/risk assessor or elevated blood lead (EBL) inspector/risk assessor shall collect a paint sample for laboratory analysis. The certified lead inspector/risk assessor or elevated blood lead (EBL) inspector/risk assessor shall change the positive classification to negative only if the results of the laboratory analysis indicate that the surface is not painted with lead-based paint. The certified lead inspector/risk assessor or elevated blood lead (EBL) inspector/risk assessor may assume that all inconclusive readings are positive and classify them as such.

(6) The certified lead inspector/risk assessor or elevated blood lead (EBL) inspector/risk assessor shall resolve inconclusive readings as defined by the performance characteristics sheet for the XRF by

collecting paint samples for laboratory analysis. If the certified lead inspector/risk assessor or elevated blood lead (EBL) inspector/risk assessor does not resolve inconclusive readings by laboratory analysis, then the certified lead inspector/risk assessor or elevated blood lead (EBL) inspector/risk assessor shall assume that the inconclusive readings are positive.

k. When conducting a risk assessment in multifamily housing, a certified lead inspector/risk assessor or certified elevated blood lead (EBL) inspector/risk assessor may sample each residential dwelling or choose residential dwellings for sampling by random selection, targeted selection, or worst case selection.

(1) If built before 1960 or if the date of construction is unknown, the multifamily housing shall contain at least 20 similarly constructed and maintained residential dwellings in order to use random selection. If built from 1960 to 1977, the multifamily housing shall contain at least 10 similarly constructed and maintained residential dwellings in order to use random selection. The certified lead inspector/risk assessor or elevated blood lead (EBL) inspector/risk assessor shall use Table 1 to determine the number of residential dwellings to randomly select for testing.

(2) If the multifamily housing contains five or more similar residential dwellings, the certified lead inspector/risk assessor or elevated blood lead (EBL) inspector/risk assessor may use targeted selection. If using targeted selection, the certified lead inspector/risk assessor or elevated blood lead (EBL) inspector/risk assessor shall use Table 2 to determine the number of residential dwellings to test. If the multifamily housing has fewer than five similar dwellings, all residential dwellings shall be tested. Residential dwellings chosen by targeted selection shall meet as many of the following criteria as possible. If additional residential dwellings are needed to meet the minimum number specified in Table 2, the certified lead inspector/risk assessor or elevated blood lead (EBL) inspector/risk assessor shall select them randomly. If too many residential dwellings meet the criteria, residential dwellings shall be eliminated randomly. Targeted selection criteria are as follows:

1. The residential dwelling has been cited with a housing or building code violation within the past year.

2. The property owner believes that the residential dwelling is in poor condition.

3. The residential dwelling contains two or more children between the ages of six months and six years. The certified lead inspector/risk assessor or elevated blood lead (EBL) inspector/risk assessor shall give preference to residential dwellings that house the largest number of children.

4. The residential dwelling serves as a day care facility.

5. The residential dwelling has been prepared for reoccupancy within the past three months.

(3) If the multifamily housing contains five or more similar residential dwellings, the certified lead inspector/risk assessor or elevated blood lead (EBL) inspector/risk assessor may use worst case selection. If using worst case selection, the certified lead inspector/risk assessor or elevated blood lead (EBL) inspector/risk assessor shall use Table 2 to determine the number of residential dwellings to test. If the multifamily housing has fewer than five similar dwellings, all residential dwellings shall be tested.

(4) The following standards shall be used to determine the extent of lead-based paint hazards throughout multifamily housing that is sampled by random selection, targeted selection, or worst case selection:

1. The certified lead inspector/risk assessor or elevated blood lead (EBL) inspector/risk assessor shall calculate the arithmetic mean of the dust lead levels for carpeted floors, uncarpeted floors, interior windowsills, and window troughs. If the arithmetic mean is greater than or equal to the level defined as a dust lead hazard for the component, then the certified lead inspector/risk assessor or elevated blood lead (EBL) inspector/risk assessor shall determine that a dust lead hazard has been identified on the component throughout the multifamily housing. If the arithmetic mean is less than the level defined as a dust lead hazard for the component, but some of the individual components have dust lead levels that are greater than or equal to the level defined as a dust lead hazard, then the certified lead inspector/risk assessor or elevated blood lead (EBL) inspector/risk assessor shall determine that a dust lead hazard has been identified on the individual components and on all other similar components throughout the multifamily housing.

2. The certified lead inspector/risk assessor or elevated blood lead (EBL) inspector/risk assessor shall evaluate the results of paint sampling by component and location. If all components at a given location are determined to be painted with lead-based paint or are determined to not be painted with lead-based paint, the certified lead inspector/risk assessor or elevated blood lead (EBL) inspector/risk assessor may assume this condition is true for all similar residential dwellings. The certified lead inspector/risk assessor or elevated blood lead (EBL) inspector/risk assessor shall not assume that the multifamily housing is free of lead-based paint. If a component at a given location is found to be painted with lead-based paint in some residential dwellings and not painted with lead-based paint in other residential dwellings, the certified lead inspector/risk assessor or elevated blood lead (EBL) inspector/risk assessor shall assume that the component is a lead-based paint hazard in all similar residential dwellings.

l. A certified lead inspector/risk assessor or a certified elevated blood lead (EBL) inspector/risk assessor shall prepare a written report for each residential dwelling or child-occupied facility where a risk assessment is conducted. No later than three weeks after the receipt of laboratory results, the certified lead inspector/risk assessor or certified elevated blood lead (EBL) inspector/risk assessor shall send a copy of the report to the property owner and to the person requesting the risk assessment, if different. A certified lead inspector/risk assessor or a certified elevated blood lead (EBL) inspector/risk assessor shall maintain a copy of the report for no less than three years. The report shall include, at least:

(1) Date of each risk assessment;

(2) Address of building;

(3) Date of construction;

(4) Apartment numbers (if applicable);

(5) The name, address, and telephone number of the owner or owners of each residential dwelling or child-occupied facility;

(6) Name, signature, and certification number of each certified lead inspector/risk assessor or certified elevated blood lead (EBL) inspector/risk assessor conducting the risk assessment;

(7) Name and certification number of the certified firm(s) conducting the risk assessment;

(8) Name, address, and telephone number of each recognized laboratory conducting an analysis of collected samples, including the identification number for each such laboratory recognized by EPA under Section 405(b) of the Toxic Substances Control Act (15 U.S.C. 2685(b));

(9) Results of the visual inspection;

(10) Each testing method and sampling procedure employed for paint analysis, including quality control data and, if used, the manufacturer, serial number, software, and operating mode of any X-ray fluorescence (XRF) analyzer;

(11) If used, XRF readings taken for calibration and calculations to demonstrate that the XRF is properly calibrated;

(12) Specific locations by room of each painted component tested for the presence of lead-based paint and the results for each component tested expressed in terms appropriate to the sampling method used;

(13) All results of laboratory analysis of collected paint, dust, and soil samples;

(14) Any other sampling results;

(15) A statement that all painted or finished components that were not tested must be assumed to contain lead-based paint;

(16) Background information collected regarding the physical characteristics of the residential dwelling or child-occupied facility and occupant use patterns that may cause lead-based paint exposure to at least one child under the age of six years;

(17) To the extent that they are used as part of the lead-based paint hazard determination, the results of any previous inspections or analyses for the presence of lead-based paint, or other assessments of lead-based paint hazards;

(18) A description of the location, type, and severity of identified lead-based paint hazards, and any other potential lead hazards, including bare soil in the play area or in the dripline of a home where

lead-based paint is identified on exterior components or lead-based paint previously existed on exterior components, but has been removed, enclosed, or encapsulated;

(19) A description of interim controls and lead abatement options for each identified lead-based paint hazard and a suggested prioritization for addressing each hazard. If the use of an encapsulant or enclosure is recommended, the report shall recommend a maintenance and monitoring schedule for the encapsulant or enclosure;

(20) Information regarding the owner's obligations to disclose known lead-based paint and lead-based paint hazards upon sale or lease of residential property as required by Subpart H of 24 CFR Part 35 and Subpart I of 40 CFR Part 745;

(21) Information regarding Iowa's prerenovation notification requirements found in 641—Chapter 69; and information regarding Iowa's regulations for renovation found in 641—Chapter 70; and

(22) The report shall contain the following statement:

"The location and nature of this inspection are required to be reported to the Iowa Department of Public Health for tracking purposes. The Iowa Department of Public Health may review this report for compliance purposes. It is a violation of law for anyone other than the certified lead professional signing it to alter this report. This report may be supplemented with additional information, so long as any addendum is signed by a lead inspector/risk assessor or elevated blood lead (EBL) inspector/risk assessor certified according to Iowa Administrative Code 641—70.3(135) and 70.5(135)."

70.6(6) A certified lead abatement contractor or certified lead abatement worker must conduct lead abatement according to the following standards. Lead abatement shall be conducted only by a certified lead abatement contractor or a certified lead abatement worker.

a. A certified lead abatement contractor must be on site during all work site preparation and during the postabatement cleanup of work areas. At all other times when lead abatement is being conducted, the certified lead abatement contractor shall be on site or available by telephone, pager, or answering service, and be able to be present at the work site in no more than two hours.

b. A certified lead abatement contractor shall ensure that lead abatement is conducted according to all federal, state, and local requirements.

c. A certified lead abatement contractor shall notify the department in writing at least seven days prior to the commencement of lead abatement in a residential dwelling or child-occupied facility. The notification shall include the following information:

(1) The address, including apartment numbers, where lead abatement will be conducted.

(2) The dates when lead abatement will be conducted.

(3) The name, address, telephone number, Iowa certification number, and signature of the contact for the certified firm that will conduct the work.

(4) The name, address, telephone number, Iowa certification number, and signature of the certified lead abatement contractor who will serve as the contact person for the project.

(5) The name, address, and telephone number of the property owner.

(6) Whether the dwelling is owner-occupied or a rental dwelling.

(7) If the dwelling is an occupied rental, the names of the occupants.

(8) The approximate year that the dwelling was built.

(9) A brief description of the lead abatement work to be done.

d. A certified lead abatement contractor shall submit a revised notification to the department if any information in the original notification changes.

e. A certified lead abatement contractor shall ensure that the worksite(s) is accessed only by certified lead professionals according to Iowa Administrative Code 641—70.3(135) and 70.5(135). Noncertified individuals shall not be allowed access to a worksite. A worksite shall remain inaccessible to noncertified individuals until it passes clearance testing.

f. A certified lead abatement contractor or a certified project designer shall develop a written occupant protection plan for all lead abatement projects prior to starting lead abatement and shall implement the occupant protection plan during the lead abatement project. The occupant protection plan shall be unique to each residential dwelling or child-occupied facility. If the occupants will be living at the property where lead abatement is taking place, then the written occupant plan shall be

given to the occupants prior to the start date of the lead abatement project and must contain at least the following information:

(1) A description of the type and location of the physical barriers that will keep occupants out of the designated worksite(s).

(2) An explanation of how the contractor will ensure that the worksite(s) is not entered by the occupants.

(3) An explanation of how the contractor will ensure that the occupants have access to a kitchen, bathroom, and living area that are not in the worksite(s).

g. Approved methods must be used to conduct lead abatement, and prohibited work practices must not be used to conduct lead abatement.

(1) Signs must be posted and readable. All signs must be posted before lead abatement begins and must remain in place until dust-lead clearance has been passed.

1. To the extent practicable, all signage must be posted in the occupants' primary language.

2. The signs must clearly define the work area.

3. The signs must warn occupants and other persons not involved with the lead abatement to remain outside the work area.

4. The signs must be posted at the entrance(s) to all work areas.

(2) The work area must be effectively contained before the lead abatement begins. To be effective, containment must:

1. Isolate the work area so that no dust or debris leaves the work area while the lead abatement is being performed.

2. Be monitored and maintained so that any plastic or other impermeable materials are not torn or displaced.

3. Be installed in such a manner that it does not interfere with occupant and worker egress in an emergency.

(3) For interior lead abatement, containment shall include:

1. The removal or covering of all objects from the work area, including but not limited to furniture, rugs, and window coverings. Objects that are not removed from the work area must be covered with plastic sheeting or other impermeable material with all seams and edges taped or otherwise sealed.

2. Closing and covering all duct openings in the work area. Ducts must be covered with plastic sheeting or other impermeable material that is taped down.

3. Closing windows and doors in the work area. Doors must be covered with plastic sheeting or other impermeable material. Doors used as an entrance to the work area must be covered with plastic sheeting or other impermeable material in a manner that allows workers to pass through while confining dust and debris to the work area.

4. Covering the floor surface, including installed carpet, with taped-down plastic sheeting or other impermeable material in the work area six feet beyond the perimeter of the surfaces undergoing lead abatement or a sufficient distance to contain the dust, whichever is greater.

5. Ensuring that all personnel, tools, and other items, including the exteriors of containers of waste, are free of dust and debris before leaving or being removed from the work area.

(4) For exterior lead abatement, containment shall include:

1. Closing all doors and windows within 20 feet of the lead abatement. On multistory buildings, all doors and windows within 20 feet of the lead abatement on the same story as the lead abatement shall be closed, and all doors and windows on all stories below the lead abatement that are the same horizontal distance from the lead abatement shall be closed.

2. Ensuring that doors within the work areas that will be used while the lead abatement is being performed are covered with plastic sheeting or other impermeable material in a manner that allows workers to pass through while confining dust and debris to the work area.

3. Covering the ground with plastic sheeting or other disposable impermeable material extending 10 feet beyond the perimeter of surfaces undergoing lead abatement or a sufficient distance to collect falling paint debris, whichever is greater, unless the property line prevents 10 feet of such ground cover.

Exterior ground cover shall include anchors or weights to ensure that the covering remains effective even during weather conditions such as high wind.

4. Vertical containment. In certain situations, such as where other buildings are in close proximity to the work area, when conditions are windy, or where the work area abuts a property line, the certified lead abatement contractor or certified lead abatement worker shall erect a system of vertical containment designed to prevent dust and debris from migrating to adjacent property or contaminating the ground, other buildings, or any object beyond the work area.

(5) The following are prohibited work practices:

1. Open-flame burning or torching of lead-based paint.

2. Machine sanding or grinding or abrasive blasting or sandblasting of lead-based paint unless used with high-efficiency particulate air (HEPA) exhaust control that removes particles of 0.3 microns or larger from the air at 99.97 percent or greater efficiency.

3. Uncontained water blasting of lead-based paint.

4. Dry scraping or dry sanding of lead-based paint except in conjunction with the use of a heat gun or around electrical outlets.

5. Operating a heat gun at a temperature at or above 1100 degrees Fahrenheit.

(6) All waste generated during lead abatement shall be contained to prevent the release of dust and debris before the waste is removed from the work area for storage or disposal. Any chutes used to remove waste from the work area shall be covered.

1. At the conclusion of each workday and at the conclusion of the lead abatement, waste that has been collected from lead abatement activities must be stored under containment, in an enclosure, or behind a barrier that prevents release of dust and debris out of the work area and prevents access to dust and debris.

2. All waste from lead abatement must be contained during transportation so that no dust or debris is released.

(7) The work area shall be cleaned so that no dust, debris, or residue remains after lead abatement. Cleaning shall include:

1. The collection of all paint chips and debris and, without dispersing the paint chips and debris, the sealing of the materials in heavy-duty bags.

2. The removal of the protective sheeting used as required in this subrule. The sheeting shall be misted, then the sheeting shall be folded dirty side inward. All sheeting shall be taped shut or otherwise sealed inside heavy-duty bags. Sheeting used to separate work areas from non-work areas must remain in place until after the cleaning and removal of other sheeting. All sheeting shall be disposed of as waste.

3. For interior lead abatement, all objects and surfaces in the work area and within two feet of the work area must be cleaned from high to low in the following manner:

- Walls must either be vacuumed with a HEPA vacuum or wiped with a wet cloth, beginning at the ceiling and working toward the floor.
- All remaining surfaces including objects and fixtures must be thoroughly vacuumed with a HEPA vacuum. For carpeted floors and rugs, the HEPA vacuum must be equipped with a beater bar.
- All remaining surfaces, except for carpeted or upholstered surfaces, must also be wiped with a damp cloth. Uncarpeted floors must be thoroughly mopped using a method that keeps the wash water separate from the rinse water, such as the two-bucket mopping method, or using a wet mopping system.

h. Soil abatement shall be conducted using one of the following methods:

(1) If soil is removed, soil that is a soil-lead hazard shall be replaced by soil with a lead concentration as close to the local background as practicable, but less than 400 parts per million. The soil that is removed shall not be used as topsoil at another residential property or child-occupied facility.

(2) If soil is not removed, the soil that is a soil-lead hazard shall be remediated to meet the definition of "permanently covered soil."

i. If lead-based paint is removed from a surface, the surface shall be repainted or refinished prior to postabatement clearance dust sampling. A certified lead inspector/risk assessor or a certified elevated blood lead (EBL) inspector/risk assessor shall visually verify that lead-based paint was removed from a surface prior to repainting or refinishing.

j. If components painted with lead-based paint are removed, the replacement components shall be installed prior to postabatement clearance testing.

k. Postabatement clearance procedures shall be conducted by a certified lead inspector/risk assessor or a certified elevated blood lead (EBL) inspector/risk assessor. If the abatement is conducted in response to an elevated blood lead (EBL) inspection, clearance must be conducted by a certified elevated blood lead (EBL) inspector/risk assessor. Postabatement clearance testing shall be performed by persons or entities independent of those performing lead abatement, unless the designated party uses qualified in-house employees to conduct postabatement clearance testing. An in-house employee shall not conduct both lead abatement and the postabatement clearance testing for this work. Postabatement clearance testing shall be conducted using the following procedures:

(1) Following a lead abatement, the certified lead inspector/risk assessor or certified elevated blood lead (EBL) inspector/risk assessor shall review the report of the lead inspection, risk assessment, or visual assessment done prior to the lead abatement project and the lead abatement specifications to determine the lead-based paint hazards that were to be abated by the lead abatement project. The certified lead inspector/risk assessor or certified elevated blood lead (EBL) inspector/risk assessor shall perform a visual inspection to determine if all lead-based paint hazards that were to be abated have been abated and to determine if deteriorated paint surfaces or visible amounts of dust, debris, or residue are still present in the rooms where lead abatement was conducted. If lead-based paint hazards that were to be abated by the project or deteriorated paint surfaces or visible amounts of dust, debris, or residue are present in the rooms where lead abatement was conducted, these conditions must be eliminated prior to the continuation of the clearance procedures. However, elimination of deteriorated paint is not required if it has been determined through paint testing or a lead-based paint inspection that the deteriorated paint is not lead-based paint. Following an exterior lead abatement, a visual inspection shall be conducted to determine if all lead-based paint hazards that were to be abated have been abated and to determine if any visible dust or debris remains on any horizontal surfaces in the outdoor living areas close to the abated surface. In addition, a visual inspection shall be conducted to determine the presence of paint chips on the dripline or next to the foundation below any exterior surface that was abated. If lead-based paint hazards that were to be abated by the project are still present, these conditions must be eliminated prior to the continuation of the clearance procedures. If visible dust, debris, or paint chips are present, they must be removed from the site and properly disposed of according to all applicable federal, state, and local standards.

(2) Following the visual inspection and any required postabatement cleanup, the certified lead inspector/risk assessor or certified elevated blood lead (EBL) inspector/risk assessor shall conduct clearance sampling for lead in dust. Clearance sampling may be conducted by employing single-surface sampling or composite dust sampling. Interior dust-lead testing shall be performed for all projects that include window replacement.

(3) Dust samples shall be collected a minimum of one hour after the completion of final postabatement cleanup activities.

(4) Dust samples shall be collected by wipe samples using the documented methodologies specified in guidance documents issued by the department. The minimum area for a floor wipe sample shall be 0.50 square feet or 72 square inches. The minimum area for a windowsill wipe sample and for a window trough wipe sample shall be 0.25 square feet or 36 square inches. Dust samples shall be analyzed by a recognized laboratory to determine the level of lead.

(5) The following postabatement clearance activities shall be conducted as appropriate based upon the extent or manner of lead abatement activities conducted in the residential dwelling or child-occupied facility:

1. After conducting a lead abatement with containment between abated and unabated areas, three dust samples shall be taken from each of no fewer than four rooms, hallways, or stairwells within the containment area. Dust samples shall be taken from one interior windowsill and from one window trough (if available), and one dust sample shall be taken from the floor of each of no fewer than four rooms, hallways, or stairwells within the containment area. In addition, one dust sample shall be taken from

the floor outside of each individual containment area. If there are fewer than four rooms, hallways, or stairwells within the containment area, then all rooms, hallways, and stairwells shall be sampled.

2. After conducting a lead abatement with no containment between abated and unabated areas, three dust samples shall be taken from each of no fewer than four rooms, hallways, or stairwells in the residential dwelling or child-occupied facility. Dust samples shall be taken from one interior windowsill and from one window trough (if available), and one dust sample shall be taken from the floor of each room, hallway, or stairwell selected. If there are fewer than four rooms, hallways, or stairwells in the residential dwelling or child-occupied facility, then all rooms, hallways, and stairwells shall be sampled.

3. The certified lead abatement contractors and certified lead abatement workers who abate or clean the dwellings shall not have any knowledge of which rooms or surfaces will be selected for the dust samples.

(6) Reserved.

(7) The certified lead inspector/risk assessor or certified elevated blood lead (EBL) inspector/risk assessor shall compare the residual lead level as determined by the laboratory analysis from each single-surface dust sample with applicable single-surface clearance levels for lead in dust on floors, interior windowsills, and window troughs. If the residual lead level in a single-surface dust sample is greater than or equal to the applicable clearance level for a floor, interior windowsill, or window trough, then the failed component in each room with a failed single-surface dust sample and that type of component in each room that was not tested shall be recleaned. Additional clearance samples shall be taken from the failed component in each room where it failed and from enough additional rooms that were not previously tested so that four rooms are sampled. If four rooms are not available, then each available room shall be retested. The certified lead inspector/risk assessor or certified elevated blood lead (EBL) inspector/risk assessor shall evaluate the results of this testing to determine if the recleaned components meet the clearance level. The components must be recleaned and retested until the clearance level is met.

(8) The certified lead inspector/risk assessor or certified elevated blood lead (EBL) inspector/risk assessor shall compare the residual lead level as determined by the laboratory analysis from each composite dust sample with applicable single-surface clearance levels for lead in dust on floors, interior windowsills, and window troughs divided by half the number of subsamples in the composite sample. If the residual lead level in a composite dust sample is greater than or equal to the applicable clearance level divided by half the number of subsamples in the composite sample, then all the components represented by the failed composite dust sample shall be recleaned and retested until clearance levels are met.

l. In multifamily housing consisting of at least 20 similarly constructed and maintained residential dwellings, random selection for the purpose of clearance testing may be conducted if the following conditions are met:

(1) The certified lead inspector/risk assessor or certified elevated blood lead (EBL) inspector/risk assessor shall randomly select the residential dwellings that will be sampled. The certified lead abatement contractors and certified lead abatement workers who abate or clean the dwellings do not know which residential dwellings will be selected for the random selection or which rooms or surfaces will be selected for the dust samples.

(2) The certified lead inspector/risk assessor or certified elevated blood lead (EBL) inspector/risk assessor shall use Table 1 to determine the minimum number of residential dwellings selected for dust sampling. This shall provide a 95 percent level of confidence that no more than 5 percent or 50 of the residential dwellings (whichever is smaller) in the randomly sampled population are greater than or equal to the appropriate clearance levels.

(3) The certified lead inspector/risk assessor or certified elevated blood lead (EBL) inspector/risk assessor shall sample the randomly selected residential dwellings and evaluate them for clearance according to the procedures found in paragraphs 70.6(6)*"i"* through *"k."*

m. No later than three weeks after the property passes clearance, the certified lead inspector/risk assessor or certified elevated blood lead (EBL) inspector/risk assessor shall send a report to the lead abatement contractor that contains the items required by subparagraphs 70.6(6)*"n"*(7) through (9).

n. The certified lead abatement contractor or a certified project designer shall prepare a lead abatement report containing the following information:

(1) A copy of the original and any revised lead abatement notifications.

(2) Starting and completion dates of the lead abatement project.

(3) The name, address, and telephone number of the property owner(s).

(4) The name, address, and signature of the certified lead abatement contractor and of the certified firm contact for the firm conducting the lead abatement.

(5) Whether or not containment was used and, if containment was used, the locations of the containment.

(6) The occupant protection plan required by paragraph 70.6(6)*"f."*

(7) The name, address, and signature of each certified lead inspector/risk assessor or certified elevated blood lead (EBL) inspector/risk assessor conducting clearance sampling, the date on which the clearance testing was conducted, the results of the visual inspection for the presence of lead hazards that were not abated as specified, deteriorated paint and visible dust, debris, residue, or paint chips in the interior rooms and exterior areas where lead abatement was conducted, and the results of all postabatement clearance testing and all soil analyses, if applicable. The results of dust sampling shall be reported in micrograms of lead per square foot by location of sample, and the results of soil sampling shall be reported in parts per million of lead. The results shall not be reported as "not detectable." If random selection was used to select the residential dwellings that were sampled, the report shall state that random selection was used, the number of residential dwellings that were sampled, and how this number was determined.

(8) A statement that the lead abatement was or was not done as specified and that the rooms and exterior areas where lead abatement was conducted did or did not pass the visual clearance and the clearance dust testing. If the certified lead inspector/risk assessor or certified elevated blood lead (EBL) inspector/risk assessor conducting the clearance testing cannot verify that all lead-based paint hazards have been abated, the report shall contain the following statement:

"The purpose of this clearance report is to verify that the lead abatement project was done according to the project specifications. This residential dwelling may still contain hazardous lead-based paint, soil-lead hazards, or dust-lead hazards in the rooms or exterior areas that were not included in the lead abatement project."

(9) The name, address, and telephone number of each recognized laboratory conducting an analysis of clearance samples and soil samples, including the identification number for each such laboratory recognized by EPA under Section 405(b) of the Toxic Substances Control Act (15 U.S.C. 2685(b)).

(10) A detailed written description of the lead abatement project, including lead abatement methods used, locations of rooms and components where lead abatement occurred, reasons for selecting particular lead abatement methods, and any suggested monitoring of encapsulants or enclosures.

(11) Information regarding the owner's obligations to disclose known lead-based paint and lead-based paint hazards upon sale or lease of residential property as required by Subpart H of 24 CFR Part 35 and Subpart I of 40 CFR Part 745.

(12) Information regarding Iowa's prerenovation notification requirements found in 641—Chapter 69; and information regarding Iowa's regulations for renovation found in 641—Chapter 70.

(13) If applicable, a copy of the written consent or waiver required by subrule 70.6(13).

o. The lead abatement report shall be completed no later than 30 days after the lead abatement project passes clearance testing.

p. The certified lead abatement contractor shall maintain all reports and plans required in this subrule for a minimum of three years.

q. The certified lead abatement contractor shall provide a copy of all reports required by this subrule to the building owner and to the person who contracted for the lead abatement, if different.

70.6(7) A certified lead inspector/risk assessor, a certified elevated blood lead (EBL) inspector/risk assessor, or a certified sampling technician must conduct visual risk assessments according to the following standards. Visual risk assessments shall be conducted only by a certified lead inspector/risk assessor, a certified elevated blood lead (EBL) inspector/risk assessor, or a certified sampling technician.

a. Background information regarding the physical characteristics of the residential dwelling or child-occupied facility and occupant use patterns that may cause lead-based paint exposure to at least one child under the age of six years shall be collected.

b. A visual inspection for risk assessment shall be undertaken to locate the existence of deteriorated paint and other potential lead-based paint hazards and to assess the extent and causes of the paint deterioration. A certified lead inspector/risk assessor, a certified elevated blood lead (EBL) inspector/risk assessor, or a certified sampling technician shall assess each component in each room, including each exterior side. A certified lead inspector/risk assessor, a certified elevated blood lead (EBL) inspector/risk assessor, or a certified sampling technician shall identify the following conditions as potential lead-based paint hazards:

(1) All interior and exterior surfaces with deteriorated paint.

(2) Horizontal hard surfaces, including but not limited to floors and windowsills, that are not smooth or cleanable.

(3) Dust-generating conditions, including but not limited to conditions causing rubbing, binding, or crushing of surfaces known or presumed to be coated with lead-based paint.

(4) Bare soil in the play area and dripline of the home.

c. A certified lead inspector/risk assessor, a certified elevated blood lead (EBL) inspector/risk assessor, or a certified sampling technician shall prepare a written report for each residential dwelling or child-occupied facility where a visual risk assessment is conducted. No later than three weeks after completing the visual risk assessment, the certified lead inspector/risk assessor, certified elevated blood lead (EBL) inspector/risk assessor, or certified sampling technician shall send a copy of the report to the property owner and to the person requesting the visual risk assessment, if different. A certified lead inspector/risk assessor, a certified elevated blood lead (EBL) inspector/risk assessor, or a certified sampling technician shall maintain a copy of the report for no less than three years. The report shall include, at least:

(1) Date of each visual risk assessment;

(2) Address of building;

(3) Date of construction;

(4) Apartment numbers (if applicable);

(5) The name, address, and telephone number of the owner or owners of each residential dwelling or child-occupied facility;

(6) Name, signature, and certification number of each certified sampling technician, certified lead inspector/risk assessor, or certified elevated blood lead (EBL) inspector/risk assessor conducting the visual risk assessment;

(7) Name and certification number of the certified firm(s) conducting the visual risk assessment;

(8) A statement that all painted or finished components must be assumed to contain lead-based paint;

(9) Specific locations of painted or finished components identified as likely to contain lead-based paint and likely to be lead-based paint hazards;

(10) Specific locations of bare soil in the play area and the dripline of a home;

(11) Information for the owner and occupants on how to reduce lead hazards in the residential dwelling or child-occupied facility;

(12) Information regarding the owner's obligations to disclose known lead-based paint and lead-based paint hazards upon sale or lease of residential property as required by Subpart H of 24 CFR Part 35 and Subpart I of 40 CFR Part 745;

(13) Information regarding Iowa's prerenovation notification requirements found in 641—Chapter 69; and information regarding Iowa's regulations for renovation found in 641—Chapter 70; and

(14) The report shall contain the following statement:

"The location and nature of this inspection are required to be reported to the Iowa Department of Public Health for tracking purposes. The Iowa Department of Public Health may review this report for compliance purposes. It is a violation of law for anyone other than the certified lead professional signing it to alter this report. This report may be supplemented with additional information, so long as any

addendum is signed by a sampling technician, lead inspector/risk assessor or elevated blood lead (EBL) inspector/risk assessor certified according to Iowa Administrative Code 641—70.3(135) and 70.5(135)."

70.6(8) A certified lead inspector/risk assessor, a certified elevated blood lead (EBL) inspector/risk assessor, or a certified sampling technician must conduct clearance testing according to the following standards. Clearance testing following lead abatement shall be conducted only by a certified lead inspector/risk assessor or a certified elevated blood lead (EBL) inspector/risk assessor. Clearance testing after renovation and clearance testing after interim controls, paint stabilization, standard treatments, ongoing lead-based paint maintenance, and rehabilitation pursuant to 24 CFR Part 35 shall be conducted only by certified sampling technicians, certified lead inspector/risk assessors, or certified elevated blood lead (EBL) inspector/risk assessors. If the abatement, renovation, or interim controls, paint stabilization, standard treatments, ongoing lead-based paint maintenance, or rehabilitation pursuant to 24 CFR Part 35 is conducted in response to an elevated blood lead (EBL) inspection, clearance must be conducted by a certified elevated blood lead (EBL) inspector/risk assessor.

a. Clearance testing following lead abatement shall be conducted according to paragraphs 70.6(6)*"i"* through *"m."*

b. Clearance testing after renovation and clearance testing after interim controls, paint stabilization, standard treatments, ongoing lead-based paint maintenance, or rehabilitation pursuant to 24 CFR Part 35 shall be conducted according to the following standards:

(1) A certified sampling technician shall perform clearance testing only for a single-family property or for individual residential dwellings and associated common areas in multifamily housing. A certified sampling technician shall not perform clearance testing using random selection of residential dwellings or common areas in multifamily housing.

(2) A certified lead inspector/risk assessor, a certified elevated blood lead (EBL) inspector/risk assessor, or a certified sampling technician shall review the report of the lead inspection, risk assessment, or visual assessment done prior to interim controls, paint stabilization, standard treatments, ongoing lead-based paint maintenance, or rehabilitation conducted pursuant to 24 CFR Part 35 and the project specifications to determine the lead-based paint hazards that were to be controlled by the project. A certified lead inspector/risk assessor, a certified elevated blood lead (EBL) inspector/risk assessor, or a certified sampling technician shall perform a visual inspection to determine if all lead-based paint hazards that were to be controlled by the project have been controlled and to determine if deteriorated paint surfaces or visible amounts of dust, debris, or residue are still present in the rooms where interim controls, paint stabilization, standard treatments, ongoing lead-based paint maintenance, or rehabilitation were conducted pursuant to 24 CFR Part 35. If lead-based paint hazards that were to be controlled by the project, deteriorated paint surfaces or visible amounts of dust, debris, or residue are present in these rooms, these conditions must be eliminated prior to the continuation of the clearance testing. However, elimination of deteriorated paint is not required if it has been determined through a lead-based paint inspection that the deteriorated paint is not lead-based paint. If exterior painted surfaces have been disturbed by the interim controls, paint stabilization, standard treatments, ongoing lead-based paint maintenance, or rehabilitation conducted pursuant to 24 CFR Part 35, the visual inspection shall include an assessment to determine if all exterior lead-based paint hazards that were to be controlled by the project have been controlled and to determine if any visible dust or debris remains on any horizontal surfaces in the outdoor living areas close to the affected exterior painted surfaces. In addition, a visual inspection shall be conducted to determine if paint chips are present on the dripline or next to the foundation below any exterior painted surface that was treated. If lead-based paint hazards that were to be controlled by the project are still present, these conditions must be eliminated prior to the continuation of the clearance procedures. If visible dust, debris, or paint chips are present, they must be removed from the site and properly disposed of according to all applicable federal, state, and local standards.

(3) Following the visual inspection and any required cleanup, clearance sampling for lead in dust shall be conducted. Clearance sampling may be conducted by employing single-surface sampling or composite dust sampling.

(4) Dust samples shall be collected a minimum of one hour after the completion of final cleanup activities.

(5) Dust samples shall be collected by wipe samples using the documented methodologies specified in guidance documents issued by the department. The minimum area for a floor wipe sample shall be 0.50 square feet or 72 square inches. The minimum area for a windowsill wipe sample and for a window trough wipe sample shall be 0.25 square feet or 36 square inches. Dust samples shall be analyzed by a recognized laboratory to determine the level of lead.

(6) The following clearance activities shall be conducted as appropriate based upon the extent or manner of renovation or of interim controls, paint stabilization, standard treatments, ongoing lead-based paint maintenance, or rehabilitation conducted pursuant to 24 CFR Part 35 in the residential dwelling or child-occupied facility:

1. After conducting renovation or interim controls, paint stabilization, standard treatments, ongoing lead-based paint maintenance, or rehabilitation pursuant to 24 CFR Part 35, with containment between treated and untreated areas, three dust samples shall be taken from each of no fewer than four rooms, hallways, or stairwells within the containment area. Dust samples shall be taken from one interior windowsill and from one window trough (if available), and one dust sample shall be taken from the floor of each of no fewer than four rooms, hallways, or stairwells within the containment area. In addition, one dust sample shall be taken from the floor outside of each individual containment area. If there are fewer than four rooms, hallways, or stairwells within the containment area, then all rooms, hallways, and stairwells shall be sampled. Interior dust-lead testing shall be performed for all projects that include window replacement.

2. After conducting renovation or interim controls, paint stabilization, standard treatments, ongoing lead-based paint maintenance, or rehabilitation pursuant to 24 CFR Part 35, with no containment between treated and untreated areas, three dust samples shall be taken from each of no fewer than four rooms, hallways, or stairwells in the residential dwelling or child-occupied facility. Dust samples shall be taken from one interior windowsill and window trough (if available), and one dust sample shall be taken from the floor of each room, hallway, or stairwell selected. If there are fewer than four rooms, hallways, or stairwells in the residential dwelling or child-occupied facility, then all rooms, hallways, and stairwells shall be sampled. Interior dust-lead testing shall be performed for all projects that include window replacement.

(7) The contractors conducting the work or cleaning the dwellings shall not know which rooms or surfaces will be selected for the dust samples.

(8) The certified lead inspector/risk assessor, certified elevated blood lead (EBL) inspector/risk assessor, or certified sampling technician shall compare the residual lead level as determined by the laboratory analysis from each single-surface dust sample with applicable single-surface clearance levels for lead in dust on floors, interior windowsills, and window troughs. If the residual lead level in a single-surface dust sample is greater than or equal to the applicable clearance level for a floor, interior windowsill, or window trough, then the failed component in each room with a failed single-surface dust sample and that type of component in each room that was not tested shall be recleaned. Additional clearance samples shall be taken from the failed component in each room where it failed and from enough additional rooms that were not previously tested so that four rooms are sampled. If four rooms are not available, then each available room shall be retested. The certified lead inspector/risk assessor, certified elevated blood lead (EBL) inspector/risk assessor, or certified sampling technician shall evaluate the results of this testing to determine if the recleaned components meet the clearance level. The components must be recleaned and retested until the clearance level is met.

(9) The certified lead inspector/risk assessor, certified elevated blood lead (EBL) inspector/risk assessor, or certified sampling technician shall compare the residual lead level as determined by the laboratory analysis from each composite dust sample with applicable single-surface clearance levels for lead in dust on floors, interior windowsills, and window troughs divided by half the number of subsamples in the composite sample. If the residual lead level in a composite dust sample is greater than or equal to the applicable clearance level divided by half the number of subsamples in the composite sample, then all the components represented by the failed composite dust sample shall be recleaned and retested until clearance levels are met.

c. In multifamily housing consisting of at least 20 similarly constructed and maintained residential dwellings, random selection for the purpose of clearance testing may be conducted if the following conditions are met:

(1) The certified lead inspector/risk assessor or certified elevated blood lead (EBL) inspector/risk assessor shall randomly select the dwellings that will be sampled. The contractors and the workers who conducted the lead abatement, interim controls, paint stabilization, standard treatments, ongoing lead-based paint maintenance, or rehabilitation do not know which residential dwellings will be selected for the random selection.

(2) The certified lead inspector/risk assessor or certified elevated blood lead (EBL) inspector/risk assessor shall use Table 1 to determine the minimum number of dwellings selected for dust sampling. This shall provide a 95 percent level of confidence that no more than 5 percent or 50 of the residential dwellings (whichever is smaller) in the randomly sampled population are greater than or equal to the appropriate clearance levels.

(3) The certified lead inspector/risk assessor or certified elevated blood lead (EBL) inspector/risk assessor shall sample the randomly selected residential dwellings and evaluate them for clearance according to the procedures found in paragraphs 70.6(6)*"h"* through *"j."*

(4) The clearance testing is conducted by a certified lead inspector/risk assessor or a certified elevated blood lead (EBL) inspector/risk assessor.

d. A clearance report must be prepared that provides documentation of the lead abatement, renovation, or interim controls, paint stabilization, standard treatments, ongoing lead-based paint maintenance, or rehabilitation conducted pursuant to 24 CFR Part 35 as well as the clearance testing. When lead abatement is performed, the report shall be a lead abatement report in accordance with paragraph 70.6(6)*"n."* When renovation or interim controls, paint stabilization, standard treatments, ongoing lead-based paint maintenance, or rehabilitation pursuant to 24 CFR Part 35 is performed, the certified lead inspector/risk assessor, certified elevated blood lead (EBL) inspector/risk assessor, or certified sampling technician shall prepare a written report for each residential dwelling or child-occupied facility where clearance testing is conducted. No later than 30 days after the property passes clearance, the certified lead inspector/risk assessor, certified elevated blood lead (EBL) inspector/risk assessor, or certified sampling technician shall send a copy of the report to the property owner and to the person requesting the clearance testing, if different. The clearance report shall include the following information:

(1) The address of the residential property and, if only part of a multifamily property is affected, the specific dwelling units and common areas affected.

(2) The following information regarding the clearance testing:

1. The date(s) of the clearance testing.

2. The name, address, and signature of each certified lead professional performing the clearance examination, including the certification number.

3. The name and certification number of the certified firm(s) conducting the clearance testing.

4. Whether or not containment was used and, if containment was used, the locations of the containment.

5. If random selection was used to select the residential dwellings that were sampled, the report shall state that random selection was used, the number of residential dwellings that were sampled, and how this number was determined.

6. The results of the visual inspection for the presence of deteriorated paint and visible dust, debris, residue, or paint chips in the rooms where renovation or interim controls, paint stabilization, standard treatments, ongoing lead-based paint maintenance, or rehabilitation was conducted pursuant to 24 CFR Part 35.

7. All of the results of the analysis of dust samples, in micrograms per square foot, by location of sample. The results shall not be reported as "not detectable."

8. A statement that the renovation or interim controls, paint stabilization, standard treatments, ongoing lead-based paint maintenance, or rehabilitation conducted pursuant to 24 CFR Part 35 was or was not done as specified and that the rooms and exterior areas where these activities were conducted

did or did not pass the visual clearance and the clearance dust testing. If the certified lead inspector/risk assessor, certified elevated blood lead (EBL) inspector/risk assessor, or certified sampling technician conducting the clearance testing cannot verify that all lead-based paint hazards have been controlled, the report shall contain the following statement:

"The purpose of this clearance report is to verify that this lead hazard control project was done according to the project specifications. This residential dwelling may still contain hazardous lead-based paint, soil-lead hazards, or dust-lead hazards in the rooms or exterior areas that were not included in the lead hazard control project."

9. The name, address, and telephone number of each recognized laboratory conducting an analysis of the dust samples, including the identification number for each such laboratory recognized by EPA under Section 405(b) of the Toxic Substances Control Act (15 U.S.C. 2685(b)).

(3) The following information on the renovation or interim controls, paint stabilization, standard treatments, ongoing lead-based paint maintenance, or rehabilitation pursuant to 24 CFR Part 35 for which clearance testing was performed:

1. The start and completion dates of the renovation, interim controls, paint stabilization, standard treatments, ongoing lead-based paint maintenance, or rehabilitation.

2. The name and address of each firm or organization conducting the renovation, interim controls, paint stabilization, standard treatments, ongoing lead-based paint maintenance, or rehabilitation and the name of each supervisor assigned.

3. A detailed written description of the renovation, interim controls, paint stabilization, standard treatments, ongoing lead-based paint maintenance, or rehabilitation, including the methods used, locations of exterior surfaces, interior rooms, common areas, and components where the hazard reduction activity occurred.

4. If interim control of soil hazards was conducted, a detailed description of the location(s) of the interim controls and the method(s) used.

5. Information regarding the owner's obligations to disclose known lead-based paint and lead-based paint hazards upon sale or lease of residential property as required by Subpart H of 24 CFR Part 35 and Subpart I of 40 CFR Part 745.

6. Information regarding Iowa's prerenovation notification requirements found in 641—Chapter 69; and information regarding Iowa's regulations for renovation found in 641—Chapter 70.

7. The report shall contain the following statement:

"The location and nature of this inspection are required to be reported to the Iowa Department of Public Health for tracking purposes. The Iowa Department of Public Health may review this report for compliance purposes. It is a violation of law for anyone other than the certified lead professional signing it to alter this report. This report may be supplemented with additional information, so long as any addendum is signed by a sampling technician, lead inspector/risk assessor or elevated blood lead (EBL) inspector/risk assessor certified according to Iowa Administrative Code 641—70.3(135) and 70.5(135)."

e. A certified lead inspector/risk assessor or a certified elevated blood lead (EBL) inspector/risk assessor or a certified sampling technician shall maintain a copy of the clearance testing information included in the lead abatement report specified in paragraph 70.6(6)*"m"* for no fewer than three years. A certified lead inspector/risk assessor, a certified elevated blood lead (EBL) inspector/risk assessor, or a certified sampling technician shall maintain a copy of the clearance testing report specified in paragraph 70.6(8)*"d"* for no fewer than three years.

f. Clearance testing shall be performed by persons or entities independent of those performing lead abatement, renovation, interim controls, paint stabilization, standard treatments, ongoing lead-based paint maintenance, or rehabilitation, unless the designated party uses qualified in-house employees to conduct clearance testing. An in-house employee shall not conduct both lead abatement, renovation, interim controls, paint stabilization, standard treatments, ongoing lead-based paint maintenance, or rehabilitation and the clearance examination for this work.

70.6(9) A certified lead inspector/risk assessor or a certified elevated blood lead (EBL) inspector/risk assessor shall conduct paint testing pursuant to 24 CFR Part 35 according to the following standards.

Paint testing pursuant to 24 CFR Part 35 shall be conducted only by a certified lead inspector/risk assessor or a certified elevated blood lead (EBL) inspector/risk assessor.

a. When conducting paint testing in a residential dwelling or child-occupied facility, the certified lead inspector/risk assessor or elevated blood lead (EBL) inspector/risk assessor shall use the following procedures:

(1) The certified lead inspector/risk assessor or elevated blood lead (EBL) inspector/risk assessor shall test paint on each deteriorated paint surface and on each painted surface that will be disturbed or replaced. On windows, the window frame, interior windowsill, window sash, and window trough shall each be tested.

(2) Paint shall be tested using adequate quality control by X-ray fluorescence or by laboratory analysis using a recognized laboratory to determine the presence of lead-based paint on a surface. If testing by laboratory analysis, the certified lead inspector/risk assessor or elevated blood lead (EBL) inspector/risk assessor shall collect paint samples using the documented methodologies specified in guidance documents issued by the department. If testing by X-ray fluorescence, the certified lead inspector/risk assessor or elevated blood lead (EBL) inspector/risk assessor shall use the following methodologies:

1. The certified lead inspector/risk assessor or elevated blood lead (EBL) inspector/risk assessor shall use an X-ray fluorescence analyzer that has a performance characteristics sheet and shall use the X-ray fluorescence analyzer according to the performance characteristics sheet.

2. The certified lead inspector/risk assessor or elevated blood lead (EBL) inspector/risk assessor shall use the NIST 1.02 standard film or standards provided by the manufacturer for calibration of the X-ray fluorescence analyzer. The certified lead inspector/risk assessor or elevated blood lead (EBL) inspector/risk assessor shall not state that any surface is free of lead-based paint unless the NIST 1.02 standard film is used for calibration.

3. The certified lead inspector/risk assessor or elevated blood lead (EBL) inspector/risk assessor shall take calibration readings consisting of an average of three readings at the beginning of the inspection.

4. If recommended by the performance characteristics sheet, the certified lead inspector/risk assessor or elevated blood lead (EBL) inspector/risk assessor shall conduct substrate correction for all XRF readings less than 4.0 milligrams of lead per square centimeter. For each substrate that requires substrate correction, the certified lead inspector/risk assessor or elevated blood lead (EBL) inspector/risk assessor shall completely remove all paint from an area of two different testing combinations for that substrate. If possible, the areas chosen for substrate correction should have initial XRF readings of less than 2.5 milligrams of lead per square centimeter. For each testing combination, the certified lead inspector/risk assessor or elevated blood lead (EBL) inspector/risk assessor shall remove paint from an area that is at least as large as the XRF probe faceplate. On each of the two areas, the certified lead inspector/risk assessor or elevated blood lead (EBL) inspector/risk assessor shall place the NIST 1.02 standard film over the surface, and take three XRF readings with the XRF used to conduct the inspection. The certified lead inspector/risk assessor or elevated blood lead (EBL) inspector/risk assessor shall calculate the arithmetic mean for these six readings and shall subtract 1.02 from this arithmetic mean to obtain the substrate correction value. The certified lead inspector/risk assessor or elevated blood lead (EBL) inspector/risk assessor shall then subtract the substrate correction value from each XRF reading for the substrate requiring substrate correction to obtain the corrected XRF reading. For example, if the six readings taken on the NIST 1.02 standard film were 1.1, 1.3, 1.4, 1.0, 1.2, and 1.1, the arithmetic mean is calculated by the equation $(1.1 + 1.3 + 1.4 + 1.0 + 1.2 + 1.1)/6$ and is equal to 1.18. The substrate correction value is equal to 1.18 minus 1.02, or 0.16. If the certified lead inspector/risk assessor or elevated blood lead (EBL) inspector/risk assessor does not conduct substrate correction where recommended by the performance characteristics sheet, then the certified lead inspector/risk assessor or elevated blood lead (EBL) inspector/risk assessor shall assume that all of the readings are positive and shall not state that a surface is free of lead-based paint.

5. The certified lead inspector/risk assessor or elevated blood lead (EBL) inspector/risk assessor shall classify each XRF reading that did not require substrate correction and each corrected XRF reading

for XRF readings that required substrate correction as positive, negative, or inconclusive, according to the performance characteristics sheet for the XRF. The certified lead inspector/risk assessor or elevated blood lead (EBL) inspector/risk assessor shall not discard XRF readings unless instructed to do so by the performance characteristics sheet or the operating instructions from the manufacturer. If the certified lead inspector/risk assessor or elevated blood lead (EBL) inspector/risk assessor believes that a reading classified as positive is in error, the certified lead inspector/risk assessor or elevated blood lead (EBL) inspector/risk assessor shall collect a paint sample for laboratory analysis. The certified lead inspector/risk assessor or elevated blood lead (EBL) inspector/risk assessor shall change the positive classification to negative only if the results of the laboratory analysis indicate that the surface is not painted with lead-based paint. The certified lead inspector/risk assessor or elevated blood lead (EBL) inspector/risk assessor may assume that all inconclusive readings are positive and classify them as such.

6. The certified lead inspector/risk assessor or elevated blood lead (EBL) inspector/risk assessor shall resolve inconclusive readings as defined by the performance characteristics sheet for the XRF by collecting paint samples for laboratory analysis. If the certified lead inspector/risk assessor or elevated blood lead (EBL) inspector/risk assessor does not resolve inconclusive readings by laboratory analysis, then the certified lead inspector/risk assessor or elevated blood lead (EBL) inspector/risk assessor shall assume that the inconclusive readings are positive.

b. If lead-based paint is identified through paint testing, the certified lead inspector/risk assessor or elevated blood lead (EBL) inspector/risk assessor must conduct a visual inspection to determine the presence of lead-based paint hazards and any other potential lead hazards, including bare soil in the dripline of a home where lead-based paint is identified on exterior components or lead-based paint previously existed on exterior components, but has been removed, enclosed, or encapsulated.

c. A certified lead inspector/risk assessor or a certified elevated blood lead (EBL) inspector/risk assessor shall prepare a written report for each residential dwelling or child-occupied facility where paint testing is conducted. No later than three weeks after the receipt of laboratory results, the certified lead inspector/risk assessor or certified elevated blood lead (EBL) inspector/risk assessor shall send a copy of the report to the property owner and to the person requesting the inspection, if different. A certified lead inspector/risk assessor or a certified elevated blood lead (EBL) inspector/risk assessor shall maintain a copy of each written report for no less than three years. The report shall include, at least:

(1) A statement that the inspection was conducted to determine whether lead-based paint is present on deteriorated paint surfaces and on painted surfaces that will be disturbed or replaced;

(2) Date of the testing;

(3) Address of building;

(4) Date of construction;

(5) Apartment numbers (if applicable);

(6) The name, address, and telephone number of the owner or owners of each residential dwelling or child-occupied facility;

(7) Name, signature, and certification number of each certified lead inspector/risk assessor or certified elevated blood lead (EBL) inspector/risk assessor conducting the paint testing;

(8) Name and certification number of the certified firm(s) conducting the paint testing;

(9) Name, address, and telephone number of each laboratory conducting an analysis of collected samples;

(10) Each testing method and sampling procedure employed for paint analysis, including quality control data and, if used, the manufacturer, serial number, software, and operating mode of any X-ray fluorescence (XRF) analyzer;

(11) XRF readings taken for calibration and calculations to demonstrate that the XRF is properly calibrated;

(12) Specific locations by room of each painted component tested for the presence of lead-based paint and the results for each component expressed in terms appropriate to the sampling method used;

(13) A statement that all painted or finished components that were not tested must be assumed to contain lead-based paint;

(14) A description of the location, type, and severity of identified lead-based paint hazards, including the classification of each tested surface as to whether it is a lead-based paint hazard, and any other potential lead hazards, including bare soil in the dripline of a home where lead-based paint is identified on exterior components or lead-based paint previously existed on exterior components, but has been removed, enclosed, or encapsulated;

(15) A description of interim controls and lead abatement options for each identified lead-based paint hazard and a suggested prioritization for addressing each hazard. If the use of an encapsulant or enclosure is recommended, the report shall recommend a maintenance and monitoring schedule for the encapsulant or enclosure;

(16) Information regarding the owner's obligations to disclose known lead-based paint and lead-based paint hazards upon sale or lease of residential property as required by Subpart H of 24 CFR Part 35 and Subpart I of 40 CFR Part 745;

(17) Information regarding Iowa's prerenovation notification requirements found in 641—Chapter 69; and information regarding Iowa's regulations for renovation found in 641—Chapter 70; and

(18) The report shall contain the following statement:

"The location and nature of this inspection are required to be reported to the Iowa Department of Public Health for tracking purposes. The Iowa Department of Public Health may review this report for compliance purposes. It is a violation of law for anyone other than the certified lead professional signing it to alter this report. This report may be supplemented with additional information, so long as any addendum is signed by a lead inspector/risk assessor or elevated blood lead (EBL) inspector/risk assessor certified according to Iowa Administrative Code 641—70.3(135) and 70.5(135)."

70.6(10) A certified lead inspector/risk assessor or a certified elevated blood lead (EBL) inspector/risk assessor must conduct reevaluations according to the following standards. Reevaluations shall be conducted only by a certified lead inspector/risk assessor or a certified elevated blood lead (EBL) inspector/risk assessor.

a. All available information regarding lead-based paint for the property being reevaluated shall be reviewed, including but not limited to reports of any lead-based paint activities conducted in a residential dwelling, multifamily dwelling, or child-occupied facility.

b. A visual inspection of the property shall be undertaken to locate the existence of deteriorated paint; bare soil; recommended lead abatement, interim controls, or standard treatments that were not implemented; and failed interim controls, standard treatments, encapsulation, or enclosure.

c. Deteriorated paint for which the lead content is unknown shall be tested for the presence of lead.

d. Soil samples shall be collected and analyzed from bare soil for which the lead content is unknown. Soil samples shall be collected using the documented methodologies specified in guidance documents issued by the department and shall be analyzed by a recognized laboratory to determine the level of lead.

e. If any lead-based paint hazards, recommended lead abatement, interim controls, or standard treatments that were not implemented, or failed interim controls, standard treatments, encapsulation, or enclosure is identified, then the reevaluation is failed. These conditions shall be controlled through lead abatement or interim controls before the reevaluation can continue. Clearance testing shall be conducted following control of the conditions through lead abatement or interim controls.

f. If there are no lead-based paint hazards present and all of the recommended lead abatement or interim controls were implemented and have not failed, then single-surface or composite dust samples shall be collected. The reevaluation is passed if all of the dust samples taken are below the clearance level.

g. In residential dwellings, single-surface or composite dust samples shall be collected from floors and interior windowsills in at least four rooms, hallways, or stairwells where at least one child under the age of six years is most likely to come in contact with dust.

h. In multifamily dwellings, single-surface or composite dust samples shall also be collected from common areas where at least one child under the age of six years is likely to come in contact with dust.

i. In child-occupied facilities, single-surface or composite dust samples shall be collected from the floor and interior windowsill in at least four rooms, hallways, or stairwells utilized by one or more children under the age of six years and in other common areas where the certified lead inspector/risk assessor or certified elevated blood lead (EBL) inspector/risk assessor determines that at least one child under the age of six years is likely to come in contact with dust.

j. Dust samples shall be collected by wipe samples using the documented methodologies specified in guidance documents issued by the department. The minimum area for a floor wipe sample shall be 0.50 square feet or 72 square inches. The minimum area for a windowsill wipe sample and for a window trough wipe sample shall be 0.25 square feet or 36 square inches. Dust samples shall be analyzed by a recognized laboratory to determine the level of lead.

k. Paint shall be tested using adequate quality control by X-ray fluorescence or by laboratory analysis using a recognized laboratory to determine the presence of lead-based paint on a surface. If tested by laboratory analysis, the paint shall be sampled using the documented methodologies specified in guidance documents issued by the department. If testing by X-ray fluorescence, the certified lead inspector/risk assessor or elevated blood lead (EBL) inspector/risk assessor shall use the following methodologies:

(1) The certified lead inspector/risk assessor or elevated blood lead (EBL) inspector/risk assessor shall use an X-ray fluorescence analyzer that has a performance characteristics sheet and shall use the X-ray fluorescence analyzer according to the performance characteristics sheet.

(2) The certified lead inspector/risk assessor or elevated blood lead (EBL) inspector/risk assessor shall use the NIST 1.02 standard film or standards provided by the manufacturer for calibration of the X-ray fluorescence analyzer. The certified lead inspector/risk assessor or elevated blood lead (EBL) inspector/risk assessor shall not state that any surface is free of lead-based paint unless the NIST 1.02 standard film is used for calibration.

(3) The certified lead inspector/risk assessor or elevated blood lead (EBL) inspector/risk assessor shall take calibration readings consisting of an average of three readings.

(4) If recommended by the performance characteristics sheet, the certified lead inspector/risk assessor or elevated blood lead (EBL) inspector/risk assessor shall conduct substrate correction for all XRF readings less than 4.0 milligrams of lead per square centimeter. For each substrate that requires substrate correction, the certified lead inspector/risk assessor or elevated blood lead (EBL) inspector/risk assessor shall completely remove all paint from an area of two different testing combinations for that substrate. If possible, the areas chosen for substrate correction should have initial XRF readings of less than 2.5 milligrams of lead per square centimeter. For each testing combination, the certified lead inspector/risk assessor or elevated blood lead (EBL) inspector/risk assessor shall remove paint from an area that is at least as large as the XRF probe faceplate. On each of the two areas, the certified lead inspector/risk assessor or elevated blood lead (EBL) inspector/risk assessor shall place the NIST 1.02 standard film over the surface, and take three XRF readings with the XRF used to conduct the inspection. The certified lead inspector/risk assessor or elevated blood lead (EBL) inspector/risk assessor shall calculate the arithmetic mean for these six readings and shall subtract 1.02 from this arithmetic mean to obtain the substrate correction value. The certified lead inspector/risk assessor or elevated blood lead (EBL) inspector/risk assessor shall then subtract the substrate correction value from each XRF reading for the substrate requiring substrate correction to obtain the corrected XRF reading. For example, if the six readings taken on the NIST 1.02 standard film were 1.1, 1.3, 1.4, 1.0, 1.2, and 1.1, the arithmetic mean is calculated by the equation (1.1 + 1.3 + 1.4 + 1.0 + 1.2 + 1.1)/6 and is equal to 1.18. The substrate correction value is equal to 1.18 minus 1.02, or 0.16. If the certified lead inspector/risk assessor or elevated blood lead (EBL) inspector/risk assessor does not conduct substrate correction where recommended by the performance characteristics sheet, then the certified lead inspector/risk assessor or elevated blood lead (EBL) inspector/risk assessor shall assume that all of the readings are positive and shall not state that a surface is free of lead-based paint.

(5) The certified lead inspector/risk assessor or elevated blood lead (EBL) inspector/risk assessor shall classify each XRF reading that did not require substrate correction and each corrected XRF reading for XRF readings that required substrate correction as positive, negative, or inconclusive, according to

the performance characteristics sheet for the XRF. The certified lead inspector/risk assessor or elevated blood lead (EBL) inspector/risk assessor shall not discard XRF readings unless instructed to do so by the performance characteristics sheet or the operating instructions from the manufacturer. If the certified lead inspector/risk assessor or elevated blood lead (EBL) inspector/risk assessor believes that a reading classified as positive is in error, the certified lead inspector/risk assessor or elevated blood lead (EBL) inspector/risk assessor shall collect a paint sample for laboratory analysis. The certified lead inspector/risk assessor or elevated blood lead (EBL) inspector/risk assessor shall change the positive classification to negative only if the results of the laboratory analysis indicate that the surface is not painted with lead-based paint. The certified lead inspector/risk assessor or elevated blood lead (EBL) inspector/risk assessor may assume that all inconclusive readings are positive and classify them as such.

(6) The certified lead inspector/risk assessor or elevated blood lead (EBL) inspector/risk assessor shall resolve inconclusive readings as defined by the performance characteristics sheet for the XRF by collecting paint samples for laboratory analysis. If the certified lead inspector/risk assessor or elevated blood lead (EBL) inspector/risk assessor does not resolve inconclusive readings by laboratory analysis, then the certified lead inspector/risk assessor or elevated blood lead (EBL) inspector/risk assessor shall assume that the inconclusive readings are positive.

l. When conducting reevaluation in multifamily housing, a certified lead inspector/risk assessor or certified elevated blood lead (EBL) inspector/risk assessor may sample each residential dwelling or choose residential dwellings for sampling by random selection, targeted selection, or worst case selection.

(1) If built before 1960 or if the date of construction is unknown, the multifamily housing shall contain at least 20 similarly constructed and maintained residential dwellings in order to use random selection. If built from 1960 to 1977, the multifamily housing shall contain at least 10 similarly constructed and maintained residential dwellings in order to use random selection. The certified lead inspector/risk assessor or elevated blood lead (EBL) inspector/risk assessor shall use Table 1 to determine the number of residential dwellings to randomly select for testing.

(2) If the multifamily housing contains 5 or more similar residential dwellings, the certified lead inspector/risk assessor or elevated blood lead (EBL) inspector/risk assessor may use targeted selection. If using targeted selection, the certified lead inspector/risk assessor or elevated blood lead (EBL) inspector/risk assessor shall use Table 2 to determine the number of residential dwellings to test. If the multifamily housing has fewer than 5 similar dwellings, all residential dwellings shall be tested. Residential dwellings chosen by targeted selection shall meet as many of the following criteria as possible. If additional residential dwellings are needed to meet the minimum number specified in Table 2, the certified lead inspector/risk assessor or elevated blood lead (EBL) inspector/risk assessor shall select them randomly. If too many residential dwellings meet the criteria, residential dwellings shall be eliminated randomly. Targeted selection criteria are as follows:

1. The residential dwelling has been cited with a housing or building code violation within the past year.

2. The property owner believes that the residential dwelling is in poor condition.

3. The residential dwelling contains two or more children between the ages of six months and six years. The certified lead inspector/risk assessor or elevated blood lead (EBL) inspector/risk assessor shall give preference to residential dwellings that house the largest number of children.

4. The residential dwelling serves as a child-occupied facility.

5. The residential dwelling has been prepared for reoccupancy within the past three months.

(3) If the multifamily housing contains 5 or more similar residential dwellings, the certified lead inspector/risk assessor or elevated blood lead (EBL) inspector/risk assessor may use worst case selection. If using worst case selection, the certified lead inspector/risk assessor or elevated blood lead (EBL) inspector/risk assessor shall use Table 2 to determine the number of residential dwellings to test. If the multifamily housing has fewer than 5 similar dwellings, all residential dwellings shall be tested.

(4) The following standards shall be used to determine the extent of lead-based paint hazards throughout multifamily housing that is sampled by random selection, targeted selection, or worst case selection:

1. The certified lead inspector/risk assessor or elevated blood lead (EBL) inspector/risk assessor shall calculate the arithmetic mean of the dust-lead levels for carpeted floors, uncarpeted floors, interior windowsills, and window troughs. If the arithmetic mean is greater than or equal to the level defined as a dust-lead hazard for the component, then the certified lead inspector/risk assessor or elevated blood lead (EBL) inspector/risk assessor shall determine that a dust-lead hazard has been identified on the component throughout the multifamily housing. If the arithmetic mean is less than the level defined as a dust-lead hazard for the component, but some of the individual components have dust-lead levels that are greater than or equal to the level defined as a dust-lead hazard, then the certified lead inspector/risk assessor or elevated blood lead (EBL) inspector/risk assessor shall determine that a dust-lead hazard has been identified on the individual components and on all other similar components throughout the multifamily housing.

2. The certified lead inspector/risk assessor or elevated blood lead (EBL) inspector/risk assessor shall evaluate the results of paint sampling by component and location. If all components at a given location are determined to be painted with lead-based paint or are determined not to be painted with lead-based paint, the certified lead inspector/risk assessor or elevated blood lead (EBL) inspector/risk assessor may assume this condition is true for all similar residential dwellings. The certified lead inspector/risk assessor or elevated blood lead (EBL) inspector/risk assessor shall not assume that the multifamily housing is free of lead-based paint. If a component at a given location is found to be painted with lead-based paint in some residential dwellings and not painted with lead-based paint in other residential dwellings, the certified lead inspector/risk assessor or elevated blood lead (EBL) inspector/risk assessor shall assume that the component is a lead-based paint hazard in all similar residential dwellings.

m. If reevaluation is conducted, the first reevaluation shall be conducted no later than two years from completion of lead abatement, interim controls, or standard treatments. Subsequent reevaluation shall be conducted at intervals of two years, plus or minus 60 days. To be exempt from additional reevaluation, a residential dwelling or child-occupied facility shall have at least two consecutive passing reevaluations conducted at such two-year intervals. If, however, a reevaluation fails, at least two more consecutive reevaluations conducted at such two-year intervals must be conducted.

n. A certified lead inspector/risk assessor or certified elevated blood lead (EBL) inspector/risk assessor shall prepare a written report for each residential dwelling or child-occupied facility where a reevaluation is conducted. No later than three weeks after the receipt of laboratory results, the certified lead inspector/risk assessor or certified elevated blood lead (EBL) inspector/risk assessor shall send a copy of the report to the property owner and to the person requesting the reevaluation, if different. A certified lead inspector/risk assessor or certified elevated blood lead (EBL) inspector/risk assessor shall maintain a copy of the report for no less than three years. The report shall include, at least:

(1) Date of each reevaluation;

(2) Address of building;

(3) Date of construction;

(4) Apartment numbers (if applicable);

(5) The name, address, and telephone number of the owner or owners of each residential dwelling or child-occupied facility;

(6) Name, signature, and certification number of each certified lead inspector/risk assessor or certified elevated blood lead (EBL) inspector/risk assessor conducting the reevaluation;

(7) Name and certification number of the certified firm(s) conducting the reevaluation;

(8) All of the information gathered for the review as outlined in 70.6(10)*"a"*;

(9) Results of the visual inspection including details of any newly identified lead-based paint hazards, the status of past lead hazard control measures, and repair options for any lead-based paint hazards identified during the reevaluation;

(10) An indication of whether or not the property passed or failed the reevaluation;

(11) An indication of when the next reevaluation, if any, should occur;

(12) The results of any environmental samples taken, including all XRF readings, all laboratory analyses and clearance testing results, if necessary;

(13) Name, address, and telephone number of each recognized laboratory conducting an analysis of collected samples, including the identification number for each such laboratory recognized by EPA under Section 405(b) of the Toxic Substances Control Act (15 U.S.C. 2685(b));

(14) Information regarding the owner's obligations to disclose known lead-based paint and lead-based paint hazards upon sale or lease of residential property as required by Subpart H of 24 CFR Part 35 and Subpart I of 40 CFR Part 745;

(15) Information regarding Iowa's prerenovation notification requirements found in 641—Chapter 69; and information regarding Iowa's regulations for renovation found in 641—Chapter 70; and

(16) The report shall contain the following statement:

"The location and nature of this inspection are required to be reported to the Iowa Department of Public Health for tracking purposes. The Iowa Department of Public Health may review this report for compliance purposes. It is a violation of law for anyone other than the certified lead professional signing it to alter this report. This report may be supplemented with additional information, so long as any addendum is signed by a sampling technician, lead inspector/risk assessor or elevated blood lead (EBL) inspector/risk assessor certified according to Iowa Administrative Code 641—70.3(135) and 70.5(135)."

70.6(11) All renovations performed in target housing and child-occupied facilities, except for emergency renovations and minor repair and maintenance activities, shall be performed according to the work practice standards in 70.6(11). Renovation activities conducted in housing or on surfaces determined to be free of lead-based paint by a certified lead inspector/risk assessor or certified elevated blood lead (EBL) inspector/risk assessor shall be exempt from all work practice standards except record keeping. All renovations shall be performed by a certified firm under the supervision of a certified lead abatement contractor or a certified lead abatement worker who completes initial certification on or after January 13, 2010, or if certified prior to January 13, 2010, completes a lead abatement worker, lead abatement contractor, or lead-safe renovator refresher course on or after January 13, 2010, or shall be performed by a certified lead-safe renovator in accordance with the requirements below.

a. A firm shall assign at least one certified lead abatement contractor, a certified lead abatement worker, or a certified lead-safe renovator to each individual renovation project. The certified lead abatement contractor, certified lead abatement worker, or certified lead-safe renovator assigned to each individual renovation project shall ensure the following:

(1) A certified lead abatement contractor, a certified lead abatement worker, or a certified lead-safe renovator must be on site during all worksite preparation and during the cleanup of work areas. At all other times when renovation is being conducted, a certified lead abatement contractor, a certified lead abatement worker, or a certified lead-safe renovator shall be on site or available by telephone, pager, or answering service and be able to be present at the worksite in no more than two hours.

(2) Signs are posted and readable. All signs must be posted before the renovation begins and must remain in place until the postrenovation cleaning verification has been completed.

1. To the extent practicable, all signage must be posted in the occupants' primary language.

2. The signs must clearly define the work area.

3. The signs must warn occupants and other persons not involved with the renovation activity to remain outside the work area.

4. The signs must be posted at the entrance(s) to all work areas.

(3) The work area must be effectively contained before the renovation is begun. To be effective, containment must:

1. Isolate the work area so that no dust or debris leaves the work area while the renovation is being performed.

2. Be monitored and maintained so that any plastic or other impermeable materials are not torn or displaced.

3. Be installed in such a manner that it does not interfere with occupant and worker egress in an emergency.

(4) For interior renovations, containment shall include:

1. The removal or covering of all objects from the work area, including but not limited to furniture, rugs, and window coverings. Objects that are not removed from the work area must be covered with plastic sheeting or other impermeable material with all seams and edges taped or otherwise sealed.

2. Closing and covering all duct openings in the work area. Ducts must be covered with plastic sheeting or other impermeable material that is taped down.

3. Closing windows and doors in the work area. Doors must be covered with plastic sheeting or other impermeable material. Doors used as an entrance to the work area must be covered with plastic sheeting or other impermeable material in a manner that allows workers to pass through while confining dust and debris to the work area.

4. Covering the floor surface, including installed carpet, with taped-down plastic sheeting or other impermeable material in the work area six feet beyond the perimeter of the surfaces undergoing renovation or a sufficient distance to contain the dust, whichever is greater.

5. Ensuring that all personnel, tools, and other items, including the exteriors of containers of waste, are free of dust and debris before leaving or being removed from the work area.

(5) For exterior renovations, containment shall include:

1. Closing all doors and windows within 20 feet of the renovation. On multistory buildings, all doors and windows within 20 feet of the renovation on the same story as the renovation shall be closed, and all doors and windows on all stories below the renovation that are the same horizontal distance from the renovation shall be closed.

2. Ensuring that doors within the work areas that will be used while the renovation is being performed are covered with plastic sheeting or other impermeable material in a manner that allows workers to pass through while confining dust and debris to the work area.

3. Covering the ground with plastic sheeting or other disposable impermeable material extending 10 feet beyond the perimeter of surfaces undergoing renovation or a sufficient distance to collect falling paint debris, whichever is greater, unless the property line prevents 10 feet of such ground cover. Exterior ground cover shall include anchors or weights to ensure the covering remains effective even during weather conditions such as high wind.

4. Vertical containment. In certain situations, such as where other buildings are in close proximity to the work area, when conditions are windy, or where the work area abuts a property line, the certified lead abatement contractor, certified lead abatement worker, or certified lead-safe renovator shall erect a system of vertical containment designed to prevent dust and debris from migrating to adjacent property or contaminating the ground, other buildings, or any object beyond the work area.

(6) Prohibited practices are not used during the renovation. Prohibited practices include:

1. Open-flame burning or torching of paint.

2. Machine sanding or grinding or abrasive blasting or sandblasting of paint unless used with high-efficiency particulate air (HEPA) exhaust control that removes particles of 0.3 microns or larger from the air at 99.97 percent or greater efficiency.

3. Uncontained water blasting of paint.

4. Dry scraping or dry sanding of paint except in conjunction with the use of a heat gun or around electrical outlets.

5. Operating a heat gun at a temperature at or above 1100 degrees Fahrenheit.

(7) All workers that are not certified lead abatement contractors, certified lead abatement workers, or certified lead-safe renovators must have on-the-job training as required by 70.6(11)*"d."* However, on-the-job training does not meet the training requirement for work conducted pursuant to 24 CFR 35.1340.

(8) If desired, perform all testing with recognized test kits in accordance with 70.6(11)*"e."*

(9) Perform the postrenovation cleaning verification as outlined in 70.6(11)*"b."*

(10) All waste generated during renovation activities is contained to prevent the release of dust and debris before the waste is removed from the work area for storage or disposal. Any chutes used to remove waste from the work area shall be covered.

1. At the conclusion of each workday and at the conclusion of the renovation, waste that has been collected from renovation activities must be stored under containment, in an enclosure, or behind

a barrier that prevents release of dust and debris out of the work area and prevents access to dust and debris.

2. All waste from renovation activities must be contained during transportation so that no dust or debris is released.

(11) The work area shall be cleaned so that no dust, debris, or residue remains after the renovation. Cleaning shall include:

1. The collection of all paint chips and debris and, without dispersing the paint chips and debris, the sealing of the materials in heavy-duty bags.

2. The removal of the protective sheeting used as required in this subrule. The sheeting shall be misted, then the sheeting shall be folded dirty side inward. All sheeting shall be taped shut or otherwise sealed inside heavy-duty bags. Sheeting used to separate work areas from non-work areas must remain in place until after the cleaning and removal of other sheeting. All sheeting shall be disposed of as waste.

3. For interior renovations, all objects and surfaces in the work area and within two feet of the work area must be cleaned from high to low in the following manner:

- Walls must either be vacuumed with a HEPA vacuum or wiped with a wet cloth, beginning at the ceiling and working toward the floor.
- All remaining surfaces including objects and fixtures must be thoroughly vacuumed with a HEPA vacuum. For carpeted floors and rugs, the HEPA vacuum must be equipped with a beater bar.
- All remaining surfaces, except for carpeted or upholstered surfaces, must also be wiped with a damp cloth. Uncarpeted floors must be thoroughly mopped using a method that keeps the wash water separate from the rinse water, such as the two-bucket mopping method, or using a wet mopping system.

b. Postrenovation cleaning verification. A certified lead abatement contractor, certified lead abatement worker, or certified lead-safe renovator shall use the following procedure for conducting postrenovation cleaning verification. In lieu of postrenovation cleaning verification, clearance testing as outlined in 70.6(8) can be performed. If the work is done in response to an elevated blood lead (EBL) inspection, clearance testing shall be performed by a certified elevated blood lead (EBL) inspector/risk assessor in lieu of postrenovation cleaning verification. Warning signs may be removed after all of the work areas in a renovation project have been adequately cleaned and verified or passed clearance testing.

(1) For interior renovations, the certified lead abatement contractor, certified lead abatement worker, or certified lead-safe renovator shall perform a visual inspection to determine whether dust, debris, or residue is still present. If dust, debris, or residue is still present, these conditions must be removed by recleaning, and another visual inspection must be performed. Following a successful visual inspection, a certified lead abatement contractor, certified lead abatement worker, or certified lead-safe renovator must:

1. Verify that each windowsill and window trough in the work area has been adequately cleaned, using the following procedure:

- Wipe the windowsill and window trough with a wet disposable cleaning cloth that is damp to the touch. If the cloth matches or is lighter than the cleaning verification card, the windowsill has been adequately cleaned.
- If the cloth does not match and is darker than the cleaning verification card, reclean the windowsill or window trough as directed in 70.6(11)*"a"*(11). Then wipe the windowsill or window trough again, using a new cloth or the same cloth folded in such a way that an unused surface is exposed. If the cloth matches or is lighter than the cleaning verification card, that windowsill has been adequately cleaned.
- If the cloth does not match and is darker than the cleaning verification card, wait for one hour or until the surface has dried completely, whichever is longer.
- After waiting for the windowsill or window trough to dry, wipe the windowsill or window trough with a dry disposable cleaning cloth. After this wipe, that windowsill or window trough has been adequately cleaned.

2. Verify that uncarpeted floors and countertops in the work area have been adequately cleaned, using the following procedure. If the surface within the work area is greater than 40 square feet, the

surface within the work area must be divided into roughly equal sections that are each less than 40 square feet.

- Wipe uncarpeted floors and countertops within the work area with a wet disposable cleaning cloth. Floors must be wiped using an application device with a long handle and a head to which the cloth is attached. The cloth must remain damp at all times while it is being used to wipe the surface for postrenovation cleaning verification. Wipe each such section separately with a new wet disposable cleaning cloth. If the cloth used to wipe each section of the surface within the work area matches or is lighter than the cleaning verification card, the surface has been adequately cleaned.
- If the cloth does not match and is darker than the cleaning verification card, reclean the surface as in 70.6(11)*"a"*(11). Then wipe the floor or countertop again, using a new cloth. If the cloth matches or is lighter than the cleaning verification card, that surface has been adequately cleaned.
- If the cloth does not match and is darker than the cleaning verification card, wait for one hour or until the surface has dried completely, whichever is longer.
- After waiting for the surface to dry, wipe each section of the surface that has not yet achieved the postrenovation cleaning verification with a dry disposable cleaning cloth. After this wipe, that surface has been adequately cleaned.

(2) For exterior renovations, the certified lead abatement contractor, certified lead abatement worker, or certified lead-safe renovator shall perform a visual inspection to determine whether dust, debris, or residue is still present on surfaces in and below the work area, including windowsills and the ground. If dust, debris, or residue is present, these conditions must be eliminated and another visual inspection must be performed. When the area passes the visual inspection, the exterior has been adequately cleaned.

(3) A certified lead abatement contractor, certified lead abatement worker, or certified lead-safe renovator shall only use cleaning verification cards that are approved by the U.S. Environmental Protection Agency (EPA).

(4) A certified lead abatement contractor, certified lead abatement worker, or certified lead-safe renovator shall not use cleaning verification cards that have expired.

c. Clearance testing. Postrenovation cleaning verification is not required if the contract between the renovation firm and the person contracting for the renovation or another federal, state, territorial, tribal, or local law or regulation requires the renovation firm to perform clearance testing at the conclusion of a renovation covered by this chapter.

(1) The dust samples must be collected by a certified lead inspector/risk assessor, certified elevated blood lead (EBL) inspector/risk assessor, or certified sampling technician. If the work is done in response to an elevated blood lead (EBL) inspection, the dust samples must be collected by a certified elevated blood lead (EBL) inspector/risk assessor.

(2) The firm conducting the renovation is required to reclean the work area until the dust clearance sample results are below the clearance standards in subrule 70.6(8).

d. On-the-job training. The certified lead abatement contractor, certified lead abatement worker, or certified lead-safe renovator assigned to the renovation project shall ensure that each noncertified individual conducting renovation activities has been or is currently being trained on how to safely conduct renovation activities. However, on-the-job training does not meet the training requirement for work conducted pursuant to 24 CFR Part 35.

(1) All on-the-job training shall be conducted by a certified lead abatement contractor, certified lead abatement worker, or certified lead-safe renovator.

(2) Each noncertified individual shall be trained by a certified lead abatement contractor, certified lead abatement worker, or certified lead-safe renovator who is employed by the same certified firm. A certified firm shall not accept on-the-job training that was performed by another firm. On-the-job training does not meet the requirement for work conducted pursuant to 24 CFR Part 35.

(3) On-the-job training shall be specific for the type of work the noncertified individual is performing and must include at least the following topics:

1. An overview of the requirements described in this chapter.
2. An overview of the health effects of lead poisoning.

3. Methods to prevent taking lead dust home from the worksite.
4. How and why to properly set up a work area for lead-safe renovations.
5. How and where to properly post signage.
6. Personal protection.
7. How and why to properly set up containment.
8. How and why to minimize dust and debris.
9. Proper cleaning techniques and time lines for cleaning in renovation activities.
10. How to properly handle and control waste generated from renovation activities.
11. An overview of the postrenovation cleaning verification and clearance testing.
12. An overview of the prerenovation notification requirements found in 641—Chapter 69.
13. Prohibited work practices.

e. Recognized test kits. A certified lead abatement contractor, certified lead abatement worker, or certified lead-safe renovator may use recognized test kits to determine whether surfaces to be affected by renovation activities are painted with lead-based paint. The result from each individual test performed applies only to the individual surface tested. Surfaces which are determined by proper use of a recognized test kit to be free of lead-based paint are exempt from the requirements of 70.6(11)*"a"* through *"d."* Results obtained from recognized test kits are only valid if the testing was performed according to the manufacturer's directions. Any results from test kits which are not recognized shall be invalid. A certified lead abatement contractor, certified lead abatement worker, or certified lead-safe renovator shall not discard a valid result from a recognized test kit.

f. A certified lead abatement contractor, certified lead abatement worker, or certified lead-safe renovator must complete a written report when conducting a renovation. The report shall include the results of any testing performed with a recognized test kit, information regarding the work practices used in the renovation and, if applicable, a copy of the clearance testing report. When the final invoice for the renovation is delivered or within 30 days after the renovation activity is complete, whichever is earlier, the certified lead abatement contractor, certified lead abatement worker, or certified lead-safe renovator shall send a copy of the report to the owner of the building. If the renovation took place within a residential dwelling, the certified lead abatement contractor, certified lead abatement worker, or certified lead-safe renovator shall send a copy of the report to an adult occupant of the residential dwelling and to the person requesting the renovation, if different from the owner. If the renovation took place within a child-occupied facility, the certified lead abatement contractor, certified lead abatement worker, or certified lead-safe renovator shall send a copy of the report to an adult representative of the child-occupied facility and to the person requesting the renovation, if different from the owner. If the renovation took place within common areas of multifamily target housing, the certified lead abatement contractor, certified lead abatement worker, or certified lead-safe renovator shall post in areas where it is likely to be seen by the occupants of all of the affected units the report required by this paragraph or instructions on how interested occupants can obtain a copy of this report at no charge. If the renovation took place within a child-occupied facility, the certified lead abatement contractor, certified lead abatement worker, or certified lead-safe renovator shall post in areas where it is likely to be seen by the parents or guardians of children frequenting the child-occupied facility the report required by this paragraph or instructions on how interested parents or guardians of children frequenting the child-occupied facility can obtain a copy of this report at no charge. A certified lead abatement contractor, certified lead abatement worker, or certified lead-safe renovator shall maintain a copy of the report for no less than three years. The report shall include, at least:

(1) The date(s) of the renovation.

(2) Address of the building, including apartment numbers, if applicable.

(3) The name, address, and telephone number of the owner(s) of the address(es) where the renovation took place.

(4) The name, address, signature, certification number, and telephone number of the certified lead abatement contractor, certified lead abatement worker, or certified lead-safe renovator who performed the renovation.

(5) The name and certification number of the certified firm performing the renovation.

(6) If testing was performed with a recognized test kit, the location of each test. The location shall be specific to the room and component.

(7) The results of testing. The results shall be classified as either positive for lead-based paint or negative for lead-based paint.

(8) The name and manufacturer of the recognized test kit(s) used, the expiration date, and the EPA approval number.

(9) The work practices used in the renovation, including the location(s) where each work practice was used. The location shall be specific to the room and component.

(10) If applicable, a copy of the clearance report.

(11) Information regarding the owner's obligations to disclose known lead-based paint and lead-based paint hazards upon sale or lease of residential property as required by Subpart H of 24 CFR Part 35 and Subpart I of 40 CFR Part 745.

(12) Information regarding Iowa's prerenovation notification requirements found in 641—Chapter 69; and information regarding Iowa's regulations for renovation, remodeling and repainting found in 641—Chapter 70.

g. Record keeping. Records shall be kept for each renovation project that involves target housing or child-occupied facilities. The records for each renovation shall include:

(1) The name and certification number of the certified lead abatement contractor, certified lead abatement worker, or certified lead-safe renovator responsible for the renovation.

(2) The name and certification number of the certified firm that performed the renovation.

(3) The address(es) of the property where the renovation activity was performed.

(4) The name, address, and telephone number of the property owner where the renovation activity was performed.

(5) Renovations considered emergency pursuant to 641—70.2(135) shall contain a description of the circumstances explaining why the renovations were immediately required and which work practice standards were not followed as a result.

(6) Any reports or documentation completed by a certified lead professional concerning the renovation project, including documentation from certified lead inspector/risk assessors or certified elevated blood lead (EBL) lead inspector/risk assessors regarding housing, components, or surfaces that have been determined to be free of lead-based paint and clearance reports from clearance testing performed in lieu of postrenovation cleaning verification.

(7) Documentation that each noncertified individual working on the renovation project had, or was receiving, the appropriate on-the-job training outlined in 70.6(11)*"d."* The documentation must include the names of all of the noncertified individuals who worked on the renovation. However, on-the-job training does not meet the training requirement for work conducted pursuant to 24 CFR 35.1340.

(8) Documentation that the certified lead-safe renovator followed the work practices for renovation activities outlined in 70.6(11). This shall include documentation that the following work practices were followed:

1. Signs were posted at the entrance to the work area.
2. The work area was contained.
3. All objects in the work area were covered or removed.
4. All HVAC ducts in the work area were closed and covered.
5. All windows in the work area were closed, and all windows within 20 feet of exterior work areas were closed.
6. All doors not used to enter the work area were closed and sealed, and all doors within 20 feet of exterior work areas were closed and sealed.
7. All doors used as an entrance to the work area had containment in place to prevent the spread of dust and debris.
8. All floors in the work area were covered for a sufficient distance to contain the dust and debris from the renovation.
9. Adequate ground cover was in place to contain the dust and debris for exterior renovations.

10. Adequate vertical containment was in place to contain the dust and debris for exterior renovations.

11. All waste generated during the renovations was contained throughout the renovation and the transportation to disposal.

(9) Documentation that the renovation work area was cleaned and passed the postrenovation cleaning verification procedures outlined in 70.6(11)*"b,"* including the expiration date of the cleaning verification cards used.

(10) Documentation regarding the use of any recognized test kits outlined in 70.6(11)*"e."* The documentation shall include a copy of the written report required by 70.6(11)*"f."*

h. Emergency renovations.

(1) Renovation activities that are deemed to be an emergency are exempt from the certification requirements and all of the work practice standards, except for the cleaning requirements, postrenovation cleaning verification, and the written report required by 70.6(11)*"f."* All postrenovation cleaning must take place under the direction of a certified lead abatement contractor, certified lead abatement worker, or certified lead-safe renovator. The postrenovation cleaning verification after an emergency renovation must be performed by a certified lead abatement contractor, certified lead abatement worker, or certified lead-safe renovator.

(2) Emergency renovations that are required as a result of an elevated blood lead (EBL) inspection are initially exempt from the certification requirements. The work practice standards found in 70.6(11)*"a"* shall apply. All individuals who perform emergency renovations in response to an elevated blood lead (EBL) inspection are required to obtain certification as a lead-safe renovator, lead abatement contractor, or lead abatement worker within six months from the date the elevated blood lead (EBL) inspection report was issued. Renovations and interim controls performed in response to an elevated blood lead (EBL) inspection are required to pass clearance testing that is performed by a certified elevated blood lead (EBL) inspector/risk assessor.

70.6(12) A certified elevated blood lead (EBL) inspection agency shall maintain for a period of at least 10 years the written records for all elevated blood lead (EBL) inspections conducted by persons that the agency employs or contracts with to provide elevated blood lead (EBL) inspections in the agency's service area.

70.6(13) A person may be certified as a lead inspector/risk assessor, sampling technician, or elevated blood lead (EBL) inspector/risk assessor and as a lead abatement contractor or lead abatement worker. Except as specified by paragraph 70.6(6)*"k"* and paragraph 70.6(8)*"f,"* a person who is certified both as a lead inspector/risk assessor, sampling technician, or elevated blood lead (EBL) inspector/risk assessor and as a lead abatement contractor or lead abatement worker shall not provide both lead inspection or visual risk assessment and lead abatement services at the same site unless a written consent or waiver, following full disclosure by the person, is obtained from the owner or manager of the site.

70.6(14) Any paint chip, dust, or soil samples collected pursuant to the work practice standards contained in subrules 70.6(1) to 70.6(6) and 70.6(9) shall be collected by persons certified as a lead inspector/risk assessor or an elevated blood lead (EBL) inspector/risk assessor. Any paint chip, dust, or soil samples collected pursuant to the work practice standards contained in subrule 70.6(8) for clearance testing following lead abatement shall be collected by persons certified as a lead inspector/risk assessor or an elevated blood lead (EBL) inspector/risk assessor. Any dust or soil samples collected pursuant to the work practice standards contained in subrule 70.6(8) for clearance testing after renovation or interim controls, paint stabilization, standard treatments, ongoing lead-based paint maintenance, and rehabilitation pursuant to 24 CFR Part 35 shall be collected only by certified sampling technicians, certified lead inspector/risk assessors, or certified elevated blood lead (EBL) inspector/risk assessors. Any paint chip, dust, or soil samples collected pursuant to the work practice standards contained in 641—70.6(135) shall be analyzed by a recognized laboratory.

70.6(15) Composite dust sampling shall be conducted only in the situations specified in subrules 70.6(4) to 70.6(6) and 70.6(8). If composite sampling is conducted, it shall meet the following requirements:

a. Composite dust samples shall consist of at least two subsamples.

b. Every component that is being tested shall be included in the sampling.

c. Composite dust samples shall not consist of subsamples from more than one type of component.

d. The results of composite dust samples shall be evaluated by comparing the residual lead level as determined by the laboratory analysis from each composite dust sample with applicable single-surface dust-lead hazard or clearance levels for lead in dust on floors, interior windowsills, and window troughs divided by half the number of subsamples in the composite sample. For example, the applicable clearance level for a composite window trough sample consisting of three subsamples would be 267 micrograms per square foot (400/1.5).

70.6(16) Reporting lead-based paint activities. A certified sampling technician, lead inspector risk/assessor, and elevated blood lead (EBL) inspector risk/assessor shall report to the department quarterly all lead-based paint activities that they perform. Lead-based paint activities include: lead-free inspections, lead inspections, risk assessments, lead hazard screens, visual risk assessments, and clearance testing.

a. Each certified sampling technician, lead inspector risk/assessor, and elevated blood lead (EBL) inspector/risk assessor shall provide the following information to the department electronically in a format specified by the department:

(1) Name and certification number of the certified sampling technician, lead inspector/risk assessor, or elevated blood lead (EBL) inspector/risk assessor who performed the lead-based paint activity.

(2) Name, address, telephone number, and certification number of the certified firm that performed the lead-based paint activity.

(3) Address where the activity took place. For each address, the report shall specify:

1. The type of activity.

2. Whether or not lead-based paint was identified, including paint assumed to be lead-based paint.

3. Whether or not lead-based paint hazards were identified, including assumed hazards.

4. Whether or not the address was free of lead-based paint pursuant to the requirements outlined in subrule 70.6(1).

b. Reports shall be due on January 15, April 15, July 15, and October 15 of each year.

[**ARC 8502B**, IAB 2/10/10, effective 1/13/10]

641—70.7(135) Firms. All firms that perform or offer to perform lead-based paint activities must be certified by the department. Firms shall employ only appropriately certified employees to conduct lead-based paint activities, and the firm and its employees shall follow the work practice standards in 641—70.6(135) for conducting lead-based paint activities. A firm must employ at least one certified individual in order to receive or maintain firm certification. Beginning April 22, 2010, firms that perform or offer to perform renovation must be certified by the department.

70.7(1) A firm wishing to be certified shall apply on forms supplied by the department. The firm must submit:

a. A completed application form.

b. Documentation that the firm will employ only appropriately certified lead professionals to perform lead-based paint activities. In addition, the firm must document that the agency and its employees or contractors will follow the work practice standards in 641—70.6(135) for conducting lead-based paint activities.

c. The certified firm must maintain all records required by 641—70.6(135), with the exception of elevated blood lead (EBL) inspection reports, for three years. Certified firms that are also certified as elevated blood lead (EBL) inspection agencies must maintain elevated blood lead (EBL) inspection reports for at least 10 years.

70.7(2) Firms must be recertified each year. To be recertified, the firm must submit the following:

a. A completed application form.

b. Documentation that the firm will employ only appropriately certified lead professionals to perform lead-based paint activities. In addition, the firm must document that the firm and its employees

or contractors will follow the work practice standards in 641—70.6(135) for conducting lead-based paint activities.
[**ARC 8502B**, IAB 2/10/10, effective 1/13/10]

641—70.8(135) Lead-safe work practices training program approval and lead-safe work practices contractor registration. Rescinded IAB 2/10/10, effective 1/13/10.

641—70.9(135) Compliance inspections.

70.9(1) The department may enter premises or facilities where violations of the provisions regarding lead-based paint activities may occur for the purpose of conducting compliance inspections.

70.9(2) The department may enter premises or facilities where training programs conduct business.

70.9(3) The department may take samples and review records as part of the lead-based paint activities compliance inspection process.

70.9(4) The department may review all reports involving lead-based paint activities.

70.9(5) The department may issue subpoenas pursuant to 641—Chapter 173, Iowa Administrative Code, for the purposes of determining compliance.
[**ARC 8502B**, IAB 2/10/10, effective 1/13/10]

641—70.10(135) Denial, suspension, or revocation of certification; denial, suspension, revocation, or modification of course approval; and imposition of penalties.

70.10(1) When the department finds that the applicant, certified lead professional, certified elevated blood lead (EBL) inspection agency, or certified firm has committed any of the following acts, the department may deny an application for certification, may suspend or revoke a certification, may prohibit specific work practices, may require a project conducted by persons or firms that are not certified or a project where prohibited work practices are being used to be halted, may require the cleanup of lead hazards created by the use of prohibited work practices, may impose a civil penalty, may place on probation, may require additional education, may require reexamination of the state certification examination, may issue a warning, may refer the case to the office of the county attorney for possible criminal penalties pursuant to Iowa Code section 135.38, or may impose other sanctions allowed by law as may be appropriate.

a. Failure or refusal to comply with any requirements of this chapter.

b. Failure or refusal to establish, maintain, provide, copy, or permit access to records or reports as required by rules 641—70.3(135) to 70.7(135).

c. Failure or refusal to permit entry or inspection as described in subrules 70.9(1) to 70.9(3).

d. Obtaining certification through fraudulent representation.

e. Failure to obtain certification from the department and performing work requiring certification.

f. Fraudulently obtaining certification and engaging in any lead-based paint activities requiring certification.

g. Conducting any part of a lead-based paint activity that requires certification without being certified or with a certification that has lapsed.

h. Obtained documentation of training through fraudulent means.

i. Gained admission to an accredited training program through misrepresentation of admission requirements.

j. Obtained certification through misrepresentation of certification requirements or related documents pertaining to education, training, professional registration, or experience.

k. Performed work requiring certification at a job site without having proof of current certification.

l. Permitted the duplication or use of the individual's or firm's own certificate by another.

m. Failed to follow the standards of conduct required by 641—70.6(135).

n. Failed to comply with federal, state, or local lead-based paint statutes and regulations, including the requirements of this chapter.

o. Performed work for which certification is required with employees or persons under the control of the certified elevated blood lead (EBL) inspection agency or certified firm who were not appropriately certified.

p. Knowingly made misleading, deceptive, untrue, or fraudulent representations in the practice of lead professional activities or engaged in unethical conduct or practice harmful or detrimental to the public. Proof of actual injury need not be established.

q. Used untruthful or improbable statements in advertisements. This includes, but is not limited to, an action by a lead professional making information or intention known to the public that is false, deceptive, misleading, or promoted through fraud or misrepresentation.

r. Falsified reports and records required by this chapter.

s. Accepted any fee by fraud or misrepresentation.

t. Negligence by the firm or individual in the practice of lead professional activities. This includes a failure to exercise due care, including negligent delegation of duties or supervision of employees or other individuals, whether or not injury results; or any conduct, practice, or conditions that impair the ability of the firm or individual to safely and skillfully practice the profession.

u. Revocation, suspension, or other disciplinary action taken by a certification or licensing authority of this state, another state, territory, or country; or failure by the firm or individual to report such action in writing within 30 days of the final action by such certification or licensing authority. A stay by an appellate court shall not negate this requirement; however, if such disciplinary action is overturned or reversed by a court of last resort, the report shall be expunged from the records of the board.

v. Failed to comply with the terms of a department order or the terms of a settlement agreement or consent order.

w. Representation by a firm or individual that the firm or individual is certified when the certification has been suspended or revoked or has not been renewed.

x. Failed to respond within 20 days of receipt of communication from the department that was sent by registered or certified mail.

y. Engaged in any conduct that subverts or attempts to subvert a department investigation.

z. Failed to comply with a subpoena issued by the department or failure to cooperate with a department investigation.

aa. Failed to pay costs assessed in any disciplinary action.

ab. Been convicted of a felony or misdemeanor related to lead professional activities or the conviction of any felony or misdemeanor that would affect the ability of the firm or individual to perform lead professional activities. A copy of the record of conviction or plea of guilty shall be conclusive evidence.

ac. Unethical conduct. This includes, but is not limited to, the following:

(1) Verbally or physically abusing a client or coworker.

(2) Improper sexual conduct with or making suggestive, lewd, lascivious, or improper remarks or advances to a client or coworker.

(3) Engaging in a professional conflict of interest.

(4) Mental or physical inability reasonably related to and adversely affecting the ability of the firm or individual to practice in a safe and competent manner.

(5) Being adjudged mentally incompetent by a court of competent jurisdiction.

(6) Habitual intoxication or addiction to drugs.

1. The inability of a lead professional to practice with reasonable skill and safety by reason of the excessive use of alcohol on a continuing basis.

2. The excessive use of drugs which may impair a lead professional's ability to practice with reasonable skill or safety.

3. Obtaining, possessing, attempting to obtain or possess, or administering controlled substances without lawful authority.

70.10(2) Reserved.

70.10(3) The department may deny, suspend, revoke, or modify the approval for a course, or may place on probation, or impose other sanctions allowed by law as may be appropriate, or may impose a civil penalty or may refer the case to the office of the county attorney for possible criminal penalties

pursuant to Iowa Code section 135.38 when it finds that the training program, training manager, or other person with supervisory authority over the course has committed any of the following acts:

a. Misrepresented the contents of a training course to the department or to the student population.

b. Failed to submit required information or notifications in a timely manner.

c. Failed to maintain required records.

d. Falsified approval records, instructor qualifications, or other information or documentation related to course approval.

e. Failed to comply with the training standards and requirements in 641—70.4(135).

f. Made false or misleading statements to the department in its application for approval or reapproval which the department relied upon in approving the application.

g. Failed to comply with federal, state, or local lead-based paint statutes and regulations, including the requirements of this chapter.

h. Knowingly made misleading, deceptive, untrue, or fraudulent representations in the practice of conducting a training program or engaged in unethical conduct or practice harmful or detrimental to the public. Proof of actual injury need not be established.

i. Used untruthful or improbable statements in advertisements. This includes, but is not limited to, an action by a training program making information or intention known to the public that is false, deceptive, misleading, or promoted through fraud or misrepresentation.

j. Falsified reports and records required by this chapter.

k. Accepted any fee by fraud or misrepresentation.

l. Revocation, suspension, or other disciplinary action taken by a certification or licensing authority of this state, another state, territory, or country; or failure by the firm or individual to report such action in writing within 30 days of the final action by such certification or licensing authority. A stay by an appellate court shall not negate this requirement; however, if such disciplinary action is overturned or reversed by a court of last resort, the report shall be expunged from the records of the board.

m. Failed to comply with the terms of a department order or the terms of a settlement agreement or consent order.

n. Failed to respond within 20 days of receipt of communication from the department that was sent by registered or certified mail.

o. Engaged in any conduct that subverts or attempts to subvert a department investigation.

p. Failed to comply with a subpoena issued by the department or failure to cooperate with a department investigation.

q. Failed to pay costs assessed in any disciplinary action.

70.10(4) Complaints and other requests for action under this rule. Complaints regarding a certified lead professional, a certified elevated blood lead (EBL) inspection agency, a certified firm, or an approved course shall be submitted in writing to the Iowa Department of Public Health, Lead Poisoning Prevention Program, 321 East 12th Street, Des Moines, Iowa 50319-0075. The complainant shall provide:

a. The name of the certified lead professional, certified elevated blood lead (EBL) inspection agency, or certified firm and the specific details of the action(s) by the certified lead professional, certified elevated blood lead (EBL) inspection agency, or certified firm that did not comply with the rules; or

b. The name of the lead professional or firm that conducted lead professional activities without the appropriate certification or approval as required by the rules; or

c. The name of the sponsoring person or organization of an approved course and the specific way(s) that an approved course did not comply with the rules; or

d. The name of the sponsoring person or organization that provided a course without the approval required by these rules.

70.10(5) Civil penalties.

a. Before instituting any proceeding to impose a civil penalty under Iowa Code section 135.105A, the department shall serve a written notice of violation upon the person charged. The notice of violation shall specify the date or dates, facts, and the nature of the alleged act or omission with which the person is charged and shall identify specifically the particular provision or provisions of the law, rule, regulation,

certification, approval, or cease and desist order involved in the alleged violation and must state the amount of each proposed penalty. The notice of violation shall also advise the person charged that the civil penalty may be paid in the amount specified therein, or the proposed imposition of the civil penalty may be protested in its entirety or in part, by a written answer, either denying the violation or showing extenuating circumstances. The notice of violation shall advise the person charged that upon failure to pay a civil penalty subsequently determined by the department, if any, unless compromised, remitted, or mitigated, the fee shall be collected by civil action, pursuant to Iowa Code section 135.105A.

b. Within 20 days of the date of a notice of violation or other time specified in the notice, the person charged may either pay the penalty in the amount proposed or answer the notice of violation. The answer to the notice of violation shall state any facts, explanations, and arguments denying the charges of violation, or demonstrating any extenuating circumstances, error in the notice of violation, or other reason why the penalty should not be imposed and may request remission or mitigation of the penalty.

c. If the person charged with violation fails to answer within the time specified in paragraph 70.10(5)*"b,"* an order may be issued imposing the civil penalty in the amount set forth in the notice of violation described in paragraph 70.10(5)*"a."*

d. If the person charged with violation files an answer to the notice of violation, the department, upon consideration of the answer, will issue an order dismissing the proceeding or imposing, mitigating, or remitting the civil penalty. The person charged may, within 20 days of the date of the order or other time specified in the order, request a hearing.

e. If the person charged with violation requests a hearing, the department will issue an order designating the time and place of hearing. The hearing shall be conducted according to the procedural rules of the department of inspections and appeals found in 481—Chapter 10, Iowa Administrative Code.

f. If a hearing is held, an order will be issued after the hearing by the presiding officer or the department dismissing the proceeding or imposing, mitigating, or remitting the civil penalty.

g. The department may compromise any civil penalty. If the civil penalty is not compromised, or is not remitted by the presiding officer or the department, and if payment is not made within ten days following either the service of the order described in paragraph 70.10(5)*"c"* or *"f,"* or the expiration of the time for requesting a hearing described in paragraph 70.10(5)*"d,"* the department may refer the matter to the attorney general for collection.

h. Except when payment is made after compromise or mitigation by the department of justice or as ordered by a court of the state, following reference of the matter to the attorney general for collection, payment of civil penalties imposed under Iowa Code section 135.105A shall be made by check, draft, or money order payable to the Iowa Department of Public Health.

70.10(6) Appeals.

a. Notice of denial, suspension or revocation of certification, or denial, suspension, revocation, or modification of course approval shall be sent to the affected individual or organization by restricted certified mail, return receipt requested, or by personal service. The affected individual or organization shall have a right to appeal the denial, suspension or revocation.

b. An appeal of a denial, suspension or revocation or other disciplinary action shall be submitted by certified mail, return receipt requested, within 20 days of the receipt of the department's notice to the Iowa Department of Public Health, Lead Poisoning Prevention Program, 321 East 12th Street, Des Moines, Iowa 50319-0075. If such a request is made within the 20-day time period, the notice of denial, suspension or revocation or other disciplinary action shall be deemed to be suspended. Prior to or at the hearing, the department may rescind the notice upon satisfaction that the reason for the denial, suspension or revocation or other disciplinary action has been or will be removed. After the hearing, or upon default of the applicant or alleged violator, the administrative law judge shall affirm, modify or set aside the denial, suspension or revocation or other disciplinary action. If no appeal is submitted within 20 days, the denial, suspension or revocation or other disciplinary action shall become the department's final agency action.

c. Upon receipt of an appeal that meets contested case status, the appeal shall be transmitted to the department of inspections and appeals within five working days of receipt pursuant to the rules adopted

by that agency regarding the transmission of contested cases. The information upon which the denial, suspension or revocation is based shall be provided to the department of inspections and appeals.

d. The hearing shall be conducted according to the procedural rules of the department of inspections and appeals found in 481—Chapter 10, Iowa Administrative Code.

e. When the administrative law judge makes a proposed decision and order, it shall be served by restricted certified mail, return receipt requested, or delivered by personal service. The proposed decision and order then becomes the department's final agency action without further proceedings ten days after it is received by the aggrieved party unless an appeal to the director is taken as provided in paragraph 70.10(6)*"f."*

f. Any appeal to the director for review of the proposed decision and order of the administrative law judge shall be filed in writing and mailed to the director by certified mail, return receipt requested, or delivered by personal service within ten days after the receipt of the administrative law judge's proposed decision and order by the aggrieved party. A copy of the appeal shall also be mailed to the administrative law judge. Any request for appeal shall state the reason for appeal.

g. Upon receipt of an appeal request, the administrative law judge shall prepare the record of the hearing or submission to the director. The record shall include the following:

(1) All pleadings, motions, and rulings.

(2) All evidence received or considered and all other submissions by recording or transcript.

(3) A statement of all matters officially noticed.

(4) All questions and offers of proof, objection, and rulings thereon.

(5) All proposed findings and exceptions.

(6) The proposed findings and order of the administrative law judge.

h. The decision and order of the director becomes the department's final agency action upon receipt by the aggrieved party and shall be delivered by restricted certified mail, return receipt requested, or by personal service.

i. It is not necessary to file an application for a rehearing to exhaust administrative remedies when appealing to the director or the district court as provided in Iowa Code section 17A.19. The aggrieved party to the final agency action of the department who has exhausted all administrative remedies may petition for judicial review of that action pursuant to Iowa Code chapter 17A.

j. Any petition for judicial review of a decision and order shall be filed in the district court within 20 days after the decision and order becomes final. A copy of the notice of appeal shall be sent to the department by certified mail, return receipt requested, or by personal service to the Iowa Department of Public Health, Lead Poisoning Prevention Program, 321 East 12th Street, Des Moines, Iowa 50319-0075.

k. The party who appeals a final agency action to the district court shall pay the cost of the preparation of a transcript of the contested case hearing for the district court.

70.10(7) Public notification.

a. The public shall be notified of the suspension, revocation, modification, or reinstatement of course approval through appropriate mechanisms.

b. The department shall maintain a list of courses for which the approval has been suspended, revoked, modified, or reinstated.

c. The public shall be notified of the suspension or revocation of the certification of a lead professional or firm.

d. The department shall maintain a list of lead professionals and firms for which certification has been suspended or revoked.

[**ARC 8502B**, IAB 2/10/10, effective 1/13/10]

641—70.11(135) Waivers. Rules in this chapter are not subject to waiver or variance pursuant to 641—Chapter 178 or any other provision of law.

These rules are intended to implement Iowa Code section 135.105A.

[Filed emergency 9/16/96—published 10/9/96, effective 9/16/96]

[Filed 1/9/97, Notice 10/9/96—published 1/29/97, effective 3/5/97]

[Filed emergency 5/16/97 after Notice 4/9/97—published 6/4/97, effective 5/16/97]

[Filed 1/23/98, Notice 10/22/97—published 2/11/98, effective 3/19/98]
[Filed 11/10/98, Notice 9/9/98—published 12/2/98, effective 1/6/99]
[Filed emergency 9/17/99—published 10/6/99, effective 9/17/99]
[Filed 11/12/99, Notice 10/6/99—published 12/1/99, effective 1/5/00][◊]
[Filed emergency 9/14/00 after Notice 8/9/00—published 10/4/00, effective 9/14/00]
[Filed 9/14/01, Notice 8/8/01—published 10/3/01, effective 11/7/01]
[Filed 3/12/04, Notice 2/4/04—published 3/31/04, effective 5/5/04]
[Filed Emergency After Notice ARC 8502B (Notice ARC 8357B, IAB 12/2/09), IAB 2/10/10, effective 1/13/10]
[Filed ARC 0482C (Notice ARC 0369C, IAB 10/3/12), IAB 12/12/12, effective 1/16/13]

◊ Two or more ARCs

CHAPTER 71
EMERGENCY INFORMATION SYSTEM ON PESTICIDES FOR USE BY HEALTH CARE PROVIDERS DURING MEDICAL EMERGENCIES

641—71.1(139A) Scope. Except as otherwise specifically provided, these rules apply to requirements for the operation of an emergency information system operated by providers of pesticides in Iowa who register with the Iowa department of agriculture and land stewardship (IDALS). These rules do not pertain to registrants who do not operate their own emergency information system.

641—71.2(139A) Definitions. As used in this chapter, these terms have the definition set forth below.

"Department" means the Iowa department of public health.

"Emergency information system (EIS)" means a system developed by a registrant that is accessible by Iowa health care providers and poison control centers 24 hours per day, every day of the year. The system must provide ready access to pesticide product profiles of the registrants to include but not be limited to characterization of inert ingredient(s) and their general proportion whether openly defined or confidentially maintained as a trade secret.

"Registrant" means the person registering any pesticide or device or who has obtained a certificate of license from IDALS pursuant to the provisions of Iowa Code chapter 206.

641—71.3(139A) Operation of EIS.

71.3(1) *Registrants operating their own EIS shall:*

a. Provide emergency treatment information to health care providers engaged in the emergency care of a real-time human exposure to a registrant's product(s) upon request 24 hours per day, every day of the year. These services shall identify required inert ingredients, pursuant to Iowa Code section 206.12(2)*"c"*(2), even if they are considered trade secret, for the sole purpose of assisting in the medical management of persons exposed to pesticides;

b. Ensure that information response time to provide appropriate pesticide ingredient information, which may be responsible for the medical emergency, to a health care provider or poison control center, as defined in Iowa Code section 206.2, does not exceed 15 minutes;

c. Have in operation a toll-free number (800 number, reverse charges number, etc.) which can be accessed anywhere in Iowa;

d. Have qualified responders on duty at all times. A qualified responder who provides the information to the inquiring health care provider shall:

(1) Have a college degree in one of the life sciences or its equivalent and have a minimum of two years' experience in the hazardous chemical (pesticide) field. This experience shall be in the routine handling and working with hazardous substances of the type that would, in the normal course of events, require emergency response; or

(2) Be an individual who is under the direct supervision of an individual who meets the requirements of 71.3(1)*"d"*(1); and

(3) Have comprehensive emergency response and accident mitigation training.

e. Have an adequate contingency plan to continue operation in the event of equipment or power failure;

f. Have facsimile (fax) capabilities;

g. Provide at a minimum:

(1) The immediate health hazards posed by internal or external exposure to a given pesticide,

(2) Risks of fire or explosion of a material,

(3) Immediate precautions to take in the event of an accident or incident,

(4) Preliminary first-aid measures, and

(5) A comprehensive list of compounds in a given product including identification of the inert ingredients only upon request from the health care provider who is treating a real-time human exposure to a registrant's product.

h. Provide to poison control centers, defined in Iowa Code subsection 206.2(24), the telephone number(s) to be used to obtain treatment information for a person exposed to a registrant's product.

71.3(2) Reserved.

These rules are intended to implement Iowa Code subsection 139A.21(7).

[Filed emergency 1/8/92—published 2/5/92, effective 1/8/92]
[Filed emergency 3/11/92—published 4/1/92, effective 3/13/92]
[Filed 6/1/92, Notice 4/15/92—published 6/24/92, effective 7/29/92]
[Filed Without Notice 9/21/06—published 10/11/06, effective 11/15/06]

CHAPTER 72
CHILDHOOD LEAD POISONING PREVENTION PROGRAM

641—72.1(135) Definitions.

"Approved program" means a program that meets the requirements of subrule 72.2(3) and has been approved by the department.

"Capillary" means a blood sample taken from the finger or heel for lead analysis.

"Certified elevated blood lead (EBL) inspection agency" means an agency that has met the requirements of 641—70.5(135) and has been certified by the department.

"Certified elevated blood lead (EBL) inspector/risk assessor" means a person who has met the requirements of 641—70.5(135) for certification or interim certification and who has been certified by the department.

"Chelation" means the administration of medication that binds lead so that it can be removed from the body.

"Department" means the Iowa department of public health.

"Elevated blood lead (EBL) child" means any child who has had one venous blood lead level greater than or equal to 20 micrograms per deciliter or at least two venous blood lead levels of 15 to 19 micrograms per deciliter.

"Elevated blood lead (EBL) inspection" means an inspection to determine the sources of lead exposure for an elevated blood lead (EBL) child and the provision within ten working days of a written report explaining the results of the investigation to the owner and occupant of the residential dwelling or child-occupied facility being inspected and to the parents of the elevated blood lead (EBL) child.

"Elevated blood lead (EBL) inspection agency" means an agency that employs or contracts with individuals who perform elevated blood lead (EBL) inspections. Elevated blood lead (EBL) inspection agencies may also employ or contract with individuals who perform other lead-based paint activities.

"Laboratory" means a laboratory satisfactorily participating in the blood lead analysis proficiency testing program of the Centers for Disease Control and Prevention/University of Wisconsin.

"Lead-based paint hazard" means hazardous lead-based paint, a dust-lead hazard, or a soil-lead hazard as defined in 641—Chapter 70.

"Local board" means a county, district, or city board of health.

"Local childhood lead poisoning prevention program" means a program in which the services listed in subrule 72.2(3) are provided by agencies located in a community.

"Venous" means a blood sample taken from a vein in the arm for lead analysis.

641—72.2(135) Approved programs.

72.2(1) An individual local board of health representing a geographic area with a population of at least 15,000 is eligible to apply for status as an approved program. A group of local boards of health representing a geographic area with a total population of at least 15,000 may apply for status as an approved program by designating an individual local board of health to apply on behalf of the group.

72.2(2) A local board wishing to apply for status as an approved program shall make application to the Iowa department of public health by December 1 of each year, beginning on December 1, 2003, for the program year of July 1, 2004, through June 30, 2005. An individual local board of health may submit or be included in only one application for status as an approved program. An application for status as an approved program must follow the format which will be made available from the Lead Poisoning Prevention Program, Iowa Department of Public Health, Lucas State Office Building, Des Moines, Iowa 50319-0075. All materials submitted as part of the application for status as an approved program are public records.

72.2(3) A local board applying for status as an approved program must demonstrate that it is prepared to provide the following activities and authority immediately upon the receipt of funding. The application submitted by a local board of health shall specify the name of the agency and of the individual staff member who will be responsible for carrying out each of the following activities:

a. A public education program about lead poisoning and the dangers of lead poisoning to children.

b. An effective outreach effort to ensure the availability of services in the geographic area to be served.

c. A blood lead testing program for children, with an emphasis on children less than six years of age. Blood lead testing should be done in conformance with the department's statewide blood lead testing plan, available on request from the department.

d. Provision of laboratory services, in conformance with the above-cited reference.

e. A program to ensure that children identified with blood lead levels greater than or equal to 10 micrograms per deciliter receive services appropriate for the blood lead level including, but not limited to, confirmatory venous blood lead testing, follow-up capillary or venous blood lead testing, nutrition counseling, a home nursing visit, a developmental evaluation, a medical evaluation, and chelation.

f. Elevated blood lead (EBL) inspections in dwelling units associated with an elevated blood lead (EBL) child. Elevated blood lead (EBL) inspections shall be conducted by certified elevated blood lead (EBL) inspector/risk assessors employed by or under contract with a certified elevated blood lead (EBL) inspection agency.

g. Follow-up inspections to ensure that lead-based paint hazards identified in dwelling units associated with an elevated blood lead (EBL) child are corrected.

h. Adoption and enforcement of a local code which provides adequate authority to require control of lead-based paint hazards found in dwelling units associated with an elevated blood lead (EBL) child.

i. Development of a community coalition to address childhood lead poisoning prevention.

j. Management of blood lead and case management data using the Strategic Tracking of Elevated Lead Levels and Remediation (STELLAR) program.

k. A plan of intent to continue the program on a maintenance basis after the grant is discontinued.

72.2(4) By January 1 of each year, the department shall notify each local board of health that has applied for status as an approved program whether the local board of health has been granted status as an approved program, beginning January 1, 2004, for the program year of July 1, 2004, through June 30, 2005.

72.2(5) A county that receives childhood lead poisoning prevention funding from the department for the program year of July 1, 2002, through June 30, 2003, shall have status as an approved program for the program year of July 1, 2003, through June 30, 2004. Unless the local board of health requests otherwise by March 1, 2003, the contractors that provide childhood lead poisoning prevention services in the county for the program year of July 1, 2002, through June 30, 2003, shall continue to serve as contractors for the program year of July 1, 2003, through June 30, 2004.

641—72.3(135) Level of funding.

72.3(1) The department shall develop a formula to allocate funding to approved programs. In the development of the formula, the department shall consider factors that affect the burden of childhood lead poisoning in a geographic area including, but not limited to, the number of children under the age of six years, the percentage of housing built before 1950, the percentage of children in poverty, and the demonstrated prevalence of childhood lead poisoning in the geographic area to be served.

72.3(2) The department shall allocate state funds appropriated to the department for this program according to this formula. Federal funds available to the department for local childhood lead poisoning prevention programs shall be allocated to approved programs according to this formula unless a different method is mandated by the federal agency providing the funding.

72.3(3) The approved program shall provide one dollar for every three dollars of state funding awarded for each of the first two years of funding and then one dollar for each dollar of state funding awarded for the third and subsequent years of funding. Local contributions may be in the form of in-kind matching.

72.3(4) Matching requirements for federal funding allocated to approved programs shall be as mandated by the federal agency providing the funding.

72.3(5) On January 1, April 1, and June 1 of each year, the department shall ask each approved program to estimate the amount of funds that the approved program will not use. The department may

allocate these funds to approved programs with demonstrated special needs for childhood lead poisoning prevention services.

641—72.4(135) Appeals.

72.4(1) Any applicant that has timely filed an application and is aggrieved by the decision made pursuant to these rules regarding the applicant's status as an approved program may request a reconsideration of the applicant's proposal by filing a written request for reconsideration with the director of the Iowa department of public health. The request shall be filed within three working days of the date of notification of the decision regarding the applicant's status as an approved program.

72.4(2) A request for reconsideration must be in writing and clearly state the reasons for reconsideration. The director's scope of review for requests shall be limited to a finding that the department erred in following the rules or procedures of the approval process as outlined in these administrative rules.

72.4(3) The department shall refrain from allocating any funds until it has received the decision of the director as to any reconsideration. The review shall be conducted as expeditiously as possible so that all funds can be allocated in a timely fashion.

72.4(4) This procedure shall end the review process at the administrative level.

These rules are intended to implement Iowa Code sections 135.100 to 135.105.

[Filed 11/13/87, Notice 9/9/87—published 12/2/87, effective 1/6/88]
[Filed 9/14/01, Notice 8/8/01—published 10/3/01, effective 11/7/01]
[Filed 11/15/02, Notice 10/2/02—published 12/11/02, effective 1/15/03]

CHAPTER 73
SPECIAL SUPPLEMENTAL NUTRITION PROGRAM FOR WOMEN, INFANTS, AND CHILDREN (WIC)

[Prior to 7/29/87, Health Department[470] Ch 73]

641—73.1(135) Program explanation. The Special Supplemental Nutrition Program for Women, Infants, and Children (WIC) is a federal program operated pursuant to agreement with the states. The purpose of the program is to provide supplemental foods and nutrition education to eligible pregnant, postpartum, and breastfeeding women, infants, and young children from families with inadequate incomes. The WIC program is administered on the federal level by the U.S. Department of Agriculture, Food and Nutrition Service (FNS). The Iowa department of public health serves as the administering agency for the state of Iowa. The Iowa department of public health enters into contracts with selected local agencies on an annual basis for the provision of WIC services to eligible participants.

641—73.2(135) Adoption by reference. Federal regulations found at 7 CFR Part 246 (effective as of February 13, 1985, as amended through September 27, 2006, and any additional amendments) shall be the authority for rules governing the Iowa WIC program and are incorporated by reference herein. The WIC state plan provides policy and procedural guidance in the implementation of these regulations to contract agencies administering WIC programs. The WIC state plan as approved by the United States Department of Agriculture is incorporated herein by reference.

641—73.3(135) Availability of rules. Copies of the federal rules and the WIC state plan adopted by reference in 73.2(135) are available from: Chief, Bureau of Nutrition and Health Promotion, Iowa Department of Public Health, Lucas State Office Building, 321 East 12th Street, Des Moines, Iowa 50319-0075, (515)281-4919.

641—73.4(135) Certain rules exempted from public participation. The Iowa department of public health finds that certain rules should be exempted from notice and public participation as being in a very narrowly tailored category of rules for which notice and public participation are unnecessary as provided in Iowa Code section 17A.4(2). Such rules shall be those that are mandated by federal law and regulation governing the Iowa WIC program where the department has no option but to adopt such rules as specified and where federal funding for the WIC program is contingent upon the adoption of the rules.

641—73.5(135) Definitions.

"Applicant" means a person applying for the WIC program, but not yet a participant of the WIC program.

"Breastfeeding women" means women up to one year postpartum who are breastfeeding their infants.

"Certification" means the implementation of criteria and procedures to assess and document each applicant's eligibility for the program.

"Children" means persons who have had their first birthday but have not yet attained their fifth birthday.

"Competent professional authority" or *"CPA"* means an individual on the staff of the contract agency who, using standardized WIC screening tools and eligibility criteria provided by the department, determines whether an applicant for WIC services is eligible to receive those services. A CPA shall be a member of one of the following categories:

1. A dietitian licensed by the Iowa board of dietetic examiners;
2. A nutrition educator as defined in the Iowa WIC Policy and Procedure Manual;
3. A physician, registered nurse or licensed physician assistant.

"Contract agency" means a private, nonprofit or public agency that has a contract with the department to provide WIC services and receives funds from the department for that purpose.

"Department" means the Iowa department of public health.

"Director" means the director of the Iowa department of public health.

"Division director" means the director of the division of health promotion and chronic disease prevention, Iowa department of public health.

"Family" means a group of related or nonrelated individuals who are living together as one economic unit, except that residents of a homeless facility or an institution shall not all be considered as members of a single family.

"Food instrument" means a voucher, check, coupon, electronic benefits transfer (EBT) card or any other document used to obtain supplemental foods.

"HAWK-I" means healthy and well kids in Iowa and is the health insurance program in Iowa, as authorized in Title XXI of the Social Security Act.

"Health professional" means an individual who is licensed to provide health care or social services within the individual's scope of practice.

"Health services" means ongoing, routine pediatric and obstetric care (such as infant and child care and prenatal and postpartum examinations) or referral for treatment.

"Hearing officer" means the contract agency director, health professional, community leader or impartial citizen who is designated to hear the appeal of a participant, and is not to be confused with the statutory definition of a hearing officer, which is an administrative law judge.

"Infants" means persons under one year of age.

"Nutritional risk" means: (a) detrimental or abnormal nutritional conditions detectable by biochemical or anthropometric measurements; (b) other documented nutritionally related medical conditions; (c) dietary deficiencies that impair or endanger health; or (d) conditions that predispose persons to inadequate nutritional patterns or nutritionally related medical conditions.

"Nutrition education" means individual or group education sessions and the provision of information and educational materials designed to improve health status, achieve positive change in dietary habits, and emphasize relationships between nutrition and health, all in keeping with the individual's personal, cultural, and socioeconomic preferences.

"Participants" means pregnant women, breastfeeding women, postpartum women, infants and children who are receiving supplemental foods under the program, and the breastfed infants of participant breastfeeding women.

"Peer group" means a system of grouping WIC vendors according to structure; type; number of cash registers; square footage; and sales. Peer groups are used to establish statistical norms that an individual store may be compared against and provide the numeric baselines for the process of determining what may be fraudulent behavior.

"Postpartum women" means women up to six months postpregnancy who are not breastfeeding.

"Pregnant women" means women determined to have one or more embryos or fetuses in utero.

"Program" means the Special Supplemental Nutrition Program for Women, Infants, and Children (WIC) authorized by Section 17 of the Child Nutrition Act of 1966.

"Vendor" means a retail outlet that provides supplemental food to WIC program participants.

641—73.6(135) Staffing of contract agencies.

73.6(1) Rescinded IAB 10/9/96, effective 11/13/96.

73.6(2) The competent professional authority shall conduct either the diet history or the health history part of the certification process and shall sign the certification form attesting to the applicant's eligibility for services after the certification process is completed.

73.6(3) Contract agencies shall maintain on file documentation of qualifications for any individual employed or under contract as a CPA.

73.6(4) All contract agencies shall employ at least one licensed dietitian to provide services for participants determined to be at high risk. Nutrition educators employed by a contract agency shall be supervised by a licensed dietitian.

73.6(5) Rescinded IAB 10/9/96, effective 11/13/96.

73.6(6) Contract agencies shall submit the license number of each dietitian hired within 30 days of employment.

73.6(7) Proposed staffing patterns within contract agencies shall be subject to approval from the department following review in accord with established statewide WIC staff patterns.

641—73.7(135) Certification of participants. The certification process to determine eligibility for WIC services, as defined in 7 CFR 246.7, shall include the following procedures and definitions:

73.7(1) *Application.* Information on identity, address, family incomes, and nutrition risk must be collected in accordance with the Iowa WIC Policy and Procedure Manual.

73.7(2) *Income.*

a. The income guidelines used shall be the same as the National School Lunch Program guidelines for reduced price school lunches, which are equal to 185 percent of the current federal poverty guidelines. Definitions of income are mandated by federal regulation and are described in the WIC state plan. Revised dollar figures for the 185 percent poverty level are published annually in the Federal Register and become effective for WIC no later than July 1 following their publication. Copies of the income definitions and monetary guidelines are available from the department.

b. Applicants must provide the contract agency written proof of their income as part of each certification process, pursuant to the Iowa WIC Policy and Procedure Manual.

73.7(3) *Time frame for services.*

a. The date of initial visit shall be the day on which an applicant first requests services from a contract agency. A visit to another program office to complete a common application form does not constitute an initial visit.

b. Pregnant women shall be certified for the duration of their pregnancy and for up to six weeks postpartum. Pregnant women precertified with referral data require a full certification within 30 days.

c. Rescinded IAB 5/30/01, effective 7/4/01.

d. Priority II infants pre-certified with referral data require a full certification within six weeks of the infant's birth.

73.7(4) *Medical equipment.*

a. Medical equipment used in conducting WIC clinics shall be subject to approval by the department.

b. Standards for conducting the medical and nutritional assessments on program applicants shall be as described in the Iowa WIC Policy and Procedure Manual.

c. Medical equipment shall be recalibrated in accord with procedures outlined in the Iowa WIC Policy and Procedure Manual.

73.7(5) *Documentation of health and nutrition information.* Documentation of health and nutrition information in individual participant records shall be as described in the Iowa WIC Policy and Procedure Manual.

73.7(6) *Documentation of nonmedical information.* Documentation of nonmedical information in individual participant and collective program records shall be as described in the Iowa WIC Policy and Procedure Manual.

73.7(7) *Transfer of participant information.* Requirements for use and disclosure of confidential applicant and participant information for non-WIC purposes were revised in the Federal Register September 27, 2006, Department of Agriculture, Food and Nutrition Service, 7 CFR Part 246, Miscellaneous Provisions; Final Rule 246.25(a)(4).

a. Designation by chief state health officer. The chief state health officer must designate in writing the permitted non-WIC uses of the information and the names of the organizations to which such information may be disclosed.

b. Notice to applicants and participants. The applicant or participant will be notified at the time of application (in accordance with 7 CFR 246.7(i)(11)) or through a subsequent notice that the chief state health officer may authorize the use and disclosure of information about an applicant's or participant's participation in the WIC program for non-WIC purposes. This statement will also indicate that such information will be used by state and local WIC agencies and public organizations only in the administration of programs that serve persons eligible for the WIC program.

c. Written agreement and WIC state plan. The state or local agency disclosing the information will enter into a written agreement with the other public organization or, in the case of a non-WIC use by a state or local WIC agency, the unit of the state or local agency that will be using the information. The state agency will also include in its state plan, as specified in 7 CFR 246.4(a)(24), a list of all organizations (including units of the state agency or local agencies) with which the state agency or its local agencies have executed or intend to execute a written agreement. The written agreement must:

(1) Specify that the receiving organization may use the confidential applicant and participant information only for:

1. Establishing the eligibility of WIC applicants or participants for the programs that the organization administers;

2. Conducting outreach to WIC applicants and participants for such programs;

3. Enhancing the health, education, or well-being of WIC applicants or participants who are currently enrolled in such programs, including the reporting of known or suspected child abuse or neglect that is not otherwise required by state law;

4. Streamlining administrative procedures in order to minimize burdens on staff, applicants, or participants in either the receiving program or the WIC program; or

5. Assessing and evaluating the responsiveness of a state's health system to participants' health care needs and health care outcomes; and

(2) Contain the receiving organization's assurance that it will not use the information for any other purpose or disclose the information to a third party.

641—73.8(135) Food delivery. Food delivery refers to all aspects of the method by which WIC participants receive food benefits, i.e., printing, distribution, and processing of computerized personal food instruments redeemable through retail food markets and the statewide banking system. Food delivery shall be uniform throughout the state as provided for by these rules.

73.8(1) *Responsibilities of WIC participants.*

a. Prompt redemption of food instruments. A WIC participant must redeem WIC benefits within the validated date of use.

b. Claiming food instruments. Enrolled participants are required to appear in person to claim food instruments when they have appointments to certify or have nutrition education contacts. Missed attendance may entitle contract agencies to deny that month's benefit. If a written statement is provided to the contract agency, a proxy may pick up food instruments.

c. Adherence to standards for use of the food instrument. The WIC participant in using the WIC food instrument to obtain the specified foods shall:

(1) Sign the WIC identification card at the time of receipt in the clinic.

(2) Present the WIC identification card to the vendor at point of purchase.

(3) Sign each food instrument in the appropriate box in the presence of the vendor.

(4) Write in the total amount of the purchase in the designated space.

(5) Not accept money in exchange for unused food instruments or portions of the food allotment.

(6) Attempt to redeem food instruments only with a WIC-contracted vendor.

73.8(2) *Responsibilities of contract agencies.*

a. Loss or theft of food instruments. The contract agency is responsible for any financial loss due to theft or other loss of food instruments from clinics. Steps for minimizing the chances of theft or loss are followed in accord with the Iowa WIC Policy and Procedure Manual.

b. Mailing of WIC food instruments. Mailing of food instruments to participants is allowed when inclement weather prevents participants from coming to a distribution site. Any mailing of WIC food instruments on a clinicwide basis must have prior approval from the state.

c. Use of manual food instruments. Rescinded IAB 1/30/08, effective 3/5/08.

d. Training/monitoring of WIC vendors. The contract agency shall communicate information regarding the Iowa WIC program to vendors, as instructed by the department. Monitoring and training of vendors and securement of contracts shall be carried out in accordance with department directives outlined in the Iowa WIC Policy and Procedure Manual.

e. *Food instrument distribution on nonclinic days.* It is the policy of the Iowa WIC program to ensure maximum accessibility to program benefits by establishing alternate procedures for distributing WIC food instruments to participants on days other than regularly scheduled clinic days when the participant notified the contract agency on or before the clinic day of the participant's inability to appear at the clinic. Each contract agency shall establish written guidelines for assessing the adequacy of reasons presented for inability to appear and shall establish written procedures for alternative means of food instrument distribution when a participant timely presents adequate reasons for inability to appear on a regularly scheduled clinic day. These written guidelines and procedures shall be subject to review and approval by the department.

73.8(3) *Responsibilities of department.* Provision of foods through retail grocers and special purpose vendors is an integral part of the WIC program's function. It is the responsibility of the department to ensure that there are a sufficient number of stores authorized to provide reasonable access for program participants. The department also has an obligation to ensure that both food and administrative funds are expended in the most efficient manner possible. As with all other purchases made by state government, this means that the number of vendors (retail grocers and special purpose vendors) may be limited and that all vendors must meet minimum criteria for approval. A retailer that intends to derive more than 50 percent of annual revenue of the sale of food items from the redemption of WIC food instruments will not be allowed. The department shall be responsible for the following:

a. Approving or denying vendor applications. The department shall determine if applications meet the mandatory specifications in 73.8(4) and meet the minimum review points in 73.8(4) for a subsequent agreement.

b. Compiling the statewide or local area composite data against which vendor applications are reviewed, determining if applications meet the selection criteria which require use of that data, providing training, and signing the initial authorization agreement if a vendor is determined to be eligible.

c. Developing procedures, forms, and standards for agencies to use in conducting on-site review of vendor applications, monitoring, compliance buys, educational buy monitoring, or compliance investigations as defined in 73.8(5).

d. Determining when compliance investigation activities are necessary to verify program violations, developing or approving standards and procedures to be used in conducting the activities, and arranging for an appropriate state or private agency to conduct the compliance buying investigation as required.

e. Providing written notice to vendors of program violations and sanctions.

73.8(4) *Responsibilities of WIC vendors.* A potential vendor shall make application to the Iowa department of public health WIC program and shall accept the obligations imposed by the signing of a WIC vendor agreement prior to acceptance of any WIC food instrument. The two categories for which any potential vendor may apply are grocery vendors and special purpose vendors. A retailer that intends to derive more than 50 percent of annual revenue of the sale of food items from the redemption of WIC food instruments will not be approved.

a. *Grocery vendor agreement.* To qualify for a grocery vendor agreement with the Iowa WIC program, a retail outlet shall meet all of the following criteria:

(1) The vendor must stock all of the following categories of items to be defined as a grocery vendor: a minimum of 5 linear feet of raw fruits and vegetables; a minimum of 12 linear feet of unbreaded fresh or frozen meats and poultry (prepackaged luncheon meats do not qualify); canned and frozen vegetables; dairy products; and cereals.

(2) No more than 20 percent of the vendor's gross retail sales may be from the sale of gasoline or other automotive supplies.

(3) No more than 20 percent of the vendor's gross retail sales may be from the sale of alcoholic beverages and tobacco products.

(4) The vendor must maintain regular business hours. This shall include a minimum of two 4-hour blocks of time on each of five days per week. Daily operating hours shall be consistent from week to week, and shall be posted.

(5) The vendor must stock the minimum variety and quantity of WIC-approved foods as defined in the latest revised version of the Iowa WIC vendor application.

The specific brands of products that are included on the WIC-approved food list shall be made available to the vendor at the time of application and prior to renewal of each agreement.

The variety and quantity in stock are defined as including both inventory on display and in on-premises storage, but not inventory on order from suppliers.

(6) A vendor shall charge a price to WIC participants that is equal to or less than the price charged to all other customers. The prices charged to WIC participants for the average of all WIC items, as reported on the application, at the time of the on-site review, and throughout the agreement period, shall not exceed 105 percent of the average prices of all other WIC vendors in the same peer group. The vendor's average price for any category of WIC items, as reported on the application, at the time of the on-site review, and throughout the agreement period, shall not exceed 115 percent of the average price charged for the same category by all other WIC vendors in the same peer group. Categories refer to the broad groupings of items rather than specific brands. For purposes of making the price comparisons, the average price for all other WIC vendors in the peer group shall be computed from the most recent Price Assessment Reports on file from those vendors. If a vendor intends to comply with this provision by charging WIC participants a lower price than the price charged to other customers, the WIC price for each approved item must be identified on the package or shelf front.

(7) There must be a minimum of five current WIC participants residing in the same ZIP code area as the vendor.

(8) The vendor must not have had a food stamp program disqualification or civil monetary penalty imposed within the 12 months preceding the date of the application or reauthorization.

(9) The vendor must not have had a WIC program suspension imposed or a WIC application denied within the six-month period preceding the date of the application.

(10) The vendor must not have had a conviction or civil judgment for any activity that indicates a lack of business integrity against any of the officers or owners during the previous six years.

(11) The vendor must accept training on WIC program regulations prior to signing an agreement and must agree to provide training to all employees who will handle WIC food instruments prior to accepting any food instruments.

(12) The vendor must agree to adhere to all provisions of the WIC Vendor Instructions and Agreement Booklet.

b. *Special purpose vendor.* To qualify as a special purpose vendor, a retail outlet shall meet all of the following criteria:

(1) The vendor may be primarily a retailer of any type of merchandise but shall be authorized to provide only specified infant formula in exchange for WIC food instruments.

(2) The vendor must be able to provide the specified formula within 48 hours; 72 hours if a weekend or holiday is involved.

(3) The prices charged WIC participants must be equal to or less than the prices charged all other customers. The average price of each brand of infant formula sold to WIC participants as reported must not exceed the average price of the same brands of infant formula charged by all authorized WIC grocery vendors in the same peer group.

(4) The vendor shall meet the criteria in paragraph *"a,"* subparagraphs (2) to (4) and (6) to (12), for grocery vendors.

(5) The vendor must agree to adhere to applicable provisions of the WIC Vendor Instructions and Agreement Booklet.

(6) Vendors that derive more than 50 percent of annual revenue of the sale of food items from the redemption of WIC food instruments are not allowed.

The department shall review each vendor application within five working days of receipt and determine if the information provided indicates that the retail outlet meets the selection criteria. If the application shows that the vendor does not meet one or more of the criteria, the department shall deny the application. If the vendor's application indicates that the vendor would qualify, the department or contract agency shall make an on-site visit to verify that the information provided in the application

is correct, to provide training, and sign the agreement. If the department or contract agency finds that the vendor has two or more types of out-of-date, stale, or moldy WIC foods in stock during the on-site visit, the vendor's application may be denied. If the contract agency or department determines during the on-site visit that the vendor does not qualify, the contract agency or department shall not sign the agreement. Within five working days of disapproving an application or agreement, the department will advise the vendor in writing of the reasons for denial of the application and the procedure for appeal. During the on-site visit, the contract agency representative is acting as an agent of the department and has the authority to approve or deny an application.

A vendor that is denied an agreement, either at the application review level or at the on-site review, is required to wait six months prior to submitting a new application. The department may, at its discretion, request a vendor to resubmit an application prior to completing its review if the application has not been completed to the extent that a determination of eligibility can be made.

c. Reauthorization. If ownership of an authorized vendor changes during the agreement period, the agreement becomes void. The new owner must file an application and be approved prior to accepting WIC food instruments. Vendor agreements are valid only for the period of time specified, and a vendor may not continue accepting food instruments past the expiration date unless a new agreement is signed. When a currently authorized vendor makes application for a subsequent agreement, an agreement shall be signed only if the vendor has been assessed less than 60 violation points under paragraph 73.19(2)*"b"* within the previous 24 months.

Vendors must complete a new application and sign a new WIC vendor agreement at least every three years to continue accepting WIC food instruments.

The department shall send the vendor written notice at least 30 days prior to the expiration of the agreement that it does not intend to offer the vendor a new agreement if the vendor has been assessed 60 or more violation points under paragraph 73.19(2)*"b"* within the last 24 months, or if any of the following conditions are in effect:

(1) The vendor has failed to submit any of the preceding year's Price Assessment Reports by the specified dates.

(2) The vendor has not cashed any WIC food instruments for at least two consecutive months at any time during the contract period, or has not cashed five or more WIC food instruments for any 120-day period during the contract period. A vendor will not be excluded under this provision if it is the only grocery or special purpose vendor in that ZIP code area.

(3) Any of the selection criteria listed in 73.8(4)*"a"* and *"b"* above are no longer met.

Expiration of a WIC agreement is not subject to appeal. A vendor who is not offered a new agreement by the department has the right to file a new application. If that application is denied, the vendor has the right to appeal.

d. Training. Vendors shall accept training in program policies and procedures at the on-site review prior to becoming an authorized vendor and shall be responsible for training all employees who will be handling WIC food instruments. The manager and person responsible for staff training must allow time at this visit for training; the agreement will not be signed until training is completed. Vendors shall be responsible for all actions of their employees in conducting WIC transactions.

If violations of program policies and procedures are documented, either through on-site monitoring or other indirect means, the vendor shall implement a corrective action training plan developed jointly by the vendor and the department or contract agency.

e. Validity of food instruments. The WIC vendor shall be responsible for ensuring that:

(1) The participant signature required on the food instrument is completed in the vendor's presence;

(2) The participant presents a WIC identification card prior to redeeming food instruments. A signature on the WIC identification card must match the food instrument signature;

(3) The type and quantity of food to be purchased is as indicated on the food instrument;

(4) The amount of money written onto the food instrument for repayment does not exceed the maximum amount as designated by the department and printed on the food instrument;

(5) The expiration date is present on the food instrument and is equal to or no later than the date of usage;

(6) WIC food instruments are never exchanged for cash or credit;

(7) Substitutions of foods different from those listed on the food instrument in type or amount are not made;

(8) Food instruments are presented to the state's agent (bank) for payment within 15 days of the date of receipt;

(9) The costs of foods purchased by WIC participants do not exceed charges to other customers for the same foods;

(10) The vendor's authorizing number is stamped with the state-issued vendor stamp on the face of the food instrument prior to its being presented for payment.

f. *Cooperation during monitorings.* Contracted WIC vendors shall cooperate with department and contract agency staff who are present on site to monitor the store's WIC activities.

g. *Reimbursement to the program.* Vendors determined by the department to have collected more moneys than the true value of food items received shall make reimbursement to the department.

73.8(5) *Vendor monitoring.* To maintain program integrity and accountability for federal or state program funds, the department and contract agencies shall conduct ongoing monitoring of authorized vendors, both through on-site visits and through indirect means. A sample of 10 percent of currently authorized vendors receives on-site monitoring every year. Vendors that change ownership during the year, or apply during the contract period, receive an on-site visit prior to signing an agreement. The types of on-site monitoring are defined as follows:

a. Routine or representative monitoring is used for vendors for which there is no record of violations or complaints or other indication of problems. It may include any or all of the following: use of a food instrument or observation of a participant, educational buys, review of inventory levels, examination of redeemed WIC food instruments on hand, review of store policies on return items, and review of employee training procedures. The results of the monitoring are reviewed with the owner or manager on duty, and a follow-up letter confirming the findings is sent from the department. Routine monitoring may be performed by the department or by contract agency staff under the direction of the department. Depending on the nature and severity of violations noted, the department may schedule additional visits, initiate a compliance investigation, or apply sanctions.

Educational buy monitoring is a specialized type of routine monitoring. Department or contract agency staff attempt to use a WIC food instrument to purchase unauthorized types or brands of foods to test the level of training of store employees. At the conclusion of the transaction, the results of the buy are discussed with the store owner or manager on duty. The transaction is then voided, and the merchandise returned to the shelves. Educational buys are used on authorized vendors selected by the department. If unauthorized items are allowed to be purchased, the vendor shall agree to a corrective action training plan. A follow-up educational buy is scheduled within 30 to 90 days. A letter is sent from the department documenting the violation. By signing a WIC agreement, a vendor gives consent for educational buys by the department or contract agency. Vendors are not notified in advance that an educational buy is scheduled. The protocol for educational buys, including procedures, appropriate items to purchase, and forms to be used, is specified in the Iowa WIC Policy and Procedure Manual.

b. Electronic monitoring is examination of indicators tracked in the vendor computer database. It allows the analysis of data collected via computer from the contract agencies and the state's bank, from which patterns indicating compliance with or deviation from established patterns for Iowa WIC vendors emerge. Data is collected daily and reviewed on an ongoing basis. Trends identified can necessitate another type of monitoring, depending on the nature of each exception.

c. Compliance investigations may be used for any vendors. Compliance investigations will be conducted annually in a minimum percentage of vendors as mandated in federal regulations. A compliance investigation includes a sufficient number of compliance buys to provide evidence of program noncompliance, two compliance buys in which no program violations are found, or when an inventory audit has been completed. A compliance buy means a covert, on-site investigation in which a representative of the program poses as a participant, parent or caretaker, or proxy, transacts one or more food instruments and does not reveal during the visit that he or she is a WIC representative. Compliance buys may be performed by the department or another state agency or private company under contract

with the department. The department is responsible for identifying the vendors to be investigated and for approving the protocol to be used during the investigation. Upon completion of a compliance buy documenting program violations, the department shall issue the vendor a notice of violation points assessed unless such notification would hinder an investigation.

The department also monitors vendor performance through in-office review of information. Such information, specifically the total amount of WIC redemptions, is confidential as provided for in Iowa Code section 22.7(6). This business information could provide an advantage to competitors and would serve no public purpose if made available.

641—73.9(135) Food package. The authorized supplemental foods shall be prescribed for participants by a CPA in the contract agency from food packages outlined in 7 CFR 246.10 and in accordance with the following:

73.9(1) *Prescription of foods.* Food packages shall maintain a balance between cost and nutrition integrity. There are two components to this balance: (1) administrative adjustments by the department; and (2) nutrition tailoring by both the department and the CPA in the contract agencies.

a. Administrative adjustments include restrictions in the packaging methods, brands, sizes, types, and forms (but not quantities) of the federally allowable foods in order to establish the approved food list for the state. Administrative adjustments include decisions to eliminate more expensive brands or prohibit more costly food items allowed by regulations. Criteria for considering foods for inclusion in the approved food list are found in 73.9(3).

b. Nutrition tailoring includes changes or substitutions to food types, forms, and quantities in order to prescribe food packages that better meet the nutritional needs of participants. Tailoring is done to reduce quantities of foods based on nutritional needs, to accommodate participant preferences, to accommodate household conditions such as lack of refrigeration or other special needs and problems of homeless or transient participants, and to recommend or prescribe specific forms of the allowable WIC foods based upon a participant's nutritional needs or goals.

c. Rescinded IAB 8/4/04, effective 9/8/04.

73.9(2) *Tailoring to meet individual nutrition needs.* Food packages are individually tailored to meet the needs of specific participants according to USDA regulations and the Iowa WIC Policy and Procedure Manual.

73.9(3) *Criteria for approving products for inclusion in the WIC food package.*

a. A product shall meet the federal regulations governing the WIC food package.

b. Variety in the food package is encouraged to increase the likelihood of products being used and to allow participants to exercise responsibility in shopping.

c. Changes to the approved food list take effect on October 1 in years when new vendor contracts are signed. Inquiries from food companies about new and continuing products must be received prior to February 1 of the year vendor contracts expire to be guaranteed consideration. The state reserves the right to change the food list more frequently if necessary.

d. Cereals shall meet federal guidelines for content and shall also meet the following conditions:

(1) They are carried by current Iowa WIC-approved vendors.

(2) The product form and marketing approach are consistent with the promotion of good nutrition and education.

(3) If a group of cereals from one manufacturer have similar names and package designs and some do not qualify, the department reserves the right to not approve those types that would otherwise qualify, to reduce the potential for confusion by retail vendors and participants.

(4) Ready-to-eat cold cereals are ranked by the six major distributors to Iowa grocery retailers based on volume of total sales. Hot cereals are ranked in the same way. Multiple container sizes of a single cereal variety shall be considered as one variety for the purposes of constructing this ranking. The department compiles data from all distributors to develop an overall ranking or ranked list. At least half of the cereals authorized on the WIC-approved food list must have whole grain as the primary ingredient by weight and must meet labeling requirements for making a health claim as a whole grain food with

moderate fat content. The department reserves the right to limit the number of approved cereals for administrative efficiency.

(5) Product has been available in retail grocery stores in Iowa for one year prior to the effective date of inclusion in the WIC-approved food list.

e. Juices shall meet the federal guidelines for vitamin C content and all of the following conditions:

(1) Juices are 100 percent juice and contain no added sugar, sweeteners or artificial sweeteners.

(2) The brand is carried by current Iowa WIC-approved vendors. Juices are ranked by the six major distributors to Iowa grocery retailers based on volume of total sales. Any private-label (store) brands that meet the selection criteria will also be considered.

(3) The product form and marketing approach are consistent with the promotion of good nutrition and education.

(4) If a group of juices from one manufacturer have similar names and package designs and some do not qualify, the department reserves the right to not approve those types that would otherwise qualify, to reduce the potential for confusion by retail vendors and participants. Single-strength and concentrated varieties of juice with the same brand name will be evaluated separately.

(5) Product has been available in retail grocery stores in Iowa for one year prior to the effective date of inclusion in the WIC-approved food list.

(6) Frozen fruit juices must be single flavors.

f. The following conditions apply to dairy products:

(1) To qualify, brands of whole, 1%, or fat-free skim milk marketed in Iowa must contain or be fortified with vitamins A and D to meet the federal standards. The department reserves the right to disqualify brands which have a retail value of 115 percent or higher than the state average for this product.

(2) Fluid milk with added bacterial cultures or enzymes, including but not limited to sweet acidophilus or lactose-reduced milk, may qualify. Brands are approved by the department on a case-by-case basis.

(3) All brands of natural cheese designated in the USDA WIC regulations qualify. The cheese shall have no added flavors (e.g., smoke flavoring, peppers, wine).

g. All brands of dried beans or peas are approved whether packaged or purchased in bulk; however, no mixes are allowed.

h. Any brand of peanut butter qualifies as long as it does not contain other ingredients such as jelly. Brands may be either refrigerated or nonrefrigerated.

i. Eggs shall be fresh, Grade A or AA large chicken eggs. Eggs which have a retail value of 115 percent or higher than the state average for this product shall not be approved.

j. Any brand of tuna or salmon qualifies if it is either water- or oil-packed, in cans or pouches, chunked, solid, or flaked. Fish packaged with other items such as crackers, relish or other flavorings may not be purchased. Albacore tuna is not allowed.

k. Commercial infant formula shall meet the following conditions:

(1) It is registered with the Food and Drug Administration as complying with the legal definition of infant formula.

(2) It complies with the calorie and iron content prescribed by the federal WIC regulations.

(3) It is approved by the USDA for use in the WIC program.

(4) The product form and marketing approach are consistent with the promotion of good nutrition and education.

(5) All of the formula marketed under one label shall meet all standards. If a similar, nonqualifying formula is marketed along with a qualifying formula, participants may be easily confused. Therefore, the qualifying formula shall not be approved.

l. At least two whole grain options that meet federal guidelines will be provided.

m. Infant food fruits, vegetables and meats must meet the federal guidelines.

n. Fresh and frozen vegetables and fruits that meet federal guidelines will be available for purchase with cash value vouchers specifically for fruits and vegetables.

o. Soy beverages shall meet federal guidelines.

p. Products will be evaluated for use in the Iowa WIC program based on nutrient content, packaging, container size, labeling, availability to wholesale distributors, cost and participant preference. The state reserves the right to limit the number of foods for the WIC-approved food list based on accessibility, availability, retail value of product, USDA recommendations, increased number of WIC participants, changes in appropriation of funds and administrative efficiency.

q. In addition to the criteria specified above, the department reserves the right to further restrict the number of brands of any products in order to contain the cost of the food package through competitive procurement of rebate contracts or other similar means.

r. The department reserves the right to discontinue specific brand names and products if the cost is 115 percent or higher than the state average for that particular product.

[**ARC 7984B**, IAB 7/29/09, effective 9/2/09]

641—73.10(135) Education.

73.10(1) *Nutrition education for WIC participants.*

a. Nutrition education is provided as a benefit to all women and to parents of all children enrolled in the program.

b. A minimum of two nutrition education contacts shall be offered to each woman participant or the parent/guardian of children participating in WIC during each certification period.

c. Nutrition education shall be based on information obtained through the diet and health histories and shall be tailored to the specific nutrition need of the participant.

d. All pregnant women enrolled in WIC shall receive education on the benefits of breastfeeding.

e. Education in normal nutrition, i.e., education in nutrition for life-cycle stages, shall be provided in accordance with the Iowa WIC Policy and Procedure Manual.

f. Participants who are at high risk, as defined in the Iowa WIC Policy and Procedure Manual, shall receive counseling and a nutrition plan of care developed by a licensed dietitian. The plan of care shall be documented in the participant record and shall include scheduling a minimum of one individual education contact by a licensed dietitian.

g. The department shall make nutrition education materials and resources available at no cost to contract agencies. The department reserves the right to review and approve or disapprove any printed materials or lesson plans developed by contract agencies.

h. To the extent that time and resources are available, nutrition education may be provided to applicants who are not eligible to receive other WIC services.

73.10(2) *Education of contract agency personnel.* Agencies accepting WIC funds shall be responsible for ensuring that all agency staff or contractors are adequately trained for their responsibilities. At a minimum, training shall include the components described in the Iowa WIC Policy and Procedure Manual.

Continuing education is an allowable WIC administrative expense for contract agency staff and contractors who provide nutrition education.

641—73.11(135) Health services. The WIC program shall serve in the arrangement of ongoing health services for its participants. Health services are defined to include ongoing, routine pediatric and obstetrical care, and referral for diagnosis and treatment of any other condition. Contract agencies not able to provide such health services directly shall enter into written agreements with other public health agency(ies) or private physician to ensure availability of health services.

73.11(1) *Written agreements.*

a. *Contract for services.* Contract agencies shall maintain an annual written, contractual agreement with any health agency performing WIC health assessments, whether for fee or exchange of service.

b. *Memorandum of understanding.* Contract agencies shall maintain a current memorandum of understanding with any health agency designated to provide ongoing health services to WIC participants and with any agency providing referral data for precertification of infants and pregnant women.

73.11(2) *Referral procedures.* The contract agency shall be responsible for referral of WIC participants to appropriate health care providers, as determined by the WIC health professional's assessment of their condition.

a. *Authorization for release of information.* Except as indicated below, before releasing medical or other personal information, including name, to an outside agency, the contract agency shall secure the participant's or parent/legal guardian's written authorization to release such information. A statement shall be signed for each specific provider to which information is being sent. The information contained in individual participant records shall be confidential pursuant to 7 CFR 246.26.

Referrals to the department of human services' child protective services for investigation of potential child abuse or to a law enforcement agency conducting an active criminal investigation may be made without obtaining a written release of information. Procedures for responding to a subpoena are made in accordance with the Iowa WIC Policy and Procedure Manual.

b. *The referral form.* A standard referral form, as provided by the department, shall be completed and sent to the referral agency. Documentation and follow-up are made in accord with the Iowa WIC Policy and Procedure Manual.

641—73.12(135) Appeals and fair hearings—local agencies and vendors.

73.12(1) *Right of appeal.* The right to appeal shall be granted when a local agency's or a vendor's application to participate is denied. The right to appeal shall also be granted when, during the course of the contract or agreement period, a local agency or vendor is disqualified or any other action which affects participation is taken. For participating vendors, a minimum of 30 days' advance notice will be given before the effective date of the action. For participating contract agencies, a minimum of 60 days' advance notice will be given before the effective date of the action. The right to appeal shall not be granted in the following circumstances:

a. When a vendor's contract expires.

b. When the department makes a determination regarding participant access.

c. When a vendor is disqualified from the WIC program as a result of a food stamp program disqualification.

d. When a vendor does not agree with the validity or appropriateness of selection criteria defined in 73.8(4).

73.12(2) *Request for hearing.* An appeal is brought by filing a written request for a hearing with the Division Director, Division of Health Promotion and Chronic Disease Prevention, Iowa Department of Public Health, Lucas State Office Building, Des Moines, Iowa 50319-0075, within ten days of receipt of notification of the adverse action. The written request for hearing shall state the adverse action being appealed.

73.12(3) *Contested cases.* Upon receipt of an appeal that meets contested case status, the appeal shall be forwarded within five working days to the department of inspections and appeals pursuant to the rules adopted by that agency regarding the transmission of contested cases. The information upon which the adverse action is based and any additional information that may be provided by the aggrieved party shall also be provided to the department of inspections and appeals.

73.12(4) *Notice of hearing.* The administrative law judge (ALJ) shall schedule the time, place and date of the hearing as expeditiously as possible. Hearings shall be conducted by telephone or in person in Des Moines at the Lucas State Office Building or other suitable location. If necessary, parties will be provided at least two opportunities to have the hearing rescheduled.

73.12(5) *Conduct of hearing.* The hearing shall be conducted according to the procedural rules of the department of inspections and appeals found in 481—Chapter 10, Iowa Administrative Code, and federal regulations found at 7 CFR 246.24. Copies of these regulations are available from the department of inspections and appeals upon request.

73.12(6) *Decision.* A written decision of the ALJ shall be issued, where possible, within 60 days from the date of the request for a hearing unless the parties agree to a longer period of time.

73.12(7) *Decision of ALJ.* When the ALJ makes a proposed decision and order, it shall be served by certified mail, return receipt requested, or delivered by personal service. That proposed decision and

order then becomes the department's final agency action without further proceedings ten days after it is received by the aggrieved party unless an appeal to the director is taken as provided in subrule 73.12(8).

73.12(8) *Appeal to director.* Any appeal to the director for review of the proposed decision and order of the ALJ shall be filed in writing and mailed to the Director, Iowa Department of Public Health, Lucas State Office Building, Des Moines, Iowa 50319-0075, by certified mail, return receipt requested, or delivered by personal service within ten days after the receipt of the ALJ's proposed decision and order by the aggrieved party. A copy of the appeal shall also be mailed to the ALJ. Any request for an appeal shall state the reason for appeal.

73.12(9) *Record of hearing.* Upon receipt of an appeal request, the ALJ shall prepare the record of the hearing for submission to the director. The record shall include the following:

a. All pleadings, motions, and rules.

b. All evidence received or considered and all other submissions by recording or transcript.

c. A statement of all matters officially noticed.

d. All questions and offers of proof, objections and rulings thereon.

e. All proposed findings and exceptions.

f. The proposed decision and order of the hearing officer.

73.12(10) *Decision of director.* The decision and order of the director becomes the department's final agency action upon receipt by the aggrieved party and shall be delivered by certified mail, return receipt requested, or by personal service.

73.12(11) *Exhausting administrative remedies.* It is not necessary to file an application for a rehearing to exhaust administrative remedies when appealing to the director or the district court as provided in Iowa Code section 17A.19. The aggrieved party to the final decision of the department who has exhausted all administrative remedies may petition for judicial review pursuant to Iowa Code chapter 17A.

73.12(12) *Petition for judicial review.* Any petition for judicial review of a decision and order shall be filed in the district court within 30 days after the decision and order becomes final. A copy of the notice of appeal shall be sent to the department by certified mail, return receipt requested, or by personal service. The address is: Division Director, Division of Health Promotion and Chronic Disease Prevention, Iowa Department of Public Health, Lucas State Office Building, Des Moines, Iowa 50319-0075.

641—73.13(135) Right to appeal—participant.

73.13(1) *Right of appeal.* A WIC participant shall have the right to appeal whenever a decision or action of the department or contract agency results in the individual's denial of participation, disqualification, or termination from the WIC program. All hearings shall be conducted in accordance with these rules.

73.13(2) *Notification of appeal rights and right to hearing.* Each program participant shall be notified in writing of the participant's right to appeal at the time of application and at the time of denial of eligibility or termination from the program (on Denial or Termination of Eligibility Form). Appeal and hearing notices shall also be written, posted, and immediately available at contract agencies to explain the method by which a hearing is requested, and that the participant may present arguments at the hearing either personally or through a representative such as a relative, friend, legal counsel, or other spokesperson.

73.13(3) *Request for hearing.* A request for hearing by an individual or the individual's parent, guardian, or other representative must be made in writing. The request for hearing shall be made to the contract agency within 90 days from the date the individual receives notice of the decision or action that is the subject of appeal.

73.13(4) *Receipt of benefits during appeal.* Participants who are involuntarily terminated from the WIC program prior to the end of the standard certification period shall continue to receive program benefits while the decision to terminate is under administrative appeal, provided that subsequent certifications are completed as required. Participants who are terminated because of categorical ineligibility (e.g., a child over five years of age) shall not continue to receive benefits during the administrative appeal period. Participants who are terminated at the end of a certification period for

failure to reapply, following notice of expiration of certification, shall not continue to receive benefits during the administrative appeal period. Applicants who are denied program benefits at the initial certification or at subsequent recertifications, due to a finding of ineligibility, shall not receive benefits during the administrative appeal period.

73.13(5) *Hearing officer.* The hearing officer shall be impartial, shall not have been directly involved in the initial determination of the action being contested, and shall not have a personal stake in the decision. If the party filing the appeal objects prior to a scheduled hearing to a contract agency director serving as a hearing officer in a case involving the director's own agency, another hearing officer shall be selected and, if necessary, the hearing shall be rescheduled as expeditiously as possible. Contract agencies may seek the assistance of the state WIC office in the appointment of a hearing officer.

73.13(6) *Notice of hearing.* The hearing officer shall schedule the time, place and date of the hearing as expeditiously as possible. Parties shall receive notice of the hearing at least ten days in advance of the scheduled hearing. The hearing shall be accessible to the party requesting the hearing. The hearing shall be scheduled within three weeks from the date the contract agency received the request for a hearing, or as soon as possible thereafter, unless a later date is agreed upon by the parties.

73.13(7) *Conduct of hearing.* The hearing shall be conducted in accordance with federal regulations found at 7 CFR Section 246.23. Copies of these regulations are available from the contract agency and the department. At a minimum, the party requesting the hearing or the party's representative shall have the opportunity to:

a. Examine, prior to and during the hearing, the documents and records presented to support the decision under appeal;

b. Be assisted or represented by an attorney or other person at the party's own expense;

c. Bring witnesses;

d. Question or refute any testimony or evidence, including an opportunity to confront and cross-examine adverse witnesses;

e. Submit evidence to establish all pertinent facts and circumstances in the case;

f. Advance arguments without undue interference.

g. If a participant fails to attend the hearing, the agency will reschedule the hearing and give the participant 20 days' notice. The participant may have another person as the participant's designee. If neither the participant nor the designee attends the second hearing, the appeal will be closed.

73.13(8) *Decision.* Decisions of the hearing officer shall be in writing and shall be based on evidence presented at the hearing. The decision shall summarize the facts of the case, specify the reasons for the decision, and identify the supporting evidence and pertinent regulations or policy. The decision shall be issued within 45 days of the receipt of the request for a hearing, unless a longer period is agreed upon by the parties.

73.13(9) *Appeal of decision to the department.* If either party to a hearing receives an unfavorable decision, that decision may be appealed to the department. Such appeals must be made within 15 days of the mailing date of the decision. Appeals shall be sent to the Division Director, Division of Health Promotion and Chronic Disease Prevention, Iowa Department of Public Health, Lucas State Office Building, Des Moines, Iowa 50319-0075.

73.13(10) *Contested case.* Upon receipt of an appeal that meets contested case status, the appeal shall be forwarded within five working days to the Iowa department of inspections and appeals pursuant to the rules adopted by that agency regarding the transmission of contested cases. The information upon which the adverse action is based and any additional information that may be provided by the aggrieved party shall also be provided to the Iowa department of inspections and appeals.

73.13(11) *Hearing.* Parties shall receive notice of the hearing in advance. The administrative law judge shall schedule the time, place and date of the hearing so that the hearing is held as expeditiously as possible. The hearing shall be conducted according to the procedural rules of the Iowa department of inspections and appeals found in 481—Chapter 10, Iowa Administrative Code.

73.13(12) *Decision of administrative law judge.* The administrative law judge's decision shall be issued within 60 days from the date of request for hearing. When the administrative law judge makes a proposed decision and order, it shall be served by certified mail, return receipt requested, or delivered by

personal service. That proposed decision and order then becomes the department's final decision without further proceedings ten days after it is received by the aggrieved party unless an appeal to the director is taken as provided in subrule 73.13(13).

73.13(13) *Appeal to director.* Any appeal to the director for review of the proposed decision and order of the administrative law judge shall be filed in writing and mailed to the Director, Iowa Department of Public Health, Lucas State Office Building, Des Moines, Iowa 50319-0075, by certified mail, return receipt requested, or delivered by personal service within ten days after the receipt of the administrative law judge's proposed decision and order by the aggrieved party. A copy of the appeal shall also be mailed to the administrative law judge. Any request for an appeal shall state the reason for appeal.

73.13(14) *Record of hearing.* Upon receipt of an appeal request, the administrative law judge shall prepare the record of the hearing for submission to the director. The record shall include the following:

a. All pleadings, motions, and rules.

b. All evidence received or considered and all other submissions by recording or transcript.

c. A statement of all matters officially noticed.

d. All questions and offers of proof, objections and rulings thereon.

e. All proposed findings and exceptions.

f. The proposed decision and order of the administrative law judge.

73.13(15) *Decision of director.* An appeal to the director shall be based on the record of the hearing before the administrative law judge. The decision and order of the director becomes the department's final decision upon receipt by the aggrieved party and shall be delivered by certified mail, return receipt requested, or by personal service.

73.13(16) *Exhausting administrative remedies.* It is not necessary to file an application for a rehearing to exhaust administrative remedies when appealing to the director or the district court as provided in Iowa Code section 17A.19. The aggrieved party to the final decision of the department who has exhausted all administrative remedies may petition for judicial review of that action pursuant to Iowa Code chapter 17A.

73.13(17) *Petition for judicial review.* Any petition for judicial review of a decision and order shall be filed in the district court within 30 days after the decision and order becomes final. A copy of the notice of appeal shall be sent to the department by certified mail, return receipt requested, or by personal service. The address is: Division Director, Division of Health Promotion and Chronic Disease Prevention, Iowa Department of Public Health, Lucas State Office Building, Des Moines, Iowa 50319-0075.

73.13(18) *Benefits after decision.* If a final decision is in favor of the person requesting a hearing and benefits were denied or discontinued, benefits shall begin immediately and continue pending further review should an appeal to district court be filed. If a final decision is in favor of the contract agency, benefits shall be terminated, if still being received, as soon as administratively possible after the issuance of the decision. Benefits denied during an administrative appeal period may not be awarded retroactively following a final decision in favor of a person applying for benefits.

641—73.14(135) State monitoring of contract agencies. The department shall review contract agency operations through use of reports and documents submitted, state-generated data processing reports, and on-site visits for evaluation and technical assistance.

73.14(1) *On-site visits.* Department staff shall visit contract agencies whenever necessary, to review operations and ensure compliance with state and federal regulations.

73.14(2) *Request for written reports.* The department may request written progress reports from contract agencies within specified times.

73.14(3) *Qualifications of department reviewers.* At minimum, one of the persons from the department responsible for reviewing a contract agency shall be a licensed dietitian.

641—73.15(135) Migrant services. To meet the WIC needs of migrant workers within the state, a contract or work agreement shall be maintained with at least one contract migrant service agency within the state to provide or assist in the provision of service to this population.

641—73.16(135) Civil rights. The Iowa WIC program shall operate in compliance with the Equal Employment Opportunity Act of 1973, the Civil Rights Act of 1964, amended 1972, the State of Iowa Civil Rights Act of 1965, the Age Discrimination Act of 1967, Section 504 of Rehabilitation Act of 1973, Iowa Executive Order #15 of 1973, Executive Order #11246 of 1965 as amended by Executive Order #11375 of 1967, and the Americans With Disabilities Act of 1991 to ensure the rights of all individuals under this program.

641—73.17(135) Audits. Each contract agency shall ensure an audit of the WIC program within the agency at least every two years, to be conducted by a private certified public accountant or in accord with applicable Office of Management and Budget Circulars: A-128, Audits of State and Local Governments, and A-133, Audits of Institutions of Higher Education and Other Nonprofit Institutions. Each audit shall cover all unaudited periods through the end of the previous grant year. The department's audit guide shall be followed to ensure an audit that meets federal and state requirements.

641—73.18(135) Reporting. Completion of grant applications, budgets, expenditure reports and written responses to the department's monitoring for the WIC program shall be conducted by contract agencies in compliance with the formats and procedures outlined by the department in the Iowa WIC Policy and Procedure Manual, as specified in the contract entered into by the department and the contract agency.

641—73.19(135) Program violation. Participants or vendors are subject to the sanctions outlined below if determined by contract agency or department staff to be guilty of abusing the program or its regulations.

73.19(1) *Participant violation.* Violations may be detected by contract agency staff, by vendors, or by department staff. Information obtained by the department is forwarded to the contract agency for appropriate action.

a. Whenever possible, the participant is counseled in person concerning the violation. Documentation is maintained according to procedures set forth in the Iowa WIC Policy and Procedure Manual.

b. Participants who violate program regulations are subject to sanction in accordance with the schedule below:

Violation	Points Per Event
1. Attempting to purchase unauthorized brands/types of foods (i.e., incorrect brands of cereal, juices, etc.).	3
2. Attempting to cash food instrument for more than the possible value of the foods listed.	3
3. Not signing the food instrument at the time of purchase.	3
4. Attempting to cash food instruments after the last valid date.	4
5. Redeeming WIC food instruments at an unauthorized vendor.	4
6. Redeeming food instruments before the allowable date.	4
7. Attempting to cash food instruments that were signed prior to redemption at the vendor.	5
8. Redeeming WIC food instruments that were reported as lost or stolen.	5
9. Attempting to purchase more than the quantity of foods specified on the food instrument.	5
10. Verbal abuse or harassment of WIC or vendor employees.	5
11. Threat of physical abuse of WIC or vendor employees.	10
12. Attempting to sell, return, or exchange foods for cash or credit.	10
13. Attempting to purchase unauthorized (non-WIC) foods, such as meat, canned goods, etc.	10
14. Attempting to purchase items that are not food.	10
15. Sale or exchange of WIC food instruments for cash or credit.	10

Violation	Points Per Event
16. Altering a food instrument (e.g., changing last valid date, food item or quantity).	10
17. Attempting to redeem food instrument issued to another participant.	10
18. Receiving more than one set of benefits for the same time period.	10
19. Knowing and deliberate misrepresentation of circumstances to obtain benefits (resulting in a false determination of eligibility).	10
20. Attempting to steal WIC food instruments from a contract agency or participant.	10
21. Physical abuse of WIC contract agency or vendor employees.	10
22. Attempting to pick up food instruments for a child that is not currently in their care.	10

c. The accumulation of 10 violation points within a 12-month period will result in a 2-month disqualification.

The accumulation of 10 additional violation points within a 12-month period following the disqualification will result in a 3-month disqualification. The participant must then reapply for the program and be scheduled for a certification.

d. Fifteen days' notice must be given prior to all disqualifications. In all cases, the participant must be informed of the reason for the disqualification and of the right to appeal the decision through the fair hearing process.

e. A disqualification generally applies to all members of a family who are on the program. The competent professional authority may waive the disqualification for one or more members of the family if it is determined that a serious health risk may result from program disqualification. The reason for this waiver must be documented in the participant's file.

f. The cashing of one or more food instruments at the same time constitutes a single violation. Participants will not be charged with a second violation for minor violations worth 5 or fewer points for subsequent food instruments cashed between the first instance and the receipt of the violation notice if the violation is the same. If a major violation greater than 5 points occurs during this period, the participant will be disqualified. Violations are cumulative.

g. When a participant improperly received benefits as a result of intentionally making a false or misleading statement, or intentionally misrepresenting, concealing, or withholding facts, the department shall collect the cash value of the improperly used food instruments. Collection of overpayment is not required when the department determines it is not cost-effective to do so.

The contract agency shall issue a Statement of Restitution along with the disqualification notice. The statement lists the serial numbers and dollar value of the food instruments for which payment is required.

The participant is required to surrender any unspent food instruments and send payment to the department in check or money order for those food instruments that have been cashed.

h. Each contract agency shall maintain a master list of all participant violation notices, disqualifications, and statements of restitution. The participant's notice of violation must also indicate when it is a second offense.

73.19(2) *Vendor violations.* There are five types of sanctions that are applied to vendors for violations of program regulations: nonpayment of food instruments, issuance of violation points, temporary disqualification, permanent disqualification, and civil money penalties.

a. Nonpayment of food instruments.

(1) As a result of prepayment reviews conducted by the state's bank, improperly completed food items are refused payment and returned to the vendor. Items screened during prepayment are authorized vendor stamp not present or legible in the "Pay to the Order of:" box on face of food instrument, missing signature, price exceeds maximum printed on face of food instrument.

(2) If the violation can be corrected by applying the authorized stamp, obtaining the proper signature, or reducing the price, the item may be resubmitted for payment. Federal banking regulations prohibit a financial instrument from being sent through the federal reserve system more than twice.

If an improperly completed WIC food instrument is received by the state's bank a second time, it is voided and may not be redeposited.

b. Administrative and procedural violation points. Administrative and procedural violations are offenses to the provisions of the WIC vendor agreement that do not rise to the level of fraud against the program or its participants.

These violations are an indication of a vendor's inattention to or disregard of the requirements of a WIC vendor agreement. It is in the department's interest to record and consider these violations when considering whether to continue its contractual relationship with the vendor.

One or more transactions prior to notification of the vendor constitute only one violation if they contain the same error.

The assignment of violation points does not limit the department's right to effect stronger penalties and sanctions in cases in which there is evidence of an intentional or systematic practice of abusing or defrauding the Iowa WIC program.

Violation	Points Per Event
1. Accepting food instrument(s) outside the valid dates of use.	5
2. Depositing food instrument(s) more than 15 days after purchase date.	5
3. Accepting food instrument(s) with no date stamp.	5
4. Refusal to accept valid WIC food instruments from participants.	10
5. Discriminatory treatment of WIC participants, such as requiring WIC participants to use special checkout lanes or provide extra identification.	10
6. Providing to WIC participants incentive items not prior authorized by the department.	10
7. Failure to carry out corrective action plan developed as a result of monitoring visit.	10
8. Failure to reimburse department for potentially overpaid food instrument or provide reasonable explanation for the cost of the food instrument.	5
9. Accepting the return of food purchased with WIC food instruments for cash or credit toward other purchases.	10
10. Failure to use the WIC vendor stamp issued by the Iowa WIC program.	5
11. Issuing "rain checks" or credit in exchange for WIC food instruments.	10
12. Stocking out-of-date, stale, or moldy WIC foods.	10
13. Failure to submit vendor price assessment reports as requested.	10
14. For vendors that have special WIC prices, failure to post WIC prices on the shelf or on the package.	15
15. Cashing food instrument(s) without amount, date of purchase, or participant signature.	15
16. Contacting WIC participants in an attempt to recover funds not paid by WIC.	15
17. Providing false information on the price assessment report.	15
18. Failure to train all employees and ensure their knowledge regarding WIC program procedures set forth in the vendor's current agreement and in the current publication of the Iowa WIC program's vendor instruction booklet.	10
19. Requiring WIC participants to purchase a particular brand when other WIC-approved brands are available.	10
20. Not allowing WIC participants to use discount coupons or promotional specials to reduce the WIC food instrument amount.	10
21. Requiring other cash purchases to redeem WIC food instruments.	15
22. Failure to allow purchase of up to the full amount of WIC foods authorized on the food instrument if such foods are available and desired by the WIC participant.	20

c. One-year disqualification. With an administrative finding of the following violations, the vendor will be disqualified for one year.

(1) Accumulation of 45 or more violation points within a single federal fiscal year of the agreement period.

(2) Allowing purchase of nonapproved and nonsimilar food items in exchange for WIC food instruments.

(3) Failure to provide access to store premises or in any manner to hinder, impede or misinform authorized WIC personnel in the act of conducting an on-site education, monitoring or investigation visit.

(4) Loss of Iowa department of inspections and appeals license.

(5) Submitting for payment a WIC food instrument redeemed by another authorized vendor.

(6) Threatening or verbally abusing WIC participants or authorized WIC program personnel in the conduct of legitimate WIC program transactions.

d. With an administrative finding of the following violations, the vendor will be disqualified from being a WIC vendor for three years.

(1) A pattern of charging WIC participants more than non-WIC customers or charging WIC participants more than the current shelf price.

(2) A pattern of charging for items not received by the WIC participant or for foods provided in excess of those listed on the WIC food instrument.

(3) A pattern of providing credit or nonfood items, except for alcohol, alcoholic beverages, or tobacco products, in exchange for WIC food instruments.

(4) One incidence of allowing the purchase of alcohol, alcoholic beverages, or tobacco products with a WIC food instrument.

(5) A pattern of receiving, transacting, or redeeming WIC food instruments outside authorized channels, including through unauthorized vendors or persons.

(6) A pattern of claiming reimbursement for the sale of a quantity of a specific food item which exceeds the store's documented inventory of that food item for a specified period of time.

(7) Submission for payment of WIC food instruments known by the vendor to have been lost or stolen.

e. With an administrative finding of the following violations, the vendor will be disqualified for six years.

(1) One incidence of buying or selling food instruments for cash (trafficking).

(2) Participating with other individuals including but not limited to WIC employees, vendors, and participants, in systematic efforts to submit false claims for reimbursement of improper WIC food instruments.

(3) One incidence of selling firearms, ammunition, explosives, or controlled substances (as defined in Section 102 of the Controlled Substances Act (21 U.S.C. 802)) in exchange for WIC food instruments.

f. With a conviction in a criminal court of law for trafficking in WIC food instruments or selling firearms, ammunition, explosives, or controlled substances (as defined in Section 102 of the Controlled Substances Act (21 U.S.C. 802)) in exchange for WIC food instruments, the vendor will be permanently disqualified from the Iowa WIC program. The department may impose a civil money penalty (CMP) in lieu of a disqualification when it determines, in its sole discretion, that:

(1) Disqualification of the vendor would result in inadequate participant access; or

(2) The vendor had, at the time of the violation, an effective policy and program in effect to prevent trafficking; and the ownership of the vendor was not aware of, did not approve of, and was not involved in the conduct of the violation.

g. The following items do not have a point value, but shall result in or extend a disqualification period:

(1) Failure to return WIC vendor stamp(s) to the WIC program within 10 days of effective date of disqualification, or expiration of agreement following denial of subsequent application, shall result in a 30-day extension of a disqualification period.

(2) For each month in which a vendor accepts WIC food instruments during a disqualification period, the disqualification period shall be extended by 30 days.

h. The above sanctions notwithstanding, the state of Iowa reserves the right to seek civil and criminal prosecution of WIC vendors for any and all instances of dealing in stolen or lost food instruments, trading cash and other inappropriate commodities for food instruments, or cases in which there exists evidence of a clear business practice to improperly obtain WIC funds, or other practices meeting the definition of fraud as defined in 7 CFR 246 or the Iowa Code.

i. A vendor shall not be entitled to receive any compensation for revenues lost as a result of any temporary or permanent disqualification.

j. A minimum of 15 days' notice is provided prior to all disqualifications, except for permanent disqualifications assessed under paragraph 73.19(2)*"f,"* which are effective on the date of receipt of the notice of administrative action. When the department determines that an offense has occurred, a disqualification letter with supporting documentation is prepared for the WIC director's signature. The disqualification letter identifies the specific offenses that the vendor is charged with and the procedures for filing an appeal.

k. The department is responsible for issuing all warning and disqualification letters. Contract agencies are informed of all vendor correspondence regarding violations. In situations where participant violations are also involved, the contract agency is responsible for follow-up, as detailed in subrule 73.19(1).

l. Federal food stamp regulations require automatic disqualification from the food stamp program for vendors disqualified by the WIC program for certain types of violations. When a vendor is disqualified from the WIC program, the disqualification letter to the vendor will include the following statement: "This disqualification from WIC may result in disqualification as a retailer in the food stamp program. Such disqualification may not be subject to administrative or judicial review under the food stamp program." For all vendor disqualifications from the WIC program, notice will be sent to the United States Department of Agriculture for appropriate action.

m. The department shall disqualify a vendor who has been disqualified from the food stamp program. The disqualification shall be for the same length of time as the food stamp program disqualification, may begin at a later date than the food stamp program disqualification, and shall not be subject to administrative or judicial review under the WIC program. If the department determines that disqualification of a vendor would result in inadequate participant access, it will impose a civil money penalty (CMP) in lieu of disqualification.

n. Civil money penalties.

(1) When the department determines that a civil money penalty (CMP) shall be imposed in lieu of disqualification for reasons specified under paragraph 73.19(2)*"f"* or 73.19(2)*"m,"* it shall use the civil money penalty formula in accordance with Title 7 CFR Subpart 246.12(k)(1)(x) to determine the CMP.

(2) If a vendor does not pay, only partially pays, or fails to timely pay a CMP, the department will disqualify the vendor for the length of the disqualification corresponding to the violation for which the CMP was assessed. "Failure to timely pay a CMP" includes the failure to pay a CMP in accordance with an installment plan approved by the department.

(3) Money received by the state WIC agency as a result of civil money penalties or fines assessed against a vendor and any interest charged in the collection of these penalties and fines shall be considered as program income.

641—73.20(135) Data processing. All contract agencies shall comply with the instructions outlined in the Iowa WIC Policy and Procedure Manual for use of the automated data processing system in provision of WIC food instruments and monitoring of WIC services. No contract agency is exempted from adherence to any portion of these instructions.

641—73.21(135) Outreach. Outreach efforts within the Iowa WIC program shall be directed toward extension of services to the neediest Iowans of high priority by reason of their WIC status (see 7 CFR 246.1(d)3). The department and contract agencies shall share responsibility for the conduct of outreach efforts.

73.21(1) *Contract agency responsibilities.* Contract agencies shall conduct any or all of the following outreach activities annually:

a. Employ outreach worker(s).

b. Submit for publication a minimum of two newspaper articles on WIC in the local community.

c. Distribute WIC brochures to numerous community organizations and offices.

d. Hold informational meetings for county social service departments, including food stamp program staff, drug/alcohol abuse counseling services, family investment program staff, and child abuse staff; and for public health nurse offices, physician offices, maternal and child health programs, Head Start programs, dental programs, family planning programs, nutrition professional groups, nursing professional groups, extension services, parent-teacher and other community organizations.

73.21(2) Reserved.

641—73.22(135) Caseload management. The statewide caseload (number of participants) shall be managed by the department in accord with funding limitations and federal regulations or directives. The federally established priority categories of participant shall be followed when limitation of services is necessary in accord with 7 CFR 246.7(d)3. In addition the following rules shall apply:

73.22(1) A contract agency shall maintain a waiting list only when the department determines that sufficient funds are not available to meet demand.

73.22(2) When a waiting list has been authorized, contract agencies shall certify applicants of potential highest priority first (e.g., women and infants) and potential lower priority second (children). Within these priority groups, applicants shall be offered certification appointments in the order of placement on the list.

73.22(3) When insufficient funds are available to serve all priority categories, the department shall provide instructions to contract agencies regarding which priority categories may continue to be certified.

73.22(4) When necessitated by federal funding restrictions, the department reserves the right to terminate or temporarily suspend benefits for categories of participants prior to the end of their certification period. Each participant shall be advised in writing 15 days before the effective date of the reasons for the action and of the right to a fair hearing.

641—73.23(135) Grant application procedures for contract agencies. Private, nonprofit or public agencies wishing to provide WIC services shall file a letter of intent to make application to the department no later than April 1 of the competitive year. Applications shall be to administer WIC services for a specified project period, as defined in the request for proposal, with an annual continuation application. The contract period shall be from October 1 to September 30 annually. All materials submitted as part of the grant application are considered public records in accordance with Iowa Code chapter 22, after a notice of award is made by the department. Notification of the availability of funds and grant application procedures will be provided in accordance with the department rules found in 641—Chapter 176.

Contract agencies are selected on the basis of the grant applications submitted to the department. The department will consider only applications from private nonprofit or public agencies. In the case of competing applications, the contract will be awarded to the agency that scores the highest number of points in the review. Copies of review criteria are available from: Chief, Bureau of Nutrition and Health Promotion, Iowa Department of Public Health, Lucas State Office Building, Des Moines, Iowa 50319-0075, (515)281-4913.

641—73.24(135) Participant rights. The special supplemental nutrition program for women, infants and children shall be open to all eligible persons regardless of race, color, sex, creed, age, mental/physical handicap or national origin. An applicant or participant may appeal any decision made by the contract agency or department regarding the applicant's or participant's eligibility for the program.

These rules are intended to implement federal law 42 U.S.C. Section 1786, and Iowa Code sections 10A.202(1)*"h"* and 135.11(1).

[Filed emergency 11/17/82—published 12/8/82, effective 12/8/82]

[Filed emergency 5/16/83—published 6/8/83, effective 5/31/83]

[Filed 11/18/83, Notice 8/17/83—published 12/7/83, effective 1/13/84]
[Filed emergency 7/27/84—published 8/15/84, effective 7/27/84]
[Filed emergency 1/10/85 after Notice 8/15/84—published 1/30/85, effective 1/10/85]
[Filed 5/17/85, Notice 2/13/85—published 6/5/85, effective 7/11/85]
[Filed emergency 5/30/85—published 6/19/85, effective 5/30/85]
[Filed emergency 7/1/86—published 7/16/86, effective 7/1/86][1]
[Filed emergency 9/19/86—published 10/8/86, effective 9/19/86]
[Filed emergency 7/10/87—published 7/29/87, effective 7/10/87]
[Filed 2/4/88, Notice 11/18/87—published 2/24/88, effective 3/30/88][2]
[Filed emergency 5/13/88—published 6/1/88, effective 6/1/88]
[Filed 9/15/89, Notice 7/12/89—published 10/4/89, effective 11/8/89]
[Filed 5/11/90, Notice 2/7/90—published 5/30/90, effective 7/4/90]
[Filed 11/9/90, Notice 8/22/90—published 11/28/90, effective 1/2/91]
[Filed 3/13/92, Notice 1/22/92—published 4/1/92, effective 5/6/92]
[Filed 3/13/92, Notice 2/5/92—published 4/1/92, effective 5/6/92]
[Filed 1/14/94, Notice 12/8/93—published 2/2/94, effective 3/9/94]
[Filed 1/11/96, Notice 11/8/95—published 1/31/96, effective 3/6/96]
[Filed 9/16/96, Notice 7/31/96—published 10/9/96, effective 11/13/96]
[Filed 1/9/97, Notice 12/4/96—published 1/29/97, effective 3/5/97]
[Filed emergency 11/12/99 after Notice 6/16/99—published 12/1/99, effective 11/12/99]
[Filed 4/13/00, Notice 1/26/00—published 5/3/00, effective 6/7/00]
[Filed 5/10/01, Notice 4/4/01—published 5/30/01, effective 7/4/01]
[Filed 7/16/04, Notice 5/26/04—published 8/4/04, effective 9/8/04]
[Filed 7/13/05, Notice 6/8/05—published 8/3/05, effective 9/7/05]
[Filed 1/10/08, Notice 11/21/07—published 1/30/08, effective 3/5/08]
[Filed ARC 7984B (Notice ARC 7669B, IAB 4/8/09; Amended Notice ARC 7798B, IAB 5/20/09), IAB 7/29/09, effective 9/2/09]

[1] See IAB, Inspections and Appeals Department.
[2] Effective date delayed 70 days by the Administrative Rules Review Committee at its March 8, 1988, meeting.

CHAPTER 74
FAMILY PLANNING SERVICES
[Prior to 7/29/87, Health Department[470] Ch 74]

641—74.1(135) Program explanation. The Iowa department of public health is a designated agency to operate the family planning program pursuant to an agreement with the federal government. Congress authorized grants to assist in the establishment and operation of family planning projects which offer a broad range of acceptable and effective family planning methods, including natural family planning, infertility services and services to adolescents. The majority of the funding available is from the Title X, family planning services grant, administered by the United States Department of Health and Human Services (DHHS).

The purpose of the program is to promote the health of persons of reproductive age and families by providing access to family planning and reproductive health promotion services.

The department, bureau of family health, enters into contracts with selected private and public agencies within the department family planning service area for the provision of family planning services. A description of the department family planning service area can be obtained from the Chief, Bureau of Family Health, Department of Public Health, Lucas State Office Building, Des Moines, Iowa 50319-0075.

The maternal and child health (MCH) advisory council assists in the development of the state plan for MCH, including children with special health care needs and family planning. The advisory council assists with the assessment of need, prioritization of services, establishment of objectives, and encouragement of public support for MCH and family planning programs. In addition, the advisory council advises the director regarding health and nutrition services for women and children, supports the development of special projects and conferences and advocates for health and nutrition services for women and children. The director appoints the council membership. Membership shall include parents of and service providers for children with special health care needs. Council membership shall also include the chairs, or designees, of the department's advisory committee for perinatal guidelines and the birth defects advisory committee to ensure coordination of each committee's respective issues and priorities. The chair of the family services grantee committee or the designee of the chair may serve as an ex officio member of the council.

641—74.2(135) Adoption by reference. Federal regulations found at 42 CFR Subpart A, Part 59, and the Program Guidelines for Project Grants for Family Planning Services shall be the regulations governing the Iowa family planning program and are incorporated by reference herein.

Copies of the federal regulations adopted by reference are available from the Chief, Bureau of Family Health, Department of Public Health, Lucas State Office Building, Des Moines, Iowa 50319-0075.

641—74.3(135) Rule coverage. These rules cover the agencies that have a contract with the department to provide family planning services and receive funds from the department for that purpose.

641—74.4(135) Definitions.

"Applicant" means a private nonprofit or public agency that seeks a contract with the department to provide family planning services and receives funds from the department for that purpose.

"Client" means an individual who receives family planning services through a contract agency.

"Contract agency or contractor" means a private nonprofit or public agency within the department family planning service area that has a contract with the department to provide family planning services and receives funds from the department for that purpose.

"Department" means the Iowa department of public health.

"DHHS" means the United States Department of Health and Human Services.

"DIA" means the Iowa department of inspections and appeals.

"Director" means the director of the Iowa department of public health.

"Family" means a group of two or more persons related by birth, marriage, or adoption or residing together. A pregnant woman is considered as two individuals when calculating the number of individuals

in the family. If a pregnant woman is expecting multiple births, the family size is increased by the number expected in the multiple birth.

"Family planning" means the promotion of reproductive and family health by the prevention of and planning for pregnancy, and reproductive health education.

"Health education" means services provided by a health professional to include teaching about normal anatomy and physiology, contraception, risk assessment, safety and injury prevention, signs or symptoms indicating need for medical care, and other anticipatory guidance topics.

"Health professional" means an individual who is licensed to provide health care or social services within their scope of practice.

"Health services" means services provided by family planning contract agencies.

"Medicaid" means the Medicaid program authorized by Title XIX of the Social Security Act and funded through the Iowa department of human services from DHHS.

"OMB" means the United States Department of the Treasury, Office of Management and Budget.

"Performance standards" means criteria or indicators of the quality of service provided or the capability of an agency to provide services in a cost-effective or efficient manner as defined in "Iowa Department of Public Health Family Planning Manual" and the federal regulations found at 42 CFR Subpart A, Part 59, and the Program Guidelines for Project Grants for Family Planning Services.

"Title X" means the federal requirements contained in 42 CFR Subpart A, Part 59, and the Program Guidelines for Project Grants for Family Planning Services.

"Title XX" means the combined federal and state dollars in the Social Services Block Grant allocated to pay for family planning services.

641—74.5(135) Grant application procedures for contract agencies. Notification of the availability of funds and grant application procedures will be provided in accordance with the department rules found in 641—Chapter 176. Eligible applicants include only private nonprofit or public agencies. Private nonprofit or public agencies seeking to provide Title X family planning center services shall file a letter of intent to make application to the department no later than April 1 of the competitive year. The request for proposals shall identify the project period and the contract period. Contract agencies are selected on the basis of the grant applications submitted to the department. In the case of competing applications, the contract will be awarded to the applicant that scores the highest number of points in the review. Copies of review criteria are available from the Chief, Bureau of Family Health, Department of Public Health, Lucas State Office Building, Des Moines, Iowa 50319-0075. All materials submitted as part of the grant application are considered public records in accordance with Iowa Code chapter 22, after a notice of award is made by the department.

641—74.6(135) Funding levels for contract agencies. The amount of funds available to each contract agency on an annual basis shall be determined by the department using a methodology based upon dollars available, number of clients enrolled, and selected needs criteria.

641—74.7(135) Agency performance. Contract agencies are required to provide services in accordance with these rules.

74.7(1) *Performance standards.* The department shall establish performance standards that contract agencies shall meet in the provision of public health services in addition to meeting all federal requirements. The performance standards for community-based agencies are published in the document "Iowa Department of Public Health Family Planning Manual." Copies of the performance standards are available from the Chief, Bureau of Family Health, Department of Public Health, Lucas State Office Building, Des Moines, Iowa 50319-0075. Contract agencies that do not meet the performance standards shall not be eligible for continued funding as a family planning agency unless the contract agency has secured an exception.

74.7(2) *Contract agency review.* The state agency shall review contract agency operations through use of reports and documents submitted, state-generated data reports, chart audits, on-site and clinic visits for evaluation and technical assistance.

74.7(3) *Exception.* An agency that does not meet a performance standard or fails to meet action plans as approved by the department may be granted an exception for up to one year in order to improve performance. Such an exception must be requested in writing. If granted, the approval for the exception will include the conditions necessary for the successful completion of the standard, a time frame, and additional reporting requirements. The procedures for applying for and approving an exception are outlined in the "Iowa Department of Public Health Family Planning Manual."

641—74.8(135) Reporting. Contract agencies shall complete grant applications, a budget, expenditure reports, an annual progress report, a family planning annual report, and data forms in compliance with the terms of the contract.

641—74.9(135) Fiscal management. All contract agencies are required to meet certain fiscal management policies.

74.9(1) *Last pay.* Family planning grant funds are considered last pay. Title XIX, Title XX and other third parties are to be billed first if the client is covered by those sources.

74.9(2) *Program income.* Program income means gross income earned by the contractor from activities in which part or all of the cost is either borne as a direct cost by a grant or counted as a direct cost toward providing services. It includes but is not limited to such income in the form of Title XIX and Title XX fees for services, third-party reimbursements, client fees, and proceeds from sales of tangible personal or real property.

Program income shall be used for allowable costs of the project. Program income shall be used prior to the use of funds received from the department. Excess program income may be retained to establish a three-month operating capital. Program income shall be used during the current fiscal year or the following fiscal year. Five percent of unobligated program income may be used by the contract agency for special purposes or projects provided such use furthers the mission of the family planning program and does not violate state rules or federal regulations governing the program.

74.9(3) *Advances.* A contract agency may request an advance up to one-sixth of its contract at the beginning of a contract year. The amount of any advance shall be deducted prior to the end of the fiscal year.

74.9(4) *Subcontracts.* Contract agencies may subcontract a portion of the project activity to another entity provided such subcontract is approved by the department. Subcontract agencies must follow the same rules, procedures, and policies as required of the contract agency by these rules and contract with the department. The contract agency is responsible for ensuring the compliance of the subcontract agency. Subcontract agencies may not subcontract these project activities with other entities.

641—74.10(135) Audits. Every two years, each contract agency shall undergo financial audit of the family planning program. The audit shall be conducted in compliance with OMB Circular A-133, Audits of States, Local Governments, and Non-Profit Organizations. Each audit shall cover all unaudited periods through the end of the previous grant year. The department's audit guide should be followed to ensure an audit which meets federal and state requirements.

641—74.11(135) Denial, suspension, revocation, or reduction of contracts with contract agencies. The department may deny, suspend, revoke, or reduce contracts with contract agencies in accord with applicable federal regulations or contractual relationships. Notice of such action shall be in writing.

641—74.12(135) Right to appeal—contract agency. Contract agencies may appeal denial of a contract or the suspension, revocation or reduction of an existing contract.

74.12(1) *Appeal.* The appeal shall be made in writing to the department within ten days of receipt of notification of the adverse action. Notice is to be addressed to the Director, Division of Community Health, Department of Public Health, Lucas State Office Building, Des Moines, Iowa 50319-0075.

74.12(2) *Contested case.* Upon receipt of an appeal that meets contested case status, the appeal shall be forwarded within five working days to the DIA pursuant to the rules adopted by the DIA regarding

the transmission of contested cases. The information upon which the adverse action is based and any additional information which may be provided by the aggrieved party shall also be provided to the DIA.

74.12(3) *Hearing.* Parties shall receive notice of the hearing in advance. The administrative law judge shall schedule the time, place and date of the hearing so that the hearing is held as expeditiously as possible. The hearing shall be conducted according to the procedural rules of the DIA found in 481—Chapter 10, Iowa Administrative Code.

74.12(4) *Decision of administrative law judge.* The administrative law judge's decision shall be issued within 60 days from the date of request for hearing. When the administrative law judge makes a proposed decision and order, it shall be served by certified mail, return receipt requested, or delivered by personal service. That proposed decision and order then becomes the department's final decision without further proceedings ten days after it is received by the aggrieved party unless an appeal to the director is taken as provided in subrule 76.17(5).

74.12(5) *Appeal to the director.* Any appeal to the director for review of the proposed decision and order of the administrative law judge shall be filed in writing and mailed to the director by certified mail, return receipt requested, or delivered by personal service within ten days after the receipt of the administrative law judge's proposed decision and order by the aggrieved party. A copy of the appeal shall also be mailed to the administrative law judge. Any request for an appeal shall state the reason for appeal.

74.12(6) *Record of hearing.* Upon receipt of an appeal request, the administrative law judge shall prepare the record of the hearing for submission to the director. The record shall include the following:

a. All pleadings, motions and rules.

b. All evidence received or considered and all other submissions by recording or transcript.

c. A statement of all matters officially noticed.

d. All questions and offers of proof, objections and rulings thereon.

e. All proposed findings and exceptions.

f. The proposed decision and order of the administrative law judge.

74.12(7) *Decision of director.* An appeal to the director shall be based on the record made at the hearing. The decision and order of the director becomes the department's final decision upon receipt by the aggrieved party and shall be delivered by certified mail, return receipt requested, or by personal service.

74.12(8) *Exhausting administrative remedies.* It is not necessary to file an application for a rehearing to exhaust administrative remedies when appealing to the director or the district court as provided in Iowa Code section 17A.19. The aggrieved party to the final decision of the department who has exhausted all administrative remedies may petition for judicial review of that action pursuant to Iowa Code chapter 17A. Petition for judicial review must be filed within 30 days after decision becomes final.

These rules are intended to implement Iowa Code section 135.11.

[Filed 6/14/83, Notice 4/27/83—published 7/6/83, effective 8/10/83]
[Filed emergency 7/1/86—published 7/16/86, effective 7/1/86][1]
[Filed emergency 9/19/86—published 10/8/86, effective 9/19/86]
[Filed emergency 7/10/87—published 7/29/87, effective 7/10/87]
[Filed 1/11/96, Notice 11/8/95—published 1/31/96, effective 3/6/96]
[Filed 7/18/02, Notice 5/29/02—published 8/7/02, effective 9/11/02]

[1] See IAB, Inspections and Appeals Department.

CHAPTER 75
STATEWIDE OBSTETRICAL AND NEWBORN INDIGENT PATIENT CARE PROGRAM

641—75.1(255A) Definitions.

"Applicant" means a person for whom assistance under this program is being requested.

"Delivery" means that the delivery occurs after 20 weeks gestation.

"Director" means the administrator of a maternal health center or other designated agency.

"Family" means a group of two or more persons related by birth, marriage, or adoption who reside together or a unit of one who is an unrelated individual not living with any relatives. The unborn fetus will be counted as a family member.

"Nonquota case" means a patient who is provided obstetrical or newborn care services at the University of Iowa Hospitals and Clinics under the indigent nonquota obstetrical care program established pursuant to Iowa Code chapter 255 and referenced in Iowa Code section 255A.2.

"Obstetrical and newborn care services" means those types of services as recognized by the latest editions of The American College of Obstetricians and Gynecologists, "Standards for Obstetric-Gynecologic Services" and The American Academy of Pediatrics, "Standards and Recommendations for Hospital Care of Newborn Infants."

"Poverty level" means poverty income guidelines established by the United States Department of Health and Human Services.

"Program" means the obstetrical and newborn indigent patient care program for quota cases.

"Provider" means a licensed hospital or a licensed physician who agrees to service eligible patients.

"Quota case" means a patient who is provided obstetrical or newborn care by a licensed hospital or physician under the obstetrical indigent patient quota program established pursuant to Iowa Code section 255A.4.

"Resident" means the individual is a legal resident of the state and resides in one of the designated 90 counties.

"Spenddown" means the process by which an applicant obligates income for allowable medical expenses to reduce income to a qualifying level. The medical expenses used for spenddown cannot be paid for with funds from this program.

"Spenddown interval" means one month for delivery services and six months for antepartum and delivery services.

641—75.2(255A) Covered services. The following obstetrical and newborn care services may be provided through the obstetrical indigent patient care program:

1. Antepartum and postpartum care except where patient qualifies for antepartum and postpartum care provided by the department of public health, maternal and child health care program.
2. Normal delivery.
3. Cesarean section.
4. Newborn hospital care.
5. Sick newborns who qualify as a quota case will be covered until the patient is stabilized and transferred to University of Iowa Hospitals and Clinics, where the patient may be eligible to receive care as a county quota indigent patient pursuant to Iowa Code chapter 255.
6. Inpatient transportation from one hospital to another when authorized by a medical provider.
7. One outpatient visit for false labor.
8. Excluded services for quota cases will include but not be limited to elective abortion, elective hysterectomy, circumcision, nonobstetric related procedures and services.

641—75.3(255A) Quota assignment. The department of public health shall establish the quota annually for each county. The formula used shall be based upon, but not limited to, the following criteria:

1. Dollars available to the program.
2. Average number of births for the most recent three-year period for each county.

3. Per capita income for each county.

641—75.4(255A) Eligibility criteria. The certification process to determine eligibility for services under this program will include the following requirements:

75.4(1) *Income.*

a. Income guidelines will be set at 185 percent of the poverty income guidelines published by the United States Department of Health and Human Services. State income guidelines will be adjusted following any change in Department of Health and Human Services guidelines.

b. Income information will be provided by the applicant, who will attest in writing to the accuracy of the information contained on the application. The director may request verification of income.

c. All earned and unearned income of family members as defined by DHHS poverty guidelines will be used in calculating the applicant's gross income for purposes of determining initial and continued eligibility.

d. Income will be estimated prospectively as follows:

(1) Annual income will be estimated based on the applicant's income for the past three months unless the applicant's income will be changing or has changed, or

(2) In the case of self-employed families the past year's income tax return will be used in estimating annual income unless a substantial change has occurred.

(3) Terminated income will not be considered.

e. An applicant for obstetric services under this program whose income falls between 185 percent and 300 percent of the poverty level guidelines may qualify through spenddown of medical expenses of all family members as follows:

(1) The applicant must provide copies of medical bills or a statement from the providers of projected medical expenses.

(2) Medical expenses which can be used to meet spenddown are as follows:

1. Health insurance premiums, deductibles, or coinsurance charges.

2. Medical and dental expenses as defined by the Internal Revenue Service.

(3) In order to qualify with spenddown, the amount of spenddown, adjusted by one-twelfth, must be equal to or less than the projected and actual medical expenses.

75.4(2) *Resources.*

a. The resource limitation for an applicant will be $10,000 per household.

b. The following are countable resources:

(1) Unobligated cash.

(2) Savings accounts.

(3) Stocks, bonds, certificates of deposit, excluding Internal Revenue Service defined retirement plans.

c. Resource information will be provided by the applicant, who will attest in writing to the accuracy of the information contained on the application. The director may request verification of resources.

75.4(3) *Noneligibility for Title XIX or medically needy without spenddown.* In order to be eligible, the applicant must not be eligible for services under Title XIX or the medically needy program without a spenddown.

75.4(4) *Residency.* The applicant for this program must be a legal resident of Iowa currently living in any county except Clinton, Cedar, Scott, Muscatine, Louisa, Washington, Iowa, Johnson, or Keokuk.

641—75.5(255A) Application procedures.

75.5(1) A person desiring obstetrical and newborn care under this program, or the parent or guardian of a minor desiring such care, may apply to the director of the maternal health center serving the person's county of residence at any time between confirmation of the pregnancy and not later than 60 days after delivery. If there is no maternal health center covering that county, the department will designate an agency.

75.5(2) The applicant will provide the following information to be considered for eligibility under this program:

a. Income and resource information on an application form.

b. Written verification obtained from the department of human services certifying that the applicant is not eligible for Title XIX or the medically needy program without a spenddown. The applicant will submit this copy within 60 days of applying with the director. To meet this 60-day deadline, the applicant will need to apply with the department of human services before or immediately after contacting the director.

75.5(3) Assignment of quotas shall be on a first-come, first-served basis based upon application date.

75.5(4) The director will provide written notification to the applicant regarding determination of eligibility or noneligibility and applicant's right to appeal a denial.

75.5(5) After an applicant has been determined to be eligible, the patient or provider will report any changes in eligibility or status of pregnancy to the director within 10 days from the date the change occurred.

75.5(6) Standardized application, determination of eligibility, and certification forms will be furnished by the department of public health to the directors.

75.5(7) Copies of appropriate certification forms will be mailed by the director to the department of public health as follows:

a. In counties covered by the department of public health's maternal and child health program, certification forms will be sent at 26 weeks or more gestation.

b. In counties not covered by maternal and child health programs, certification forms will be sent upon determination of eligibility for patients whose antepartum care will also be paid through the program.

75.5(8) Receipt of a certification form for a quota patient by the department of public health shall be considered the point in time when the quota has been used.

75.5(9) A woman who resides in a county which exceeds the patient quota allocated for the county, and who meets eligibility under rule 75.4(255A) shall be served at the University of Iowa Hospitals and Clinics pursuant to Iowa Code section 255.16. A woman who resides in a county with available quota and who meets eligibility under rule 75.4(255A) may be served at the University of Iowa Hospitals and Clinics pursuant to Iowa Code section 255.16.

75.5(10) Maternal health center directors shall negotiate 28E agreements with general relief directors for the purpose of coordinating application and eligibility services for obstetric patients under Iowa Code chapter 255.

641—75.6(255A) Reimbursement of providers.

75.6(1) The University of Iowa Hospitals and Clinics and other hospitals will submit their billings on the UB 82, uniform hospital billing form, and physicians will submit their billings on the Health Care Financing Administration form HCFA 1500. Forms will be furnished by the providers.

75.6(2) Providers will submit bills after delivery but not more than 60 days after the delivery or after determination of eligibility, whichever occurs later, to the department of public health.

75.6(3) Reimbursement for physicians and hospitals will be based upon the Title XIX rates. Bills will be adjusted accordingly by the department of public health and forwarded to the department of revenue and finance for payment.

75.6(4) Providers may be reimbursed for antepartum care prior to the patient becoming ineligible, as long as the patient is counted as a quota case.

75.6(5) On an annual basis the department of public health will furnish participating physicians with a list of reimbursable procedure codes and maximum rate.

75.6(6) The obstetrical indigent care fund is last pay. Private insurance shall be billed first.

75.6(7) All providers of services to quota obstetrical and newborn patients shall agree to accept as full payment the reimbursements allowable under the medical assistance program established pursuant to Iowa Code chapter 249A, up to a maximum of medical assistance's average reimbursement for the most

recent fiscal year. When the medical assistance reimbursement methodologies change, the maximum reimbursement may be based upon projection.

75.6(8) The obstetrical and newborn indigent program will pay, out of a set-aside fund, for certain cases that exceed the current year's maximum reimbursement rate. Cases that can be paid out of this fund are:

a. Allowable physician and hospital costs associated with DRGs 370, 371, 372, 374, 375 for the woman. Costs associated with DRGs 383, 384 will be covered if followed by a qualifying delivery event.

b. Allowable physician and hospital costs for the newborn associated with DRGs 385, 385.1, 389, 390.

c. Care provided to newborns under DRGs 386, 386.1, 387, 387.1, 388, 388.1, 389.1, 390.1 are defined under rule 75.2(255A) as being outside the scope of this program. These services could, however, be covered by Iowa Code chapter 255 or medically needy programs.

d. Physicians who provide obstetrical or newborn care at the University of Iowa Hospitals and Clinics are not entitled to receive any compensation for the provision of such care to persons certified as eligible under this program.

75.6(9) In all other cases, the maximum reimbursement level will apply. If the total reimbursable charges exceed the maximum reimbursement level, reimbursement to providers will be prorated based upon allowable reimbursement amounts.

75.6(10) Certifications for quota cases received by June 30 will have medical assistance's average reimbursement and the 10 percent fund encumbered.

641—75.7(255A) Reassignment of county quotas.

75.7(1) Unused quota numbers will be assigned by the department of public health after March 31 of each year to counties according to receipt of request on a case-by-case, first-come basis.

75.7(2) Request for additional quotas cannot be made until all quotas have been used in a given county.

75.7(3) Requests for additional quotas may be submitted by directors and must be based on pending applications. Requests will be made on forms provided by the department of public health designed to provide necessary information regarding pending applications.

641—75.8(255A) Appeals and fair hearings.

75.8(1) *Right of appeal.* An applicant shall have the right to appeal whenever a decision of the director or the state program results in the individual's denial of eligibility for the program or denial as a quota case. No appeal can be filed for denial as a quota case, if there are no quotas available. Quotas would not be available if already assigned or sequestered to cases under appeal. Quotas will only be held when applicant is appealing a change in status.

75.8(2) *Request for reconsideration.* The applicant seeking to appeal shall first request reconsideration by the director of the denial of eligibility for this program or denial as a quota case. The written request shall be made within 15 days from the date the individual received notice of the decision which is the subject of appeal. The written request shall state the adverse decision being appealed and the reasons the applicant believes state standards were not correctly applied. The director shall reconsider the application and make a written determination with notice of right to appeal to the state within 10 days of receipt of the request. If the denial stands, the applicant may appeal to the department of public health.

75.8(3) *Request for hearing.* An appeal is brought by filing an appeal with the Division Director, Division of Family and Community Health, Department of Public Health, Lucas State Office Building, Des Moines, Iowa 50319-0075, within 30 days of the director's final determination in subrule 75.8(2).

75.8(4) *Contested use.* Upon receipt of an appeal that meets contested case status, the appeal shall be forwarded within five working days to the department of inspections and appeals pursuant to the rules adopted by that agency regarding the transmission of contested cases. The information upon which the adverse action is based and any additional information which may be provided by the aggrieved party shall also be provided to the department of inspections and appeals.

75.8(5) *Hearing.* The hearing shall be conducted according to the procedural rules of the department of inspections and appeals found in 481—Chapter 10, Iowa Administrative Code.

75.8(6) *Decision.* A written decision of the hearing officer shall be issued, where possible, within 30 days from the date of the request for a hearing unless the parties agree to a longer period of time. The decision of the hearing shall be served by certified mail, return receipt requested, or delivered by personal service. That proposed decision and order then becomes the department's final agency action without further proceedings 10 days after it is received by the aggrieved party unless an appeal to the director of public health is taken as provided in subrule 75.8(7).

75.8(7) *Appeal to director.* Any appeal to the director of public health for review of the proposed decision and order of the hearing officer shall be filed in writing and mailed to the director of public health by certified mail, return receipt requested, or delivered by personal service within 10 days after the receipt of the hearing officer's proposed decision and order by the aggrieved party. A copy of the appeal shall also be mailed to the hearing officer. Any appeal shall state the reason for appeal.

75.8(8) *Record of hearing.* Upon receipt of an appeal request, the hearing officer shall prepare the record of the hearing for submission to the director of public health. The record shall include the following:

a. All pleadings, motions and rules.

b. All evidence received or considered and all other submissions by recording or transcript.

c. A statement of all matters officially noticed.

d. All questions and offers of proof, objections and rulings thereon.

e. All proposed findings and exceptions.

f. The proposed decision and order of the hearing officer.

75.8(9) *Decision of director.* The decision and order of the director of public health becomes the department's final agency action upon receipt by the aggrieved party and shall be delivered by certified mail, return receipt requested, or by personal service.

75.8(10) *Exhausting administrative remedies.* It is not necessary to file an application for a rehearing to exhaust administrative remedies when appealing to the director of public health or the district court as provided in Iowa Code section 17A.19. The aggrieved party to the final agency action of the department who has exhausted all administrative remedies may petition for judicial review of that action pursuant to Iowa Code chapter 17A.

75.8(11) *Petition for judicial review.* Any petition for judicial review of a decision and order shall be filed in the district court within 30 days after the decision and order becomes final. A copy of the notice of appeal shall be sent to the department by certified mail, return receipt requested, or by personal service. The address is: Division Director, Division of Family and Community Health, Iowa Department of Public Health, Lucas State Office Building, Des Moines, Iowa 50319-0075.

These rules are intended to implement Iowa Code chapter 255A.

[Filed emergency 9/18/86—published 10/8/86, effective 10/1/86]
[Filed 1/23/87, Notice 10/8/86—published 2/11/87, effective 3/18/87]
[Filed emergency 7/10/87—published 7/29/87, effective 7/10/87]
[Filed emergency 9/16/87—published 10/7/87, effective 9/18/87]
[Filed 2/1/88, Notice 10/7/87—published 2/24/88, effective 3/30/88]
[Filed emergency 9/12/91—published 10/2/91, effective 9/12/91]

CHAPTER 76
MATERNAL AND CHILD HEALTH PROGRAM

641—76.1(135) Program overview. The maternal and child health (MCH) programs are operated by the Iowa department of public health as the designated state agency pursuant to an agreement with the federal government. The majority of the funding available is from the Title V MCH block grant, administered by the Health Resources and Services Administration (HRSA) within the United States Department of Health and Human Services (DHHS).

76.1(1) *Purpose.* The purpose of the program is to promote the health of mothers, children, and youth by ensuring or providing access to quality maternal and child health care services (especially for low-income families or families with limited availability of health care services); to reduce infant mortality and the incidence of preventable diseases and handicapping conditions; to increase the number of children appropriately immunized against disease; and to facilitate the development of community-based systems of health care for children, youth and their families. The program provides and promotes family-centered, community-based coordinated care, including care/service coordination for children and youth with special health care needs.

76.1(2) *Services.*

a. The department's bureau of family health (BFH) enters into contracts with selected private nonprofit or public agencies for the assurance of access to prenatal and postpartum care for women, preventive and primary child health care services, and services to children and youth with special health care needs. The types of services provided by these contracts are infrastructure building, population-based services, enabling services, and direct health care services.

b. The department's bureau of oral and health delivery systems (OHDS) collaborates with BFH to develop oral health programs to reduce barriers to oral health care and reduce dental disease through prevention.

c. The children and youth with special health care needs program is administered by the Child Health Specialty Clinics (CHSC) at the University of Iowa. The department contracts with the University of Iowa department of pediatrics' CHSC to provide services for children and youth with special health care needs, including infrastructure building, direct clinical care, care coordination and family support. In accordance with the MCH Title V Block Grant Program administered by DHHS, HRSA, and MCHB, the CHSC shall ensure that public health funds will be used to cover the cost of services only after all other sources of reimbursement have been exhausted.

76.1(3) *MCH advisory council.* The MCH advisory council assists in developing the state plan for MCH, assessing need, prioritizing services, establishing objectives, and encouraging public support for MCH and family planning programs. In addition, the council advises the director regarding health and nutrition services for women and children, supports the development of special projects and conferences and advocates for health and nutrition services for women and children.

[**ARC 0364C**, IAB 10/3/12, effective 11/7/12]

641—76.2(135) Adoption by reference. Federal requirements contained in the Omnibus Reconciliation Act of 1989 (Public Law 101-239), Title V MCH block grant shall be the rules governing the Iowa MCH program and are incorporated by reference herein. Copies of the federal legislation adopted by reference are available from Chief, Bureau of Family Health, Iowa Department of Public Health, Lucas State Office Building, 321 East 12th Street, Des Moines, Iowa 50319-0075.

[**ARC 0364C**, IAB 10/3/12, effective 11/7/12]

641—76.3(135) Rule coverage. These rules cover agencies contracting with the department to provide community-based MCH public health care services and to receive funds from the department for that purpose. The contract agencies conduct essential public health care services directed toward MCH populations consistent with the state's Title V MCH block grant state plan. The state plan is developed and administered collaboratively by BFH and OHDS of the department and CHSC.

[**ARC 0364C**, IAB 10/3/12, effective 11/7/12]

641—76.4(135) Definitions.

"Applicant" means a private nonprofit or public agency that seeks a contract with the department to provide MCH services.

"BFH" means the bureau of family health.

"Care/service coordination" or *"care coordination"* means a comprehensive, family-centered approach that proactively engages and links clients and families to needed health care services, including medical, dental, emotional, behavioral, and health education services. Care coordination encompasses a specific set of activities that promote a client's potential for optimal health and facilitate quality outcomes. By working with the client, family, and other involved disciplines, a care coordinator can promote seamless access and a holistic approach to service provision. Care coordination incorporates the following:

1. Meaningful assessment of needs and concerns.
2. Shared development of care plans.
3. Mobilization of agency and community resources.
4. Continued monitoring and follow-up.
5. Clear and transparent communication.
6. Complete documentation.

"Chairperson" means the chairperson of the MCH advisory council, who has been elected by the majority of the council's members.

"Children and youth with special health care needs" or *"CYSHCN"* means children and youth with chronic physical, developmental, behavioral, or emotional conditions that require health and related services of a type or amount beyond that required by children and youth generally.

"CHSC" means Child Health Specialty Clinics, a statewide program for children and youth with special health care needs authorized under Title V of the Social Security Act.

"Client" means an individual who receives MCH services through a contract agency.

"CMS" means the DHHS Centers for Medicare and Medicaid Services .

"Contract agency" means a private nonprofit or public agency that has a contract with the department to provide MCH services and receives funds from the department for that purpose.

"Core public health functions" means the functions of community health assessment, policy development, and assurance.

1. Assessment: regular collection, analysis, interpretation, and communication of information about health conditions, risks, and assets in a community.
2. Policy development: development, implementation, and evaluation of plans and policies, for public health in general and priority health needs in particular, in a manner that incorporates scientific information and community values and is in accordance with state public health policy.
3. Assurance: ensuring, by encouragement, regulation, or direct action, that programs and interventions that maintain and improve health are carried out.

"Council" or *"MCH advisory council"* means the maternal and child health advisory council.

"Dental home" means a network of individualized care based on risk assessment, which includes oral health education, dental screenings, preventive services, diagnostic services, treatment services, and emergency services.

"Department" means the Iowa department of public health.

"DHHS" means the United States Department of Health and Human Services.

"DIA" means the Iowa department of inspections and appeals.

"Direct health services" means those services generally delivered one-on-one between a health professional and a client in an office or clinic.

"Director" means the director of the Iowa department of public health.

"Enabling services" means services that are designed to help families gain access to health care. Enabling services include but are not limited to outreach, informing/reinforming, and care coordination services to link women, children, and families to needed health care services.

"EPSDT" means the Early and Periodic Screening, Diagnosis, and Treatment program which provides for regular preventive health care services for children aged 0 to 21 as authorized by Title XIX of the Social Security Act.

"Essential public health services" means those activities carried out by public health entities and their contractors that fulfill the core public health functions in the promotion of maternal and child health.

"Family," for the purpose of establishing eligibility, means a group of two or more persons related by birth, marriage or adoption or residing together and functioning as one socioeconomic unit. For the purpose of these rules, a pregnant woman is considered as two individuals when calculating the number of individuals in the family. If a pregnant woman is expecting multiple births, the family size is thereby increased by the number expected in the multiple birth.

"Family planning" means the promotion of reproductive and family health by the prevention of and planning for pregnancy, and reproductive health education.

"Gap filling" means direct health care services supported by Title V staff or resources that are not otherwise accessible in the community.

"HAWK-I" means healthy and well kids in Iowa and is the child health insurance program in Iowa as authorized in Title XXI of the Social Security Act.

"Health care services" means services provided through MCH contract agencies.

"Health education" means services provided by a health professional to include instruction about normal anatomy and physiology, growth and development, safety and injury prevention, signs or symptoms indicating need for medical care, and other anticipatory guidance topics.

"Health professional" means an individual who possesses specialized knowledge in a health or social science field or is licensed to provide health care.

"HRSA" means the Health Resources and Services Administration with the United States Department of Health and Human Services.

"Informing" means the act of advising families of the services available through the EPSDT/Care for Kids program, explaining what to expect at screening, and providing information about health resources in the community.

"Infrastructure building" means activities that support developing and maintaining comprehensive health care service systems. These activities include but are not limited to needs assessment, data collection, strategic planning, working with community partners, developing protocols, quality assurance, and training.

"I-Smile™ program" means the department program implemented through public and private nonprofit agencies and private health care providers to increase access to dental care for children and to ensure a dental home.

"Medicaid" means the Medicaid program authorized by Title XIX of the Social Security Act and funded through the Iowa department of human services from the DHHS.

"Medical home" means a team approach to providing health care that originates in a primary care setting; fosters a partnership among the client, the personal provider, and other health care professionals, and where appropriate, the client's family; utilizes the partnership to access all medical and nonmedical health-related services needed by the client and the client's family to achieve maximum health potential; maintains a centralized, comprehensive record of all health-related services to promote continuity of care; and has all of the characteristics specified in Iowa Code section 135.158.

"MIECHV" means the Maternal, Infant and Early Childhood Home Visiting program.

"Nutrition counseling" means therapeutic nutrition services appropriate to the needs of the client, provided by a licensed dietitian.

"OHDS" means the bureau of oral and health delivery systems.

"OMB" means the United States Department of the Treasury, Office of Management and Budget.

"Oral health counseling" means services to assess oral health status and to provide education appropriate to the needs of the client and referral for additional care if indicated.

"Oral health education" means information provided by a health professional about dental disease, prevention, and oral hygiene and other anticipatory guidance.

"Parenting education" means educational services for parents or expectant parents provided by health professionals to include care of infants and children, normal development, discipline, and other topics as appropriate.

"Performance measures" means National Performance Measures (NPM) and State Performance Measures (SPM) required through the HRSA, Maternal and Child Health Bureau (MCHB), Title V MCH Block Grant.

"Physician" means a person currently licensed to practice under Iowa Code chapter 148.

"Population-based services" means services that include preventive personal health care services for groups of individuals (rather than one-on-one). Payer status of the individuals is not assessed, and services are not billed. Population-based services may be provided to an entire community, county, or region. Examples include but are not limited to mass immunizations, classroom oral health education, and the use of media for health promotion and education.

"Prenatal and postpartum care" means those types of services as recognized by the American College of Obstetricians and Gynecologists.

"Presumptive eligibility determination" means temporary Medicaid eligibility that pays for medical services while a formal Medicaid decision is being made by the Iowa department of human services. For pregnant women, presumptive eligibility determination is based only on a woman's statement regarding her family income. A qualified provider can presume that the pregnant women who are Iowa residents will be eligible for Medicaid. Qualified providers can grant Medicaid coverage to these women to pay for the cost of ambulatory prenatal care. Presumptive Medicaid eligibility begins with the date the qualified provider determines the woman is eligible and continues through the last day of the next month.

"Program income" means gross income earned by the MCH contract agency resulting from activities related to fulfilling the terms of the contract. "Program income" includes but is not limited to such income as fees for services, third-party reimbursements, and proceeds from sales of tangible, personal or real property.

"Psychosocial services" means screening activities that include social assessment and assisting with a family's additional needs for support and referral.

"Title V" means Title V of the Social Security Act and the federal requirements contained in the Omnibus Reconciliation Act of 1989 (Public Law 101-239) which address the MCH and CYSHCN programs.

"Title X" means the program authorized in the federal regulations found in 42 CFR Subpart A, Part 59, published in the Federal Register on June 3, 1980, and the Program Guidelines for Project Grants for Family Planning Services.

"Title XIX" means the Medicaid program authorized in the Social Security Act and funded through the Iowa department of human services from the DHHS.

"Title XXI" means the child health insurance program authorized in the Social Security Act and implemented in Iowa as the HAWK-I program as administered by the Iowa department of human services.

"Well-child health care" means those types of services as recognized by the latest edition of the American Academy of Pediatrics, Guidelines for Health Supervision.

"WIC" means the Special Supplemental Nutrition Program for Women, Infants and Children, funded through the department from the United States Department of Agriculture.

[**ARC 0364C**, IAB 10/3/12, effective 11/7/12]

641—76.5(135) MCH services. The following public health services shall be provided by contract agencies:

76.5(1) *Infrastructure building services.*

a. Community assessment activities to identify population-based health conditions, risks, and assets in the community.

b. Analysis of health data to determine community population-based health status, health system utilization and community resources.

c. Methodological support for data collection, analysis and dissemination.

d. Community planning activities to promote family and community health initiatives based on scientific, economic, and political factors.

e. Promotion of regulations, standards, and contracts that protect the public's health and safety.

f. Monitoring and evaluating the effectiveness, accessibility and quality of personal health and population-based services in the community.

g. Supporting innovative initiatives to gain new insights and solutions to family and community health-related needs.

h. Development of state plan and annual report in conjunction with BFH, OHDS, and CHSC.

i. Development of systems for transitioning adolescents with special health care needs to adult services.

j. Building relationships with community partners including health care providers and human service leaders to improve the health care system for women and children.

76.5(2) *Population-based services.*

a. Immunization.

b. Injury prevention.

c. Outreach and health education.

d. Counseling for families who have lost a child to sudden infant death syndrome.

e. Testing for childhood lead poisoning.

f. Support screening and follow-up for congenital and inherited disorders.

g. Oral health survey.

76.5(3) *Enabling services.*

a. Care/service coordination.

b. Informing.

c. Outreach to families and children who do not access a regular and continuous source of health care (medical and dental home).

d. Coordination of local systems of care for improving access to health services.

e. Access to translation services.

f. Access to transportation.

g. Family-to-family support for families who have children and youth with special health care needs.

h. Information and outreach to families applying for the Supplemental Security Income program (Title XVI).

i. Referral.

j. Assistance in establishing a medical and dental home.

k. Presumptive eligibility.

76.5(4) *Direct health services.* Direct health services may be provided to meet identified community needs. The following preventive direct health services may be supported by MCH program funds to the extent the comprehensive community assessment documents that the services are not otherwise available from health professionals within the community. Payment shall be based upon Title XIX rates to the extent that current Title XIX rate information is available to the department. Contract agencies may enter into agreements that reimburse less than the Title XIX rate. Agencies shall not reimburse a provider under sanction by CMS.

a. *Child health.*

(1) Immunizations.

(2) Blood lead testing and analysis.

(3) Nutrition counseling.

(4) Psychosocial services.

(5) Related anticipatory guidance and parenting education.

(6) Developmental testing.

(7) Well-child health care services include routine, ambulatory well-child care.

(8) Home visit provided by nurse or social worker.

(9) Interpretation services.

(10) Transportation services.

b. Maternal health—prenatal and postpartum services.

(1) Risk assessment.

(2) Psychosocial screening assessment and counseling.

(3) Nutrition assessment and counseling.

(4) Health education.

(5) Routine, ambulatory prenatal medical care, postpartum exams, and family planning services.

(6) Home visit provided by a nurse or social worker.

(7) Interpretation services.

(8) Transportation services.

c. Dental health—maternal and child.

(1) Oral screening.

(2) Dental treatment services through referral.

(3) Oral health education and counseling for the prevention of dental disease.

(4) Fluoride varnish application.

(5) Dental sealant application.

(6) Prophylaxis.

(7) Radiographs.

d. Children and youth with special health care needs. Community-based pediatric subspecialty clinic services that are gap filling.

[**ARC 0364C**, IAB 10/3/12, effective 11/7/12]

641—76.6(135) Client eligibility criteria. The certification process to determine eligibility for direct health care under the program shall include the following requirements:

76.6(1) *Age.*

a. Maternal health program—no age restrictions.

b. Child health program—birth through 21 years of age.

c. CYSHCN program—birth through 21 years of age.

76.6(2) *Income.*

a. Income guidelines will be the same as those established for the state's Title XXI program. Guidelines are published annually by DHHS. Department income guidelines will be adjusted following any change in DHHS guidelines.

b. Income information will be provided by the individual.

c. Proof of Title XIX, Title XXI (HAWK-I), or WIC eligibility will automatically serve in lieu of an application.

d. All income of family members as defined by DHHS poverty guidelines will be used in calculating the individual's gross income for purposes of determining initial and continued eligibility.

e. Income will be calculated as follows:

(1) Annual income will be estimated based on the individual's income for the past three months unless the individual's income will be changing or has changed, or

(2) In the case of self-employed families the past year's income tax return (adjusted gross income) will be used in estimating annual income unless a change has occurred.

(3) Terminated income will not be considered.

f. Individuals will be screened for eligibility for Title XIX, Title XXI (HAWK-I), and WIC. If an individual's income falls within the eligibility guidelines for Title XIX, Title XXI (HAWK-I), or WIC, the individual may be referred to the Iowa department of human services or other enrollment source to apply for coverage. Children, youth and pregnant women shall be considered for Title XIX presumptive eligibility.

g. An individual whose income is above the poverty level established by Title XXI and below 300 percent of the federal poverty guidelines will qualify for services on a sliding fee scale, as determined by the local agency's cost for the service. The department provides annual guidelines based on poverty

levels established annually by DHHS. An individual whose income is at or above 300 percent will qualify for services at full fee.

h. Eligibility determinations must be performed at least once annually. Should the individual's circumstances change in a manner which affects third-party coverage or Title XIX/Title XXI eligibility, eligibility determinations shall be completed more frequently.

76.6(3) *Residency.* Individuals must be currently residing in Iowa.

76.6(4) *Pregnancy.* An individual applying for the prenatal program shall have verification of pregnancy by an independent health provider, the maternal health contract agency, a family planning (Title X) agency, or a positive home pregnancy test.

76.6(5) *Children and youth with special health care needs.* An individual applying for CHSC services shall be determined to have a special health care need as defined by the federal MCHB. Care/service coordination, family support or other non-clinic services are provided at no charge to the family. Clinic services are provided without charge to families with adjusted gross incomes below 185 percent of the federal poverty guidelines. Families above this threshold are responsible for payment according to a sliding fee scale based on tax exemptions, adjusted gross income, and extenuating circumstances.

[**ARC 0364C**, IAB 10/3/12, effective 11/7/12]

641—76.7(135) Client application procedures for MCH services.

76.7(1) A person or the parent or guardian of a minor desiring direct health services other than those provided to children and youth with special health care needs may apply to a contract agency using a Health Services Application, Form 470-2927, 470-2927(S), Presumptive Eligibility Health Care Coverage for Children Application, Form 470-4855, 470-4855(S), or the alternate form authorized by the HAWK-I board.

76.7(2) The contract agency shall verify the following information to receive services under the Title V MCH program:

a. The information requested on the application form under "Household Information."

b. Income information for all family members or proof of eligibility for Title XIX (Medicaid), Title XXI (HAWK-I), or WIC.

c. Information about health insurance coverage.

d. The signature of the individual or responsible adult, dated and witnessed.

76.7(3) If an individual has completed a Health Services Application, Form 470-2927, within the last year and the form accurately documents the current financial and family status, the MCH contract agency shall accept a copy of that application and determine eligibility without requiring completion of any other application form.

76.7(4) If an individual indicates on the Health Services Application, Form 470-2927, that the individual also wishes to apply for WIC or Medicaid or HAWK-I, the contract agency shall forward the appropriate copy to the indicated agency within two working days.

76.7(5) The contract agency shall determine the eligibility of the family and the percent of the cost of care that is the family's responsibility. The individual shall be informed in writing of eligibility status prior to incurring costs for care.

76.7(6) Once an individual has been determined to be eligible, the individual shall report any changes in income, family composition, or residency to the contract agency within 30 days from the date the change occurred.

76.7(7) A family seeking direct health care or care/service coordination services, or family support for a child or youth with special health care needs shall follow CHSC policies and procedures. Insurance status and eligibility for the sliding fee scale are determined during the client registration process.

[**ARC 0364C**, IAB 10/3/12, effective 11/7/12]

641—76.8(135) Right to appeal—client.

76.8(1) *Right of appeal.* Individuals applying for MCH services and clients receiving MCH services shall have the right to appeal whenever a decision or action of the department or contract agency results in the denial of participation, suspension, or termination from the approved MCH program. Notification

of the denial of participation, suspension or termination shall be made in writing and shall state the basis for the action. All hearings shall be conducted in accordance with these rules.

76.8(2) *Notification of appeal rights and right to hearing.* Individuals applying for MCH services shall be notified of the right to appeal and the procedures for requesting a hearing at the time of application for MCH services. Information about the appeal and hearing process shall be provided in writing and shall be immediately available at MCH centers. A health professional shall be available to explain the method by which an appeal or hearing is requested and the manner in which the appeal and hearing will be conducted.

76.8(3) *Request for hearing.* A request for a hearing is a written expression by an individual or the individual's parent, guardian, or other representative that an opportunity to present the individual's case is desired. The request shall be filed with the contract agency within 60 days from the date the individual receives notice of the decision or action which is the subject of appeal.

76.8(4) *Receipt of benefits during appeal.* Individual applicants, who are denied program benefits due to a finding of ineligibility, shall not receive benefits during the administrative appeal period. Clients who are involuntarily suspended or terminated from the MCH program shall continue to receive program benefits during the administrative appeal period.

76.8(5) *Hearing officer.* The hearing officer shall be impartial, shall not have been directly involved in the initial determination of the action being contested, and shall not have a personal stake in the decision. Hearing officers may be contract agency directors, health professionals, community leaders, or any impartial citizen. If prior to the hearing the appealing party objects to a contract agency director serving as the hearing officer in a case involving the director's own agency, another hearing officer shall be selected and, if necessary, the hearing shall be rescheduled as expeditiously as possible. Contract agencies may seek the assistance of the Chief, Bureau of Family Health, Iowa Department of Public Health, Lucas State Office Building, 321 East 12th Street, Des Moines, Iowa 50319-0075, in the appointment of a hearing officer.

76.8(6) *Notice of hearing.* The hearing officer shall schedule the time, place and date of the hearing as expeditiously as possible. Parties shall receive notice of the hearing at least ten days in advance of the scheduled hearing. The hearing shall be accessible to the party requesting the hearing. The hearing shall be scheduled within three weeks from the date the contract agency received the request for a hearing or as soon as possible thereafter, unless a later date is agreed upon by the parties.

76.8(7) *Conduct of hearing.* The party requesting the hearing or the party's representative shall have the opportunity to:

a. Examine, prior to and during the hearing, the documents and records presented to support the decision under appeal;

b. Be represented by an attorney or other person at the party's own expense;

c. Bring witnesses;

d. Question or refute any testimony or evidence, including an opportunity to confront and cross-examine adverse witnesses;

e. Submit evidence to establish all pertinent facts and circumstances in the case; and

f. Advance arguments without undue interference.

76.8(8) *Decision.* Decisions of the hearing officer shall be in writing and shall be based on evidence presented at the hearing. The decision shall summarize the facts of the case, specify the reasons for the decision, and identify the supporting evidence and pertinent regulations or policy. The decision shall be issued within 90 days of the receipt of the request for the hearing, unless a longer period is agreed upon by the parties.

76.8(9) *Appeal of decision to the department.* A party receiving an unfavorable decision may file an appeal with the department. Such appeals must be filed in writing within ten working days of the mailing date of the hearing decision. Appeals shall be sent to the Contract Administrator, Division of Administration and Professional Licensure, Iowa Department of Public Health, Lucas State Office Building, 321 East 12th Street, Des Moines, Iowa 50319-0075.

76.8(10) *Contested case.* Upon receipt of an appeal that meets contested case status, the appeal shall be forwarded within five working days to the DIA pursuant to the rules adopted by the DIA regarding

the transmission of contested cases. The information upon which the adverse action is based and any additional information, which may be provided by the aggrieved party, shall also be provided to the DIA.

76.8(11) *Hearing.* Parties shall receive notice of the hearing in advance. The administrative law judge shall schedule the time, place and date of the hearing so that the hearing is held as expeditiously as possible. The hearing shall be conducted according to the procedural rules of the DIA found in 481—Chapter 10, Iowa Administrative Code.

76.8(12) *Decision of administrative law judge.* The administrative law judge's decision shall be issued within 60 days from the date of request for hearing. When the administrative law judge makes a proposed decision and order, it shall be served by certified mail, return receipt requested, or delivered by personal service. That proposed decision and order then becomes the department's final decision without further proceedings ten days after it is received by the aggrieved party unless an appeal to the director is taken as provided in subrule 76.8(13).

76.8(13) *Appeal to the director.* Any appeal to the director for review of the proposed decision and order of the administrative law judge shall be filed in writing and mailed to the director by certified mail, return receipt requested, or delivered by personal service within ten days after the receipt of the administrative law judge's proposed decision and order by the aggrieved party. A copy of the appeal shall also be mailed to the administrative law judge. Any request for an appeal shall state the reason for appeal.

76.8(14) *Record of hearing.* Upon receipt of an appeal request, the administrative law judge shall prepare the record of the hearing for submission to the director. The record shall include the following:

a. All pleadings, motions and rules.

b. All evidence received or considered and all other submissions by recording or transcript.

c. A statement of all matters officially noticed.

d. All questions and offers of proof, objections and rulings thereon.

e. All proposed findings and exceptions.

f. The proposed decision and order of the administrative law judge.

76.8(15) *Decision of director.* An appeal to the director shall be based on the record of the hearing before the administrative law judge. The decision and order of the director becomes the department's final decision upon receipt by the aggrieved party and shall be delivered by certified mail, return receipt requested, or by personal service.

76.8(16) *Exhausting administrative remedies.* It is not necessary to file an application for the rehearing to exhaust administrative remedies when appealing to the director or the district court as provided in Iowa Code section 17A.19. The aggrieved party to the final decision of the department who has exhausted all administrative remedies may petition for judicial review of that action pursuant to Iowa Code chapter 17A.

76.8(17) *Petition for judicial review.* Any petition for judicial review of a decision and order shall be filed in the district court within 30 days after the decision and order becomes final. A copy of the notice of appeal shall be sent to the director by certified mail, return receipt requested, or by personal service. The address is Director, Department of Public Health, Lucas State Office Building, Des Moines, Iowa 50319-0075.

76.8(18) *Benefits after decision.* If a final decision is in favor of the person requesting a hearing and benefits were denied or discontinued, benefits shall begin immediately and continue pending further review should an appeal to district court be filed. If a final decision is in favor of the contract agency, benefits shall be terminated, if still being received, as soon as administratively possible after the issuance of the decision. Benefits denied during an administrative appeal period may not be awarded retroactively following a final decision in favor of a person applying for MCH services.

[**ARC 0364C**, IAB 10/3/12, effective 11/7/12]

641—76.9(135) Grant application procedures for community-based contract agencies. Private nonprofit or public agencies seeking to provide community-based Title V MCH public health services shall file a letter of intent to make application to the department during the competitive year. Applications shall be to administer MCH services for a specified project period, as defined in the request

for proposal, with an annual continuation application. The contract period shall be from October 1 to September 30 annually. All materials submitted as part of the grant application are considered public records in accordance with Iowa Code chapter 22, after a notice of award is made by the department. Notification of the availability of funds and grant application procedures will be provided in accordance with the department rules found in 641—Chapter 176.

Contract agencies are selected on the basis of the grant applications submitted to the department. The department will consider only applications from private nonprofit or public agencies. In the event that competitive proposals receive an equal number of points, two department division directors and the respective bureau chief administering the program may conduct a second review utilizing the same scoring process.
[**ARC 0364C**, IAB 10/3/12, effective 11/7/12]

641—76.10(135) Funding levels for community-based contract agencies. The amount of Title V MCH funds available to each contract agency on an annual basis shall be determined by the department using a methodology based upon dollars available, number of clients enrolled, and selected needs criteria.
[**ARC 0364C**, IAB 10/3/12, effective 11/7/12]

641—76.11(135) Contract agency performance. Contract agencies are required to provide services in accordance with these rules.

76.11(1) *Performance measures.* Contract agencies must report on activities and progress toward meeting NPM, SPM, and other performance measures identified by the department.

76.11(2) *Contract agency review.* The department shall review contract agency operations through the use of reports and documents submitted, state-generated data reports, chart audits, on-site and clinic visits for direct care services as applicable for evaluation and technical assistance.

76.11(3) *Exception.* Rescinded IAB 10/3/12, effective 11/7/12.
[**ARC 0364C**, IAB 10/3/12, effective 11/7/12]

641—76.12(135) Reporting. Completion of grant applications, budgets, expenditure reports, annual progress reports, and data forms shall be performed by contract agencies in compliance with the contract with the department.

641—76.13(135) Fiscal management. All contract agencies are required to meet fiscal management policies.

76.13(1) *Last pay.* Title V MCH funds are considered last pay. Title XIX and other third-party payers are to be billed first if other resources cover the service.

76.13(2) *Program income.* Program income may be used for allowable costs of the MCH contract agency. A spending plan must be approved by the department for use of program income in excess of 5 percent above the amount approved in the program budget. Program income must be used before the funds received from the department are used. Excess program income may be retained to build a three-month operating capital.

76.13(3) *Advances.* A contract agency may request an advance of up to one-sixth of its contract at the beginning of a contract year. The amount of any advance will be deducted prior to the end of the fiscal year.

76.13(4) *Local share.* Community-based contract agencies are required to match the Title V MCH funds received from the department at a minimum rate of one dollar of local match for every four dollars received from the department. Sources that may be used for match are reimbursement for service from third parties such as insurance and Title XIX, client fees, local funds from nonfederal sources, or in-kind contributions. In-kind contributions must be documented in accordance with generally accepted accounting principles.

76.13(5) *Subcontracts.* Contract agencies may subcontract a portion of the project activity to another entity provided such subcontract is approved by the department. Subcontract agencies must follow the same rules, procedures, and policies as required of the contract agency by these rules and contract with

the department. The contract agency is responsible for ensuring the compliance of the subcontract. Subcontract agencies may not subcontract these project activities with other entities.
[**ARC 0364C**, IAB 10/3/12, effective 11/7/12]

641—76.14(135) Audits. Every two years, each contract agency shall undergo financial audit of the MCH program. The audit shall be conducted in compliance with OMB Circular A-133 Audits of States, Local Governments, and Non-Profit Organizations. Each audit shall cover all unaudited periods through the end of the previous grant year. The department's audit guide should be followed to ensure an audit which meets federal and state requirements.

641—76.15(135) Diagnosis and therapeutic services for children. Rescinded IAB 2/6/02, effective 3/13/02.

641—76.16(135) Denial, suspension, revocation or reduction of contracts with contract agencies. The department may deny, suspend, revoke or reduce contracts with contract agencies in accord with applicable federal regulations or contractual relationships. Notice of such action shall be in writing.

641—76.17(135) Right to appeal—contract agency. Community-based contract agencies may appeal the denial of a contract or the suspension, revocation or reduction of an existing contract.

76.17(1) *Appeal.* The appeal shall be made in writing to the department within ten days of receipt of notification of the adverse action. Notice is to be addressed to the Contract Administrator, Division of Administration and Professional Licensure, Iowa Department of Public Health, Lucas State Office Building, 321 East 12th Street, Des Moines, Iowa 50319-0075.

76.17(2) *Contested case.* Upon receipt of an appeal that meets contested case status, the appeal shall be forwarded within five working days to the DIA pursuant to the rules adopted by the DIA regarding the transmission of contested cases. The information upon which the adverse action is based and any additional information, which may be provided by the aggrieved party, shall also be provided to the DIA.

76.17(3) *Hearing.* Parties shall receive notice of the hearing in advance. The administrative law judge shall schedule the time, place and date of the hearing so that the hearing is held as expeditiously as possible. The hearing shall be conducted according to the procedural rules of the DIA found in 481—Chapter 10.

76.17(4) *Decision of administrative law judge.* The administrative law judge's decision shall be issued within 60 days from the date of request for hearing. When the administrative law judge makes a proposed decision and order, it shall be served by certified mail, return receipt requested, or delivered by personal service. That proposed decision and order then becomes the department's final decision without further proceedings ten days after it is received by the aggrieved party unless an appeal to the director is taken as provided in subrule 76.17(5).

76.17(5) *Appeal to the director.* Any appeal to the director for review of the proposed decision and order of the administrative law judge shall be filed in writing and mailed to the director by certified mail, return receipt requested, or delivered by personal service within ten days after the receipt of the administrative law judge's proposed decision and order by the aggrieved party. A copy of the appeal shall also be mailed to the administrative law judge. Any request for an appeal shall state the reason for appeal.

76.17(6) *Record of hearing.* Upon receipt of an appeal request, the administrative law judge shall prepare the record of the hearing for submission to the director. The record shall include the following:

a. All pleadings, motions and rules;
b. All evidence received or considered and all other submissions by recording or transcript;
c. A statement of all matters officially noticed;
d. All questions and offers of proof, objections and rulings thereon;
e. All proposed findings and exceptions; and
f. The proposed decision and order of the administrative law judge.

76.17(7) *Decision of director.* An appeal to the director shall be based on the record made at the hearing. The decision and order of the director becomes the department's final decision upon receipt by the aggrieved party and shall be delivered by certified mail, return receipt requested, or by personal service.

76.17(8) *Exhausting administrative remedies.* It is not necessary to file an application for a rehearing to exhaust administrative remedies when appealing to the director or the district court as provided in Iowa Code section 17A.19. The aggrieved party to the final decision of the department who has exhausted all administrative remedies may petition for judicial review of that action pursuant to Iowa Code chapter 17A. Petition for judicial review must be filed within 30 days after decision becomes final.
[**ARC 0364C**, IAB 10/3/12, effective 11/7/12]

641—76.18 to **76.20** Reserved.

MATERNAL AND CHILD HEALTH ADVISORY COUNCIL

641—76.21(135) Purpose. The MCH advisory council assists in the development of the state plan for MCH, including children and youth with special health care needs and family planning. The council assists with assessment of need, prioritization of services, establishment of objectives, and encouragement of public support for MCH and family planning programs. In addition, the council advises the director regarding health and nutrition services for women and children, supports the development of special projects and conferences, and advocates for health and nutrition services for women and children.
[**ARC 0364C**, IAB 10/3/12, effective 11/7/12]

641—76.22(135) Mission. The mission of the MCH advisory council is to assist the department in improving coordination of and promoting an integrated health system serving children and families in Iowa. Areas of emphasis include Title V MCH and any other programs in the department that address the well-being of children and families.
[**ARC 0364C**, IAB 10/3/12, effective 11/7/12]

641—76.23(135) Membership. Membership of the MCH advisory council shall include representatives of professional groups, agency representatives, legislators, and individuals with an interest in promoting health services for women and children.

76.23(1) Appointments to the council shall be made by the director.

a. Each appointment shall be for a term of three years, commencing on July 1.

b. No member shall serve more than two full consecutive terms (this provision may be waived by the director in exceptional cases).

c. In order to ensure that one third of the council rotates each year, staggered terms shall be initiated in June. For terms expiring during the calendar year, appointments and reappointments shall be staggered, resulting in a council with approximately one third of the terms of membership expiring in each year.

d. The goal is to attempt to implement a gender-balanced council membership.

e. The number of members shall not be fewer than 15 or more than 25.

76.23(2) The council shall be composed of the following categories:

a. Required members.

(1) The chair (or designee) of the department's perinatal advisory committee.

(2) The chair (or designee) of the congenital and inherited disorders advisory committee.

(3) With approval of the director:

1. A representative chosen by the Iowa State Association of Counties.
2. A representative chosen by the Iowa Dental Association.
3. A representative chosen by the Iowa Dietetic Association.
4. A representative chosen by the American Academy of Family Physicians, Iowa chapter.
5. A representative chosen by the American Academy of Pediatrics, Iowa chapter.

6. A representative chosen by the American College of Obstetricians and Gynecologists, Iowa chapter.

7. A representative chosen by the state board of health.

(4) Three family representatives, appointed by the director, may represent parents with children and youth with special health care needs, parents with children participating in Medicaid or HAWK-I, or parents with children participating in child care or early childhood education.

b. Discretionary members. A maximum of 13 additional members from among the following may be appointed by the director:

(1) Adolescent health.
(2) Women's health.
(3) Insurance (private sector).
(4) Child care.
(5) Legal services.
(6) Child advocate.
(7) Social service.
(8) Infant mortality prevention.
(9) University extension services.
(10) Voluntary agency.
(11) Children's mental health.
(12) Youth.
(13) Child health.
(14) Adult mental health.
(15) Substance abuse.
(16) Domestic violence or sexual violence services, or both.
(17) Juvenile justice.
(18) Oral health.

c. Ex officio members. The following may serve as ex officio, nonvoting members of the council:

(1) One state senator and one state representative.

(2) The chair (or designee) of the bureau of family health grantee committee, Iowa department of public health.

(3) A representative of the department of education, division of learning and results.

(4) A representative of the department of human services, Iowa Medicaid enterprise.

(5) A representative of the department of human services, division of adult, children and family services, bureau of child care and community services.

(6) Director (or designee) of Child Health Specialty Clinics.

(7) The chair (or designee) of the early childhood Iowa board.

76.23(3) Vacancies shall be filled in the same manner in which the original appointments were made for the balance of the unexpired term. The nominations committee will make recommendations to the director for appointments.

[**ARC 0364C**, IAB 10/3/12, effective 11/7/12]

641—76.24(135) Officers.

76.24(1) Officers of the council shall be a chairperson and a vice chairperson who shall be elected by the members at the last scheduled meeting of each fiscal year.

a. The term of elected office shall be one year.

b. A member shall not serve as chairperson for more than three full consecutive years.

c. Vacancies in the office of chairperson shall be filled by elevation of the vice chairperson.

d. Vacancies in the office of vice chairperson shall be filled by election at the next meeting after the vacancy occurs.

76.24(2) Duties of officers.

a. The chairperson shall:

(1) Preside at all meetings of the council,

(2) Represent the council at appropriate or designated meetings,

(3) Appoint such committees as deemed necessary, and

(4) Designate the chairperson of ad hoc committees.

b. The vice chairperson shall:

(1) Perform the duties of the chairperson if the chairperson is absent or unable to act. When so acting, the vice chairperson shall have all the powers of and be subject to all restrictions upon the chairperson.

(2) Perform such other duties as may be assigned by the chairperson.

(3) Represent the council at designated meetings at the request of the chairperson.

[**ARC 0364C**, IAB 10/3/12, effective 11/7/12]

641—76.25(135) Duties of the council. The council shall perform the following duties:

76.25(1) Review the state's maternal, child, and adolescent health needs and the adequacy of health care services, programs, and providers to meet those needs.

76.25(2) Review local health statistics and program data to assess improvement in the overall health status of women and children.

76.25(3) Represent the concerns of consumers and local service providers in their relationship with the department programs and initiatives and other state agency initiatives.

76.25(4) Provide input and feedback in the development of the MCH state plan, the I-Smile™ program, family planning grant application and programming objectives, MIECHV state plan, and the WIC state plan, including the assessment of need, the prioritization of services and the establishment of objectives.

76.25(5) Identify potential collaborative partners to help achieve the mission and goals of the MCH advisory council and the department.

76.25(6) Disseminate information and report back to representative consumer groups and local providers regarding department programs, initiatives, services, and state plans.

[**ARC 0364C**, IAB 10/3/12, effective 11/7/12]

641—76.26(135) Meetings.

76.26(1) Meetings of the council will be held as necessary and at the call of the director or the chairperson. There shall be a minimum of four meetings per year.

a. At the last scheduled meeting of the fiscal year, the regular meetings for the following year will be scheduled.

b. Notice of meetings will be sent at least two weeks prior to the meeting date.

c. Materials for the meeting will be sent at least one week prior to the meeting date.

76.26(2) All meetings are open to the public in accordance with the open meetings law, Iowa Code chapter 21.

76.26(3) A majority of the required and discretionary membership shall constitute a quorum.

76.26(4) At all meetings of the council, the act of the majority of the members present at the meeting shall be the act of the council.

76.26(5) Meeting attendance.

a. Attendance shall be expected at all meetings unless circumstances prohibit attendance.

b. Participation by telephone or other means is permissible so long as arrangements can be made by the department for such participation.

c. Three unexcused absences per fiscal year shall result in termination of membership as determined by the director or the director's designee.

76.26(6) The council shall maintain information sufficient to indicate the results of each vote. If necessary, members may be polled telephonically or electronically.

76.26(7) Subcommittees shall meet as necessary.

[**ARC 0364C**, IAB 10/3/12, effective 11/7/12]

641—76.27(135) Executive committee.

76.27(1) The executive committee shall be composed of the chairperson and vice chairperson, assisted by two members appointed by the chairperson at the beginning of the fiscal year.

76.27(2) The executive committee will meet as necessary to act on behalf of the full council to develop a recommendation when the council is not in session.

76.27(3) The executive committee may request staff support and assistance from department management.

[**ARC 0364C**, IAB 10/3/12, effective 11/7/12]

641—76.28(135) Committees. The council may designate one or more committees to perform such duties as may be deemed necessary.

76.28(1) The chairperson appoints the nominations committee, which will submit a slate of potential members and officers.

76.28(2) Additional committees or ad hoc committees may be formed as needed.

76.28(3) Committees should be utilized whenever possible to review particular substantive areas by previewing recommendations, framing issues for the larger group and presenting on issues that need to be addressed by the council.

[**ARC 0364C**, IAB 10/3/12, effective 11/7/12]

These rules are intended to implement Iowa Code subsection 135.11(17).

[Filed 9/30/88, Notice 8/10/88—published 10/19/88, effective 11/23/88]
[Filed emergency 7/21/89—published 8/9/89, effective 7/21/89]
[Filed 11/9/89, Notice 8/9/89—published 11/29/89, effective 1/3/90]
[Filed 9/28/90, Notice 6/13/90—published 10/17/90, effective 11/21/90]
[Filed 5/10/91, Notice 1/9/91—published 5/29/91, effective 7/3/91]
[Filed 9/13/91, Notice 7/10/91—published 10/2/91, effective 11/6/91]
[Filed 3/13/92, Notice 2/5/92—published 4/1/92, effective 5/6/92]
[Filed 1/11/96, Notice 11/8/95—published 1/31/96, effective 3/6/96]
[Filed emergency 3/10/99 after Notice 1/13/99—published 4/7/99, effective 3/10/99]
[Filed 1/10/02, Notice 11/28/01—published 2/6/02, effective 3/13/02]
[Filed ARC 0364C (Notice ARC 0226C, IAB 7/25/12), IAB 10/3/12, effective 11/7/12]

CHAPTER 77
LOCAL BOARDS OF HEALTH
[Prior to 7/29/87, Health Department[470] Ch 77]

641—77.1(137) Purpose. The local board of health shall have jurisdiction over public health matters within its designated geographic area in accordance with Iowa Code chapter 137. The local board of health shall promote and protect the health of the residents and shall carry out the powers of local boards as specified in Iowa Code sections 137.103 and 137.104 and all applicable Iowa Code chapters.
[**ARC 9773B**, IAB 10/5/11, effective 11/9/11]

641—77.2(137) Definitions. For the purpose of these rules, the following definitions apply:

"Core public health functions" means the functions of assessment, policy development, and assurance.

1. Assessment: Regular collection, analysis, interpretation, and communication of information about health conditions, risks, and assets in a community.
2. Policy development: Development, implementation, and evaluation of plans and policies, for public health in general and priority health needs in particular, in a manner that incorporates scientific information and community values and in accordance with state public health policy.
3. Assurance: Ensuring by encouragement, regulation, or direct action that programs and interventions that maintain and improve health are carried out.

"County health department" refers to the personnel and property under the jurisdiction of a county board.

"Department" means the Iowa department of public health.

"District" means any two or more geographically contiguous counties.

"District board" means a board of health representing at least two geographically contiguous counties formed with the approval of the department in accordance with Iowa Code chapter 137, or any district board of health in existence prior to July 1, 2010.

"District health department" refers to the personnel and property under the jurisdiction of a district board.

"Environmental health services" means services focused on the environment to support population-based health services.

"Essential public health services" means those activities carried out by public health that fulfill the core functions.

"Iowa public health standards" means the governmental public health standards adopted by rule by the state board of health.

"Local board of health" means a city, county, or district board of health.

"Personal health services" means services focused on the care of individuals.

"Population-based health services" means services focused on the health status of population groups and their environments.
[**ARC 9773B**, IAB 10/5/11, effective 11/9/11]

641—77.3(137) Local boards of health—roles and responsibilities. Public health is responsible for safeguarding the community's health. This goal is pursued through three core functions: assessment, policy development and assurance.

77.3(1) Assessment: Regularly and systematically collect, assemble, analyze, and make available information on the health of the community, including statistics on health status, community health needs, personal health services, and epidemiologic and other studies of health problems. A local board of health may perform the following essential public health services:

a. Monitor health status to identify community health problems;

b. Diagnose and investigate health problems and health hazards in the community; and

c. Evaluate effectiveness, accessibility, and quality of personal, population-based, and environmental health services.

77.3(2) Policy development: Exercise responsibility to serve the public interest in the development of comprehensive public health policies. This core function can be accomplished by promoting use of a scientific knowledge base in decision making about public health and by taking the lead in public health policy development.

a. A local board of health may perform the following essential public health services:

(1) Develop policies and plans that support individual and community health efforts; and

(2) Research new insights and innovative solutions to health problems and health threats.

b. A local board of health shall perform the following essential public health services:

(1) Enforce laws and regulations that protect public health and enforce lawful orders of the department;

(2) Make and enforce reasonable rules and regulations not inconsistent with the law, the rules of the state board, or the Iowa public health standards as may be necessary for the protection and improvement of the public health; and

(3) Employ persons as necessary for the efficient discharge of its duties. Employment practices shall meet the requirements of Iowa Code chapter 8A, subchapter IV, or any civil service provision adopted under Iowa Code chapter 400.

77.3(3) Assurance: Assure constituents that services necessary to achieve agreed-upon goals are provided either by encouraging action by other entities (private or public sector), by requiring such action through regulation, or by providing services directly. Each local board of health must involve key policymakers and the general public in determining a set of high-priority personal and population-based health services. A local board of health may perform the following essential public health services:

a. Link people to needed personal health services; provide such personal, population-based and environmental health services as deemed necessary for the promotion and protection of the health of the public; and charge reasonable fees for personal health services;

b. Ensure the competence of the public health, environmental health, and personal health care workforce;

c. Inform, educate, and empower people about health issues;

d. Mobilize community partnerships to identify and solve health problems;

e. Issue licenses and permits and charge reasonable fees in relation to the construction or operation of nonpublic water supplies or private sewage disposal systems;

f. Engage in joint operations by:

(1) Contracting with colleges and universities, the department, other public, private, and nonprofit agencies, and individuals; or

(2) Forming a district health department to provide personal and population-based health services; and

g. Enforce, by written agreement with the council of any city within its jurisdiction, appropriate ordinances of the city relating to public health.

[**ARC 9773B**, IAB 10/5/11, effective 11/9/11]

641—77.4(137) Local boards of health—Iowa public health standards. Local boards of health may:

1. Designate an agency to assure compliance with the Iowa public health standards in the jurisdiction.

2. Demonstrate a commitment to comply with the Iowa public health standards.

3. Request at least annually reports from organizations that provide public health services within the jurisdiction.

[**ARC 9773B**, IAB 10/5/11, effective 11/9/11]

641—77.5(137) Organization of local boards of health.

77.5(1) *Qualifications.* Members of a local board of health should have experience or education related to the core public health functions, essential public health services, public health, environmental health services, personal health services, population-based services, or community-based initiatives.

77.5(2) *Officers of local boards of health.* Each local board of health shall, at its first meeting during any calendar year, elect one of its members to serve as chairperson until the first meeting of the following calendar year.

a. The local board of health may elect a vice-chairperson, secretary, or other such officers as it may deem advisable.

b. In case of a vacancy of the office of chairperson, a successor, who shall serve the remainder of the term, shall be elected at the next meeting of the board.

77.5(3) *Meetings of local boards of health.* The place, date and time of regular meetings of the local board of health shall be determined by vote of the board, and such meetings shall comply with the provisions of the open meetings law which is found in Iowa Code chapter 21.

a. Each local board of health shall meet at least six times per year.

b. Special meetings of a local board of health may be called, as needed, by the chairperson or by any three board members. The local board of health shall provide at least 24 hours' notice of special meetings, except in case of emergency.

c. A majority of the members of a local board of health shall be considered a quorum, and an affirmative vote of the majority of the members present is necessary for action taken by a local board of health. The majority shall not include any member who has a conflict of interest, and a statement by the member that a conflict of interest exists shall be conclusive for this purpose.

[**ARC 9773B**, IAB 10/5/11, effective 11/9/11]

641—77.6(137) Operation of local boards of health. Local boards of health shall submit to the department the following information:

77.6(1) Names, addresses, E-mail addresses and telephone numbers of members of the local board of health, within one month after their appointment.

77.6(2) Names of the chairperson and any other officers elected by the local board of health, within one month after their election.

77.6(3) A copy of the minutes of each regular and special meeting of the local board of health, within two weeks of their being approved. The minutes shall include at least:

a. The date and place of the meeting;

b. A list of members present; and

c. A report of any official board actions.

[**ARC 9773B**, IAB 10/5/11, effective 11/9/11]

641—77.7(137) Expenses of local board of health members.

77.7(1) The following may be considered necessary expenses of local board of health members:

a. Travel in private car on local board of health business at the same rate as provided for a public officer or employee in Iowa Code section 70A.9.

b. Lodging and meal expenses including sales tax on lodging and meals.

c. Expense of public transportation when traveling on local board of health business.

d. Miscellaneous expenses related to performance of duties as approved by the local board of health.

e. Training and education expenses.

77.7(2) This rule shall not be construed as requiring the payment of reimbursement to any person or as prohibiting local boards of health from imposing additional restrictions or administrative requirements on expenses of their members.

[**ARC 9773B**, IAB 10/5/11, effective 11/9/11]

641—77.8(137) District boards of health. The county boards of health of any two or more geographically contiguous counties may at any time submit to the department a written request to form a district board of health.

77.8(1) A request to form a district board of health shall be executed by the county boards of supervisors and the county boards of health for each county comprising the proposed district.

77.8(2) A request to form a district board of health shall be submitted to the department and shall be completed on the department's application form. The application form shall include:

a. A written narrative that explains how the formation of a district board of health will increase organizational capacity and capability to provide population-based and personal health services compared with operating as local boards of health.

b. A written narrative that details the infrastructure capability of the proposed district board of health to deliver core public health functions, provide essential public health services, and comply with Iowa public health standards.

c. The composition of the district board of health, including the number of members each county shall appoint pursuant to Iowa Code section 135.105 and the total number of members on the district board of health.

d. Proof of approval by all county boards of supervisors and county boards of health involved in the request to form a district and of the elements included in the formation plan.

e. A service delivery plan to include each component of the public health standards. The service delivery plan shall detail how population-based and environmental health services will be delivered throughout the district.

f. The budget and fiscal plan for the proposed district health department. The budget plan shall include an estimate of the proposed expenditures and revenues and an allocation of the revenue responsibilities of each of the counties participating in the proposed district.

g. A table of organization.

h. A personnel system description, including identification of the district health department treasurer and district health department auditor and a section which addresses the employment issues contained in Iowa Code section 137.110.

i. The location of the district health department offices and workforce throughout the jurisdiction. The request shall include a map showing district boundaries.

j. An inventory of the property and equipment in the custody of each county health department and a description as to whether such property and equipment shall remain in the custody of the county health department or shall be transferred to the district health department to become property of the district health department. Property and equipment include any item which costs more than $5,000.

k. An information technology (IT) plan that details the formation of a centralized IT department able to serve the needs of the proposed district health department.

l. A proposed date upon which the district board of health shall be formed and established and a timeline for the adoption of district board of health rules and regulations.

[**ARC 9773B**, IAB 10/5/11, effective 11/9/11]

641—77.9(137) Approval of district board of health formation.

77.9(1) Upon receipt of the application form and all information contained in rule 641—77.8(137), the department shall review such information and shall determine, within 30 days, whether the required elements have been presented by the proposed district.

77.9(2) The department shall present its findings to the state board of health at the board's next regularly scheduled meeting, at which time the state board of health may approve formation of the district board of health.

77.9(3) The state board of health shall immediately provide notice of approval of district board of health formation, including effective dates, to the county board of health of each county in the district and to the board of supervisors of each county in the district.

77.9(4) Upon receipt of the notice of approval of district board of health formation, each appointing authority shall, prior to the effective date of district board of health formation, appoint district board of health members as specified in Iowa Code section 137.105.

[**ARC 9773B**, IAB 10/5/11, effective 11/9/11]

641—77.10(137) Denial of district board of health formation. The department and the state board of health have the authority to deny formation of a district board of health. The department is responsible for assessing the application form for completeness and accuracy. The state board of health has the authority

to deny formation of a district board of health if the application does not show sufficient organizational capacity to deliver core public health functions and essential public health services, does not ensure compliance with the Iowa public health standards, or otherwise fails to conform with Iowa Code chapter 137 or this chapter.

77.10(1) The department will notify, in writing, all local boards of health in the proposed district of the reason and rationale for the denial of the district board of health formation within 30 days of the decision.

77.10(2) The local boards of health in the proposed district shall have the right to request reconsideration of the decision by submitting the request to the department within 30 days of receiving notice of the decision.

77.10(3) The state board of health shall reconsider the request by the local boards of health at its next regularly scheduled meeting. The reconsideration shall not constitute a contested case hearing. The state board of health's final decision following reconsideration shall constitute final agency action pursuant to Iowa Code section 17A.19, and judicial review of any such decision shall be treated as other agency action.

[**ARC 9773B**, IAB 10/5/11, effective 11/9/11]

641—77.11(137) Adding to a district board of health. A county may be added to an existing district board of health by submission and approval of a request, as specified in Iowa Code sections 137.106 and 137.107.

[**ARC 9773B**, IAB 10/5/11, effective 11/9/11]

641—77.12(137) Withdrawal from a district board of health. A county may voluntarily withdraw from a district board of health by submitting a request for withdrawal to the department for approval. The request shall include a time line and plan to reestablish a county board of health or to join a different district board of health to provide the core public health functions and essential public health services to the county's geographic area.

77.12(1) If the request for withdrawal of the applicant county from the district board of health is approved by the state board of health, an effective date shall be set for the action, and notification shall be sent to the district board of health and the board of supervisors of the applicant county.

77.12(2) The ownership of property and equipment shall follow the guidelines submitted in the original request to form the district board of health.

77.12(3) The remaining counties in the district shall submit an application including the information specified in rule 641—77.8(137) to the department for review as provided in Iowa Code section 137.107.

[**ARC 9773B**, IAB 10/5/11, effective 11/9/11]

These rules are intended to implement Iowa Code chapter 137.

[Filed 10/10/67; amended 1/22/68]

[Filed 3/18/76, Notice 2/9/76—published 4/5/76, effective 5/10/76]

[Filed 11/29/79, Notice 10/17/79—published 12/26/79, effective 1/31/80]

[Filed emergency 7/10/87—published 7/29/87, effective 7/10/87]

[Filed 3/18/98, Notice 1/14/98—published 4/8/98, effective 5/13/98]

[Filed ARC 9773B (Notice ARC 9632B, IAB 7/27/11), IAB 10/5/11, effective 11/9/11]

[Prior to 7/29/87, Health Department[470] Ch 78]

CHAPTER 78
DISTRICT HEALTH DEPARTMENTS

[Prior to 7/29/87, Health Department[470] Ch 78]

Rescinded IAB 10/5/11, effective 11/9/11

CHAPTER 79
PUBLIC HEALTH NURSING

[Prior to 7/29/87, Health Department[470] Ch 79]

Rescinded IAB 4/11/07, effective 7/1/07; see 641—Ch 80

CHAPTER 80
LOCAL PUBLIC HEALTH SERVICES

[Prior to 8/3/94, "Homemaker-Home Health Aide Services"]
[Prior to 4/11/07, see also 641—Ch 79]

641—80.1(135) Purpose. The purposes of the local public health services state grant is to assist with assuring core public health functions and delivering essential public health services and to increase the capacity of local boards of health to promote healthy people and healthy communities.

641—80.2(135) Definitions. For the purposes of these rules, the following definitions apply:

"Administrative expense" means the costs incurred which are not identified readily and specifically with a program but which are necessary to the general operations of the authorized agency.

"Appropriation formula" means the method used to distribute the allocations of the state grant to each county.

"Authorized agency" means a contractor or a private nonprofit or governmental organization delivering all or part of the local public health services funded by the local public health services state grant.

"Care coordination" means assessing a consumer's need for care; developing, implementing and updating the plan of care; assigning a direct care worker to the case; assigning direct care worker duties, including specifying the frequency of task performance and the length and frequency of visits; providing referrals and follow-up; coordinating the case, including coordinating interagency and intra-agency communications; and maintaining records and reports.

"Community" means the aggregate of persons with common characteristics such as race, ethnicity, age, or occupation or other similarities such as location.

"Consumer" means an individual, family, or community utilizing essential public health services through the local public health services state grant.

"Contractor" means the local board of health or the county board of supervisors as agreed upon by the local board of health and the county board of supervisors.

"Core public health functions" means the scope of activities which serve as a broad framework for public health agencies. Core public health functions are:

1. Assessment, which means to regularly and systematically collect, assemble, analyze, and make available information on the health of the community, including statistics on health status, community health needs and personal health services and epidemiologic and other studies of health problems.
2. Policy development, which means efforts to serve the public interest in the development of comprehensive public health policies by promoting use of a scientific knowledge base in decision making about public health and by taking the lead in comprehensive public health policy development.
3. Assurance, which means public health efforts to assure constituents that services necessary to achieve agreed-upon goals are provided either by encouraging actions by other entities (private or public sector), by requiring such action through regulation, or by providing services directly.

"Department" means the Iowa department of public health.

"Dependent nursing" means a function requiring the skills of a licensed registered nurse and the order of a physician according to 655—Chapter 6, Iowa Administrative Code.

"Direct care worker" means a trained and supervised individual who provides services, care, and emotional support to consumers.

"Essential public health services" means activities carried out by the authorized agency fulfilling core public health functions. Essential public health services are:

1. Monitoring health status and understanding health issues facing the community.
2. Protecting people from health problems and health hazards.
3. Giving people information they need to make healthy choices.
4. Engaging the community to identify and solve health problems.
5. Developing public health policies and plans.
6. Enforcing public health laws and regulations.
7. Helping people receive health services.

8. Maintaining a competent public health workforce.
9. Evaluating and improving programs and interventions.
10. Contributing to and applying the evidence base of public health.

"Evaluation" means the process to measure the effectiveness of interventions by measuring outcomes against previously established goals and objectives.

"Health promotion" means organizational, economic and environmental supports and education to stimulate healthy behaviors in individuals, groups or communities.

"Income" means all sources of revenue for the consumer and, if applicable, the consumer's spouse.

"Independent nursing" means a function requiring the skills of a licensed registered nurse according to 655—Chapter 6, Iowa Administrative Code.

"Local board of health" means a county, city or district board of health as defined in Iowa Code section 137.2.

"Nonprofit" means an entity meeting the requirements for tax-exempt status under the United States Internal Revenue Code.

"Nursing process" means the steps completed by a skilled licensed registered nurse according to 655—Chapter 6, Iowa Administrative Code.

"Outcome" means an action or event that follows as a result or consequence of the provision of a service or support.

"Outcome measures" means the mathematical expression of the effect of an activity, product, or service on consumers and the public health. Outcome measures are used to determine the extent to which the activity, product, or service has impacted its intended audience and to identify progress toward the achievement of a goal.

"Personal health services" means health services delivered to individuals, including primary care, specialty care, hospital care, emergency care, and rehabilitative care. For the purpose of the local public health services state grant, personal health services include nursing (disease and disability), nursing (health maintenance), home care aide (homemaker), and home care aide (personal care) activities.

"Population-based services" means interventions or activities for a community to promote health and to prevent disease, injury, disability, premature death, and exposure to environmental hazards.

"Poverty" means the level of adjusted income, factoring in resources and income, which is at or below 75 percent of the current federal poverty guidelines.

"Preservice education" means training required prior to assignment.

"Procedures" means the steps to be taken to implement a policy.

"Process" means a service or support provided by an authorized agency to a consumer that will allow the consumer to achieve an outcome. A process may include a written, formal, and consistent trackable method or an informal method that is not written but is trackable.

"Program," for the purposes of the state grant, means local public health services, local board of health services, public health nursing services, and home care aide services.

"Protective services" means interventions or activities for a child or adult to alleviate, protect against, or prevent situations which could lead to abuse or neglect. For the purposes of the local public health services state grant, protective services require an order from the justice system.

"Quality improvement" means a process to review, plan and ensure standards of quality for essential public health services, interventions and activities.

"Resources" means unrestricted assets owned by a consumer and, if applicable, by the consumer's spouse. The place of residence and one vehicle are exempt from consideration of resources.

"Restricted assets" means assets typically involving a penalty for early withdrawal such as IRA accounts, KEOGH accounts, 401(k) accounts, employee retirement accounts, and other deferred tax protected assets involving a penalty for early withdrawal. Restricted assets shall not be considered as a resource in the determination of a consumer's financial liability for services.

"Service management" means recruiting, employing, providing workforce development to, scheduling, supervising and evaluating direct care workers; ensuring the competency of direct care workers; providing quality assurance for the program; and maintaining community relations.

"Sliding fee scale" means a scale of consumer fee responsibility based on an assessment of the consumer's ability to pay all or a portion of the charge for services.

"State grant" means the local public health services state grant, which is the allocation of state funds appropriated annually by the Iowa general assembly for local public health services.

"Unrestricted assets" means assets that can be converted to cash for financial support. Unrestricted assets shall be considered in the determination of a consumer's financial liability for services in the sliding fee calculation.

"Vulnerable population" means individuals or groups in the community who are unable to promote and protect their personal and environmental health.

"Workforce development" means the provision of training relevant to services or tasks assigned to direct care workers to enhance their knowledge and the delivery of essential public health services.

641—80.3(135) Local public health services state grant. The following applies to the state allocation for local public health services, local board of health services, public health nursing services, and home care aide services.

80.3(1) *Priority population.* The state grant serves all populations, with a priority to serve vulnerable populations in Iowa.

80.3(2) *Contractor assurance.* In order to receive funding, the contractor shall provide to the department assurance that authorized agencies meet all applicable federal, state, and local requirements. The contractor may directly provide or subcontract all or part of the delivery of services. The contractor shall assure that each authorized agency complies with Title IV of the Civil Rights Act, the Americans with Disabilities Act of 1990 (ADA), and Section 504 of the 1973 Rehabilitation Act and with affirmative action requirements. In addition, the contractor shall assure that each authorized agency has, at a minimum, the following:

a. A governing board.

b. Program policies and procedures, which shall, at a minimum, include:

(1) Admission and discharge.

(2) A consumer appeals process.

(3) Records appropriate to the level of consumer care.

(4) A financial assessment.

(5) A sliding fee scale.

c. Personnel policies and procedures, which shall be reviewed and updated annually and communicated to staff. Personnel policies and procedures shall, at a minimum, include:

(1) Delegation of authority and responsibility for agency administration.

(2) Staff supervision.

(3) A staff training program for the identification and reporting of child and dependent adult abuse to the department pursuant to Iowa Code sections 232.69 and 235B.3.

(4) Conditions of employment including recruitment, selection, termination, promotion and compensation.

(5) A leave of absence policy.

(6) A grievance procedure.

(7) Annual employee performance evaluations.

(8) A nondiscrimination policy.

(9) An employee orientation program.

(10) A provision for career or workforce development.

(11) Fringe benefits.

(12) Employment application forms which comply with civil rights regulations.

(13) Current job descriptions which delineate qualifications, responsibilities and essential functions, reflect current responsibilities, and are dated.

(14) A current salary schedule.

d. Fiscal management, which shall, at a minimum, include:

(1) An annual budget.

(2) Fiscal policies and procedures which follow generally accepted accounting practices.

(3) An annual audit which is performed according to usual and customary accounting principles and practices.

e. A quality improvement plan. The plan shall address annual evaluation of the authorized agency, public health programs, and professional development and shall include:

(1) Written goals, objectives, and performance measures that use appropriate data and are analyzed regularly.

(2) Strategies to monitor program and service compliance with local, state, and federal requirements.

(3) Evidence that programs and services align with community health priorities.

(4) Methods for reporting the outcomes of evaluation to stakeholders.

(5) Steps to determine the cost-effectiveness of programs and services.

641—80.4(135) Billing services to the local public health services state grant. The contractor shall bill public health activities to the state grant based on the identified needs of the community.

80.4(1) *Planning process.* Prior to the ensuing fiscal year application process, the contractor shall initiate a community planning process with input from community partners including but not limited to authorized agencies in order to identify the needs of the community.

80.4(2) *Alternative plan.* A plan is required for the alternative use of the state grant funds. The plan shall be based on an assessment of the community and shall be submitted by the contractor for approval by the department. The plan shall:

a. Assure the department of the delivery of essential public health services that are the primary purpose of these funds.

b. Identify essential public health services to be delivered.

c. Describe the activity to be delivered.

d. Identify target populations to be served.

e. Identify outcome measures.

80.4(3) *Funder of last resort.* The state grant shall be billed as the last resort.

a. The state grant shall be billed the lower of the authorized agency's cost or charges.

b. The state grant shall not be billed for services eligible for third-party reimbursement (e.g., Medicare, Medicaid, private insurance, approved Iowa waivers, or other federal or state funds).

c. The state grant shall not be billed for the balance between the authorized agency cost or charge, whichever is lower, and the allowed reimbursement from a third-party payer.

d. The state grant shall not be billed for fees waived by the authorized agency.

80.4(4) *Cost analysis.* The authorized agency shall complete, at a minimum, an annual cost analysis, using a method approved by the department. The authorized agency shall maintain documentation to support the administrative cost allocation.

80.4(5) *Fees and donations.* Fees for services and donations shall be used to support local public health services.

a. Fees for services provided shall be based on a financial assessment which determines the consumer's financial responsibility. The financial assessment shall be updated annually by the authorized agency. An authorized agency may consider additional health care-related expenses or resources above $10,000 when determining the consumer fee according to an agency's policy.

b. Sliding fee scale. The authorized agency shall establish a sliding fee scale that considers resources and income. The sliding fee scale shall be based on the charge for services. The authorized agency shall determine placement on the sliding fee scale before the service begins. The authorized agency shall use payments, based on the sliding fee scale, and donations received from consumers to support essential public health services. The following instructions apply to the use of the sliding fee scale:

(1) A fee shall be charged to consumers who have an income at or above 200 percent of federal poverty guidelines.

(2) No fee shall be charged to consumers who have an income at or below 75 percent of federal poverty guidelines and resources of $10,000 or less.

(3) A sliding fee or full fee for home care aide (personal care); home care aide (homemaker), home care aide (home helper) and home care aide (chore); nursing (disease and disability); and nursing (health maintenance) shall be established.

(4) No fee shall be charged for protective services or communicable disease follow-up services.

(5) An authorized agency may charge a fee according to the authorized agency's policy for services other than those described in subparagraph (4) if the consumer has an income below 200 percent but above 75 percent of federal poverty guidelines.

80.4(6) *Reallocation.* The department will annually determine the potential for unused funds from contracts. If funds are available, reallocation of the funds shall be at the discretion of the department.

641—80.5(135) Right to appeal.

80.5(1) *Denial, reduction or termination of services.*

a. When an authorized agency denies, reduces or terminates services funded by the state grant against the wishes of a consumer, the authorized agency shall notify the consumer and the contractor of the following:

(1) The action taken;

(2) The reason for the action; and

(3) The consumer's right to appeal.

b. If a consumer files an appeal, the authorized agency shall provide services to the consumer throughout the appeals process, unless the agency receives a waiver from the department pending the outcome of the appeal.

80.5(2) *Local appeals process.*

a. All contractors and their authorized agencies shall have a written local procedure to hear appeals. The local procedure shall, at a minimum, include:

(1) The method of notification of the right to appeal;

(2) The procedure for conducting the appeal;

(3) Time limits for each step; and

(4) The method of notification of the outcome of the local appeal and notification of the consumer's right to appeal to the state. Notifications of the outcome of the local appeal shall include the facts used to reach the decision and the conclusions drawn from the facts to support the authorized agency's decision.

b. The written appeals procedure and the record of appeals filed (including the record and disposition of each) shall be available for inspection by authorized representatives of the Iowa department of public health.

80.5(3) *Appeal to department.*

a. If a consumer is dissatisfied with the decision of the local appeal, the consumer may appeal to the state. The appeal shall be made in writing by certified mail, return receipt requested, to the Division Director, Division of Health Promotion and Chronic Disease Prevention, Iowa Department of Public Health, Lucas State Office Building, Des Moines, Iowa 50319-0075, within 15 days of the receipt of the local contractor's or authorized agency's appeal decision.

b. Department review. The department shall evaluate the appeal based upon the merits of the local appeal documentation. A department decision affirming, reserving, or modifying the local appeal decision shall be issued within 30 days of the receipt of all local appeal documentation. The department decision shall be in writing and sent by certified mail, return receipt requested, to the consumer and the contractor and the authorized agency.

80.5(4) *Further appeal.* The consumer may appeal the department's decision by submitting an appeal, within 10 days of the receipt of the department decision, to the Division Director, Division of Health Promotion and Chronic Disease Prevention, Iowa Department of Public Health, Lucas State Office Building, Des Moines, Iowa 50319-0075. Upon receipt of an appeal that meets contested case status, the department shall forward the appeal within 5 working days to the department of inspections and appeals pursuant to the rules adopted by the department of inspections and appeals regarding the

transmission of contested cases. The continued process for appeals shall be governed by 641—Chapter 173, Iowa Administrative Code.

641—80.6(135) Case management. Case management is a process optimizing self-care capabilities of consumers and their families in gaining access to needed medical, social, and other services.

80.6(1) *Case manager qualifications.* Individuals performing case management shall meet one of the following criteria:

a. Be a registered nurse licensed to practice in the state of Iowa.

b. Possess a bachelor's degree in family and consumer science, education, social work or other health or human services field.

c. Be a licensed practical nurse with a current Iowa license.

d. Be a home care aide who has an equivalent of two years' experience and who is supervised by an individual who meets one of the criteria in paragraphs *"a"* to *"c."*

80.6(2) *Case management services.* Case management services shall be provided at the direction of the consumer and shall include:

a. An initial assessment of the consumer's needs.

b. Development and implementation of a service plan to meet the identified needs.

c. A team composed of the consumer and the case manager and other entities, such as providers relevant to the consumer's service needs or family members, who may be included at the discretion of the consumer.

d. Face-to-face meetings with the consumer, which shall be held at least quarterly.

e. Coordination and monitoring of delivery of services. Case managers do not provide direct services. Case managers link the consumer to appropriate resources and natural supports.

f. Evaluation of outcomes.

g. Reassessment and revision of the consumer's service plan, which shall be completed as needed, but no less than annually.

h. Advocacy on behalf of the consumer.

i. Communication with the consumer and team members regarding the consumer's progress toward achieving the goals of the service plan.

j. Documentation which supports and demonstrates (1) the consumer's use of the case management process, (2) contacts with the consumer and with providers the consumer is using for services, and (3) other relevant information related to the coordination and delivery of case management services.

k. Monitoring of the consumer's health, safety and welfare.

l. An assurance that the consumer has a choice of providers.

80.6(3) *Consumer records.* Consumer records for case management, at a minimum, shall include the following:

a. An initial assessment;

b. A service plan;

c. Reassessment;

d. An emergency plan;

e. Documentation of the following:

(1) Consumer and family contacts;

(2) The coordination and monitoring of services;

(3) Activities related to delivery of services (i.e., interdisciplinary team meetings);

(4) The evaluation of outcomes.

641—80.7(135) Local board of health services.

80.7(1) *Program purpose.* The purpose of this program is to increase the organizational capacity of county boards of health to develop conditions for healthy people and healthy communities through public health nursing, home care aide, core public health functions and population-based essential public health services in Iowa.

80.7(2) *Program services.* Local board of health services include public health essential services as defined in rule 641—80.2(135).

80.7(3) *Appropriation to county board of health.* The funding supports the efforts of local boards of health in addressing specific health priorities in each county. The appropriation to each county board of health is determined by the following formula: 30 percent of the total allocation shall be divided so that an equal amount is available for use in each county in the state. The remaining 70 percent shall be allocated to each county according to the county's population based on the department's current published vital statistics.

641—80.8(135) Local public health services.

80.8(1) *Program purpose.* The purpose of this program is to increase local public health capacity by implementing core public health functions and essential public health services to address health inequalities. Local public health services address health inequalities by advocating for population-based policies and services to improve the health of the whole population in an equal way.

80.8(2) *Program services.* Local public health services include:

a. Assisting local boards of health in providing services that address health problem priorities identified in each county's health improvement plan.

b. Advancing the goals of Healthy Iowans 2010.

c. Providing financial support for targeted areas of service relating to Iowa's elderly and disabled populations (i.e., home- and community-based services, protective services, nursing (disease and disability), nursing (health maintenance), home care aide (personal care), home care aide (home helper), home care aide (chore) or home care aide (homemaker)).

80.8(3) *Appropriation to county board of health.* The appropriation to each county board of health is determined by the following formula: 40 percent of the total allocation shall be divided so that an equal amount is available for use in each county in the state. The remaining 60 percent shall be allocated to each county according to the county's population based on the department's current published vital statistics.

641—80.9(135) Public health nursing services. Public health nursing is a specialized nursing practice that combines the science and art of public health with the science and art of nursing.

80.9(1) Program purpose. The purpose of this program is to improve the health of the entire community, prevent illness, enhance the quality of life, and provide leadership to safeguard the health and wellness of the community. The program implements core public health functions and essential public health services to reduce, prevent or delay inappropriate institutionalization of consumers and to preserve families.

80.9(2) Scope. The practice of public health nursing is population-based, with the goals of promoting health and preventing disease and disability for all people through the creation of conditions in which people can be healthy. For the purposes of the state grant, public health nursing services include both personal health services and population-based services.

80.9(3) Standards of practice of public health nursing are consistent with the nursing process and include:

a. *Assessment.* The public health nurse assesses the health status of populations using data, community resources identification, input from the population, and professional judgment.

b. *Diagnosis.* The public health nurse analyzes collected assessment data and partners with people to attach meaning to those data and determine opportunities and needs.

c. *Outcome identification.* The public health nurse participates with other community partners to identify expected outcomes in the populations and their health status.

d. *Planning.* The public health nurse promotes and supports the development of programs, policies, and services that provide interventions that improve the health status of populations.

e. *Evaluation.* The public health nurse evaluates the status of the population.

80.9(4) Public health coordinator/supervisor qualifications.

a. Individuals performing public health coordination/supervision shall meet one of the following criteria:

(1) Possess a bachelor's degree or higher from an accredited college or university in public health, health administration, nursing or other applicable field and a minimum of two years of related experience; or

(2) Be a registered nurse, licensed to practice by the Iowa board of nursing, who has a minimum of two years of related experience and has completed a course approved by the department within six months of employment.

b. By January 1, 2008, individuals who hold the position of public health coordinator/supervisor on or before June 30, 2007, shall meet one of the criteria in paragraph *"a."*

80.9(5) Appropriation. The appropriation to each county is determined by the following formula: 25 percent of the total amount to be allocated shall be divided so that an equal amount is available for use in each county in the state. The remaining 75 percent shall be divided so that the share available for use in each county is proportionate to the number of elderly and low-income persons living in the county in relation to the total number of elderly and low-income persons living in the state.

641—80.10(135) Home care aide services. Home care aide services are intended to enhance the capacity of consumers to attain or maintain their independence. Trained and supervised direct care workers provide services to consumers who, due to the absence, incapacity or limitations of the usual homemaker, are experiencing stress or crisis.

80.10(1) Program purpose. The purpose of this program is to reduce, prevent or delay inappropriate institutionalization of consumers and to preserve families through the provision of supportive services by direct care workers who have completed training and are professionally supervised.

80.10(2) Scope. The direct care worker provides services for consumers by following a plan of care identifying assigned tasks. A direct care worker participates in activities to safeguard the health and wellness of the community and to implement core public health functions and essential public health services.

80.10(3) Authorized agency.

a. The authorized agency shall establish policies for supervision of direct care workers.

b. The authorized agency shall ensure that each direct care worker has completed adequate training and demonstrated competency for each task assigned. The required preservice education for direct care workers is outlined in the following chart:

Level of Direct Care Worker	Direct Care Worker I (equivalent to chore)	Direct Care Worker II (equivalent to home helper)	Direct Care Worker III (equivalent to homemaker)	Direct Care Worker IV (equivalent to personal care)	Direct Care Worker V (equivalent to protective worker)
Scope of Services	Provides services to a consumer necessary to enable the consumer to live independently and that encompass heavier cleaning tasks, including outside maintenance and chores. For chore services,	Under the supervision of a professional, provides services to protect the environment for a self-directing consumer to preserve a safe and sanitary home	Under the supervision of a professional, provides services primarily in the homes of consumers who, due to the absence, incapacity or limitations of the usual homemaker or caregiver, are experiencing	Under the direction of nursing or medical staff, provides health-related services such as observation of self-administration of oral medications; checking the consumer's pulse rate, temperature,	Provides services intended to stabilize a child's or adult's residential environment and relationships with relatives, caretakers, and other consumers and household members in order to alleviate a situation involving abuse

Level of Direct Care Worker	Direct Care Worker I (equivalent to chore)	Direct Care Worker II (equivalent to home helper)	Direct Care Worker III (equivalent to homemaker)	Direct Care Worker IV (equivalent to personal care)	Direct Care Worker V (equivalent to protective worker)
	there is no physical contact between the consumer and the direct care worker		stress or crisis, to promote consumer health and a safe, stable, sanitary home environment	and respiration rate; helping with simple prescribed exercises; keeping the consumer's rooms neat; changing nonsterile dressings; providing skin care and back rubs; assisting with braces and artificial limbs; or assisting the consumer in using medical equipment	or neglect or to otherwise protect the child or adult from a threat of abuse or neglect; also provides services intended to prevent situations which could lead to abuse or neglect of a child or adult when a definite potential for abuse or neglect exists
Services or tasks assigned include, but are not limited to:	Heavy household cleaning, garbage removal, snow shoveling, changing light bulbs, putting screens on windows, covering and uncovering air conditioners, lawn care and mowing	Essential shopping and housekeeping	Money management, household management, consumer education, transportation, meal preparation, family preservation, family management, child care, assistance with personal care, respite, essential shopping, and housekeeping	Personal care and rehabilitative therapies	Family preservation, family management, money management, child care, and transportation
Preservice Education	Direct care worker possesses skills for tasks assigned	4 hours on role of the home care aide; 2 hours on communication; 2 hours on understanding basic human needs; 2 hours on maintaining a healthy environment; 2 hours on infection control in the home; and 1 hour on emergency procedures	60-hour home care aide training: A Model Curriculum and Teaching Guide for the Instruction of the Homemaker-Home Health Aide **OR** 75-hour certified nurse aide course and Direct Care Worker II preservice education **OR**	60-hour home care aide training: A Model Curriculum and Teaching Guide for the Instruction of the Homemaker-Home Health Aide **OR** 75-hour certified nurse aide course and Direct Care Worker II preservice education **OR**	Training in a department-approved curriculum

Level of Direct Care Worker	Direct Care Worker I (equivalent to chore)	Direct Care Worker II (equivalent to home helper)	Direct Care Worker III (equivalent to homemaker)	Direct Care Worker IV (equivalent to personal care)	Direct Care Worker V (equivalent to protective worker)
			Home care aide training and prior approval by the department	Home care aide training and prior approval by the department	
Workforce Development (per calendar year)	None	3 hours prorated to employment	12 hours prorated to employment	12 hours prorated to employment	12 hours prorated to employment
Competency	Documented skills for assigned tasks	Documented skills for assigned tasks	Documented skills for assigned tasks	Documented skills for assigned tasks	Documented skills for assigned tasks

80.10(4) Professional staff as providers of home care aide services. An individual who is in the process of receiving or who has completed the training required for LPN or RN licensure or who possesses an associate's degree or higher in social work, sociology, home economics or other health or human services field may be assigned to provide home care aide services if the following conditions are met:

a. Services or tasks assigned are appropriate to the individual's prior training.

b. Orientation to home care is conducted. Orientation includes adaptation of the individual's knowledge and skills from prior education to the home setting and to the role of the home care aide.

80.10(5) Care coordinator and service manager qualifications.

a. An individual performing care coordination or service management shall meet one of the following criteria:

(1) Be a registered nurse licensed to practice in the state of Iowa.

(2) Possess a bachelor's degree in family and consumer science, education, social work or other health or human services field.

(3) Be a licensed practical nurse with a current Iowa license.

b. A home care aide with an equivalent of two years' experience may be delegated care coordination/service management duties as long as a qualified individual who meets one of the criteria in paragraph *"a"* retains responsibility and provides supervision and evidence of supervision.

c. An individual who has provided home care aide care coordination and service management prior to June 30, 2007, shall be considered qualified to continue in the position.

80.10(6) A qualified care coordinator or service manager may provide direct care services as appropriate to the individual's level of education and competency for the assignment.

80.10(7) The service manager's scheduling duty may be delegated to an individual not possessing one of the qualifications in paragraph 80.10(5)*"a"* provided that a qualified individual who meets one of the qualifications in 80.10(5)*"a"* retains responsibility and provides supervision and evidence of supervision.

80.10(8) Consumer records. The authorized agency shall maintain records for each consumer. The records shall include:

a. An initial assessment.

b. A plan of care.

c. Assignment of direct care worker.

d. Assignment of tasks.

e. Reassessment.

f. Update of plan of care.

g. Direct care worker narrative notes.

h. Documented supervision.

80.10(9) Appropriation. The appropriation to each county is determined by the following formula: 15 percent of the total allocation shall be divided so that an equal amount is available for use in each county in the state. The following percentages of the remaining 85 percent shall be allocated to each county according to that county's proportion of state residents with the following demographic characteristics:

a. Sixty percent according to the number of elderly persons living in the county.

b. Twenty percent according to the number of persons below the federal poverty guidelines living in the county.

c. Twenty percent according to the number of substantiated cases of child abuse in the county during the three most recent years for which data is available.

These rules are intended to implement Iowa Code chapter 135.

[Filed emergency 7/1/82—published 7/21/82, effective 7/1/82]
[Filed 1/14/83, Notice 12/8/82—published 2/2/83, effective 3/10/83]
[Filed emergency 3/7/83—published 3/30/83, effective 3/10/83]
[Filed emergency 9/11/85—published 10/9/85, effective 9/11/85]
[Filed 11/27/85, Notice 8/14/85—published 12/18/85, effective 1/22/86]
[Filed emergency 7/1/86—published 7/16/86, effective 7/1/86]
[Filed emergency 9/19/86—published 10/8/86, effective 9/19/86]
[Filed emergency 7/10/87—published 7/29/87, effective 7/10/87]
[Filed emergency 6/25/91—published 7/10/91, effective 7/1/91]
[Filed 7/14/94, Notice 4/27/94—published 8/3/94, effective 9/7/94]
[Filed 9/18/98, Notice 7/15/98—published 10/7/98, effective 11/11/98]
[Filed 3/16/07, Notice 1/31/07—published 4/11/07, effective 7/1/07]

CHAPTER 81
GENERAL RULES FOR MIGRATORY LABOR CAMPS

[Prior to 7/29/87, Health Department[470] Ch 81]

641—81.1(138) Shelters.

81.1(1) *Heating season.* The season requiring artificial heating as provided in Iowa Code section 138.13 is designated as the period between September 15 and June 1.

81.1(2) *Minimum floor space requirements.* The following floor space requirements shall be provided:

a. At least 50 square feet per occupant for sleeping purposes only in family units and dormitory accommodations.

b. At least 40 square feet per occupant for sleeping purposes only in accommodations using double bunk beds.

81.1(3) *Inspection.* The operator of a migrant labor camp shall be in possession of keys to all migrant shelters in order that inspections can be made of the facilities at any reasonable time.

81.1(4) *Register.* A register of all occupants of a migrant labor camp shall be maintained and open to inspection by the Iowa department of public health representatives at all times when the camp is occupied.

81.1(5) *Separate rooms.* Housing used for families with one or more children six years of age or older shall have a room or partitioned sleeping area for the husband and wife. The partition shall be of rigid materials and installed so as to provide reasonable privacy.

81.1(6) *Storage.* Arrangements for hanging clothing and storing personal effects for each person or family shall be provided.

641—81.2(138) Water supply.

81.2(1) *General.*

a. The water supply shall be of a safe bacterial and chemical quality.

b. Where a public water supply is available, such water shall be used in the camp. If a private water source under pressure is provided, the water system shall be capable of delivering at least 35 gallons per person per day to the camp site.

c. Cistern supplies consisting of roof or other surface runoff water shall not be used for drinking or culinary purposes.

d. The adequacy of a well as a source of water for drinking or culinary purposes shall be determined by inspection and bacteriological examination. Defects found by inspection or contaminated samples shall be sufficient grounds for requiring repair, chlorination or condemnation of the well.

e. Water containing 45 or more parts per million nitrates shall not be used for drinking or preparation of formula for infants under one year of age. When the supply contains nitrates in the quantity above, water for infant feeding shall be obtained from another source that has been tested and found to be bacterially satisfactory and contains less than 45 parts per million nitrates. A water supply containing 45 or more parts per million of nitrates shall be placarded or posted stating the water shall not be used for infant feeding.

f. Wooden well platforms or manhole covers are prohibited.

g. Hand-pump bases shall be of the solid one-piece type bolted, including suitable gaskets, secured to the well casing by thread or weld connection. Handpumps secured to the platform by bolts cast in the concrete shall be provided with a rubber or neoprene gasket between the pump base and the platform to ensure a watertight joint.

h. The pump head shall be of a type designed to prevent external water or other contaminating material from entering the water chamber.

i. The pump spout shall be of the closed, downward-directed type.

j. No hand-operated type of pump or cylinder which requires priming shall be used. No pail and rope, bailer, or chain-bucket systems shall be used.

81.2(2) *Existing pump pits.* Existing pump pits may be approved if the construction conforms to the following minimum standards:

a. Walls, floor and top of pit shall be of watertight concrete or masonry construction or equivalent. The well casing shall extend at least 6 inches above the pit floor.

b. A positive seal shall be provided for the annular opening between the casing wall and the drop pipe.

c. A positive drain shall be provided by either a watertight sump and automatic sump pump discharging with at least a 6-inch free fall above the ground surface or an independent drain line discharging to the ground surface above any possible flood level. Pit drains discharging to any other drain or sewer are prohibited.

81.2(3) *Water supply systems.* The water supply system shall be installed so as to prevent backflow of contaminated water from appliances, fixtures, drains and sewers and shall have no cross-connections with any nonpotable supply or any other water supply which does not comply with these requirements.

81.2(4) *Water tanks.* All water to be hauled for a camp shall be obtained from an approved source. All equipment used for hauling or storage of potable water shall be thoroughly cleaned and disinfected with a solution containing at least 200 parts per million of chlorine immediately before use. No equipment, tanks or reservoirs used for hauling or storing potable water shall be used for any other purpose.

641—81.3(138) Waste disposal.

81.3(1) *Solid waste disposal.* Solid waste shall be disposed of in a sanitary disposal project approved by the Iowa department of public health, or if disposed of on the premises, the solid wastes shall be buried so as to create no health hazard or nuisance.

81.3(2) *Liquid waste.*

a. Existing wastewater disposal systems shall be located and constructed so as not to create a nuisance or condition of pollution.

b. Water-carriage toilets shall discharge to a septic tank and solid absorption system or other type disposal system approved by the Iowa department of public health located, designed and constructed in accordance with the specifications set forth in the Iowa department of natural resources' current publication, "Residential Sewage Disposal Systems."

c. A leaching pit or other type disposal system approved by the Iowa department of public health shall be provided to receive the wastes from sinks, laundries, showers and tubs when no septic tank and absorption system is available. Such leaching pits shall be located and constructed in accordance with the specifications set forth in the Iowa department of natural resources' current publication, "Residential Sewage Disposal Systems."

641—81.4(138) Bathing facilities.

81.4(1) Showers shall be supplied with hot and cold water under pressure. Shower enclosures shall be sufficient to provide privacy for the user. An adjacent, enclosed dry area shall be provided for dressing. No duckboards, mats or other such accessories shall be permitted.

81.4(2) Automatic water-heating equipment, or storage tanks with hand-fired heating coils, shall be equipped with combination pressure and temperature relief valves or separate pressure and temperature relief valves. Temperature relief valves shall be located in the top one-eighth or not more than 3 inches above the top of the tank served. Pressure relief valves may be located adjacent to the tank. Gas-fired or other combustion-type water heaters shall be vented to the outside atmosphere.

641—81.5(138) Central dining facilities.

81.5(1) *Physical facilities.* When central dining facilities are provided by a concessionaire, operator or the manager of a camp, the size of the kitchen and dining hall shall be commensurate with the capacity of the housing and shall be separate from the sleeping quarters.

81.5(2) *Requirements.* When central cooking and eating facilities are provided by a concessionaire, operator or the manager of a camp, such facilities shall comply with the laws and rules of the Iowa department of inspections and appeals.

641—81.6(138) Safety and fire.

81.6(1) *Fire exits.*

a. Shelters of one story construction housing less than ten persons shall have two means of escape, one of which may be a readily accessible window with an openable space of at least 24 by 24 inches.

b. Sleeping quarters designed for ten or more persons, central dining facilities and common assembly rooms shall have at least two doors remotely separated so as to provide alternate means of escape.

c. Floors, above the first floor, used for sleeping quarters or common assembly rooms shall have a stairway and a permanent affixed exterior ladder or a second stairway.

81.6(2) *Shelter spacing.* In camps established after July 1, 1972, there shall be at least 10 feet of space in all directions between shelters.

These rules are intended to implement Iowa Code section 138.18.

[Filed 8/31/71]

[Filed emergency 7/10/87—published 7/29/87, effective 7/10/87]

CHAPTER 82
OFFICE OF MINORITY AND MULTICULTURAL HEALTH

641—82.1(135) Purpose. The office of minority and multicultural health exists to actively promote and facilitate health equity for Iowa's multicultural communities.
[**ARC 9775B**, IAB 10/5/11, effective 11/9/11]

641—82.2(135) Definitions. For purposes of this chapter, the following definitions apply:

"Community" is defined as a group of people living in the same locality and under the same government or a group viewed as forming a distinct segment of society.

"Continual cultural competency" is defined as a set of congruent behaviors, attitudes and policies that come together as a system or an agency or among professionals and that enable that system or agency or those professionals to work effectively in cross-cultural situations.

"Department" means the Iowa department of public health.

"Director" means the director of the department of public health.

"Disparity" is defined as the condition or fact of being unequal.

"Diverse" is defined as made up of distinct characteristics, qualities or elements.

"Immigrant" is defined as a person who leaves one country to settle permanently in another.

"Minority" is defined as a part of a population differing from others in one or more characteristics and often subjected to differential treatment. Racial and ethnic minorities are classified as people of African descent (African-American/Black), Hispanic/Latino descent, Asian/Pacific Islander descent, Native American descent, and refugees and immigrants.

"Multicultural" is inclusive of communities of racial, ethnic or linguistic diversity.

"Refugee" is defined as one who flees in search of refuge, as in times of war, political oppression, or religious persecution.

641—82.3(135) Responsibilities of the office of minority and multicultural health. The purpose of the office is to improve the health of racial and ethnic minorities by bridging communication, delivery and service requirements and by providing customized services and practical approaches to problems and issues encountered by organizations and communities working to address the needs of these populations. The office of minority and multicultural health shall provide public health leadership regarding existing or potential issues or practices that can or could affect the health status of racial, ethnic, and linguistic multicultural individuals and families, immigrants and refugees. The office shall provide this leadership through the core functions of (1) education; (2) advocacy; (3) data management; (4) technical assistance and consultation; and (5) training and development. The office is responsible for the following:

82.3(1) Promoting continuous cultural competency in health care practice and education throughout Iowa's public health care sector;

82.3(2) Collecting and providing valid empirical information on the health status of multicultural groups in Iowa;

82.3(3) Advocating for the development of policies and programs that improve the health of Iowa's racially, ethnically and linguistically diverse populations and addressing health disparities that exist within these populations;

82.3(4) Providing technical planning assistance to communities and counties throughout the state and promoting community strategic planning;

82.3(5) Serving as the liaison and advocate for the department on minority and multicultural health matters and advocating for Iowa's racial, ethnic, and linguistic multicultural communities;

82.3(6) Creating and promoting a climate of inclusiveness in the public health sector on state, regional and local levels by partnering with the office's racial, ethnic, and linguistic multicultural constituents in Iowa to help them improve their collective health status;

82.3(7) Promoting the Iowa public health standards and providing technical assistance and consultation regarding state and local criteria relating to disparate populations and delivery of culturally appropriate services; and

82.3(8) Reviewing the impact of programs, regulations and health care resource policies on the delivery of and access to minority and multicultural health services.
[**ARC 9775B**, IAB 10/5/11, effective 11/9/11]

641—82.4(135) Advisory council. A minority and multicultural health advisory council shall be established within the department.

82.4(1) *Membership.* The council shall be composed of no more than 15 voting members appointed by the director.

a. Membership shall include the following:

(1) One representative from each of the six local public health service regions;

(2) One representative from the Meskwaki Settlement;

(3) Public-sector representatives such as legislators and state commissioners;

(4) Service-sector representatives such as representatives from the department of human services, local councils, education, and health care;

(5) Private-sector representatives such as business leaders, representatives from grassroots, nonprofit, faith-based and volunteer organizations, and community leaders.

b. A term of appointment is three years, with no more than three consecutive terms. An exception for individual reappointment from organizations represented shall be determined by the director.

c. The advisory council shall elect a chairperson.

d. In the case of a vacancy, the chairperson shall notify the department of the need to appoint another representative. Vacancies shall be filled in the same manner as original appointments.

e. The advisory council may designate one or more subcommittees to have such powers and perform such duties as may be deemed necessary by the council.

82.4(2) *Duties.* The advisory council shall perform the following duties:

a. Provide advice and make recommendations on diverse racial, ethnic, and linguistic health issues to the department, the office of multicultural health, and policy makers;

b. Provide advice and make recommendations on public policies and practices that affect multicultural communities; and

c. Provide advice and make recommendations on funding that supports the activities of the office of multicultural health.

82.4(3) *Meetings.* The advisory council shall meet at least four times a year to conduct its business. Meetings may be scheduled more frequently as business requires.

a. Notice of meetings and agenda shall be made available to council members a minimum of five working days prior to the meeting.

b. The operation of council meetings shall be governed by the following rules of procedure:

(1) A majority of the members of the council shall constitute a quorum.

(2) Action can be taken by a vote of the majority of the members of the council.

(3) Robert's Rules of Order shall govern at all meetings.

c. All meetings are open to the public in accordance with the open meetings law, found at Iowa Code chapter 21.

82.4(4) *Absences.* Three consecutive unexcused absences shall be grounds for the director to consider dismissal of the advisory council member and to appoint another. The chairperson of the advisory council is charged with providing notification of absences.

82.4(5) *Minutes.* The advisory council shall keep minutes of all its meetings showing the date, time, place, members present, members absent, and the general topics discussed.

a. The minutes shall reflect the actions agreed upon by the members for topics requiring the members' input or consensus.

b. The minutes shall be provided to the members of the advisory council prior to the next scheduled meeting.

c. The minutes shall be available at the office of multicultural health for inspection Monday through Friday from 8:30 a.m. to 4:30 p.m. with the exception of holidays.

82.4(6) *Expenses of the council.* The following may be considered necessary expenses for reimbursement of advisory council members when incurred on behalf of advisory council business and are subject to established state reimbursement rates:

a. Reimbursement for travel in a private car.

b. Actual lodging and meal expenses, including sales tax on lodging and meals.

c. Actual expenses for public transportation.

[**ARC 9775B**, IAB 10/5/11, effective 11/9/11]

These rules are intended to implement Iowa Code section 135.12.

[Filed 5/14/08, Notice 3/26/08—published 6/4/08, effective 7/9/08]

[Filed ARC 9775B (Notice ARC 9634B, IAB 7/27/11), IAB 10/5/11, effective 11/9/11]

CHAPTER 83
EARLY CHILDHOOD IOWA COUNCIL
Rescinded IAB 6/2/10, effective 7/7/10

CHAPTER 84
STATE SUBSTITUTE MEDICAL DECISION-MAKING BOARD
Rescinded IAB 6/2/10, effective 7/7/10

CHAPTER 85
LOCAL SUBSTITUTE MEDICAL DECISION-MAKING BOARDS

641—85.1(135) Purpose. The purpose of this chapter is to establish the requirements and procedures for local substitute medical decision-making boards. Counties may establish local substitute medical decision-making boards for patients who are incapable of making their own medical care decisions and who have no other surrogate decision maker available. If the patient has designated an individual to have durable power of attorney for health care or has a guardian or has family members who are reasonably available, willing and able to make medical care decisions, the case should not be submitted to the substitute medical decision-making board. If the patient has provided advance directives which cover the proposed care, the case should not be submitted to the board.

641—85.2(135) Definitions. For the purpose of these rules, the following definitions shall apply:

85.2(1) *"Conflict of interest"* means a standard which precludes the participation of a panel member in the proceedings with regard to a patient whenever the panel member is a relative of the patient, is a direct care provider of the patient or has a financial interest in the patient.

85.2(2) *"Correspondent"* means a person other than a relative of the patient who has demonstrated a genuine interest in promoting the best interest of a patient by having a personal relationship with the patient, by participating in the planning of a patient's care and treatment, by regularly visiting the patient, or by regularly communicating with the patient.

85.2(3) *"Department"* means Iowa department of public health.

85.2(4) *"Local board"* means a local substitute medical decision-making board established under Iowa Code section 135.29.

85.2(5) *"Medical care"* means care a reasonably prudent person would consider to be medically necessary. It includes, but is not limited to, procedures which involve any significant invasion of bodily integrity requiring an incision or producing substantial pain, discomfort, debilitation or which has a potential for significant bodily harm. This includes, but is not limited to, any medical, surgical or diagnostic intervention or procedure for which a general anesthetic is used. Medical care may include placement decisions where there is inadequate time to obtain appointment of a guardian and the placement is a medical consideration or a medical necessity.

The definition does not include discontinuance of medical treatment which is sustaining life functions because the board does not have authority to make this decision.

The definition also does not include the following types of care which can ordinarily be provided without special approval and do not need to be submitted to the board for consideration:

a. Routine office-based care or routine dental care;

b. Routine diagnosis or treatment such as extraction of bodily fluids for analysis, administration of medications or routine activities of daily living support;

c. Any procedure which is provided under emergency circumstances.

85.2(6) *"Other surrogate decision maker"* means an attorney-in-fact, guardian, spouse, adult child, parent or an adult sibling who is reasonably available, willing and able to make a medical care decision.

85.2(7) *"Panel"* means a group of three or more members of a local board who are appointed by the chairperson of that board to hear a case when an application has been filed with the board.

85.2(8) *"Patient"* means the person for whom the medical care decision is proposed. They may be in a hospital, long-term care facility, home, or other setting.

85.2(9) *"Person incapable of making their own medical care decisions"* means a patient who is unable to adequately understand and appreciate the nature and consequences of a proposed medical care decision, including the benefits and risks of the proposed medical care and of alternatives to such care, and cannot thereby reach an informed decision to consent or refuse such care in a knowing and voluntary manner that promotes the patient's well-being and autonomy. This incapability may be temporary or permanent.

85.2(10) *"Physician"* means any individual licensed under Iowa Code chapter 148.

85.2(11) Rescinded IAB 4/4/12, effective 5/9/12.
[**ARC 0061C**, IAB 4/4/12, effective 5/9/12]

641—85.3(135) Appointment of local boards.

85.3(1) The county board of supervisors may establish and fund a local substitute medical decision-making board. The board shall include one or more representatives from each of the following three categories:

a. Physicians, nurses, or psychologists licensed by the state of Iowa.

b. Attorneys admitted to the practice of law in Iowa or social workers.

c. Other individuals with recognized expertise or interest in persons unable to make their own medical care decisions not included in *"a"* and *"b"* above.

The county board of supervisors may appoint and fund a hospital ethics committee to serve as the local decision-making board provided that the composition of the committee fulfills the above requirements.

85.3(2) County boards of supervisors may join together to form a multicounty local substitute medical decision-making board pursuant to Iowa Code chapter 28E. If a multicounty board is established, the agreement shall specify the procedure for appointment of board members and the procedure for allocation of expenses.

85.3(3) Board members shall be appointed to terms of three years with staggered terms.

85.3(4) The board shall elect a chairperson at the first meeting of each fiscal year.

85.3(5) The county board of supervisors shall notify the department when a local board is appointed and shall submit a list of the members appointed.
[**ARC 0061C**, IAB 4/4/12, effective 5/9/12]

641—85.4(135) Filing an application.

85.4(1) Any person having knowledge and concern may file the application on behalf of any patient residing within the geographic area served by the local board, when the person filing the application believes the patient is incapable of decision making, is in need of medical care, and has no other surrogate decision maker available.

85.4(2) The local board of the county of residence of the patient shall have jurisdiction except the local board may, by mutual consent, transfer jurisdiction to the local board in the county where the treatment is being considered.

85.4(3) The application shall be made in writing and shall include the following:

a. The relationship of the person filing the application to the patient.

b. A statement that the patient does not have an attorney-in-fact, guardian, spouse, adult child, parent or an adult sibling who is reasonably available, willing and able to make the medical care decision. The application shall provide the factual basis for such a statement, including the efforts made to contact such persons.

c. The reasons for believing that the person lacks the capability to consent to or refuse medical care and the factual basis supported by an appropriate statement for this belief.

d. The patient's opinion regarding the proposed care, if known, and the source(s) of the information regarding this opinion.

e. If the patient's opinion regarding the proposed care is not known, the person filing the application shall include a stated opinion on whether the best interests of the patient would be promoted by such care and the basis for the opinion.

f. Any other information that may be necessary to determine the need for such care, including a copy of a second medical or dental opinion which would be required by a prudent physician or dentist based on the nature of the proposed medical care.

g. A statement, completed, signed and dated by a physician or dentist including:

(1) A description of the proposed medical care and the patient's medical or dental condition which requires such treatment indicating the date of diagnosis;

(2) The risks and benefits to the patient of the proposed care and any alternative treatments including consideration and consequences of nontreatment; and

(3) A statement whether the patient has any medical or dental condition which would prevent the patient's travel to or presence at the panel meeting and including a description of such condition.

h. The application shall be signed and dated by the person filing it stating that the information on the application is true to the best of that person's knowledge, except for any portion signed and dated by another person who shall make a similar statement as to that portion.

641—85.5(135) Notification of patient and review of application.

85.5(1) When an application is received, the patient shall be notified that an application has been submitted, a hearing will be scheduled, and the patient will be notified of the time and place of the hearing. The notification shall inform the patient of the right to be present, to testify orally or in writing, and to designate someone to represent the patient at the hearing. The hearing shall be held no less than 48 hours after the patient receives this notification.

85.5(2) The board chairperson or designee shall preliminarily review the application to ascertain whether additional information may be necessary to assist the board in determining the patient's need for surrogate decision making and in determining whether the patient's best interests will be served by consenting to or refusing medical care on the patient's behalf. The board chairperson or designee may:

a. Request and shall, not withstanding any other law to the contrary, be entitled to receive from any physician, hospital or health care facility or person licensed to render health care, any information which is relevant to the patient's need for surrogate decision making or for the proposed medical care. Such information may include, among other things: information regarding the patient's preferences regarding medical care; facts regarding the patient's attorney-in-fact, guardian, spouse, adult child, parent, or an adult sibling; facts and professional opinions regarding the patient's inability to consent to or refuse medical care; and facts and professional opinions regarding whether the proposed medical care is in the patient's best interests; the board chairperson or designee shall maintain the confidentiality of records as required by Iowa Code chapters 22, 141, and 228, and 42 Code of Federal Regulations Part 2, as of January 1, 1992, or any other applicable confidentiality law provision;

b. Consult with any other person who might assist in such a determination of the best interests of the patient, including ascertainment of the personal beliefs and values of the patient.

641—85.6(135) Panel appointment and procedures.

85.6(1) When an application is filed, the chairperson shall appoint a panel to handle the case and designate a panel chairperson. The panel shall consist of at least three members with at least one from each category listed in rule 85.3(135). A person shall not participate on a panel for a case when that person has a conflict of interest. The panel may include the entire local board.

85.6(2) Upon appointment of the panel, the board chairperson or designee shall provide a copy of the application to each panel member accompanied by a notice of the time, place and date of the panel hearing on the application. The notice of the hearing shall also be provided to the patient, the person who filed the application, and any other interested party, if known. The notice shall inform the recipients of the procedures of the panel, including the opportunity for the recipient to be present and to be heard. The notice shall be given no less that 24 hours prior to the scheduled time for the hearing.

85.6(3) The general procedures of the hearing are as follows:

a. The panel shall be empowered to administer oaths and take testimony from any person who might assist the panel in making its decision. It shall also be empowered to conduct its proceeding via telephone conference calls in appropriate cases, unless someone objects and requests a face-to-face hearing.

b. A record of the deliberations and proceedings of the panel shall be made and retained for ten years. Such record shall include any information, record, assessment or consultation submitted to or considered by the panel.

c. The panel and each member of the local board shall maintain the confidentiality of records as required by Iowa Code chapters 22, 141, and 228 and 42 Code of Federal Regulations Part 2 or any other applicable confidentiality law provision.

d. The patient shall have the right to be present at the hearing and the right to express feelings to the panel orally or in writing and the right to designate someone to represent the patient before the panel.

e. If at any time during the pendency or prior to initiation of treatment, an attorney-in-fact, guardian, spouse, adult child, parent or an adult sibling is reasonably available, willing and able to consent to or refuse such care on the patient's behalf, objects to the panel acting upon the application, the proceedings regarding such patient shall cease. A record of any such person's objection shall be included as part of the record as provided for by this section.

f. The panel shall issue its written decision within 24 hours after the conclusion of the hearing. The decision shall state when the decision shall become effective and shall include a statement describing the right of appeal. The written decision shall be issued to the necessary persons, including the patient.

g. If the decision is hand-delivered, it shall not be effective sooner than 24 hours after the written decision is delivered to the patient or the person designated by the patient in 85.6(3)*"e."* If the decision is sent by certified mail, return receipt requested, it shall not be effective sooner than 48 hours after it is mailed. The date, time, and method of delivery of the decision to the patient shall be noted in the record.

h. A panel determination that a patient is in need of surrogate decision making for the proposed medical care shall not be valid for any future medical care and shall not be construed or deemed valid for any other purpose or for any other future medical care unless the determination explicitly applies to related or continuing treatment necessitated by the original treatment. No panel determination shall be valid after 60 days from its effective date unless the determination explicitly states otherwise.

i. All information, records, assessments or consultations submitted to or considered by the panel or board and the panel and board deliberations are confidential as required by Iowa Code chapters 22, 141, and 228 and 42 Code of Federal Regulations Part 2 or any other applicable confidentiality law provision.

641—85.7(135) Panel determination of need for surrogate decision making. The panel's determination of the patient's need for surrogate decision making shall be made in accordance with the following provisions:

85.7(1) The panel shall decide based upon a preponderance of evidence whether the patient is in need of surrogate decision making by determining that the patient: lacks the ability to consent to or refuse the proposed medical care and does not have an attorney-in-fact, guardian, spouse, adult child, parent, or an adult sibling who is reasonably available, willing and able to make such a decision.

The method of determining patient's capability to consent to or refuse care shall include examination of patient by a licensed physician with a written report to the local board.

When practical, the panel members shall personally interview and observe the patient as a part of the hearing. If a personal appearance by the patient before the panel is not practical, then either the panel chairperson shall designate a member of the panel to interview and observe the patient prior to the hearing or the panel shall require one of the following:

1. Written report of examination by psychiatrist.
2. Written report of examination by psychologist.
3. Written report of examination by physician not involved in case.
4. Written report from a department of human services investigator involved with patient.
5. Written report from long-term care case management project.

85.7(2) In making the determination of whether the patient lacks the capacity to consent to or refuse the proposed medical care, the panel or board shall consider whether the patient is unable to adequately understand and appreciate the nature and consequences of the proposed medical care.

85.7(3) A majority of the panel members must vote in the affirmative that the patient is in need of surrogate decision making or the patient will be deemed not to need surrogate decision making.

85.7(4) A panel determination that a patient is in need of surrogate decision making shall not be construed or deemed to be a legal determination that such person is incompetent.

85.7(5) In the event the panel or board has determined the patient to be capable of decision making, then the patient's consent to or refusal of such treatment, if given, shall constitute valid consent or refusal. No other consent shall be required by a provider of health services.

641—85.8(135) Panel determination regarding proposed medical care decision. If a patient has been determined by the panel to be in need of surrogate decision making, the panel's determination regarding the proposed medical care shall be made in accordance with the following provisions:

85.8(1) The past or present expression of wishes by the patient will be presumed valid unless clearly overcome by other evidence. The patient's autonomy should always be respected.

85.8(2) If there is no clear preference by the patient, the panel shall make the determination whether the proposed medical care is in the best interests of the patient based upon a preponderance of the evidence by considering the following standards:

a. The burdens of the treatment to the patient in terms of pain and suffering outweighing the benefits or whether the proposed treatment would merely prolong the patient's suffering and not provide any net benefit;

b. The degree, expected duration, and constancy of pain with and without treatment, and the possibility that the pain could be mitigated by less intrusive forms of medical treatment including the administration of medications;

c. The likely prognosis, expectant level of functioning, degree of humiliation and dependency with or without the proposed medical care; and

d. Evaluation of treatment options, including nontreatment, and their benefits and risks compared to those of the proposed medical care.

85.8(3) A majority of the panel members must vote in the affirmative for a valid determination of consent to or refusal of medical care on behalf of the patient.

85.8(4) The panel determination consenting to or refusing medical care shall constitute valid consent to or refusal of such treatment in the same manner and to the same extent as if the patient were able to consent or refuse on the patient's own behalf.

85.8(5) The panel's consent to medical care shall state that any tissues or parts surgically removed may be disposed of or preserved by the provider of health services in accordance with customary practice.

641—85.9(135) Right of appeal.

85.9(1) The patient, the person who filed the application, or a correspondent may appeal the local board's decision to the department. The appeal must be made before the date and time that the consent becomes effective. The person appealing shall notify the local board or the department of the appeal. The notice of the appeal shall be in writing or by telephone followed by a written appeal to the department. If the appeal is initially made by telephone, the written appeal to the department shall be postmarked within 48 hours of the telephone notice. The written appeal shall state the reason for the appeal. If the initial appeal is made to the local board, the local board representative shall immediately notify the department and the health care provider. If the initial appeal is made to the department, the department representative shall immediately notify the local board and the health care provider.

85.9(2) Upon receipt of the notice of appeal, the local board shall immediately provide a copy of the record of the case to the department. The department shall review the record to determine whether the determination by the local panel is supported by substantial evidence. The department shall also review new information which is submitted regarding the case. The department's decision shall be based on a review of the record and a review of any new information and shall be made in accordance with the provisions for local panel determination in rules 641—85.7(135) and 641—85.8(135). The department's decision shall be promptly sent by certified mail, return receipt requested, or otherwise provided by any other means that will provide more timely or reliable written notice to: the patient, the person filing the appeal, the person who filed the application and the chairperson of the local board. If any of these persons are dissatisfied with the department's decision, an appeal may be taken in the manner provided by Iowa Code chapter 17A.

[**ARC 0061C**, IAB 4/4/12, effective 5/9/12]

641—85.10(135) Records and reports. Each fiscal year, prior to October 1, the local board shall submit an annual report to the department on forms provided by the department. The report shall include summary information regarding the number, nature and disposition of applications filed with the local

board in the preceding year. It shall also include a list of the local board members and officers for the new year and such other information as the department may deem necessary. Authorized representatives of the department shall have access to all records of the local boards. All record information which is excluded from public access and inspection pursuant to Iowa Code chapter 22, 141A or 228 and 42 Code of Federal Regulations Part 2, or any other confidentiality law provision shall be respected by the department.
[**ARC 0061C**, IAB 4/4/12, effective 5/9/12]

641—85.11(135) Liability. The local substitute medical decision-making board and its members shall not be held liable, jointly or separately, for any actions or omissions taken or made in the official discharge of their duties, except those acts or omissions constituting willful or wanton misconduct.
[**ARC 0061C**, IAB 4/4/12, effective 5/9/12]

These rules are intended to implement Iowa Code section 135.29.

[Filed 5/7/92, Notice 2/19/92—published 5/27/92, effective 7/1/92][1]
[Filed 1/14/94, Notice 11/24/93—published 2/2/94, effective 3/9/94]
[Filed 3/14/03, Notice 2/5/03—published 4/2/03, effective 5/7/03]
[Filed ARC 0061C (Notice ARC 9976B, IAB 1/25/12), IAB 4/4/12, effective 5/9/12]

[1] Effective date of 7/1/92 delayed 70 days by the Administrative Rules Review Committee at its meeting held June 10, 1992; delay lifted by the Committee at its meeting held July 15, 1992.

CHAPTER 86
PLACES WHERE DEAD HUMAN BODIES ARE PREPARED FOR BURIAL OR ENTOMBMENT

[Prior to 7/29/87, Health Department[470] Ch 86]

641—86.1(156) Purpose. The purpose of this chapter is to establish standards for the operation and inspection of places where dead human bodies are prepared for burial, cremation or entombment.

641—86.2(156) Definitions.

"Board" means the board of mortuary science examiners.

"Cremated remains" means the body of a deceased person, including any form of body prosthesis that has been permanently attached to or implanted in the body.

"Cremation" means the technical process, using heat and flame, that reduces human remains to bone fragments. The reduction takes place through heat and evaporation. Cremation shall include the processing, and may include the pulverization, of the bone fragments.

"Cremation chamber" means the enclosed space within which the cremation takes place.

"Cremation establishment" means a place of business which provides any aspect of cremation of human remains.

"Cremation room" means the room in which the cremation chamber is located.

"Department" means the Iowa department of public health.

"Funeral establishment" means a place of business, as defined by the board of mortuary science examiners, devoted to providing any aspect of mortuary science.

"Human remains" means a deceased human being for which a death certificate or fetal death certificate is required.

"Listed" means equipment or materials included in a list published by an agency that maintains periodic inspection on current production of listed equipment or materials and whose listing states either that the equipment or material complies with approved standards or has been tested and found suitable for use in a specified manner.

"Preparation room" means a room in a funeral establishment where human remains are prepared, sanitized, embalmed or held for ceremonies and final disposition.

641—86.3(156) Licensing. No person, business or corporation shall operate a funeral establishment, preparation room or cremation chamber without first licensing the establishment with the board.

641—86.4(156) Public access areas. Public access areas of funeral homes and crematorium establishments shall have a public rest room with hot and cold running water.

641—86.5(156) Preparation room. The preparation room shall meet the following standards:

86.5(1) The preparation room shall be of such size and dimensions to accommodate and shall contain an embalming table, an appropriate sink, or other liquid waste receptacle with sewer and water connections, suitable cabinet or shelves, and hand-washing facilities to include hot water, soap and towels.

86.5(2) The preparation room shall be private. It shall not be used as a passageway from room to room. No toilet or commode shall be located within the preparation room. Only equipment necessary for use in preparation of bodies for burial, shipment or cremation shall be permitted in the preparation room.

86.5(3) There shall be a toilet and hand-washing facility accessible elsewhere in the building.

86.5(4) Ventilation shall be provided by an exhaust fan vented to the outside of the building.

86.5(5) Doors and windows of the preparation room shall be so installed and constructed as to obstruct view from outside and to prevent fumes and odors from entering any other part of the building.

86.5(6) There shall be adequate lighting. Light fixtures shall be easy to clean and kept clean.

86.5(7) The preparation room shall be provided with an adequate water supply with hot and cold running water.

86.5(8) The building drainage system must be discharged into the municipal sewage system where such a system is available. Where a municipal sewage system is not available, the building drainage system must be discharged into a private system of waste disposal acceptable to the Iowa department of natural resources and the Iowa department of public health.

86.5(9) Backflow prevention.

a. Funeral homes not meeting the requirements of 86.5(9)*"c"* shall have water-supplied aspirators equipped with a listed atmospheric vacuum breaker mounted at least six inches above the aspirator. The discharge of the aspirator shall be through an air gap.

b. Funeral homes not meeting the requirements of 86.5(9)*"c"* shall have hose bibbs protected by a listed nonremovable hose bibb type backflow preventer. Potable water outlets with a tube connection fitting shall be protected by a listed atmospheric vacuum breaker mounted at least six inches above the highest point of water usage.

c. In new construction, the water supply to the preparation room and to fixtures in the preparation room shall be protected against backflow in accordance with the Iowa state plumbing code (641—Chapter 25) or in accordance with the ordinance of the political subdivision in which the facility is located, provided that the requirements of the ordinance are equal to or greater than the requirements of the Iowa state plumbing code.

86.5(10) The embalming table shall have a top composed of stainless steel, porcelain or other rustproof material, and the edges shall be raised at least three-fourths inch around the entire table. There shall be a drain opening in the table.

86.5(11) Each preparation room shall have a covered, watertight receptacle for solid refuse.

86.5(12) All preparation rooms shall be maintained in a clean and sanitary condition. All embalming tables, sinks, receptacles, instruments and other appliances used in embalming dead human bodies shall be thoroughly cleaned with hot water and disinfectant. There shall be available a suitable means to sterilize instruments.

641—86.6(156) Crematorium chambers.

86.6(1) Cremation chambers shall be installed according to the manufacturer's recommendations.

86.6(2) Cremation chambers shall be vented to the outside of the building.

86.6(3) There shall be a means to bring in a fresh air supply to aid in combustion.

86.6(4) The room where the cremation chamber is located shall have adequate exhaust to prevent heat buildup.

86.6(5) The cremation chamber shall be cleaned after each use, with cremated remains and pulverized materials being placed in containers as defined in 645—100.1(156).

641—86.7(156) Inspection fees. Inspection fees shall be billed to the owner of a funeral home or crematorium upon the completion of an inspection. Inspection fees are due upon receipt of a notice of payment due. When the funeral home or crematorium is located within the contracted area of a board of health that has a 28E agreement for inspections with the department, inspection fees billed shall be paid to the contracted board of health or its designee.

86.7(1) The fee for the inspection of a funeral home or crematorium shall be $15 for each facility.

86.7(2) Penalty. Inspection fees not received by the department or contracted board of health within 45 days of the date of billing will be assessed a $25 penalty for each month or fraction thereof that the payment is delinquent.

These rules are intended to implement Iowa Code chapter 156.

[Filed 6/9/70]

[Filed 1/18/79, Notice 12/13/78—published 2/7/79, effective 4/1/79]

[Filed emergency 7/10/87—published 7/29/87, effective 7/10/87]

[Filed 2/26/98, Notice 9/10/97—published 3/25/98, effective 4/29/98]

CHAPTER 87
HEALTHY FAMILIES IOWA (HFI)

641—87.1(135) Purpose. These rules are intended to establish standards for the healthy families Iowa (HFI) program, a family support program that provides services to families and children during the prenatal to preschool years through home visitation. This program shall be identified as healthy opportunities for parents to experience success—healthy families Iowa (HOPES-HFI). The HOPES-HFI program is intended to promote optimal child health and development; improve family coping skills and functioning; promote positive parenting skills and intrafamilial interaction; and prevent child abuse and neglect and infant mortality and morbidity. These rules outline the process by which the department assists the Iowa empowerment board in managing contracting for HOPES-HFI funds.

641—87.2(135) Definitions. For the purpose of these rules, the following terms shall have the meaning indicated in this rule:

"Accreditation" means national recognition of compliance with Healthy Families America standards through a peer review process.

"Applicant" means a governmental or nonprofit agency that received grant funds in the previous fiscal year, is fully accredited by Healthy Families America, and applies to the department during a competitive year. In any year in which expansion funds are available for the HOPES-HFI program, the department shall award new grants, subject to annual renewal, to selected applicants in a competitive process.

"Competitive grant" means the competitive grant application process to determine the grant awards for a project period.

"Contractor" means a governmental or nonprofit agency that holds a contract with the department to provide HOPES-HFI services.

"Department" means the Iowa department of public health.

"Family support" means community-based services to promote the well-being of children and families.

1. Family support programs have the following characteristics:
- Family-driven, meaning there is a true partnership with families.
- Comprehensive, flexible, and individualized for each family based on the family's culture, needs, values and preferences.
- Build on strengths to increase the stability of family members and the family unit.
- Utilize informal and formal support networks.

2. Family support programs produce the following results:
- Increased parent confidence and competence in parenting abilities.
- Safe, stable, and supportive families who are connected to their communities.
- Enhanced health, growth, and development of children and adults in the family unit.

"Healthy Families America" or *"HFA"* means a research-based national program model designed to help overburdened families. HFA is a family support program that provides services to families and children during the prenatal to preschool years through home visitation.

"Healthy families Iowa" or *"HFI"* means the state family support program that provides services to families and children during the prenatal to preschool years through home visitation.

"Home visitation" means a face-to-face interaction that occurs between the participant(s) and home visitor. The goals of the home visit are to promote positive parent-child interaction and healthy childhood growth and development and to enhance family functioning. Typically, home visits occur in the home, lasting a minimum of an hour, and the child is present.

"HOPES-HFI" means the healthy opportunities for parents to experience success—healthy families Iowa program. The HOPES-HFI program is intended to promote optimal child health and development; improve family coping skills and functioning; promote positive parenting skills and intrafamilial interaction; and prevent child abuse and neglect and infant mortality and morbidity.

"Nonprofit" means an entity that meets the requirement for tax-exempt status under Internal Revenue Code Section 501(c)(3) or 501(c)(4).

"Participant" means a family voluntarily enrolled in and receiving services from the program.

"Project period" means the period of time the department intends to support the project without requiring competition for funds.

641—87.3(135) Applicant eligibility. Governmental or nonprofit agencies that received grant funds in the previous fiscal year, are fully accredited by HFA, and apply to the department during a competitive year are eligible applicants for funding. The purpose of the applications is to administer HOPES-HFI services for a specified project period, as defined in the request for proposals, with an annual continuation application.

641—87.4(135) Participant eligibility. Families must meet the following requirements to be eligible to participate in the HOPES-HFI program: (1) A family member is pregnant or the family has a child aged birth to five years; and (2) The family is determined to be eligible for enrollment according to a universal risk assessment as defined by HFA standards.

641—87.5(135) Program requirements. Contractors shall meet the following minimum program requirements:

87.5(1) *Accreditation.* Contractors shall comply with Healthy Families America (HFA) standards and maintain HFA or Council on Accreditation (COA) accreditation status. HOPES-HFI contractors will be required to submit evidence of reaccreditation reports to the department within 30 days of receipt.

87.5(2) *Participant identification.* Contractors shall collaborate with health care, human services, education, and other partners serving pregnant women and women of childbearing age to identify families who are at risk in order to promote positive birth and parenting outcomes.

87.5(3) *Standardized tools.* Contractors shall utilize standardized tools approved by the department to assess and reassess a participant's risk status and achievements and the appropriate level of service.

87.5(4) *Quality assessment and improvement.* Contractors shall develop a process for annual program evaluation. The process shall include the following:

a. The outcome of the program evaluation shall be reviewed by the program's governing or advisory board with recommendations made for program improvement.

b. The evaluation shall demonstrate the effectiveness of the program through program outcomes, including acceptance and retention rates.

641—87.6(135) Contractor assurance. In order to receive funding, the contractor shall provide to the department assurance that all applicable federal, state, and local requirements are met. The contractor shall ensure compliance with Title IV of the Civil Rights Act, the Americans with Disabilities Act of 1990 (ADA), Section 504 of the 1973 Rehabilitation Act, and all affirmative action requirements. In addition, the contractor shall ensure the following:

87.6(1) *Program policies and procedures.* Policies and procedures shall be in accordance with HFA standards.

87.6(2) *Personnel policies and procedures.* The personnel policies and procedures shall, at a minimum, include:

a. Conditions of employment, including recruitment, selection, termination, promotion, and compensation.

b. A leave of absence policy.

c. A grievance procedure.

d. Annual employee performance evaluations.

e. A nondiscrimination policy.

f. Fringe benefits.

g. Employment application forms that comply with civil rights regulations.

h. Current job descriptions that delineate qualifications, responsibilities, and essential functions, that reflect current responsibilities, and that are dated.

i. A current salary schedule.

87.6(3) *Fiscal management.* Fiscal management shall, at a minimum, include the following:

a. An annual budget.

b. Fiscal policies and procedures that follow generally accepted accounting practices.

c. Utilization of other funds such as private and third-party funds when available.

641—87.7(135) Applicant appeal process.

87.7(1) *Right of appeal.* The right to appeal shall be granted when an applicant's application to participate is denied. The right to appeal shall also be granted when, during the course of the contract or agreement period, a contractor is disqualified or any other action that affects participation is taken. For participating contractors, a minimum of 60 days' advance notice shall be given before the effective date of the action.

87.7(2) *Request for hearing.* An appeal is brought by filing a written request for a hearing with the Division Director, Division of Health Promotion and Chronic Disease Prevention, Iowa Department of Public Health, Lucas State Office Building, Des Moines, Iowa 50319-0075, within ten days of receipt of notification of the adverse action. The written request for hearing shall state the adverse action being appealed.

87.7(3) *Contested cases.* Upon receipt of an appeal that meets contested case status, the appeal shall be forwarded within five working days to the department of inspections and appeals pursuant to the rules adopted by that agency regarding the transmission of contested cases. The information upon which the adverse action is based and any additional information that may be provided by the aggrieved party shall also be provided to the department of inspections and appeals.

87.7(4) *Notice of hearing.* The administrative law judge (ALJ) shall schedule the time, place and date of the hearing as expeditiously as possible. Hearings shall be conducted by telephone or in person in Des Moines at the Lucas State Office Building or another suitable location. If necessary, parties will be provided at least two opportunities to have the hearing rescheduled.

87.7(5) *Conduct of hearing.* The hearing shall be conducted according to the procedural rules of the department of inspections and appeals found in 481—Chapter 10, Iowa Administrative Code.

87.7(6) *Decision.* A written decision of the ALJ shall be issued, when possible, within 60 days from the date of the request for a hearing unless the parties agree to a longer period of time. The decision of the ALJ shall be served by certified mail, return receipt requested, or delivered by personal service. That proposed decision and order then becomes the department's final agency action, without further proceedings, ten days after it is received by the aggrieved party unless an appeal to the director is filed as provided in subrule 87.7(7).

87.7(7) *Appeal to director.* Any appeal to the director for review of the proposed decision of the ALJ shall be filed in writing and mailed to the Director, Iowa Department of Public Health, Lucas State Office Building, Des Moines, Iowa 50319-0075, by certified mail, return receipt requested, or delivered by personal service within ten days after the receipt of the ALJ's proposed decision by the aggrieved party. A copy of the appeal shall also be mailed to the ALJ. Any request for an appeal shall state the reason for appeal.

87.7(8) *Record of hearing.* Upon receipt of an appeal request, the ALJ shall prepare the record of the hearing for submission to the director of the department. The record shall include the following:

a. All pleadings, motions, and rules.

b. All evidence received or considered and all other submissions by recording or transcript.

c. A statement of all matters officially noticed.

d. All questions and offers of proof, objections and rulings thereon.

e. All proposed findings and exceptions.

f. The proposed decision and order of the hearing officer.

87.7(9) *Decision of director.* The decision and order of the director becomes the department's final agency action upon receipt by the aggrieved party and shall be delivered by certified mail, return receipt requested, or by personal service.

87.7(10) *Exhausting administrative remedies.* It is not necessary to file an application for a rehearing to exhaust administrative remedies when appealing to the director or the district court as provided in Iowa Code section 17A.19. The aggrieved party to the final decision of the department who has exhausted all administrative remedies may petition for judicial review pursuant to Iowa Code chapter 17A.

87.7(11) *Petition for judicial review.* Any petition for judicial review of a decision and order shall be filed in the district court within 30 days after the decision and order becomes final. A copy of the notice of appeal shall be sent to the department by certified mail, return receipt requested, or by personal service. The address is: Division Director, Division of Health Promotion and Chronic Disease Prevention, Iowa Department of Public Health, Lucas State Office Building, Des Moines, Iowa 50319-0075.

641—87.8(135) Participant right to appeal.

87.8(1) *Denial, reduction or termination of services.*

a. When a contractor denies, reduces or terminates services funded by the HOPES-HFI grant against the wishes of a participant, the contractor shall notify the participant of the following:

(1) The action taken;

(2) The reason for the action; and

(3) The participant's right to appeal.

b. If a participant files an appeal, the contractor shall provide services to the participant throughout the appeals process, unless the contractor receives a waiver from the department pending the outcome of the appeal.

87.8(2) *Local appeals process.*

a. All contractors shall have a written local procedure to hear appeals. The local procedure shall, at a minimum, include:

(1) The method of notification of the right to appeal;

(2) The procedure for conducting the appeal;

(3) Time limits for each step; and

(4) The method of notification of the outcome of the local appeal and notification of the participant's right to appeal to the state. Notifications of the outcome of the local appeal shall include the facts used to reach the decision and the conclusions drawn from the facts to support the contractor's decision.

b. The written appeals procedure and the record of appeals filed (including the record and disposition of each) shall be available for inspection by authorized representatives of the Iowa department of public health.

87.8(3) *Appeal to department.*

a. *Procedure for appeal.* If a participant is dissatisfied with the decision of the local appeal, the participant may appeal to the state. The appeal shall be made in writing by certified mail, return receipt requested, to the Division Director, Division of Health Promotion and Chronic Disease Prevention, Iowa Department of Public Health, Lucas State Office Building, Des Moines, Iowa 50319-0075, within 15 days of receipt of the local contractor's appeal decision.

b. *Department review.* The department shall evaluate the appeal based upon the merits of the local appeal documentation. A department decision affirming, reserving, or modifying the local appeal decision shall be issued within 30 days of the receipt of all local appeal documentation. The department decision shall be in writing and shall be sent by certified mail, return receipt requested, to the participant and the contractor.

87.8(4) *Further appeal.* The participant may appeal the department's decision by submitting an appeal, within 10 days of receipt of the department's decision, to the Division Director, Division of Health Promotion and Chronic Disease Prevention, Iowa Department of Public Health, Lucas State Office Building, Des Moines, Iowa 50319-0075. Upon receipt of an appeal that meets contested case status, the department shall forward the appeal within 5 working days to the department of inspections and appeals pursuant to the rules adopted by the department of inspections and appeals regarding the

transmission of contested cases. The continued process for appeals shall be governed by 641—Chapter 173, Iowa Administrative Code.

These rules are intended to implement Iowa Code section 135.106.

[Filed emergency 9/14/92—published 9/30/92, effective 9/14/92]
[Filed 11/5/92, Notice 9/30/92—published 11/25/92, effective 12/30/92]
[Filed 7/10/98, Notice 6/3/98—published 7/29/98, effective 9/2/98]
[Filed 1/10/08, Notice 11/21/07—published 1/30/08, effective 7/1/08]

CHAPTER 89
DECISION-MAKING ASSISTANCE PROGRAM AND PARENTAL NOTIFICATION OF INTENT TO TERMINATE A PREGNANCY THROUGH ABORTION

641—89.1(135L) Title. This chapter may be cited as "Decision-Making Assistance Program and Parental Notification of Intent to Terminate a Pregnancy Through Abortion."

641—89.2(135L) Purpose and scope. The rules contained in this chapter govern the procedures and documentation necessary for notification of a parent or grandparent of a pregnant minor prior to the termination of the pregnancy through abortion. These rules also describe the certification procedure for the decision-making assistance program.

641—89.3(135L) Definitions. The following definitions shall apply throughout the chapter.

"Abortion" means an abortion as defined in Iowa Code chapter 146.

"Adult" means a person 18 years of age or older.

"Certification form" means the form included in the written decision-making materials developed by the department.

"Court" means juvenile court.

"Department" means the Iowa department of public health.

"Grandparent" means the parent of an individual who is the parent of the pregnant minor.

"Licensed physician" means a physician as licensed by the Iowa board of medical examiners, Iowa Code chapters 148, 150, and 150A.

"Medical emergency" means a condition which, based upon a physician's judgment, necessitates an abortion to avert the pregnant minor's death, or for which a delay will create a risk of serious impairment of a major bodily function.

"Minor" means a person under 18 years of age who has not been and is not married.

"Parent" means a parent or a legal guardian or custodian of a pregnant minor.

"Video" means the video developed by the Iowa department of public health which provides information regarding the various options available to a pregnant minor with regard to the pregnancy, including a decision to continue the pregnancy to term and retain parental rights following the child's birth, a decision to continue the pregnancy to term and place the child for adoption following the child's birth, and a decision to terminate the pregnancy through abortion.

"Written decision-making materials" means the materials developed by the Iowa department of public health which provide information regarding the various options available to a pregnant minor with regard to the pregnancy as outlined in the definition of video.

641—89.4 to **89.10** Reserved.

DECISION-MAKING ASSISTANCE PROGRAM

641—89.11(135L) Purpose. The program is intended to provide assistance to minors in making informed decisions relating to pregnancy through the use of the video and written decision-making materials developed by the department.

89.11(1) The video and written decision-making materials contain information regarding the following options available to a pregnant minor with regard to the pregnancy:

a. Continue the pregnancy to term and retain parental rights following the child's birth;

b. Continue the pregnancy to term and place the child for adoption following the child's birth; and

c. Terminate the pregnancy through abortion.

89.11(2) Reserved.

641—89.12(135L) Initial appointment of a pregnant minor with a licensed physician from whom an abortion is sought and certification procedure for the decision-making assistance program.

89.12(1) A licensed physician from whom a pregnant minor is seeking the performance of an abortion shall offer the viewing of the video and the written decision-making materials to the pregnant minor during the initial appointment relating to those services.

89.12(2) The pregnant minor shall sign and date the certification form provided in the written decision-making materials or an exact replica certifying that she has been offered a viewing of the video and the written decision-making materials.

a. The minor shall complete a certification form for the licensed physician providing medical services relating to the termination of the minor's pregnancy.

b. The licensed physician from whom an abortion is sought shall keep the original certification form as a part of the minor's medical record relating to the termination of the pregnancy.

c. A copy of the completed certification form shall be provided to the pregnant minor.

89.12(3) A licensed physician shall not knowingly perform an abortion on a pregnant minor prior to obtaining the completed certification form and completing the notification process.

641—89.13 to **89.20** Reserved.

NOTIFICATION PROCESS

641—89.21(135L) Notification of parent prior to the performance of abortion on a pregnant minor.

89.21(1) Notification shall be made to the parent of the pregnant minor at least 48 hours prior to the termination of a pregnancy through abortion unless a judicial waiver is granted as provided in Iowa Code section 135L.3, or unless any of the conditions of rule 89.22(135L) have been met.

a. The licensed physician who will perform the abortion shall provide notification in person or by mailing the notification by restricted certified mail to a parent of the pregnant minor at the usual place of abode of the parent.

b. For the purpose of delivery by restricted certified mail, the time of delivery is deemed to occur at 12 noon on the next day on which regular mail delivery takes place, subsequent to the mailing.

c. The notification form shall be in duplicate in the form that may be provided by the department or shall be in duplicate and include, at a minimum, the following:

(1) The name of the minor.

(2) Notification of the intent to terminate the pregnancy.

(3) The name, address, and relationship of the person to be notified.

d. The licensed physician who will perform the abortion shall keep the original notification form as a part of the minor's medical record relating to the termination of the pregnancy.

e. A copy of the completed notification form shall be provided to the pregnant minor.

89.21(2) If the pregnant minor objects to the notification of a parent prior to the performance of an abortion on the pregnant minor, the pregnant minor may petition the court to authorize waiver of the notification requirement pursuant to Iowa Code section 135L.3.

641—89.22(135L) Exceptions to notification of parent. The requirements of rule 89.21(135L) do not apply if any of the following conditions exist:

89.22(1) The abortion is authorized in writing by a parent entitled to notification.

89.22(2) The pregnant minor declares, in a written statement submitted to the licensed physician who will perform the abortion, a reason for not notifying a parent and a reason for notifying a grandparent of the pregnant minor in lieu of the notification of a parent.

a. The licensed physician who will perform the abortion shall keep all written documentation as a part of the minor's medical record relating to the termination of the pregnancy.

b. Upon receipt of the written statement from the pregnant minor, the licensed physician who will perform the abortion shall provide notification to a grandparent of the pregnant minor, specified by the pregnant minor, in the manner in which the notification of a parent was prescribed in rule 89.21(135L).

c. The notification form shall be in duplicate in the form that may be provided by the department or shall be in duplicate and include, at a minimum, the following:

(1) The name of the minor.

(2) Notification of the intent to terminate the pregnancy.

(3) The name, address, and relationship of the person to be notified.

(4) A declaration which informs the grandparent of the pregnant minor that the grandparent of the pregnant minor may be subject to civil action if the grandparent accepts notification.

(5) A provision that the grandparent of the pregnant minor may refuse acceptance of notification and a provision that the grandparent immediately contact the licensed physician if refusing acceptance of the notification.

d. The licensed physician who will perform the abortion shall keep the original notification form as a part of the minor's medical record relating to the termination of the pregnancy.

e. A copy of the completed notification form shall be provided to the pregnant minor.

89.22(3) The licensed physician who will perform the abortion certifies in writing that a medical emergency exists which necessitates the immediate performance of an abortion in accordance with Iowa Code chapter 135L. The physician shall certify in writing the basis for the medical judgment that a medical emergency exists and place this written certification in the medical file of the pregnant minor.

89.22(4) The pregnant minor declares that the pregnant minor is a victim of child abuse pursuant to Iowa Code section 232.68, the person responsible for the care of the child is a parent of the child, and either the abuse has been reported pursuant to the procedures prescribed in Iowa Code chapter 232, division III, part 2, or a parent of the child is named in a report of founded child abuse.

89.22(5) The pregnant minor declares that the pregnant minor is a victim of sexual abuse as defined in Iowa Code chapter 709 and has reported the sexual abuse to law enforcement.

89.22(6) The pregnant minor elects not to allow notification of the pregnant minor's parent and a court authorizes waiver of the notification requirement following completion of the proceedings prescribed under Iowa Code chapter 135L.

641—89.23(135L) Physician compliance. A licensed physician shall not perform an abortion on a pregnant minor prior to compliance with the requirements outlined in rule 89.21(135L) or 89.22(135L).

641—89.24 and **89.25** Reserved.

641—89.26(135L) Fraudulent practice. A person who does any of the following is guilty of a fraudulent practice in the fourth degree pursuant to Iowa Code section 714.12:

89.26(1) Knowingly tenders a false original or copy of the signed and dated certification form described in rule 89.12(135L) or Iowa Code section 135L.2, to be retained by the licensed physician.

89.26(2) Knowingly tenders a false original or copy of the notification document mailed to a parent or grandparent of the pregnant minor under this chapter, a false original or copy of the written certification to be provided to a parent of a pregnant minor pursuant to rule 89.22(135L) or Iowa Code section 135L.6, or a false original or copy of the order waiving notification relative to the performance of an abortion on a pregnant minor.

These rules are intended to implement Iowa Code chapter 135L as amended by 1997 Iowa Acts, House File 121.

[Filed emergency 11/14/96 after Notice 10/9/96—published 12/4/96, effective 1/1/97]

[Filed emergency 7/11/97 after Notice 6/4/97—published 7/30/97, effective 7/11/97]

CHAPTER 90
IOWA CHILD DEATH REVIEW TEAM

641—90.1(135) Purpose. The purpose of the Iowa child death review team is to aid in the reduction of preventable deaths of children under the age of 18 years through the identification of unsafe consumer products; identification of unsafe environments; identification of factors that play a role in accidents, homicides and suicides which may be eliminated or counteracted; and promotion of communication, discussion, cooperation, and exchange of ideas and information among agencies investigating child deaths.
[**ARC 9248B**, IAB 12/1/10, effective 1/5/11]

641—90.2(135) Definitions.

"Team" means the Iowa child death review team.

"Unexcused absence" means failure by a team member to notify the chairperson of an anticipated absence from a team meeting.

641—90.3(135) Agency. The Iowa child death review team is established as part of the office of the state medical examiner. The office of the state medical examiner shall provide staffing and administrative support to the team as needed to collect data, organize meetings, and issue an annual report.
[**ARC 9248B**, IAB 12/1/10, effective 1/5/11]

641—90.4(135) Membership. The membership of the review team is subject to the provisions of Iowa Code sections 69.16 and 69.16A, relating to political affiliation and gender balance. Review team members who are not designated by another appointing authority shall be appointed by the state medical examiner. Membership terms shall be for three years. Members may not serve more than two consecutive terms.

90.4(1) The review team shall include the following:

a. The state medical examiner's designee.

b. A certified or licensed professional who is knowledgeable concerning sudden infant death syndrome.

c. A pediatrician who is knowledgeable concerning deaths of children.

d. A family practice physician who is knowledgeable concerning deaths of children.

e. One mental health professional who is knowledgeable concerning deaths of children.

f. One social worker who is knowledgeable concerning deaths of children.

g. A certified or licensed professional who is knowledgeable concerning domestic violence.

h. A professional who is knowledgeable concerning substance abuse.

i. A local law enforcement official.

j. A county attorney.

k. An emergency room nurse who is knowledgeable concerning the deaths of children.

l. A perinatal expert.

m. A representative of the health insurance industry.

n. One other appointed at large.

The state medical examiner's office may temporarily appoint other members to serve as experts, as needed, on a case-by-case basis.

90.4(2) Vacancies shall be filled in the same manner in which the original appointments were made. An appointment shall complete the original member's term.

90.4(3) Three consecutive unexcused absences shall be grounds for the state medical examiner to consider dismissal of the team member and to appoint another. The chairperson of the team is charged with providing notification of absences.
[**ARC 9248B**, IAB 12/1/10, effective 1/5/11]

641—90.5(135) Officers. The review team shall elect a chairperson, a vice chairperson, and other officers as deemed necessary by the review team. Officers shall be elected at the first meeting of each

fiscal year. Vacancy in the office of the chairperson shall be filled by elevation of the vice chairperson. Vacancy in the office of the vice chairperson shall be filled by election at the next meeting after the vacancy occurs. The chairperson shall preside at all meetings of the team, appoint such subcommittees as deemed necessary, and designate the chairperson of each subcommittee. If the chairperson is absent or unable to act, the vice chairperson shall perform the duties of the chairperson. When so acting, the vice chairperson shall have all the powers of and be subject to all restrictions upon the chairperson. The vice chairperson shall also perform such other duties as may be assigned by the chairperson.
[**ARC 9248B**, IAB 12/1/10, effective 1/5/11]

641—90.6(135) Meetings. The team shall meet as determined by the state medical examiner or as determined by the review team.
[**ARC 9248B**, IAB 12/1/10, effective 1/5/11]

641—90.7(135) Expenses of team members. The state medical examiner's office shall reimburse members of the team for travel expenses according to state guidelines.
[**ARC 9248B**, IAB 12/1/10, effective 1/5/11]

641—90.8(135) Team responsibilities. The state medical examiner's office will be responsible for the collection of data for sudden unexpected or nonnatural deaths for all children under the age of 18 years that occur in the state of Iowa. The state medical examiner's office will review all child deaths in Iowa and will refer those deemed preventable for additional review by the child death review team. The state medical examiner's office will be responsible for data entry. The team shall perform the following responsibilities:

90.8(1) Collect, review, and analyze child death certificates and child death data, including patient records, other pertinent confidential information, and other information the review team deems appropriate concerning deaths of children under 18 years of age which have been deemed preventable by the state medical examiner's office. An annual report will be prepared for the governor and the general assembly concerning the cause and manner of child deaths. The report shall include factual information obtained through review and recommendations regarding prevention of child deaths.

90.8(2) Recommend to the governor and the general assembly interventions to prevent deaths of children based on an analysis of the cause and manner of such deaths.

90.8(3) Recommend to the agencies represented on the review team and to other agencies changes which may prevent child deaths.

90.8(4) Maintain the confidentiality of any patient records or other confidential information reviewed.

90.8(5) If deemed appropriate by the team at any point in the review, the team may recommend to the department of human services, appropriate law enforcement agencies, and any person involved with child protection interventions that may prevent harm to a child who is related to or is living in the same home as a child whose case is reviewed by the team.

90.8(6) Develop protocols for a child fatality review committee (see 641—Chapter 92) to be appointed by the state medical examiner on an ad hoc basis to immediately review the child abuse assessments which involve the fatality of a child under the age of 18 years. The state medical examiner shall appoint a medical examiner, a pediatrician, and a person involved with law enforcement to the committee.

90.8(7) The team may establish subcommittees to which the team may delegate some or all of the team's responsibilities set out in this rule.
[**ARC 9248B**, IAB 12/1/10, effective 1/5/11]

641—90.9(135) Liaisons.

90.9(1) The following individuals shall each designate a liaison to assist the team in fulfilling its responsibilities.

a. Director of public health.

b. Director of human services.

c. Commissioner of public safety.
d. Administrator of the bureau of vital records of the Iowa department of public health.
e. Attorney general.
f. Director of transportation.
g. Director of the department of education.

90.9(2) The chairperson shall designate a liaison from the public at large.

90.9(3) The membership terms of the liaisons shall be for three years. The liaisons may not serve more than two consecutive terms.

[**ARC 9248B**, IAB 12/1/10, effective 1/5/11]

641—90.10(135) Confidentiality and disclosure of information. The team and liaisons shall maintain the confidentiality of all information and records used in the review and analysis of child deaths, including disclosure of information which is confidential under Iowa Code chapter 22 or any other provisions of state law. No information on individual deaths contained in the records described in this rule shall be disclosed except for the purposes of the team, committee or subcommittee meeting, and no confidential information received in preparation for or during the course of such meeting shall be removed from the meeting room except for further review as authorized by the team chairperson.

In preparation for review of an individual death by the team or its authorized committee or subcommittee, the chairperson of the team or the chairperson's designee is authorized to gather all information pertinent to the review. This information may include, but is not limited to, hospital records, physician's records, school records, day-care records, autopsy records, child abuse registry, investigation or assessment records, state public assistance records, traffic records, public safety records, law enforcement records, fire marshal's records, birth records, death records, and other relevant records necessary to conduct a complete review.

A person in possession or control of medical, investigative or other information pertaining to a child death and child abuse review shall allow the inspection and reproduction of the information by the department upon the request of the department, to be used only in the administration and for the duties of the Iowa child death review team. Information and records which are confidential under Iowa Code section 22.7and chapter 235A, and information or records received from the confidential records, remain confidential under this rule. A person does not incur legal liability by reason of releasing information to the department as required under and in compliance with this rule.

641—90.11(135) Immunity and liability. Review team members and their agents are immune from any liability, civil or criminal, which might otherwise be incurred or imposed as a result of any act, omission, proceeding, decision, or determination undertaken or performed, or recommendation made as a review team member or agent provided that the review team members or agents acted in good faith and without malice in carrying out their official duties in their official capacity. A complainant bears the burden of proof in establishing malice or lack of good faith in an action brought against review team members involving the performance of their duties and powers.

A person who releases or discloses confidential data, records, or any other type of information in violation of this chapter is guilty of a serious misdemeanor.

These rules are intended to implement Iowa Code Supplement section 135.43.

[Filed 3/15/96, Notice 1/31/96—published 4/10/96, effective 5/15/96]
[Filed 7/10/98, Notice 4/22/98—published 7/29/98, effective 9/2/98]
[Filed 11/30/00, Notice 10/4/00—published 12/27/00, effective 1/31/01]
[Filed ARC 9248B (Notice ARC 8973B, IAB 7/28/10), IAB 12/1/10, effective 1/5/11]

CHAPTER 91
IOWA DOMESTIC ABUSE DEATH REVIEW TEAM

641—91.1(135) Purpose. The purpose of the domestic abuse death review team is to aid in the reduction of the incidence of domestic abuse deaths by accurately identifying the cause and manner of deaths occurring from domestic violence and by making recommendations for changes in policy and practice to improve community interventions for preventing domestic abuse deaths.
[**ARC 9110B**, IAB 10/6/10, effective 11/10/10]

641—91.2(135) Definitions.

"Team" means the Iowa domestic abuse death review team.

"Unexcused absence" means failure by a team member to notify the chairperson of an anticipated absence from a team meeting.
[**ARC 9110B**, IAB 10/6/10, effective 11/10/10]

641—91.3(135) Agency. The Iowa domestic abuse death review team is established as an independent agency of state government. The Iowa department of public health shall provide staffing and administrative support to the team.
[**ARC 9110B**, IAB 10/6/10, effective 11/10/10]

641—91.4(135) Membership. The membership of the team is subject to the provisions of Iowa Code sections 69.16 and 69.16A, relating to political affiliation and gender balance. Team members who are not designated by another appointing authority shall be appointed by the director of public health, in consultation with the attorney general. At least one member shall also be a member of the Iowa child death review team. Membership terms shall be for three years. One-third of the initial members shall serve for three years, one-third of the initial members shall serve for two years, and one-third of the initial members shall serve for one year, as designated by the appointing authority.

91.4(1) The team shall include the following:

a. The state medical examiner or the state medical examiner's designee.

b. A licensed physician or nurse who is knowledgeable concerning domestic abuse injuries and deaths, including suicides.

c. A licensed mental health professional who is knowledgeable concerning domestic abuse.

d. A representative or designee of the Iowa coalition against domestic violence.

e. A certified or licensed professional who is knowledgeable concerning substance abuse.

f. A law enforcement official who is knowledgeable about domestic abuse and is a member of a state law enforcement association.

g. A law enforcement investigator experienced in domestic abuse investigation.

h. A prosecuting attorney experienced in prosecuting domestic abuse cases.

i. A member of the judiciary appointed by the chief justice of the supreme court.

j. A clerk of the district court appointed by the chief justice of the supreme court.

k. A department of correctional services' employee or subcontractor who is assigned batterers' treatment program responsibilities and is knowledgeable about risk level assessment.

l. An attorney licensed in this state who provides criminal defense assistance or child custody representation and who is experienced in dissolution of marriage proceedings.

m. Both a female and a male victim of domestic abuse.

n. A family member of a decedent whose death resulted from domestic abuse.

91.4(2) Vacancies shall be filled in the same manner in which the original appointments were made. An appointee shall complete the original member's term.

91.4(3) Three consecutive unexcused absences shall be grounds for the director to consider dismissal of the team member and the appointment of another. The chairperson of the team is charged with providing notification of absences.

91.4(4) The department may temporarily appoint other members to serve as experts, as needed, on a case-by-case basis.

91.4(5) Members of the team who are currently practicing attorneys or current employees of the judicial branch shall not participate in the following:

a. A case review involving a case in which the team member is presently involved by professional capacity.

b. Development of protocols for domestic abuse death investigations and team review.

c. Development of regulatory changes related to domestic abuse deaths.

[**ARC 9110B**, IAB 10/6/10, effective 11/10/10]

641—91.5(135) Officers. Officers of the team shall be a chairperson and a vice chairperson and shall be elected at the first meeting of each fiscal year unless designated at the time of appointment. Vacancy in the office of chairperson shall be filled by elevation of the vice chairperson. Vacancy in the office of vice chairperson shall be filled by election at the next meeting after the vacancy occurs. The chairperson shall preside at all meetings of the team, appoint such subcommittees as deemed necessary, and designate the chairperson of each subcommittee. If the chairperson is absent or unable to act, the vice chairperson shall perform the duties of the chairperson. When so acting, the vice chairperson shall have all the powers of and be subject to all restrictions upon the chairperson. The vice chairperson shall also perform such other duties as may be assigned by the chairperson.

[**ARC 9110B**, IAB 10/6/10, effective 11/10/10]

641—91.6(135) Meetings. The team shall meet upon the call of the chairperson, upon the request of a state agency, or as determined by the team. Robert's Rules of Order shall govern all meetings.

[**ARC 9110B**, IAB 10/6/10, effective 11/10/10]

641—91.7(135) Expenses of team members. The members of the team are eligible for reimbursement of actual and necessary expenses incurred in the performance of their official duties.

[**ARC 9110B**, IAB 10/6/10, effective 11/10/10]

641—91.8(135) Team duties and responsibilities.

91.8(1) The team shall perform the following duties:

a. Prepare a biennial report to the governor, supreme court, attorney general, and the general assembly concerning the following subjects:

(1) The causes and manner of domestic abuse deaths, including an analysis of factual information obtained through review of domestic abuse death certificates and domestic abuse death data, including patient records and other pertinent confidential and public information concerning domestic abuse deaths.

(2) The contributing factors of domestic abuse deaths.

(3) Recommendations regarding the prevention of future domestic abuse deaths, including actions to be taken by communities, based on an analysis of the contributing factors.

b. Advise and consult the agencies represented on the team and other state agencies regarding program and regulatory changes that may prevent domestic abuse deaths.

c. Develop protocols for domestic abuse death investigations and team review.

91.8(2) In performing duties pursuant to subrule 91.8(1), the review team shall:

a. Review information concerning the relationship between the decedent victim and the alleged or convicted perpetrator from the point when the abuse began until the death occurred in order to identify any correlation between events in the relationship and the escalation of the abuse.

b. Review documents such as orders of protection, dissolution, custody, and support or related court records.

c. Determine whether patterns regarding these events can be established in relation to domestic abuse deaths in general, and consider such conclusions in making recommendations for the biennial report.

91.8(3) The team may establish committees or panels to which the team may assign some or all of the team's responsibilities set out in this rule.

[**ARC 9110B**, IAB 10/6/10, effective 11/10/10]

641—91.9(135) Liaisons. The following individuals shall each designate a liaison to assist the team in fulfilling its responsibilities:

1. Director of public health.
2. Director of human services.
3. Commissioner of public safety.
4. Director of corrections.
5. Attorney general.
6. Director of education.
7. State court administrator.
8. Director of the law enforcement academy.
9. Director of human rights.
10. Administrator of the bureau of vital records of the department of public health.

[**ARC 9110B**, IAB 10/6/10, effective 11/10/10]

641—91.10(135) Confidentiality and disclosure of information. The team and liaisons shall maintain the confidentiality of all information and records used in the review and analysis of domestic abuse deaths, including disclosure of information which is confidential under Iowa Code chapter 22 or any other provisions of state law.

91.10(1) No information on individual deaths contained in the records described in this rule shall be disclosed except for the purposes of the team, committee or subcommittee meeting, and no confidential information received in preparation for or during the course of such meeting shall be removed from the meeting room except for further review as authorized by the team chairperson.

91.10(2) In preparation for review of an individual death by the team or its authorized committee or subcommittee, the chairperson of the team or the chairperson's designee is authorized to gather all information pertinent to the review. This information may include, but is not limited to:

a. Hospital records;
b. Physician's records;
c. School and child care records;
d. Autopsy records;
e. Child abuse registry, investigation or assessment records;
f. State public assistance records;
g. Traffic and public safety records;
h. Law enforcement records;
i. Fire marshal's records;
j. Birth and death records; and
k. Other relevant records necessary to conduct a complete review.

91.10(3) A person in possession or control of medical, investigative or other information pertaining to a domestic abuse death and related incidents and events preceding the domestic abuse death shall allow the inspection and reproduction of the information by the department upon the request of the department to be used only in the administration and for the duties of the Iowa domestic abuse death review team.

91.10(4) Information and records which are confidential under Iowa Code section 22.7 and Iowa Code chapter 235A, and information or records received from the confidential records, remain confidential under this rule.

91.10(5) A person does not incur legal liability by reason of releasing information to the department as required under and in compliance with this rule.

91.10(6) A person who releases or discloses confidential data, records, or any other type of information in violation of this rule is guilty of a serious misdemeanor.

[**ARC 9110B**, IAB 10/6/10, effective 11/10/10]

641—91.11(135) Immunity and liability.

91.11(1) Review team members and their agents are immune from any liability, civil or criminal, which might otherwise be incurred or imposed as a result of any act, omission, proceeding, decision, or determination undertaken or performed, or recommendation made as a review team member or agent

provided that the review team members or agents acted in good faith and without malice in carrying out their official duties in their official capacity.

91.11(2) A complainant bears the burden of proof in establishing malice or lack of good faith in an action brought against review team members involving the performance of their duties and powers.
[**ARC 9110B**, IAB 10/6/10, effective 11/10/10]

These rules are intended to implement Iowa Code sections 135.108 to 135.112.

[Filed 11/10/98, Notice 9/9/98—published 12/2/98, effective 1/6/99]
[Filed ARC 9110B (Notice ARC 8974B, IAB 7/28/10), IAB 10/6/10, effective 11/10/10]

CHAPTER 92
IOWA FATALITY REVIEW COMMITTEE

641—92.1(135) Purpose. The purpose of the child fatality review committee is to determine whether the department of human services and others involved with the case of child abuse responded appropriately.

641—92.2(135) Definitions.

"Child abuse assessment" means an assessment performed in accordance with Iowa Code section 232.71B.

"Child fatality" means the death of a child under the age of 18.

"Committee" means the Iowa child fatality review committee.

"Department" means the department of public health.

"Multidisciplinary team" means the group of individuals as defined in Iowa Code section 235A.13.

[**ARC 9355B**, IAB 2/9/11, effective 3/16/11]

641—92.3(135) Committee. The committee is an ad hoc committee appointed by the state medical examiner on a case-by-case basis. The committee shall include a medical examiner, a pediatrician who is knowledgeable concerning deaths of children, and a person involved in law enforcement. The committee may also consult with individuals with specific child death expertise as necessary to perform the duties and responsibilities of the committee. The office of the state medical examiner shall provide staffing and administrative support to the committee.

[**ARC 9355B**, IAB 2/9/11, effective 3/16/11]

641—92.4(135) Formation of the committee. The state medical examiner may appoint a committee to review the death of a child under the age of 18 upon the request from a member of the legislature or the governor in cases in which a report of suspected child abuse had been filed with the department of human services pursuant to Iowa Code section 232.70 within two years preceding the child's death.

[**ARC 9355B**, IAB 2/9/11, effective 3/16/11]

641—92.5(135) Committee protocol for review. In determining whether the department of human services and others involved with the case of child abuse responded appropriately, the committee shall review records relevant to the child's death, which may include but are not limited to the following:

1. All reports of suspected child abuse on the identified child made to the department of human services pursuant to Iowa Code section 232.70;
2. All child abuse assessments performed on the identified child in accordance with Iowa Code section 232.71B;
3. All other department of human services records maintained on the identified child;
4. All relevant law enforcement records which refer to the identified child;
5. All relevant medical and hospital records of the identified child;
6. All relevant court records which refer to the identified child;
7. Records of any multidisciplinary team which reviewed the case of the identified child;
8. Records of any public entity which reviewed the case of the identified child; and
9. All relevant records maintained by a day care provider, other child care provider, preschool, elementary school, middle school, or high school which refer to the identified child.

The committee shall also consult with any multidisciplinary team that is operating in the area where the fatality occurred.

641—92.6(135) Content of report.

92.6(1) Upon completion of the review, the state medical examiner shall submit the committee's report to:

a. The governor or the governor's designee;

b. The member of the senate or employee of the general assembly designated by the majority leader or minority leader of the senate;

c. The member of the house of representatives or employee of the general assembly designated by the speaker or minority leader of the house of representatives.

92.6(2) The committee report shall include findings concerning the case and recommendations for changes to prevent child fatalities when similar circumstances exist. The report shall include but is not limited to the following information:

a. The dates, outcomes, and results of any actions taken by the department of human services and others in regard to each report and allegation of child abuse involving the child who died.

b. The results of any review of the case performed by a multidisciplinary team, or by any other public entity that reviewed the case.

c. Confirmation of the department of human services' receipt of any report of child abuse involving the child, including confirmation as to whether or not any assessment involving the child was performed in accordance with Iowa Code section 232.71B, the results of any assessment, a description of the most recent assessment and the services offered to the family, the services rendered to the family, and the basis for the department's decisions concerning the case.

92.6(3) If deemed appropriate by the committee, the committee may, at any point in the review, recommend to the department of human services, appropriate law enforcement agencies, and any other person involved with child protection, interventions intended to prevent harm to a child who is related to or is living in the same home as a child whose case is reviewed by the committee.

[**ARC 9355B**, IAB 2/9/11, effective 3/16/11]

641—92.7(135) Consultation with county attorney. Prior to issuing the report, the committee shall consult with the county attorney responsible for prosecution of the alleged perpetrator of the child fatality. The committee's report shall include child abuse information associated with the case and the child but is subject to the restrictions applicable to the department of human services for release of information concerning a child fatality or near fatality in accordance with Iowa Code section 235A.15(9).

641—92.8(135) Supplemental report. Following the completion of the trial of any alleged perpetrator of the child fatality and the appeal period for the granting of a new trial, the committee shall issue a supplemental report containing the information that was withheld, in accordance with rule 92.7(135), so as not to jeopardize the prosecution or the rights of the alleged perpetrator to a fair trial as described in Iowa Code section 235A.15(9)*"f"* and *"g."*

641—92.9(135) Confidentiality and disclosure of information. The committee shall have access to patient records and other confidential information. The committee may redisseminate confidential information in the committee's report which shall be submitted to the governor and the general assembly. For all other purposes, the committee shall maintain the confidentiality of all records which are confidential under Iowa Code section 22.7, Iowa Code chapter 235, or other provision of law. A person in possession or control of medical, investigative, or assessment information or other information pertaining to a child death and child abuse review shall allow the inspection and reproduction of the information by the department, upon the request of the department, to be used only in the administration and for the duties of the Iowa child fatality review committee. A person does not incur legal liability by reason of releasing information to the department as required under and in compliance with this rule.

641—92.10(135) Immunity and liability. Review committee members are immune from any liability, civil or criminal, which might otherwise be incurred or imposed as a result of any act, omission, proceeding, decision, or determination undertaken or performed, or recommendation made as a review committee member provided that the review committee members acted in good faith and without malice in carrying out their official duties in their official capacity. A complainant bears the burden of proof in establishing malice or lack of good faith in an action brought against review committee members involving the performance of their duties and powers.

A person who releases or discloses confidential data, records, or any other type of information in violation of this chapter is guilty of a serious misdemeanor.

These rules are intended to implement Iowa Code section 135.43(4).

[Filed emergency 11/9/00—published 11/29/00, effective 11/9/00]
[Filed 5/25/01, Notice 1/10/01—published 6/13/01, effective 7/18/01]
[Filed ARC 9355B (Notice ARC 9236B, IAB 11/17/10), IAB 2/9/11, effective 3/16/11]

CHAPTER 93
MANDATORY REPORTER TRAINING CURRICULA

641—93.1(135) Purpose. The purpose of the mandatory reporter training curricula process is to provide an objective method by which curricula for child and dependent adult abuse mandatory reporter training are reviewed and approved. Approved curricula are to be taught to persons who work in a position classification that under law makes the persons mandatory reporters of child or dependent adult abuse and the position classification does not have a mandatory reporter training curriculum approved by a licensing or examining board.
[**ARC 1300C**, IAB 2/5/14, effective 3/12/14]

641—93.2(135) Panel. Rescinded **ARC 1300C**, IAB 2/5/14, effective 3/12/14.

641—93.3(135) Meetings. Rescinded **ARC 1300C**, IAB 2/5/14, effective 3/12/14.

641—93.4(135) Duties. The department shall perform the following duties:

1. Review and approve criteria for child and dependent adult abuse curricula for persons who work in a position classification that under law makes the persons mandatory reporters of child or dependent adult abuse and the position classification does not have a mandatory reporter training curriculum approved by a licensing or examining board.
2. Conduct literature reviews and scrutinize existing research pertinent to its purpose.
3. Review curricula based on the criteria established in rule 93.5(135).
4. Report decisions regarding approvals or denials to applicants.
5. Review appeals as provided in rule 93.7(135).
6. Maintain a list of all approved curricula and distribute the list upon request.

[**ARC 1300C**, IAB 2/5/14, effective 3/12/14]

641—93.5(135) Standards for approval of curricula. The following criteria are established to assist in evaluation of curricula. Nothing in this rule shall preclude providers from offering additional coursework, training, or information that exceeds or expands upon the curriculum prescribed by the department. At a minimum, approved curricula shall contain each of the following:

93.5(1) Content that necessitates at least two hours of training.

93.5(2) The definition of child abuse as defined in Iowa Code section 232.68(2) or the definition of dependent adult abuse as defined in Iowa Code section 235B.2(5) or both.

93.5(3) Training in the physical, psychological, behavioral, environmental, and other relevant indicators of child abuse as defined in Iowa Code section 232.68(2) or dependent adult abuse as defined in Iowa Code section 235B.2(5) or both.

93.5(4) Requirements and procedures for reporting suspected cases of abuse, including when to report, how to report, and to whom to report.

93.5(5) Review of the Code of Iowa and the Iowa Administrative Code pertaining to child or dependent adult abuse, including review of the classifications of mandatory reporters, confidentiality provisions, immunity provisions, and penalties for failure to report.

93.5(6) A description of the assessment protocol utilized by the department of human services and other investigating agencies following receipt of a report and the manner in which information is shared between the department of human services and the reporter, other relevant individuals, agencies, and entities.

93.5(7) An evaluation component to assess the understanding, knowledge, and skills acquired.

93.5(8) Resource materials or information in the following areas:

a. The causes and risk factors of child or dependent adult abuse;

b. Assisting individuals and families who have experienced child or dependent adult abuse, including information on local resources and available referral services;

c. Prevention of child or dependent adult abuse.

[**ARC 1300C**, IAB 2/5/14, effective 3/12/14]

641—93.6(135) Process for application review and approval.

93.6(1) *Submission and decision.* An organization, institution, agency, or individual may submit an application for approval of curriculum on a form prescribed by the department. The application shall at a minimum demonstrate the manner in which the proposed curriculum meets the criteria in rule 93.5(135). Within three months of submission of an application, the department shall review the application and issue a written decision regarding the application. If each of the standards for approval has been satisfied, the department shall approve the curriculum for a period of three years and shall notify the applicant of the department's decision in writing. If the standards for approval have not been met, the department shall deny the curriculum and shall provide to the applicant a written explanation of the reason for denial.

93.6(2) *Renewal.* Within 90 days of expiration of the three-year approval period, an applicant may apply for approval renewal by completing a renewal of application form provided by the department.

93.6(3) *Additional information.* The department may request additional information from the applicant or other individuals at any phase in the review process.

93.6(4) *Evaluation of approved curriculum.* The department may at any time reevaluate an approved curriculum. Upon evidence of a significant variation in the curriculum presented from the curriculum approved, the department may disapprove all or any part of the previously approved curriculum.

93.6(5) *Amendment to approved curriculum.* The department may require amendments to an approved curriculum based on legislative or administrative rule changes.

[**ARC 1300C**, IAB 2/5/14, effective 3/12/14]

641—93.7(135) Process for appeal. A person aggrieved by a department decision may, within 30 days of receipt of the decision, appeal the decision by submitting a written appeal to the department which states the reason for the appeal. Within 60 days of receipt of the appeal, the department shall review the application and any additional information submitted. If the department finds that each of the standards for approval has been satisfied, the department shall approve the curriculum. If the standards for approval have not been met, the department shall deny the curriculum. The department shall provide a written explanation of the reasons for the approval or denial of approval. This decision is the final action of the department and shall be considered final agency action for purposes of judicial review. The appeal review process is not a contested case proceeding as that term is defined in Iowa Code chapter 17A.

[**ARC 1300C**, IAB 2/5/14, effective 3/12/14]

These rules are intended to implement Iowa Code section 135.11(24) as amended by 2013 Iowa Acts, Senate File 396, section 49.

[Filed 1/10/02, Notice 11/28/01—published 2/6/02, effective 3/13/02]

[Filed 7/13/07, Notice 6/6/07—published 8/1/07, effective 9/5/07]

[Filed ARC 1300C (Notice ARC 1036C, IAB 10/2/13), IAB 2/5/14, effective 3/12/14]

CHAPTER 94
CHILD PROTECTION CENTER GRANT PROGRAM

641—94.1(135) Scope and purpose. A child protection center grant program is established to provide grants to eligible applicants for the purpose of establishing new child protection centers and to support existing child protection centers. Grants may be available to eligible organizations that meet, or that are in the process of implementing, child protection center standards established by the National Children's Alliance. If sufficient funding is available, the program shall, at a minimum, award a grant to a child protection center in or available to each department of human services region in Iowa. Implementation of the grant program is subject to the availability of funding.

641—94.2(135) Definitions. For the purposes of these rules, the following definitions shall apply:

"Child abuse" means abuse as defined by Iowa Code section 232.68(2).

"Child protection center" or *"child advocacy center"* means a comprehensive, child-focused program, designed by communities to meet their needs, based in a facility that allows law enforcement, child protection professionals, prosecutors, and the mental health and medical communities to work together to handle child abuse cases. Child advocacy center is synonymous with child protection center.

"Child protection worker" means a worker as defined by Iowa Code section 232.68(2A).

"Culturally competent" means the capacity to function in more than one culture, requiring the ability to appreciate, understand and interact with members of diverse populations within the community.

"Department" means the Iowa department of public health.

"Developmentally appropriate" means that services are based on human development and learning, individual characteristics and experiences, social and cultural contexts.

"Director" means the director of the Iowa department of public health.

"Family advocate" means an individual who supports a child provided service through a child protection center and ensures access to formal or informal community services as needed by the child or the child's family.

"Forensic interview" means a face-to-face meeting between individuals to elicit information and that follows a process suitable for a law court or public debate.

"Multidisciplinary team" means individuals with many education levels that encompass the individuals' beliefs and training in fields of health, education, human service, justice, faith, and others.

641—94.3(135) Goals. A child protection center's goals for victims of child abuse allegations shall be:

1. To provide consistent and expedient response and follow-up to abuse reports.
2. Coordination of activities to investigate, prosecute, and treat child abuse.
3. To advocate for medical and mental health resources to effectively help the child and the child's family.
4. To reduce the number of interviews and interactions with a victim.
5. To provide consistent and compassionate support for the child and the child's family.
6. To ensure that the child is not further victimized by the system designed to protect the child.
7. To increase successful prosecutions.

641—94.4(135) Review process.

94.4(1) The department shall establish a request for proposal and application process for organizations eligible to receive funding. The department shall establish a process to review applications, which includes receiving input from a review committee. The review process and review criteria shall be described in the request for proposals.

94.4(2) The director shall create a committee to review proposals and make recommendations to the director. At a minimum, committee membership shall include representation from:

a. State departments of human services, justice and public health;

b. Iowa Medical Society;

c. Iowa Hospital Association;

d. Iowa Nurses Association; and

e. Iowa chapter of the National Association of Social Workers.

641—94.5(135) Eligibility and criteria. To be eligible for a child protection center grant, an organization shall:

94.5(1) Have acquired partial membership rank as a child advocacy center from the National Children's Alliance and shall identify a plan to acquire full membership rank within one year of receiving a state grant.

94.5(2) Have in place an interagency memorandum of understanding which meets the requirements of Iowa Code section 135.118. The applicant shall provide in the application written information in the following areas:

a. Data, statistics and facts from an assessment of need and assets in the community to support a child protection center for children.

b. Identification of barriers to the child protection center to reach the purpose and goals for children as may exist in federal, state or local rules, regulations, codes, policies or procedures.

c. A plan to request and advocate waivers of federal, state, or local rules, regulations, codes, policies, or procedures to remove or reduce barriers.

d. The child protection center's access to information regarding all suspected or confirmed child abuse/neglect victims in the identified service area.

e. The child protection center's provision of 24-hour access to center staff for support, questions and referrals regarding child abuse.

f. Identification of matching local funds to support and sustain the child protection center in the community.

g. A plan for community education on prevention of child abuse and neglect.

h. Collaboration agreements with providers of human services, child health services, early education services, and all other potential community partners to support the purpose and goals of the child protection center.

i. The child protection center's ability to access and utilize alternate funds for activities provided.

641—94.6(135) Appeals. An applicant may appeal the denial of a properly submitted grant application. Appeals shall be governed by rule 641—176.8(135,17A).

These rules are intended to implement Iowa Code section 135.118.

[Filed 3/14/03, Notice 2/5/03—published 4/2/03, effective 5/7/03]

CHAPTER 95
VITAL RECORDS: GENERAL ADMINISTRATION

[Prior to 12/12/12, see [641] Ch 96, 98.1, Chs 103, 104]

641—95.1(144) Definitions. For the purpose of 641—Chapters 95 to 100, the following definitions shall apply:

"Administrative costs" means costs for the registration, collection, preservation, modification and certification of records, including but not limited to costs related to copying, regular mailing, searching, staffing, and maintenance of systems.

"Advanced registered nurse practitioner" or *"ARNP"* means an individual licensed pursuant to Iowa Code chapter 152.

"Age of majority" means the chronological moment when a child legally assumes majority control over the child's own person and actions and decisions, thereby terminating the legal control and legal responsibilities of the child's parents over and for the child. The period of minority extends to the age of 18 years, but every minor attains majority by marriage.

"Amendment" means a change made by the state registrar upon request from an entitled person as described in 641—95.8(144) to an obvious error, omission, or transposition of letters in a word of common knowledge one year or more after the event.

"Birth center" means a facility or institution, which is not an ambulatory surgical center or a hospital or in a hospital, in which births are planned to occur following a normal, uncomplicated, low-risk pregnancy.

"Birthing institution" means a private or public hospital licensed pursuant to Iowa Code chapter 135B that has a licensed obstetric unit or is licensed to provide obstetric services.

"Burial-transit permit" means a permit which is required to assume custody of a dead body or fetus pursuant to Iowa Code section 144.32.

"Certificate" means the written or electronic legal document containing the facts of an event; also used interchangeably with the term "record."

"Certificate of birth resulting in stillbirth," pursuant to Iowa Code section 144.31A, means a noncertified copy issued based upon a properly filed fetal death certificate to record the birth of a stillborn fetus.

"Certified copy" means an official copy of a registered vital record that is authenticated by the registrar in whose jurisdiction the record is registered. A certified copy contains a statement certifying the facts are true and accurate as recorded, is printed on security paper, and has authentication seals and signatures. A certified copy excludes all entries indicated as confidential or for statistical information.

"Commemorative certificate," pursuant to Iowa Code section 144.45A, means a commemorative abstract of an Iowa birth or marriage record that has been properly filed.

"Confidential information" means data or information that is on a vital record, is not considered public information, and is restricted as to its release pursuant to Iowa Code chapter 144 or other provision of federal or state law.

"Correction" means a change made by the state registrar upon observation, upon query, or upon request from an entitled person as described in 641—95.8(144) to an obvious error, omission, or transposition of letters in a word of common knowledge within one year and prior to the first anniversary of the event.

"County registrar" means the county recorder with the authority to record vital records and issue certified copies. The county registrar operates under the state vital records laws and rules and the guidance of the state registrar pursuant to Iowa Code sections 144.5 and 144.9. Pursuant to Iowa Code section 331.601(4), if the office of the county recorder has been abolished, "county registrar" means the office to which the duties are assigned by the county board of supervisors.

"County resident copy" means a properly filed, clearly marked working copy of a decedent's death certificate which is sent to and recorded by the county registrar of the county of the decedent's residence in the event the death occurred outside the county of the decedent's residence.

"Court of competent jurisdiction" means the appropriate court for the type of action. When used to refer to inspection of an original certificate of birth based upon an adoption, "court of competent jurisdiction" means the court in which the adoption was ordered.

"Custody" means guardianship or control of vital records, including both physical possession, referred to as physical custody, and legal responsibility, referred to as legal custody, unless one or the other is specified. The state registrar shall not transfer legal custody of vital records to another agency for purposes of granting public access until all the records have been purged of all confidential information.

"Day" means calendar day.

"Dead human body" means a lifeless human body or parts or bones of a body, if, from the state of the body, parts, or bones, it may reasonably be concluded that death recently occurred.

"Death" means the condition as defined in Iowa Code section 702.8.

"Declaration of paternity registry" means a registry for a putative father to declare paternity pursuant to Iowa Code section 144.12A. The declaration does not constitute an affidavit of paternity filed pursuant to Iowa Code section 252A.3A.

"Delayed birth record" means the registration of a live birth event occurring in Iowa one or more years after the date of birth which is clearly marked as delayed and shall show on its face the date of the delayed registration.

"Delayed death record" means the registration of a death event occurring in Iowa one or more years after the date of death which is clearly marked as delayed and shall show on its face the date of the delayed registration.

"Delayed marriage record" means the registration of a marriage event occurring in Iowa one or more years after the event which is clearly marked as delayed and shall show on its face the date of the delayed registration.

"Department" means the Iowa department of public health.

"Disinterment permit" means a permit which allows the removal of a dead human body or fetus from its original place of burial, entombment or interment for the purpose of autopsy or reburial.

"Emancipated minor" means a person younger than 18 years of age who has obtained the age of majority by court order.

"Fetal death" means a death prior to the complete expulsion or extraction from its mother of a product of human conception, irrespective of the duration of pregnancy which is not an induced termination of pregnancy. The death is indicated by the fact that, after such expulsion or extraction, the fetus does not breathe or show any other evidence of life such as beating of the heart, pulsation of the umbilical cord or definite movement of voluntary muscles. In determining a fetal death, heartbeats shall be distinguished from transient cardiac contractions, and respirations shall be distinguished from fleeting respiratory efforts or gasps.

"Filing" means the presentation of a certificate, report, or other record of a live birth, death, fetal death, adoption, marriage, dissolution, or annulment for registration pursuant to Iowa Code chapter 144.

"Final disposition" means the burial, interment, cremation, removal from the state, or other disposition of a dead body or fetus.

"Foundling" means a living infant of unknown parentage whose place of birth is where the infant is found and whose date of birth shall be determined by approximation.

"Funeral director" means a person licensed in Iowa to practice mortuary science pursuant to Iowa Code chapter 156.

"Gestational surrogate arrangement" or *"surrogate mother arrangement,"* as defined in Iowa Code section 710.11, means an arrangement whereby a female agrees to be artificially inseminated with the sperm of a donor, to bear a child, and to relinquish all rights regarding that child to the donor or donor couple.

"Health care provider" means an individual licensed under Iowa Code chapter 148, 148C, 148D, or 152 or any individual who provides medical services under the authorization of the licensee.

"Induced termination of pregnancy" means the use of any means to terminate the pregnancy of a woman known to be pregnant with the intent other than to produce a live birth or to remove a dead fetus as defined in Iowa Code section 144.29A(8).

"Institution" means a facility as defined in Iowa Code section 144.1(10), including "hospital" as defined in Iowa Code section 135B.1(3) but not including "birth center" as defined in Iowa Code section 135.61(2).

"Institutional health facility" means a hospital as defined in Iowa Code section 135B.1, including a facility providing medical or health services that is open 24 hours per day, seven days per week and that is a hospital emergency room or a health care facility as defined in Iowa Code section 135C.1.

"Jurisdiction" means the state or county to which legal authority for the system of vital statistics has been granted by statute.

"Last name" means surname.

"Lineal consanguinity" means the existence of a line of descent in which one person is descended in a direct lineal relationship to another: as between the registrant and the registrant's parent, grandparent, great-grandparent, and so upward, in the direct ascending line; or between the registrant and the registrant's child, grandchild, great-grandchild and so downward in the direct descending line; or any siblings of the registrant.

"Live birth" means the complete expulsion or extraction from its mother of a product of human conception, irrespective of the duration of pregnancy, which after such expulsion or extraction, breathes or shows any other evidence of life, such as beating of the heart, pulsation of the umbilical cord, or definite movement of voluntary muscles, whether or not the umbilical cord has been cut or the placenta is attached. In determining a live birth, heartbeats shall be distinguished from transient cardiac contractions, and respirations shall be distinguished from fleeting respiratory efforts or gasps.

"Marriage license valid date" means the day on which the marriage license becomes valid and on or after which the parties are authorized to marry. When the marriage license valid date is computed, the date of application shall be excluded. The marriage license shall become valid after the expiration of three calendar days after the date of application, unless earlier validated by a court of competent jurisdiction.

"Medical certification" means a statement which attests that the medical information reported on the certificate of death or fetal death is accurate to the best of the medical certifier's knowledge.

"Medical certifier" means an Iowa-licensed physician, physician assistant, advanced registered nurse practitioner, or medical examiner who attests that the death event has taken place and who determines the cause and manner of death.

"Medical examiner" means the medical legal officer who makes the determination of the cause of death in nonroutine deaths such as non-natural, sudden, or unattended deaths or other deaths which affect the public interest.

"Modification" means any change made to a record that has been accepted and registered, such as a correction, an amendment, a change after adoption or paternity determination, or any other change.

"Mutual consent voluntary adoption registry" means a registry which authorizes adult adopted children, adult siblings, and the biological parents of adult adoptees to register to obtain identifying birth information.

"Natural cause of death" means a death due to a disease or the aging process and not due to external causes.

"Newborn safe haven registration" means the registration of the birth of a living infant of unknown parentage who has been abandoned or left at some unknown time after birth in a location other than the place of delivery.

"Non-birthing institution" means a private or public hospital licensed pursuant to Iowa Code chapter 135B that does not have a licensed obstetric unit or is not licensed to provide obstetric services but may provide obstetric services on an emergency basis.

"Non-institution birth" means a live birth that occurs outside of an institution and not en route to an institution.

"Non-natural cause of death," pursuant to Iowa Code section 144.28(1)*"a,"* means the death is a direct or indirect result of physical, chemical, thermal, or electrical trauma, or drug or alcohol intoxication or other poisoning.

"Notification of record search" means the document issued to the applicant when the record requested cannot be located through a search of registered records. The document contains a certification statement, is printed on security paper, and has authentication seals and signatures.

"Officiant" means (1) a judge of the Iowa supreme court, court of appeals, or district court, including a district associate judge, an associate juvenile judge, or a judicial magistrate, and including a senior judge as defined in Iowa Code section 602.9202(3), or (2) a person ordained or designated as a leader of the person's religious faith.

"Physician" means an individual licensed pursuant to Iowa Code chapter 148.

"Physician assistant" means an individual licensed pursuant to Iowa Code chapter 148C.

"Presumptive death" means a death event presumed to have occurred in Iowa where no human body is found and a court of competent jurisdiction has determined the death has occurred.

"Putative father" means a man who is alleged to be or who claims to be the biological father of a child born to a woman to whom the man is not married at the time of the conception or birth of the child or at any time during the period between the conception and birth of the child.

"Record of death" means the compilation of those entries of a death, whether electronic or paper, which are contained in indexed systems which record the death event occurring in Iowa. "Record of death" shall include the certificate of death.

"Record of fetal death" means the compilation of those entries of a fetal death, whether electronic or paper, which are contained in indexed systems which record a fetal death event occurring in Iowa. "Record of fetal death" shall include the certificate of fetal death.

"Record of foreign born adoption" means the compilation of those entries of a live birth event for a child born in a foreign country and adopted by an Iowa resident. "Record of foreign born adoption" shall include the certificate of foreign birth and shall not constitute U.S. citizenship.

"Record of live birth" means the compilation of those entries of a live birth event, whether electronic or paper, which are contained in indexed systems which record a live birth event occurring in Iowa. "Record of live birth" shall include the certificate of live birth.

"Record of marriage" means the compilation of those entries of a marriage event, whether electronic or paper, which are contained in indexed systems which record a marriage event occurring in Iowa. "Record of marriage" shall include the certificate of marriage.

"Registrant" means the person named on the certificate as the person who was born, died, or was married.

"Registration" means the process by which vital statistics records are completed, filed, and incorporated by the state registrar in the official records.

"Report of dissolution or annulment" means the statistical report of dissolution or annulment, whether electronic or paper, excluding all entries indicated as confidential or for statistical information only.

"Report of termination of pregnancy" means the aggregated compilation of the information received by the department on terminations of pregnancies for each information item listed, with the exception of the report tracking number, the health care provider code, and any set of information for which the number is so small that the confidentiality of any person to whom the information relates may be compromised.

"Research" means the systematic investigation designed primarily to develop or contribute to scientific, medical, public health or psychosocial disciplines and generalized knowledge and not for private gain.

"Sealed" means the removal from inspection of any copy of an original certificate in the custody of the county registrar and the state registrar.

"Security paper" means standardized paper for issuing certified copies of vital record events that meets, at a minimum, national requirements for security features embedded within the paper to deter

tampering, counterfeiting, photocopying, or imaging in order to help prevent fraudulent use of the certified copy and prevent identity theft.

"Single parent birth" means any record of live birth for which there is a reference or statement on the certificate or entry which directly indicates "no" regarding "born in wedlock" or "married"; or any record of live birth for which there is reference or statement on the certificate or entry that either parent is "unknown" or "anonymous"; or any certificate or entry which reflects the omission or absence of the name of the father of the child.

"Spontaneous termination of pregnancy" means the occurrence of an unintended termination of pregnancy at any time during the period from conception to 20 weeks' gestation and is not a spontaneous termination of pregnancy at any time during the period from 20 weeks or greater which is reported to the department as a fetal death under Iowa Code section 144.29.

"Standard birth registration" means a vital record of a live birth event that occurred in Iowa which was submitted and accepted for registration within one year of the event.

"State registrar" means the director of the department or the director's designee.

"Stillbirth" means an unintended fetal death occurring after a gestation period of 20 completed weeks or more or an unintended fetal death of a fetus with a weight of 350 or more grams.

"System of vital statistics" or *"system"* means the registration, collection, preservation, amendment, and certification of vital statistics records, and activities and records related thereto including the data processing, analysis, and publication of statistical data derived from such records.

"Uncertified copy" means an unofficial copy of a registered vital record which is not printed on security paper and which does not contain any authentication by the issuing jurisdiction. Uncertified copies shall contain an overstamp such as: "Not for Legal Purposes," "Administrative Use Only," "Deceased," "For Genealogical Purposes Only," "Working Copy," or any other overstamp as authorized by the state registrar.

"Vital records" means certificates or reports of birth, death, fetal death, marriage, dissolution, annulment, and related data.

"Vital statistics" means data derived from reports, certificates, and records of live birth, death, fetal death, induced termination of pregnancy, marriage, dissolution of marriage or annulment, and data related thereto.

[**ARC 0483C**, IAB 12/12/12, effective 1/16/13; see Delay note at end of chapter]

641—95.2(144) Vital records and statistics. There is established a division in the department which shall install, maintain, and operate the system of vital statistics throughout the state. No system for the registration of births, deaths, fetal deaths, adoptions, marriages, dissolutions, and annulments shall be maintained in the state or any of its political subdivisions other than the one provided for in Iowa Code chapter 144, including, but not limited to, a system maintained by any agency or private entity.

95.2(1) No person shall prepare or issue any certificate which purports to be an original certified copy or a copy of a certificate of birth, death, fetal death, adoption, marriage, dissolution, or annulment or any subset of the data items taken from a certificate except as provided for in Iowa Code chapter 144 and authorized by the state registrar.

95.2(2) A vital record, index, or subset of data shall not be maintained in any other system or manner except as provided for in Iowa Code chapter 144 and authorized by the state registrar.

95.2(3) The state registrar and the county registrar shall not maintain or issue copies of any vital record of an event occurring outside the state registrar's or county registrar's jurisdiction except as provided for in Iowa Code chapter 144 and authorized by the state registrar.

95.2(4) To protect the integrity of vital records and to ensure their proper use, no vital record, index, or subset of data shall be posted to the World Wide Web or published in any other manner except as provided for in Iowa Code chapter 144 and pursuant to subrule 95.10(3) or as authorized by the state registrar.

[**ARC 0483C**, IAB 12/12/12, effective 1/16/13; see Delay note at end of chapter]

641—95.3(144) Forms—property of department. All forms, certificates and reports pertaining to the registration of vital events are the property of the department and shall be surrendered to the state registrar upon demand.

95.3(1) The forms supplied or approved for reporting vital events shall be used for official purposes as provided for by law, rules and instructions of the state registrar.

95.3(2) No forms, except those furnished or approved by the state registrar, shall be used in the reporting of vital events or the making of copies of vital records.

95.3(3) Security paper used to report vital events shall be maintained in a secure location accessible only to the state and county registrars and their employees for administrative purposes.

95.3(4) Security paper shall be used to issue certified copies of Iowa vital records and shall be maintained in a secure location accessible only to the state and county registrars and their employees for administrative purposes.

[**ARC 0483C**, IAB 12/12/12, effective 1/16/13; see Delay note at end of chapter]

641—95.4(144) Information by others.

95.4(1) Any person having knowledge of the facts shall furnish information that the person possesses regarding any birth, death, fetal death, adoption, marriage, dissolution, or annulment, upon demand of the state registrar.

95.4(2) Every person in charge of an institution, or the person's designee, shall maintain a record of personal particulars and data concerning each person admitted or confined to the institution pursuant to Iowa Code section 144.47. This record shall include information required by the standard certificate of birth, death, and fetal death forms issued under the direction of the state registrar. The record shall be made at the time of admission based on the information provided by such person, but when information cannot be obtained from the person, it shall be obtained from the most knowledgeable relative or person acquainted with the facts. The name and address of the person providing the information shall be a part of the record.

95.4(3) Records maintained under this rule shall be retained for a period of not less than ten years and shall be made available for inspection by the state registrar upon demand.

[**ARC 0483C**, IAB 12/12/12, effective 1/16/13; see Delay note at end of chapter]

641—95.5(144) Handling of vital records.

95.5(1) State equipment and state vital records shall not be handled or accessed except by the state registrar, the state registrar's employees, or other authorized personnel for administrative purposes.

95.5(2) The county registrar shall provide assistance to the public in accessing vital records designated as public records in the custody of the county registrar.

[**ARC 0483C**, IAB 12/12/12, effective 1/16/13; see Delay note at end of chapter]

641—95.6(144) Fees.

95.6(1) *Fees for services provided by state registrar or county registrar.* The following fees shall be charged and remitted for the various services provided by the state registrar or the county registrar.

a. The state registrar or county registrar, as applicable, shall charge a fee of $20 to conduct a search for a record. On and after July 1, 2019, this fee will revert to $15.

(1) The search fee shall include one certified copy of the record.

(2) For each additional certified copy of the same record, a $20 fee shall be charged. On and after July 1, 2019, this fee will revert to $15.

(3) If, following a search, no record is found, the $20 fee shall be retained. On and after July 1, 2019, this fee will revert to $15.

b. The state registrar shall charge a fee of $20 to prepare an adoption certificate, to amend a certificate, to amend a certificate of live birth to reflect a legal change of name, to prepare a delayed certificate, to process other administrative or legal actions, or for the search and preparation of copies of supporting documents on file in the state registrar's office. On and after July 1, 2019, this fee will revert to $15. No fee shall be charged for establishment of paternity.

c. The state registrar shall charge a fee of $25 to file a completed application for the mutual consent voluntary adoption registry.

d. The state registrar shall charge a fee of $5 to update applicant information maintained in the mutual consent voluntary adoption registry and the declaration of paternity registry.

e. The state registrar shall charge a fee of $20 to amend an abstract or other legal documentation in support of the preparation of a new certificate. On and after July 1, 2019, this fee will revert to $15.

f. The state registrar shall charge a fee of $35 to conduct a search for a record for the purpose of issuing a commemorative copy of a certificate of birth or a certificate of marriage pursuant to Iowa Code section 144.45A. Fees collected shall be deposited in the emergency medical services fund established in Iowa Code section 135.25.

g. The state registrar shall charge a fee of $20 to conduct a search for a certificate of fetal death for the purpose of issuing an uncertified copy of a certificate of birth resulting in stillbirth pursuant to Iowa Code section 144.31A. On and after July 1, 2019, this fee will revert to $15.

95.6(2) *Overpayments.* Any overpayment of $5 or less received by the state registrar for the copying of or search for vital records or for the preparation or amending of a certificate shall not be refunded and shall be retained by the department.

95.6(3) *Certified copy of modified vital record.* When an individual is in possession of a previously issued certified copy of a vital record and the original record is subsequently modified, the individual may request and receive a certified copy of the modified record without charge if the certified copy prior to modification is relinquished to the registrar's office that issued the certified copy, unless otherwise directed by the state registrar.

95.6(4) *Search of county registrar's records—fee for uncertified copy.* A person who is requesting an uncertified copy of a record in the custody of the county registrar shall conduct the search of the county files to locate the record. If a copy is requested, the county registrar may charge a fee of no more than $5 for an uncertified copy of the county record. The fee shall be retained by the county.

95.6(5) *Distribution of fees.*

a. All fees collected by the county registrar and the state registrar shall be distributed as follows:

(1) For fees collected by a county registrar, with the exception of the fee in subrule 95.6(4), the county registrar shall retain $4 of each $20 fee collected by that office. On and after July 1, 2019, this $20 fee will revert to $15. Fees collected shall be divided as follows:

1. For a birth certificate or a marriage certificate, the state registrar shall receive $13, and $3 shall be deposited in the general fund of the state, except for the fee collected pursuant to paragraph 95.6(1)*"f."* On and after July 1, 2019, the amount received by the state registrar will revert to $8.

2. For a death certificate, the state registrar shall receive $11, the office of the state medical examiner shall receive $3, and $2 shall be deposited in the general fund of the state. On and after July 1, 2019, the amount received by the state registrar will revert to $6.

(2) For fees collected by the state registrar, the state registrar shall retain all fees, with the exception of the fees in paragraph 95.6(1)*"a,"* of which the state registrar shall retain $14 of each $20 fee collected for the issuance of certified copies. On and after July 1, 2019, the fee collected will revert to $15 and the amount retained by the state registrar will revert to $9. The $6 balance of certified copy fees collected by the state registrar shall be divided as follows:

1. For a birth certificate or a marriage certificate, $6 shall be deposited in the general fund of the state.

2. For a death certificate, the office of the state medical examiner shall receive $3, and $3 shall be deposited in the general fund of the state.

b. All fees retained by the state registrar shall be added to the vital records fund established by the department pursuant to Iowa Code section 144.46A.

c. All fees received by the office of the state medical examiner shall be added to the operating budget established for the operation of that office.

95.6(6) *Fee for search to verify vital statistics record.* A fee shall be charged by the state registrar for each search conducted for the purpose of providing verification of vital statistics data to an agency authorized to receive such data under subrule 95.12(2).

a. The amount of the fee shall be determined in an agreement with the department and shall be dependent on the nature and scope of the project and the resources required to obtain the data requested.

b. The state registrar shall retain the full amount of all fees collected under this subrule in the vital records fund established pursuant to Iowa Code section 144.46A.

95.6(7) *Fee for researcher access to vital statistics data.* A fee shall be charged to each researcher who is provided access to vital statistics data in accordance with Iowa Code section 144.44 and the required agreement executed with the department. The amount of the fee shall be based on the nature and scope of the research project and resources required to obtain the data requested.

a. The state registrar shall allocate the fees for copies of birth, marriage, and death certificates provided to researchers pursuant to the distribution of fees set forth in subrule 95.6(5).

b. The state registrar shall retain in the vital records fund established pursuant to Iowa Code section 144.46A the full amount of fees collected from researchers for searching files or records to create a data file.

95.6(8) *Service member who died while on active duty—waiver of fee.* The certified copy fee for a birth certificate or a death certificate of a service member, as defined in Iowa Code section 29A.90, who died while on active duty shall be waived for a period of one year from the date of death. Application for the certified copy shall be made by an entitled family member as described in 641—95.8(144) of the deceased service member or the entitled family member's legal representative. Documentation shall be submitted at the time of application to substantiate the date of death and active duty status.

[**ARC 0483C**, IAB 12/12/12, effective 1/16/13; see Delay note at end of chapter; **ARC 1074C**, IAB 10/2/13, effective 1/1/14; see Delay note at end of chapter; **ARC 1402C**, IAB 4/2/14, effective 5/7/14]

641—95.7(144) General public access of vital records in the custody of the county registrar. A vital record may be in the custody of the county registrar if the event occurred in that county and the record is not excluded by statute or definition for purposes of confidentiality.

95.7(1) There shall be public access and the right to inspect in person all vital records in the custody of the county registrar after they are purged of confidential information.

95.7(2) Electronic devices, including but not limited to scanners, cameras, cell phones or laptops, shall not be used to secure information from county vital records.

95.7(3) Information inspected and copied shall not be published or used to establish an index or record of information at any other location except as authorized by Iowa Code chapter 144.

95.7(4) County registrars may issue uncertified copies of vital records held in the registrars' custody and accessible to the general public, except those records excluded by statute or at the direction of the state registrar.

a. Requests for uncertified copies shall be accepted solely through in-person application after the applicant has conducted the applicant's own search for the record at the county registrar's office.

b. Uncertified copies shall be issued on plain white paper and clearly stamped "not for legal purposes." Security paper provided by the state registrar shall not be used to produce records for uncertified copies.

95.7(5) County registrars shall not provide specific information from any vital record via telephone, fax, electronic file, Web site, written letter or verbally, except for administrative purposes with the state vital records office.

95.7(6) County registrars shall not produce lists of vital records for any agency, private business, or member of the general public.

95.7(7) Records of births prior to July 1, 1995, that have been determined to be single parent births shall not be in the custody of the county registrar or accessible to the public as a right under Iowa Code chapter 22.

95.7(8) Records of births on and after July 1, 1995, that have been determined to be single parent births shall be accessible to the public as a right under Iowa Code chapter 22.

95.7(9) For a record of death registered on or after April 5, 2012, for a decedent who died outside of the county of the decedent's residence, the state registrar shall send a clearly marked copy of the decedent's death certificate and any amendments to the county registrar of the county of the decedent's

residence. The county registrar shall incorporate the clearly marked copy of the county resident death certificate in the vital records system maintained by the county. Certified or uncertified copies of county resident death certificates shall be clearly marked as "county resident copy."
[**ARC 0483C**, IAB 12/12/12, effective 1/16/13; see Delay note at end of chapter]

641—95.8(144) Direct tangible interest in and entitlement to a vital record. Certified copies of vital records may be issued by the state registrar or county registrar upon written application, payment of the required fee pursuant to paragraph 95.6(1)*"a,"* and demonstration of a verifiable, direct tangible interest and entitlement.

95.8(1) The following persons shall be considered to have a direct tangible interest and entitlement and are authorized to obtain a certified copy of a vital record:

a. The registrant, if the registrant is of legal age, has reached the age of majority, or is an emancipated minor.

b. A member of the registrant's immediate legal family, including:

(1) Current spouse or surviving spouse;

(2) Children;

(3) Mother or father if listed on the registrant's birth certificate;

(4) Sibling, if sibling has reached the age of majority;

(5) Maternal grandparents, or paternal grandparents if the father is listed on the birth certificate; or

(6) Step-parent or step-child if:

1. Legal parent and step-parent are currently married at the time of application; or

2. Step-parent is the surviving spouse of the legal parent and not remarried.

c. The documented legal representative of the registrant or the registrant's immediate legal family, including:

(1) An attorney;

(2) A court-appointed guardian;

(3) A foster parent;

(4) A funeral director, for up to one year following the decedent's date of death; or

(5) A legal executor.

d. Other persons who demonstrate a direct tangible interest and entitlement when it is shown that the certified copy is needed to determine or protect a personal or property interest.

95.8(2) The following persons shall not be deemed to have direct tangible interest and entitlement or be authorized to secure vital records:

a. Biological parents of adopted persons in the absence of a court order from the court of competent jurisdiction;

b. Biological family members of adopted persons;

c. Adopted persons requesting biological family records; or

d. Commercial firms or agencies requesting lists of vital record events, or lists of names, or lists of addresses.
[**ARC 0483C**, IAB 12/12/12, effective 1/16/13; see Delay note at end of chapter]

641—95.9(144) Search and issuance of a certified copy of a vital record. The search and issuance of a certified copy of a vital record shall be requested from the state registrar or county registrar.

95.9(1) Only entitled applicants as described in rule 641—95.8(144) may submit requests for certified copies of vital records.

95.9(2) A person requesting a search and issuance of a certified copy of a vital record shall provide in writing the following:

a. The name of the person or persons whose vital record is to be searched;

b. The purpose of such request;

c. The relationship to the registrant of the person making the request; and

d. The notarized signature and the address of the person making the request.

95.9(3) In addition to a completed written application, the applicant shall provide:

a. A current, legible government-issued photo identification of the applicant making the request or other identification documents acceptable to the state registrar; and

b. Payment of the required fee before the search is conducted.

95.9(4) The state registrar and county registrar shall have the authority to require additional supporting documents to prove direct tangible interest and entitlement pursuant to rule 641—95.8(144).

95.9(5) If, after the search is conducted, no record is on file, the state registrar or county registrar shall issue a "notification of record search" on certified paper, and the fee for the search shall be retained pursuant to paragraph 95.6(1)*"a."*

[**ARC 0483C**, IAB 12/12/12, effective 1/16/13; see Delay note at end of chapter]

641—95.10(144) Search and issuance for genealogy or family history. The search and issuance of a vital record for genealogy may be requested from the state registrar or county registrar upon written application and payment of the required fee pursuant to paragraph 95.6(1)*"a."*

95.10(1) The county registrar may issue certified copies of a vital record for genealogy or family history to an applicant who can satisfactorily demonstrate a line of direct lineal consanguinity and to aunts, uncles, and cousins not past twice removed.

95.10(2) The county registrar may issue uncertified copies of a vital record for genealogy or family history to any member of the general public except those records excluded by statute or at the direction of the state registrar. Requests for uncertified copies shall be accepted solely through in-person application after the applicant has conducted a search for the record at the county registrar's office.

95.10(3) The state registrar may issue uncertified copies of a vital record for genealogy or family history to an applicant who is conducting genealogical research and can satisfactorily demonstrate a line of direct lineal consanguinity and to aunts, uncles, and cousins not past twice removed if the event occurred 125 years ago or more for birth records and 75 years ago or more for marriage and death records.

95.10(4) All copies issued for genealogy or family history shall be clearly marked "for genealogical purposes only."

95.10(5) No copy shall be issued for genealogy or family history if the registrant is known to be living.

95.10(6) If, after the search is conducted, no record is on file, the state registrar or county registrar shall issue a "notification of record search" on certified paper, and the fee for the search shall be retained pursuant to paragraph 95.6(1)*"a."*

[**ARC 0483C**, IAB 12/12/12, effective 1/16/13; see Delay note at end of chapter]

641—95.11(144) Registrars' responsibility for maintenance of confidentiality.

95.11(1) The state registrar and county registrar shall maintain the confidentiality of the following material, records, and information:

a. Entries indicated as confidential or statistical in nature on the face of the record or otherwise confidential by law;

b. Records of fetal death or stillbirth, adoption, legal change of name, and single parent births occurring prior to July 1, 1995; and

c. Any record which is ordered sealed by the state registrar or pursuant to a court order.

95.11(2) The county registrar shall take all necessary steps to ensure that confidential information reflected on vital records has been redacted from general public access. If confidential information is included with accessible information, only accessible information shall be made available to the general public for examination.

95.11(3) The county registrar shall employ at a minimum all of the following methods to ensure confidentiality:

a. Permanently cover or remove, by appropriate means, confidential information;

b. Promptly process the notice to seal a record as directed by the state registrar; and

c. Seal and not reproduce confidential information when copies of vital records are made.

95.11(4) The county registrar may charge reasonable administrative costs to reflect the expenses for efforts required to allow general public access, examination and the assurance of confidentiality of this material and information pursuant to the authority of Iowa Code chapter 22.

a. The administrative cost is to be paid by persons who request the services provided by the county registrar, including supervising, copying or providing a suitable place for such work.

b. The county registrar shall retain all administrative costs collected to allow general public access, examination, and the assurance of confidentiality of the vital record and information pursuant to the authority of Iowa Code chapter 22.

[**ARC 0483C**, IAB 12/12/12, effective 1/16/13; see Delay note at end of chapter]

641—95.12(144) Disclosure of data.

95.12(1) The state registrar may disclose data from the system of vital statistics to federal, state, county or municipal agencies of government that request such data in the conduct of their official duties, subject to conditions the state registrar may impose to ensure that the use of the data is limited to official purposes.

a. The aforementioned agencies shall not provide the certified copy or a copy of the vital record, or release information contained therein, to the person named on the certificate, a member of the person's legal family, or the person's legal representative.

b. Certified copies issued to the aforementioned agencies shall be appropriately stamped, for example, "administrative purposes only" or "for veteran affairs purposes only."

95.12(2) Confidential verifications of the facts contained in vital records may be furnished by the state registrar to any federal, state, county or municipal government agency or other entity in the conduct of the agency's or entity's official duties, subject to conditions the state registrar may impose to ensure that the verification is limited to official purposes.

a. Such confidential verifications shall be on forms prescribed and furnished by the state registrar or on forms furnished by the requesting agency or entity and acceptable to the state registrar, or the state registrar may authorize the verification in other ways.

b. The aforementioned agencies and entities shall not provide the original or a copy of the verified certificate, or release information contained therein, to the person named on the certificate, a member of the person's legal family, or the person's legal representative.

95.12(3) The state registrar may permit the use of data from vital statistics for research purposes subject to conditions the state registrar may impose to ensure the use of the data is limited to such research purposes. No data shall be furnished from vital statistics for research purposes until the state registrar has prepared in writing the conditions under which the data may be used and has received an agreement signed by a responsible agent of the research organization agreeing to meet and conform to such conditions.

95.12(4) The state registrar may transmit to the county registrar data needed to produce certified copies of vital records pursuant to rule 641—95.8(144).

95.12(5) The state registrar may transmit to the statewide immunization registry information from birth certificates for the sole purpose of identifying those children in need of immunizations. The state registrar may impose conditions to ensure that the use of the information is limited to official purposes.

95.12(6) The state medical examiner or the county medical examiner may request an uncertified copy of a death certificate before the death certificate is accepted and filed at the county registrar's office.

a. The copy shall be clearly stamped "administrative purposes only."

b. The death certificate shall be for the sole use of the state medical examiner or county medical examiner and shall not be used as a legal document, be distributed, be copied or be maintained other than to be made a part of the investigatory file.

c. If the state medical examiner or any county medical examiner determines the death does not warrant further investigation, the state medical examiner or county medical examiner shall destroy the uncertified copy of the death certificate.

[**ARC 0483C**, IAB 12/12/12, effective 1/16/13; see Delay note at end of chapter]

641—95.13(144) Preparation of certified copies. Certified copies of vital records may be prepared and issued by the state registrar or the county registrar pursuant to rules 641—95.3(144) and 641—95.9(144).

95.13(1) Certified copies of vital records may be made by mechanical, electronic, or other reproductive processes, except for confidential information. Certified copies shall be issued using security paper that is prescribed by the state registrar.

95.13(2) When a certified copy is issued, each certification shall contain a statement certifying that the facts are the true facts recorded in the issuing office, the date issued, the name of the issuing office, the registrar's signature or an authorized copy thereof, and the seal of the issuing office.

95.13(3) No person shall prepare or issue any certificate which purports to be an original, certified copy, or copy of a certificate of birth, death, fetal death, or marriage.

[**ARC 0483C**, IAB 12/12/12, effective 1/16/13; see Delay note at end of chapter]

641—95.14(144) Cancellation of fraudulent records.

95.14(1) When the state registrar determines that a certificate was registered through fraud or misrepresentation, the state registrar shall give to the registrant a notice in writing of the state registrar's intention to cancel said certificate.

95.14(2) The notice of cancellation shall give the registrant an opportunity to appear and show cause why the certificate shall not be canceled.

a. The notice may be served on the registrant, or, in the case of a minor or incompetent person, on the parent or guardian, by the forwarding of the notice by certified mail to the last-known address on file in the office of the state registrar.

b. The certificate shall not be available for certification unless the registrant, parent or guardian within 30 days after the date of mailing the notice shows cause satisfactory to the state registrar why the certificate shall not be canceled.

95.14(3) Upon presentation to the state registrar of a court order stating a marriage certificate was registered through fraud or misrepresentation, the state registrar shall remove said record from the vital statistics system. The state registrar shall order the county registrar to remove any record related to the marriage.

[**ARC 0483C**, IAB 12/12/12, effective 1/16/13; see Delay note at end of chapter]

641—95.15(144) Unlawful acts.

95.15(1) *Serious misdemeanors.* Any person who reports information required under Iowa Code chapter 144 and who commits any of the following acts is guilty of a serious misdemeanor:

a. Willfully and knowingly makes any false statement in a report, record, or certificate required to be filed or in an application for an amendment or willfully and knowingly supplies false information intending that such information be used in the preparation or amendment of any such report, record, or certificate.

b. Without lawful authority and with the intent to deceive, makes, alters, amends, or mutilates any report, record, or certificate required to be filed or a certified copy of such report, record, or certificate.

c. Willfully and knowingly uses or attempts to use or furnish to another for use for any purpose of deception any certificate, record, or report or certified copy thereof.

d. Willfully and knowingly alters, amends, or mutilates any copy, certified copy, record or report.

e. Willfully, with the intent to deceive, uses or attempts to use any certificate of birth or certified copy of a record of birth knowing that such certificate or certified copy was issued based upon a record which is false in whole or in part or which relates to the birth of another person.

f. Willfully and knowingly furnishes a certificate of birth or certified copy of a record of birth with the intention that it be used by a person other than the person to whose birth the record relates.

g. Disinterring a body in violation of Iowa Code section 144.34.

h. Knowingly violates a provision of Iowa Code section 144.29A.

95.15(2) *Simple misdemeanors.* Any person committing any of the following acts is guilty of a simple misdemeanor:

a. Knowingly transports or accepts for transportation, interment, or other disposition a dead body without an accompanying permit as provided in Iowa Code sections 144.32, 144.33, and 144.34.

b. Refuses to provide information required by Iowa Code chapter 144.

c. Willfully violates any of the provisions of Iowa Code chapter 144 or refuses to perform any of the duties imposed upon the person.
[**ARC 0483C**, IAB 12/12/12, effective 1/16/13; see Delay note at end of chapter]

641—95.16(144) Enforcement assistance.

95.16(1) The department shall report cases of alleged violations to the proper county attorney, with a statement of the facts and circumstances, for such action as is appropriate.

95.16(2) Upon request of the department, the attorney general shall assist in the enforcement of the provisions of Iowa Code chapter 144.
[**ARC 0483C**, IAB 12/12/12, effective 1/16/13; see Delay note at end of chapter]

These rules are intended to implement Iowa Code chapter 144.

[Filed ARC 0483C (Notice ARC 0376C, IAB 10/3/12), IAB 12/12/12, effective 1/16/13][1]
[Filed ARC 1074C (Notice ARC 0926C, IAB 8/7/13), IAB 10/2/13, effective 1/1/14][2]
[Filed ARC 1402C (Notice ARC 1294C, IAB 1/22/14), IAB 4/2/14, effective 5/7/14]

[1] January 16, 2013, effective date of the rescission of Chapter 95 and the adoption of new Chapter 95 [ARC 0483C] delayed until adjournment of the 2013 General Assembly by the Administrative Rules Review Committee at its meeting held January 8, 2013; delay lifted at the meeting held March 8, 2013.

[2] January 1, 2014, effective date of 95.6(2) [ARC 1074C, Item 2] delayed 70 days by the Administrative Rules Review Committee at its meeting held October 8, 2013.

CHAPTER 96
BIRTH REGISTRATION

[Prior to 12/12/12, see [641] 95.1 to 95.4, Ch 99, 100.3]

641—96.1(144) Definitions. For the purpose of this chapter, the definitions in 641—Chapter 95 shall apply.
[**ARC 0483C**, IAB 12/12/12, effective 1/16/13; see Delay note at end of chapter]

641—96.2(144) Forms—property of department. All forms, certificates and reports pertaining to the registration of vital events are the property of the department and shall be surrendered to the state registrar upon demand.

96.2(1) The forms supplied or approved for reporting birth events shall be used for official purposes as provided for by law, rules and instructions of the state registrar.

96.2(2) No forms, except those furnished or approved by the state registrar, shall be used in the reporting of birth events or the making of copies of vital records.
[**ARC 0483C**, IAB 12/12/12, effective 1/16/13; see Delay note at end of chapter]

641—96.3(144) Standard birth registration—up to seven days.

96.3(1) A certificate of live birth for each live birth which occurs in this state shall be filed as directed by the state registrar within seven days after the birth.

96.3(2) The person responsible for registering the certificate of live birth pursuant to rules 641—96.5(144), 641—96.6(144) and 641—96.7(144) shall:

a. Utilize the official birth worksheet to report all information and any additional documentation as needed to complete the standard form for a certificate of live birth; and

b. Submit all required fees and reports with the birth registration.
[**ARC 0483C**, IAB 12/12/12, effective 1/16/13; see Delay note at end of chapter]

641—96.4(144) Standard birth registration—seven days to one year.

96.4(1) After seven days but within one year, a certificate of live birth for each live birth which occurs in this state shall be filed as directed by the state registrar.

96.4(2) The person responsible for registering the certificate of live birth pursuant to rules 641—96.5(144), 641—96.6(144) and 641—96.7(144) shall:

a. Utilize the official birth worksheet to report all information and any additional documentation as needed to complete the standard form for a certificate of live birth; and

b. Submit all required fees and reports with the birth registration.
[**ARC 0483C**, IAB 12/12/12, effective 1/16/13; see Delay note at end of chapter]

641—96.5(144) Birthing institutions.

96.5(1) When a live birth occurs in an institution or en route to an institution, the person in charge of the institution or the person's designated representative, utilizing the official birth worksheet, shall within seven days:

a. Obtain the personal data;

b. Obtain the signature of the mother or her legal spouse or other signature as directed by the state registrar;

c. Provide the medical information required;

d. Certify that the child was born alive at the place, date, and time stated; and

e. File the certificate using the electronic birth registration system or as directed by the state registrar.

96.5(2) The birthing institution shall submit the fee report and remit the fees to the state registrar pursuant to rule 641—96.16(144).

96.5(3) The birthing institution shall maintain the birth worksheet for a minimum of ten years.

96.5(4) Upon demand of the state registrar, the birth worksheet and other information about the birth event shall be made available for inspection by the state registrar.
[**ARC 0483C**, IAB 12/12/12, effective 1/16/13; see Delay note at end of chapter; **ARC 1075C**, IAB 10/2/13, effective 11/6/13]

641—96.6(144) Non-birthing institutions.

96.6(1) Institutions that do not register birth records through the electronic birth registration system shall request instructions from the state registrar.

96.6(2) The person in charge of the non-birthing institution or the person's designee shall submit to the state registrar for registration of the live birth at a minimum the following:

a. A cover letter that is on business letterhead of the institution and that identifies the live birth submitted for registration, supports the facts of the live birth, and contains the original signature of the person responsible for registering the live birth;

b. A copy of the hospital delivery report, emergency department admittance, or physician notes;

c. The original Iowa official birth worksheet completed and signed by the mother, or her legal spouse, or as directed by the state registrar; and

d. Payment of the fees, which shall be included with the birth worksheet.

[**ARC 0483C**, IAB 12/12/12, effective 1/16/13; see Delay note at end of chapter; **ARC 1075C**, IAB 10/2/13, effective 11/6/13]

641—96.7(144) Non-institution birth.

96.7(1) In case of a non-institution Iowa live birth, the official non-institution birth worksheet shall be completed and filed with the state registrar by one of the following in the indicated order of priority:

a. The physician in attendance at or immediately after the live birth.

b. Any other person in attendance at or immediately after the live birth.

c. The mother or her legal spouse.

d. The person in charge of the premises where the live birth occurred.

96.7(2) Evidence in support of the facts of live birth shall be included in a cover letter, which shall contain the notarized signature of the person responsible for registering the birth. A certificate of live birth shall be completed and filed upon presentation of the following clear and convincing evidence by the individual responsible for filing the certificate:

a. Evidence of pregnancy including:

(1) Prenatal record;

(2) A statement from a physician, certified nurse midwife, or other health care provider qualified to determine pregnancy;

(3) A statement from a public health nurse or other health care provider documenting a prenatal home visit; or

(4) Other evidence acceptable to the state registrar.

b. Evidence the infant was born alive including:

(1) A statement from the physician, certified nurse midwife or other health care provider who saw or examined the infant;

(2) A statement from a public health nurse or other health care provider documenting a postnatal home visit; or

(3) Other evidence acceptable to the state registrar.

c. Clear and convincing evidence acceptable to the state registrar of the mother's presence in this state at the reported place and date of the live birth.

96.7(3) An Iowa-licensed certified nurse midwife may preregister with the state registrar by submitting a dated statement on business letterhead identifying the midwife's business name, if applicable, printed full name and original signature of the midwife, professional title, license number, address and telephone number.

a. Certified nurse midwives who are preregistered shall submit to the state registrar for registration of the live birth at a minimum the following:

(1) A cover letter that is on the business letterhead, that identifies the live birth submitted for registration, that supports the facts of the live birth, and that contains the original signature of the person responsible for registering the live birth;

(2) The original official non-institution birth worksheet completed and signed pursuant to subrule 96.7(5) or as directed by the state registrar; and

(3) Payment of fees, which shall be included with the birth worksheet.

b. It is the responsibility of the individual preregistering to update any information provided in the individual's original registration.

96.7(4) Certified nurse midwives not preregistered prior to submitting a certificate of live birth for registration shall follow subrules 96.7(1), 96.7(2) and 96.7(5) for all live births the midwives attend outside a birthing institution.

96.7(5) The official non-institution birth worksheet shall include a notarized signature of the mother or her legal spouse and shall be accompanied by a clear photocopy of that person's current government-issued photo identification. If photo identification is unavailable, other identifying documentation may be acceptable to the state registrar.

[**ARC 0483C**, IAB 12/12/12, effective 1/16/13; see Delay note at end of chapter; **ARC 1075C**, IAB 10/2/13, effective 11/6/13]

641—96.8(144) Gestational surrogate arrangement birth registration. Establishment of a certificate of live birth for a child born of a gestational surrogate arrangement shall conform to the process established pursuant to rule 641—99.15(144).

[**ARC 0483C**, IAB 12/12/12, effective 1/16/13; see Delay note at end of chapter]

641—96.9(144) Foundling birth registration.

96.9(1) The person assuming physical custody of a foundling shall, within one business day of finding the infant, contact the state registrar for specific directions and guidance for filing the certificate of live birth.

96.9(2) Foundling registration shall be completed in the standard manner by the state registrar pursuant to Iowa Code section 144.14. Within five days after assuming physical custody of the foundling, the custodian of the foundling shall provide on the official birth worksheet the following minimum birth data and other data required by the state registrar:

a. The date when and the place where the child was found;

b. The sex, color or race, and approximate age of the child;

c. The name and address of the person or institution that has assumed physical custody of the child;

d. The name given to the child by the custodian;

e. The name, title, and license number, if any, of the person acting as the certifier to the facts of the foundling registration;

f. Parentage information, if the parent is known;

g. A cover letter with supporting documentation; and

h. Any additional information known.

96.9(3) The place where the child was found shall be entered as the place of birth and the date of birth shall be determined by approximation. The information provided on the official birth worksheet shall constitute the certificate of live birth.

96.9(4) The record shall be on file only at the state registrar's office, and all supporting documentation shall be placed in a sealed file, which shall be opened only by order of a court of competent jurisdiction or for vital records administrative purposes.

96.9(5) Pursuant to Iowa Code section 144.14, if the child is properly identified after the registration, the certificate of live birth shall be reestablished as needed and all records pertaining to the foundling registration shall be sealed along with the original supporting documentation, which shall be opened only by order of a court of competent jurisdiction or for vital records administrative purposes.

[**ARC 0483C**, IAB 12/12/12, effective 1/16/13; see Delay note at end of chapter]

641—96.10(144) Newborn safe haven registration.

96.10(1) Newborn safe haven registration procedures shall apply to living infants who have been abandoned or left at an institutional health facility.

96.10(2) The person assuming physical custody of the living infant pursuant to Iowa Code section 233.2(2)*"a"* shall, within one business day of assuming custody, contact the state registrar for specific directions and guidance for registering the birth.

96.10(3) If the name of the parent is unknown, newborn safe haven registration shall be completed in the standard manner by the state registrar pursuant to Iowa Code section 144.14. Within five days after assuming physical custody of the infant, the custodian shall provide on the official birth worksheet the following minimum birth data and other data required by the state registrar:

a. The date when and the place where the child was found;

b. The sex, color or race, and approximate age of the child;

c. The name and address of the person or institution that has assumed physical custody of the child;

d. The name given to the child by the custodian;

e. The name, title, and license number, if any, of the person acting as the certifier to the facts of the newborn safe haven registration;

f. A cover letter with supporting documentation; and

g. Any additional information known.

96.10(4) If the name of the parent is disclosed to the institutional health facility, the facility shall file the certificate of live birth as required pursuant to Iowa Code sections 144.13 and 233.2(2)*"c."*

96.10(5) Pursuant to Iowa Code section 144.14, if the child is properly identified after the newborn safe haven registration, the birth record shall be reestablished as needed and all records pertaining to the newborn safe haven registration shall be sealed along with the original supporting documentation, which shall be opened only by order of a court of competent jurisdiction or for vital records administrative purposes.

96.10(6) The record shall be on file only at the state registrar's office, and all supporting documentation shall be placed in a sealed file which shall be opened only by order of a court of competent jurisdiction or for vital records administrative purposes. The confidentiality of the live birth certificate shall be maintained pursuant to Iowa Code sections 233.2(2)*"c"* and 144.43.

[**ARC 0483C**, IAB 12/12/12, effective 1/16/13; see Delay note at end of chapter]

641—96.11(144) Birth registration following a foreign-born adoption.

96.11(1) A certificate of foreign birth shall be established by the state registrar for a child born in a foreign nation upon the state registrar's receipt of a completed Certificate of Adoption Report form from an Iowa court of competent jurisdiction or upon request of the resident adoptive parent or parents and the state registrar's receipt of all of the following documents:

a. The authenticated adoption decree in both the foreign language and the English translation, which shall contain the official signature of the translator, or a certified copy of an adoption decree from an Iowa court of competent jurisdiction;

b. If the decree does not contain information to establish the certificate of foreign birth, the adoptee's authenticated birth certificate in both the foreign language and the English translation, which shall contain the official signature of the translator;

c. Evidence of the adoptee's permanent residence such as a passport or citizenship papers;

d. A certified copy of the certificate of live birth of each adoptive parent; and

e. A notarized statement that is on letterhead from the licensed adoption agency or certified adoption investigator and that establishes the parent or parents were residents of Iowa at the time the adoption was final in the foreign nation. The statement will not be required if the parent's or parents' Iowa address is shown in the adoption documents.

96.11(2) The certificate of foreign birth shall not constitute U.S. citizenship.

96.11(3) The state registrar shall charge the adoptive parent or parents the appropriate fee for the registration of a certificate of foreign birth for a foreign-born child adopted by a parent who resided in Iowa at the time of adoption pursuant to Iowa Code section 144.13A.

96.11(4) Administrative and certified copy fees shall be charged and remitted as provided in rule 641—95.6(144).

96.11(5) The evidence presented shall be on file only at the state registrar's office, and all supporting documentation shall be placed in a sealed file which shall be opened only by order of a court of competent jurisdiction or for vital records administrative purposes.
[**ARC 0483C**, IAB 12/12/12, effective 1/16/13; see Delay note at end of chapter]

641—96.12(144) Birth registration fees. A fee is required for each birth registered pursuant to Iowa Code sections 144.13, 144.13A, 144.15, 144.18, 144.23, 144.25A, and 600.15.

96.12(1) The parents shall be charged and the person responsible for filing the certificate of live birth shall remit to the state registrar the $20 fee for the standard registration of a certificate of live birth and the $15 fee for a certified copy of the birth certificate pursuant to Iowa Code section 144.13A.

96.12(2) The individual filing a delayed certificate of live birth shall be charged and shall remit to the state registrar the $20 fee for the registration of a delayed certificate of live birth for a registrant 17 years of age or younger pursuant to Iowa Code sections 144.13A, 144.15, and 144.18.

96.12(3) The adoptive parents shall be charged and shall remit to the state registrar the $20 fee for the registration of a certificate of foreign birth pursuant to Iowa Code sections 144.13A and 144.25A.
[**ARC 0483C**, IAB 12/12/12, effective 1/16/13; see Delay note at end of chapter]

641—96.13(144) Fee collection. If a person responsible for the registration of a certificate of live birth under Iowa Code section 144.13 is not the parent, the person shall collect the fees from the parent and remit the fees to the state registrar.

96.13(1) The person collecting the fee on behalf of the state registrar shall not charge an administrative fee for collection of the registration and certified copy fees pursuant to Iowa Code section 144.13A(3).

96.13(2) A person is discharged from the duty to collect and remit the fees when the person has made a good-faith effort to collect the fees from the parent or has established that the fees are to be waived pursuant to Iowa Code section 144.13A(3).
[**ARC 0483C**, IAB 12/12/12, effective 1/16/13; see Delay note at end of chapter]

641—96.14(144) Waivers. The registration fee and certified copy fee are waived if the expenses of the birth are reimbursed under the medical assistance program established by Iowa Code chapter 249A or if the parent is indigent and unable to pay the expenses of the birth and no other means of payment is available to the parent.
[**ARC 0483C**, IAB 12/12/12, effective 1/16/13; see Delay note at end of chapter]

641—96.15(144) Fee deposit. Birth registration and certified copy fees collected on behalf of the state registrar and forwarded to the state registrar shall be remitted to the treasurer of state for deposit in the appropriate state fund.
[**ARC 0483C**, IAB 12/12/12, effective 1/16/13; see Delay note at end of chapter]

641—96.16(144) Responsibilities of institutions. Institutions responsible for filing certificates of live birth shall collect both the registration fee and the certified copy fee from the parent.

96.16(1) The institution shall complete the Summary of Fee Report for Birth Registration and Certified Copy form. The institution shall submit the completed form and the total fee amount by check or money order, to the state registrar, within seven days of the live birth or as directed by the state registrar. All live births shall be reported and indicate for each birth that:

a. The fee was collected for the registration and certified copy;

b. The fee was waived, as applicable, and the reason for waiver; or

c. No fee was collected after a good-faith effort was made.

96.16(2) If a late birth registration fee is received, it shall be noted on the original Summary of Fee Report for Birth Registration and Certified Copy form.

96.16(3) The institution shall maintain copies of the submitted Summary of Fee Report for Birth Registration and Certified Copy form for three state fiscal years.
[**ARC 0483C**, IAB 12/12/12, effective 1/16/13; see Delay note at end of chapter]

641—96.17(144) Responsibility for births occurring in non-institutions and non-birthing institutions.

96.17(1) The state registrar shall collect the registration and certified copy fees and complete a Summary of Fee Report for Birth Registration and Certified Copy form.

96.17(2) If a late birth registration fee is received, it shall be noted on the original Summary of Fee Report for Birth Registration and Certified Copy form.

[**ARC 0483C**, IAB 12/12/12, effective 1/16/13; see Delay note at end of chapter]

641—96.18(144) Delayed birth registration—one year or more after event. All Iowa births registered one year or more after the date of the birth shall be prepared on a Delayed Certificate of Live Birth form. The state registrar shall require documentary evidence to prove the facts of the birth pursuant to subrule 96.18(2). The delayed birth record shall be registered and maintained solely at the state registrar's office.

96.18(1) *Application—certificate form.* A completed Delayed Certificate of Live Birth form shall be signed before a notary and filed with the state registrar by the following applicants in the indicated order of priority:

a. The registrant, if 18 years of age or older, whose birth occurred in Iowa but was not recorded within one year of the birth;

b. The registrant's parent or current legal court-appointed guardian; or

c. If no parent or legal guardian exists, a member of the registrant's family who has direct tangible interest and entitlement and who is competent to affirm to the accuracy of the information.

96.18(2) *Facts to be established.*

a. The applicant shall submit a notification of record search certified by the state registrar, which shall indicate that no prior certificate of live birth is on file for the person whose delayed birth record is to be filed. The notification of record search shall be returned to the applicant and shall not be exchanged for a certified copy of delayed certificate of live birth.

b. The applicant shall substantiate the following with documentary evidence:

(1) The full name of the registrant at the time of the birth, except that the delayed certificate may reflect the name established by adoption or legitimation when such evidence is submitted;

(2) The date and place of the birth;

(3) The full name of the mother prior to any marriage as it is listed on her birth certificate;

(4) The full name of the mother at the time of the birth; and

(5) The full name of the mother's legal spouse. However, if the mother was not married at the time of conception or birth or at any time during the period between conception and birth, the name of a second parent shall not be entered on the delayed certificate unless the child has been adopted or legitimated or parentage has been determined by a court of competent jurisdiction.

96.18(3) *Documentary evidence.*

a. To be acceptable for purposes of registration, the name of the registrant and the date and place of birth entered on a Delayed Certificate of Live Birth form shall be supported at a minimum by the following documentary evidence:

(1) Two pieces of dated documentary evidence if the Delayed Certificate of Live Birth form is filed within seven years after the registrant's date of birth; or

(2) Three pieces of dated documentary evidence if the Delayed Certificate of Live Birth form is filed seven years or more after the registrant's date of birth.

b. Each piece of documentary evidence must be from an independent source. Facts of parentage shall be supported by at least one of the documents.

c. Documentary evidence shall be in the form of the original record, a certified copy thereof, or a notarized statement from the custodian of the record or document on the custodian's letterhead.

d. All documentary evidence submitted shall consistently support the facts of birth to be established.

e. All documentary evidence shall have been executed at least five years prior to the date of filing or shall have been established prior to the registrant's seventh birthday.

f. Documents not acceptable to establish a delayed certificate of live birth include, but are not limited to:

(1) Baptismal record,

(2) Confirmation record,

(3) Family bible entries,

(4) Hospital commemorative birth certificate,

(5) Crib card,

(6) Cradle roll,

(7) Baby book memento, and

(8) Personal affidavit.

96.18(4) *Abstraction and certification by the state registrar.* The state registrar shall abstract on the Delayed Certificate of Live Birth form a description of each document submitted to support the facts of birth. This description shall include:

a. The title or description of the document;

b. The name and address of the custodian who has attested to the fact on the original documents in the custodian's custody;

c. The date of the original filing of the document being abstracted; and

d. The information regarding the registrant's birth and parentage.

96.18(5) *Acceptance of documentary evidence for registration.*

a. The state registrar shall by signature certify that:

(1) No prior certificate of live birth is on file for the person whose birth is to be recorded;

(2) The evidence has been reviewed and substantiates the alleged facts of the birth; and

(3) The abstract of the evidence appearing on the Delayed Certificate of Live Birth form accurately reflects the nature and content of the documents.

b. All documents submitted in support of the delayed registration of live birth shall be returned to the applicant after review, abstraction, and registration.

96.18(6) *Denial of registration.*

a. When the applicant does not submit substantiating evidence or the state registrar finds reason to question the validity or adequacy of the evidence submitted to establish a delayed certificate of live birth, the state registrar shall not register the delayed certificate of live birth. The written notice of refusal from the state registrar shall include:

(1) The rejected form;

(2) The Delayed Birth Evidence Refusal form; and

(3) Information related to the applicant's right of appeal to the district court pursuant to Iowa Code sections 144.17 and 144.18.

b. The application to establish a delayed certificate of live birth shall be dismissed if not actively pursued within six months of the date the notice of refusal was sent to the applicant.

96.18(7) *Duties of the county registrar.* The county registrar may assist the registrant, registrant's parent, or current court-appointed guardian in the completion and notarization of the delayed form, excluding the portion restricted for state use only. The county registrar may forward the form, documents and fees to the state registrar for final review and possible acceptance.

96.18(8) *Fees.* Administrative and certified copy fees shall be charged as provided in rule 641—95.6(144).

[**ARC 0483C**, IAB 12/12/12, effective 1/16/13; see Delay note at end of chapter; **ARC 1075C**, IAB 10/2/13, effective 11/6/13]

These rules are intended to implement Iowa Code sections 144.12, 144.13, 144.13A, 144.14, 144.15, 144.17, 144.18, 233.2(2)*"c"* and 600.15.

[Filed ARC 0483C (Notice ARC 0376C, IAB 10/3/12), IAB 12/12/12, effective 1/16/13][1]

[Filed ARC 1075C (Notice ARC 0925C, IAB 8/7/13), IAB 10/2/13, effective 11/6/13]

[1] January 16, 2013, effective date of the rescission of Chapter 96 and the adoption of new Chapter 96 [ARC 0483C] delayed until adjournment of the 2013 General Assembly by the Administrative Rules Review Committee at its meeting held January 8, 2013; delay lifted at the meeting held March 8, 2013.

CHAPTER 97
DEATH REGISTRATION AND DISPOSITION OF DEAD HUMAN BODIES

[Prior to 12/12/12, see [641] 98.2, Chs 99, 101]

641—97.1(144) Definitions. For the purpose of this chapter, the definitions in 641—Chapter 95 shall apply.
[**ARC 0483C**, IAB 12/12/12, effective 1/16/13; see Delay note at end of chapter]

641—97.2(144) Forms—property of department. All forms, certificates and reports pertaining to the registration of death events are the property of the department and shall be surrendered to the state registrar upon demand.

97.2(1) The forms supplied or approved for reporting death events shall be used for official purposes as provided for by law, rules and instructions of the state registrar.

97.2(2) No forms, except those furnished or approved by the state registrar, shall be used in the reporting of death events or the making of copies of vital records.
[**ARC 0483C**, IAB 12/12/12, effective 1/16/13; see Delay note at end of chapter]

641—97.3(144) Standard registration of death—up to one year. Iowa death records submitted for registration within one year from the date of death shall be prepared on the standard Certificate of Death form.

97.3(1) The county in which the death occurs or in which the dead human body is found is the county of death.

97.3(2) If the death occurs in a moving conveyance, the county in which the dead human body is first removed from the conveyance is the county of death.

97.3(3) A blank Certificate of Death form shall be used only by the state registrar or authorized agents.

97.3(4) If a funeral director uses a computer software program to generate death records, the certificate of death form shall be provided to the state registrar prior to the funeral director's use of the form. The state registrar shall review the form and provide written approval to the funeral director or shall deny approval of the form if the form does not conform to the standard certificate of death as prescribed. Denial shall be provided in writing.
[**ARC 0483C**, IAB 12/12/12, effective 1/16/13; see Delay note at end of chapter]

641—97.4(144) Standard registration of fetal death—up to one year. Iowa fetal death records submitted for registration within one year from the date of fetal death shall be prepared on the standard Certificate of Fetal Death form. A fetal death certificate shall not be filed after one year from the date of the event.

97.4(1) When a fetal death occurs in an institution, the person in charge of the institution or the person's designee, the physician in attendance at or after delivery, or a medical examiner may assist in preparation of the Certificate of Fetal Death form as directed by the state registrar.

97.4(2) In cases in which a fetus has reached the gestation period of 20 completed weeks or more or a weight of 350 grams or more, a Certificate of Fetal Death form shall be:

a. Registered and maintained solely at the state registrar's office; and

b. Filed within three days after delivery and prior to final disposition of the fetus.

97.4(3) The county in which the dead human fetus is found is the county of death. The certificate shall be filed within three days after the fetus is found.

97.4(4) If the fetal death occurs in a moving conveyance, the county in which the fetus is first removed from the conveyance is the county of death.

97.4(5) A blank Certificate of Fetal Death form shall be used only by the state registrar or authorized agents.

97.4(6) If a funeral director uses a computer software program to generate fetal death records, the certificate of fetal death form shall be provided to the state registrar prior to the funeral director's use of the form. The state registrar shall review the form and provide written approval to the funeral director

or shall deny approval of the form if the form does not conform to the standard certificate of death as prescribed. Denial shall be provided in writing.
[**ARC 0483C**, IAB 12/12/12, effective 1/16/13; see Delay note at end of chapter]

641—97.5(144) Preparation of the certificate of death or fetal death.

97.5(1) The funeral director or person other than the funeral director who first assumes custody of a dead human body or fetus for the purposes of disposition shall:

a. Obtain the personal data from the next of kin or the best-qualified person or source available;

b. Obtain the medical certification of cause of death from the medical certifier; and

c. Within three days after the death and prior to final disposition of the dead human body, file the completed certificate of death in the county where the death occurred or, within three days after delivery and prior to disposition of the fetus, file the completed certificate of fetal death with the state registrar.

97.5(2) The funeral director or person other than the funeral director who first assumes custody of the dead human body or fetus for the purposes of disposition shall prepare the certificate of death or fetal death on the official paper issued by the state registrar by one of the following means:

a. Use of a typewriter with dark blue or black ribbon to complete the standard certificate form;

b. Use of a funeral director's computer program to complete the form that has been preapproved by the state registrar pursuant to subrules 97.3(4) and 97.4(6);

c. Use of an electronic form prescribed by the state registrar; or

d. As directed by the state registrar.

97.5(3) Unless otherwise directed by the state registrar, a certificate of death or fetal death shall be accepted for filing and registration only when:

a. All names are typed in the spaces provided;

b. All items are completed as required;

c. No alterations or erasures are apparent;

d. All signatures are original and genuine and are in dark blue or black ink;

e. The certificate presented for registration is on the approved form and official paper prescribed by the state registrar;

f. Data are consistent with the facts of death; and

g. The form is prepared in conformity with these rules or instructions issued by the state registrar.
[**ARC 0483C**, IAB 12/12/12, effective 1/16/13; see Delay note at end of chapter]

641—97.6(144) Medical certification of death. The funeral director shall submit the completed fact of death portion of the certificate of death to the physician, physician assistant, advanced registered nurse practitioner, or medical examiner for the completion of the medical portion.

97.6(1) For a natural cause of death, the physician, physician assistant or advanced registered nurse practitioner in charge of the patient's care for the illness or condition which resulted in death shall complete and sign the medical certification within 72 hours after receipt of the death certificate from the funeral director or individual who initially assumed custody of the body.

97.6(2) If there is a non-natural cause of death, the state medical examiner or county medical examiner shall be notified and shall conduct an inquiry.

97.6(3) If the decedent was an infant or child and the cause of death is not known, a medical examiner's inquiry shall be conducted and an autopsy performed as necessary to exclude a non-natural cause of death.

97.6(4) If upon inquiry into a death, the state medical examiner or county medical examiner determines that a preexisting natural disease or condition was the likely cause of death and that the death does not affect the public interest as described in Iowa Code section 331.802(3), the state medical examiner or county medical examiner may elect to defer to the physician, physician assistant or advanced registered nurse practitioner in charge of the patient's preexisting condition the certification of the cause of death.

97.6(5) When an inquiry is required by the state medical examiner or county medical examiner, the state medical examiner or county medical examiner shall investigate the cause and manner of death and

shall complete and sign the medical certification within 72 hours after determination of the cause and manner of death.

97.6(6) The medical certifier completing the medical certification of cause of death shall attest to the accuracy of the medical certification either by signature or by an electronic process approved by the state registrar.

[**ARC 0483C**, IAB 12/12/12, effective 1/16/13; see Delay note at end of chapter]

641—97.7(144) Medical certification of fetal death.

97.7(1) The medical certification for a fetal death shall be completed by the physician in attendance at or after delivery of the fetus within 72 hours after delivery, except when an inquiry is required by a medical examiner.

97.7(2) When an inquiry by a medical examiner is required, or when a fetal death occurs without medical attendance upon the mother at or after delivery, the medical examiner shall investigate the cause of fetal death and shall complete the medical certification of the fetal death within 72 hours after taking charge of the case.

97.7(3) The physician or medical examiner completing the medical certification of fetal death shall attest to the accuracy either by signature or by an electronic process approved by the state registrar.

[**ARC 0483C**, IAB 12/12/12, effective 1/16/13; see Delay note at end of chapter]

641—97.8(144) Medical certifier.

97.8(1) Only an Iowa-licensed physician, physician assistant, advanced registered nurse practitioner, or medical examiner shall certify to the cause and manner of death.

97.8(2) If the medical certifier is unavailable, an alternate medical certifier may complete the cause and manner of death when:

a. The alternate medical certifier has access to the medical history of the case;

b. The alternate medical certifier views the deceased at the time of death or after death has occurred; and

c. The death is from natural causes.

97.8(3) In all other cases in which a medical certifier is unavailable, the medical examiner shall prepare the medical certification of cause of death.

[**ARC 0483C**, IAB 12/12/12, effective 1/16/13; see Delay note at end of chapter]

641—97.9(144) Report of autopsy findings.

97.9(1) In cases in which an autopsy is to be performed, it shall not be necessary to defer the entry of the cause of death pending a full report of microscopic or toxicological studies.

97.9(2) In any case in which the gross findings of an autopsy are inadequate to determine the cause of death, the medical certifier shall mark the cause of death as "pending investigation" on the certificate and sign the certificate. Immediately after the medical data necessary for determining the cause of death have been made known, the medical certifier shall provide to the state registrar a signed statement that identifies the decedent and the cause of death. The signed statement shall be on the medical certifier's official letterhead.

97.9(3) In any case in which the autopsy findings significantly change the medical diagnosis of cause of death, the medical certifier shall make a report of the cause of death and submit it to the state registrar as soon as the findings are available. Such report shall be a signed statement that identifies the decedent and the revised cause of death and shall be on the medical certifier's official letterhead. Such report shall amend the original certificate, and the report shall be maintained in a sealed file.

[**ARC 0483C**, IAB 12/12/12, effective 1/16/13; see Delay note at end of chapter]

641—97.10(144) Extension of time. If the medical certifier is unable to complete the medical certification of cause of death or if the funeral director is unable to obtain the personal information about the deceased within the statutory time period, the funeral director shall file the certificate of death or fetal death with all available information.

97.10(1) Such certificate of death or fetal death shall be considered appropriate authority to issue a burial-transit permit.

97.10(2) As soon as possible, the person responsible for completing the information missing from the original certificate shall report the missing information to the state registrar.
[**ARC 0483C**, IAB 12/12/12, effective 1/16/13; see Delay note at end of chapter]

641—97.11(144) Removal of a dead human body or fetus.

97.11(1) A person assuming custody of a dead human body shall:

a. Contact the attending physician, physician assistant, or advanced registered nurse practitioner and receive assurance that the death was from natural causes and that the physician, physician assistant, or advanced registered nurse practitioner will assume responsibility for certifying to the cause of death; or

b. Contact the medical examiner and receive authorization to remove the dead human body if the case is within the jurisdiction of the medical examiner.

97.11(2) A person assuming custody of a dead human fetus shall:

a. Contact the attending physician and receive assurance that the death was from natural causes and that the physician will assume responsibility for certifying to the cause of fetal death; or

b. Contact the medical examiner and receive authorization to remove the dead human fetus if the case is within the jurisdiction of the medical examiner.

97.11(3) A person other than a funeral director, medical examiner, or emergency medical service provider who assumes custody of a dead human body or fetus shall first register the certificate of death or fetal death and then secure a burial-transit permit pursuant to rule 641—97.12(144) prior to removal of the dead human body or fetus from the place of death.
[**ARC 0483C**, IAB 12/12/12, effective 1/16/13; see Delay note at end of chapter]

641—97.12(144) Burial-transit permit. If a person other than a funeral director, medical examiner, or emergency medical service assumes custody of a dead human body or fetus, the person shall secure a burial-transit permit pursuant to Iowa Code section 144.32. Pursuant to rule 645—100.4(144), an unlicensed employee of the funeral establishment shall be considered an agent of the funeral director.

97.12(1) The burial-transit permit shall be issued upon a form prescribed by the state registrar and shall state:

a. The name of the decedent;

b. The date and place of death;

c. If the death was from a communicable disease;

d. The name and location of the cemetery, crematory, or other location where final disposition of the remains is to be made;

e. The method of disposition;

f. That a certificate of death or fetal death has been filed; and

g. That permission is granted to inter, remove or otherwise dispose of the dead human body or fetus.

97.12(2) To be valid, the burial-transit permit must be issued by the county medical examiner, a funeral director, or the state registrar. The burial-transit permit shall be obtained prior to the removal of the dead human body or fetus from the place of death and shall accompany the body or fetus to the place of final disposition. The person responsible for obtaining the burial-transit permit shall provide the permit to the person in charge of the place of final disposition.

97.12(3) The person in charge of the place of final disposition shall ensure that all of the requirements of this chapter relative to the burial-transit permit have been complied with before the final disposition of the remains. Such person shall retain the burial-transit permit for a period of one year from the date of the final disposition.

97.12(4) The burial-transit permit shall not be issued prior to the presentation of the completed certificate of death or certificate of fetal death.

97.12(5) A burial-transit permit shall not be issued to a person other than a licensed funeral director if the death or fetal death was caused by a suspected or known communicable disease as defined by Iowa Code section 139A.2.

97.12(6) In cases in which a fetus has reached the gestation period of 20 completed weeks or more, or a weight of 350 grams or more, a burial-transit permit shall be obtained prior to the final disposition of the fetus.

[**ARC 0483C**, IAB 12/12/12, effective 1/16/13; see Delay note at end of chapter]

641—97.13(144) Transportation and disposition of a dead human body or fetus.

97.13(1) A dead human body or fetus shall be transported only after enclosure in a container for transfer that will control odor and prevent leakage of body fluids, unless the body or fetus has been embalmed or is being transported by a licensed funeral director, emergency medical service provider or medical examiner. The transport of a dead human body or fetus shall be in a manner that is respectful of the dead, the feelings of relatives, and the sensibilities of the community.

97.13(2) When a dead human body or fetus is transported from the state for final disposition, the burial-transit permit shall accompany the body or fetus. When a dead human body or fetus is brought into the state for final disposition, a burial-transit permit under the law of the state in which the death occurred shall accompany the body or fetus.

97.13(3) If the final disposition of a dead human body or fetus is cremation at a licensed cremation establishment, scattering of cremated remains shall be subject to the local ordinances of the political subdivision and any and all regulations of the cemetery, if applicable, in which the scattering site is located. However, such local ordinances and cemetery regulations shall not allow the scattering of cremated remains upon public property or upon private property without the property owner's consent. In the absence of an applicable local ordinance or cemetery regulation, the scattering of cremated remains shall not be allowed upon any public property or upon private property without the property owner's consent. Cremation shall be considered final disposition by the department, and no further burial-transit permit shall be required.

97.13(4) If the final disposition of a dead human body or fetus is burial, interment, or entombment, local ordinances of the political subdivision in which the final disposition site is located and any and all regulations of the cemetery, if applicable, shall apply. In the absence of an applicable local ordinance, the depth of the grave at its shallowest point shall be at least three feet from the top of the burial container.

[**ARC 0483C**, IAB 12/12/12, effective 1/16/13; see Delay note at end of chapter]

641—97.14(144) Disinterment permits.

97.14(1) Disinterment of a dead human body or fetus shall be allowed for the purpose of autopsy or reburial only, and then only if the disinterment is accomplished by a funeral director.

97.14(2) Disinterment permits shall be required for any relocation aboveground or belowground of remains from the original site of interment. Disinterment permits shall be valid for 30 days after the date the permit is signed by the state registrar. Disinterment permits are issued on a form as prescribed by the state registrar with copies to be distributed as follows:

a. One copy filed with the sexton or person in charge of the cemetery in which disinterment is to be made;

b. One copy to be used during transportation of the remains;

c. One copy filed with the sexton or person in charge of the cemetery of reburial; and

d. One copy to be returned to the state registrar by the funeral director within ten days after the date of disinterment.

97.14(3) When removed from the vault for final burial, a dead human body or fetus, properly embalmed and placed in a receiving vault, shall not be considered a disinterment.

97.14(4) The following persons who are competent adults may acquire a disinterment permit without a court order pursuant to Iowa Code sections 144.34 and 144C.5 in the following descending order:

a. A designee, or alternate designee, acting pursuant to the decedent's declaration.

b. The surviving spouse of the decedent, if not legally separated from the decedent, whose whereabouts are reasonably ascertainable.

c. A surviving child of the decedent or, if there is more than one surviving child, a majority of the surviving children whose whereabouts are reasonably ascertainable.

d. The surviving parent or parents of the decedent whose whereabouts are reasonably ascertainable.

e. A surviving grandchild of the decedent or, if there is more than one surviving grandchild, a majority of the surviving grandchildren whose whereabouts are reasonably ascertainable.

f. A surviving sibling of the decedent or, if there is more than one surviving sibling, a majority of the surviving siblings whose whereabouts are reasonably ascertainable.

g. A surviving grandparent of the decedent or, if there is more than one surviving grandparent, a majority of the surviving grandparents whose whereabouts are reasonably ascertainable.

h. A person in the next degree of kinship to the decedent in the order named by law to inherit the estate of the decedent under the rules of inheritance for intestate succession or, if there is more than one such surviving person, a majority of such surviving persons whose whereabouts are reasonably ascertainable.

i. A person who represents that the person knows the identity of the decedent and who signs an affidavit warranting the identity of the decedent and assuming the right to control final disposition of the decedent's remains and the responsibility to pay any expense attendant to such final disposition. A person who warrants the identity of the decedent pursuant to this paragraph is liable for all damages that result, directly or indirectly, from that warrant.

j. The county medical examiner, if responsible for the decedent's remains.

97.14(5) A funeral director may await a court order before proceeding with disinterment of a decedent's remains if the funeral director is aware of a dispute among:

a. Persons who are members of the same class of persons described in subrule 97.14(4); or

b. Persons who are authorized under subrule 97.14(4) and the executor named in the decedent's will or personal representative appointed by the court.

[**ARC 0483C**, IAB 12/12/12, effective 1/16/13; see Delay note at end of chapter]

641—97.15(144) Delayed death registration—one year or more after event. Iowa deaths registered one year or more after the date of death shall be prepared on a Delayed Certificate of Death form developed by the state registrar. The state registrar shall require documentary evidence to prove the facts of the death pursuant to Iowa Code section 144.16. The delayed certificate of death shall be registered and maintained solely at the state registrar's office.

97.15(1) *Application.* Registration of a delayed certificate of death may be requested by the surviving next of kin of the deceased, or the surviving next of kin's legal representative, in the following descending order:

a. Executor of the decedent's estate;

b. Spouse, if not legally separated from the decedent;

c. Child or legal guardian of the child if the child is under the age of majority;

d. Parent;

e. Grandchild or legal guardian of the grandchild if the grandchild is under the age of majority;

f. Sibling;

g. Grandparent; or

h. Funeral director responsible for the disposition of the decedent.

97.15(2) *Facts to be established.*

a. The applicant shall submit a notification of record search certified by the state registrar, which shall indicate that no prior certificate of death is on file for the person whose delayed death record is to be filed. The notification of record search shall be returned to the applicant and shall not be exchanged for a certified copy of the delayed certificate of death.

b. The applicant shall substantiate the following with documentary evidence:

(1) The full legal name and gender of the deceased at the time of the death;

(2) The date and place of birth;

(3) The date and time of death;

(4) The place of death, including the type of place and location where the death occurred;

(5) The method and location of the final disposition;

(6) The full name and address of the person responsible for the final disposition;

(7) Cause and manner of death; and

(8) The full name, address, and relationship to the decedent of the person applying to register the delayed certificate of death.

97.15(3) *Documentary evidence.*

a. The application to register the delayed certificate of death shall be supported by a minimum of the following:

(1) An affidavit of the person filing the certificate attesting to the accuracy of the information on the certificate; and

(2) Three dated documents from independent sources that consistently support the information required pursuant to subrule 97.15(2). The documents shall be in the form of the original record, a certified copy thereof, or a notarized statement from the custodian of the record or document on the custodian's letterhead. Personal affidavits are not acceptable.

b. The state registrar may require additional documentary evidence to prove the facts of the death event.

97.15(4) *Abstraction and certification by the state registrar.* The state registrar shall abstract on the Delayed Certificate of Death form a description of each document submitted to support the facts of death. This description shall include:

a. The title or description of the document;

b. The name and address of the custodian who attested to the facts on the original documents in the custodian's custody;

c. The date of the original filing of the document being abstracted; and

d. The information regarding the death for delayed registration.

97.15(5) *Acceptance of documentary evidence for registration.* All documents submitted in support of the delayed registration shall be returned to the applicant after review, abstraction, and registration. The state registrar shall by signature certify that:

a. No prior certificate of death is on file for the decedent;

b. The evidence has been reviewed and substantiates the facts of death; and

c. The abstract of the evidence appearing on the delayed certificate of death accurately reflects the nature and content of the documents.

97.15(6) *Denial of registration.* In the absence of adequate substantiating evidence or if the state registrar finds reason to question the validity or adequacy of the evidence required to establish a delayed certificate of death, the state registrar shall not register the delayed record.

a. The written notice of rejection from the state registrar shall include:

(1) The Delayed Certificate of Death form stamped "rejected"; and

(2) The Delayed Evidence Refusal form.

b. Applications for delayed certificates which have not been completed within one year from the date of application may be dismissed at the discretion of the state registrar. Upon dismissal, the state registrar shall advise the applicant, and all documents submitted in support of such registration shall be returned to the applicant.

97.15(7) *Duties of county registrar.* The county registrar may assist the applicant in the completion and notarization of the delayed form, excluding the portion restricted for state use only. The county registrar may forward the partially completed delayed form, documents and fees to the state registrar for final review and possible acceptance.

97.15(8) *Fees.* Administrative and certified copy fees shall be charged as provided in rule 641—95.6(144).

[**ARC 0483C**, IAB 12/12/12, effective 1/16/13; see Delay note at end of chapter]

641—97.16(144) Registration of presumptive death.

97.16(1) A petition shall be filed with the district court in the county where the presumptive death occurred and shall be supported with the completed Affidavit of Personal Knowledge of a Missing Person form. The form shall be completed by the surviving next of kin of the deceased, or the surviving next of kin's legal representative, in the following descending order:

a. Spouse, if not legally separated from the decedent;

b. Child or the child's legal guardian if the child is under the age of majority;

c. Parent;

d. Grandchild or the grandchild's legal guardian if the grandchild is under the age of majority;

e. Sibling;

f. Grandparent;

g. Aunt or uncle;

h. Niece or nephew; or

i. A person in the next degree of kinship to the decedent in the order named by law to inherit the estate of the decedent pursuant to Iowa Code sections 633.210 to 633.226.

97.16(2) In addition to the Affidavit of Personal Knowledge of a Missing Person form or in the absence of the next of kin, the petition may be supported by the following:

a. Affidavit by Employer for an Employee Who Was Working at Time of Disappearance form;

b. Affidavit by Government Official for a Government Employee Missing While Involved in Rescue Efforts form; or

c. Affidavit by Reliable Informant of Missing Person form.

97.16(3) The state registrar shall provide the affidavit forms and the certificate of presumptive death. The affidavits and the certificate of presumptive death shall be registered and maintained solely at the state registrar's office.

97.16(4) Upon presentation of a certified copy of a court order, the state registrar shall file a certificate of presumptive death pursuant to Iowa Code sections 633.517 to 633.520. The order from the district court shall only establish the presumptive death record.

97.16(5) In cases under the jurisdiction of the medical examiner, the certified copy of the court order and the completed supporting affidavits listed in subrules 97.16(1) and 97.16(2) shall be delivered to the medical examiner. The medical examiner shall complete the certificate of presumptive death and certify to the cause of death.

97.16(6) The certificate of presumptive death shall be registered and maintained solely at the state registrar's office.

97.16(7) The certificate of presumptive death shall be recorded based on the date of the court order and shall not be registered as a delayed certificate.

97.16(8) If the missing person is located and found to be alive, the certificate of presumptive death shall be voided and removed from the vital records system of registration. Any issued certified copies shall be surrendered to the state registrar.

[**ARC 0483C**, IAB 12/12/12, effective 1/16/13; see Delay note at end of chapter]

641—97.17(144) Release or final disposition of a dead human body or fetus by an institution.

97.17(1) When a dead human body or fetus is released by an institution, the person in charge of the institution shall maintain a record showing:

a. Name of the deceased;

b. Date, time, and place of death;

c. Name, title, and license number of person who pronounced death;

d. Name and address of the medical certifier;

e. Name and address of the person to whom the dead human body or fetus is released; and

f. Date of removal of the dead human body or fetus from the institution.

97.17(2) When a dead human body or fetus is released or final disposition is completed by an institution, the person in charge of the institution shall keep a record showing the date, place, and manner of release or final disposition.

97.17(3) At the direction of the state registrar, the institution shall provide the information listed in subrule 97.17(1) to the funeral director or person acting as such who assumes custody of the dead human body for purposes of final disposition.

97.17(4) Records maintained under this rule shall be retained for a period of not less than ten years and shall be made available for inspection by the state registrar upon demand.

[**ARC 0483C**, IAB 12/12/12, effective 1/16/13; see Delay note at end of chapter]

641—97.18(144) Additional record by funeral director.

97.18(1) In addition to filing any certificate or other form required by Iowa Code chapter 144, a funeral director or other person who removes from the place of death or transports or completes final disposition of a dead human body or fetus shall maintain a record which shall identify the following:

a. Name of the deceased;

b. Date, time, and place of death;

c. Name and address of the person to whom the dead human body or fetus is released;

d. Name of institution or other place of death releasing the dead human body or fetus;

e. Date of removal from the place of death; and

f. Place and method of final disposition of the dead human body or fetus.

97.18(2) Records maintained under this rule shall be retained for a period of not less than ten years at the funeral establishment responsible for disposition and shall be made available for inspection by the state registrar upon demand.

[**ARC 0483C**, IAB 12/12/12, effective 1/16/13; see Delay note at end of chapter]

These rules are intended to implement Iowa Code sections 135.11(7), 144.12, 144.16 to 144.18, 144.26 to 144.29, 144.30 to 144.35, 144.47, 144.49 to 144.51, 144C.5, 331.802(3) and 633.517 to 633.520.

[Filed ARC 0483C (Notice ARC 0376C, IAB 10/3/12), IAB 12/12/12, effective 1/16/13][1]

[1] January 16, 2013, effective date of Chapter 97 [ARC 0483C] delayed until the adjournment of the 2013 General Assembly by the Administrative Rules Review Committee at its meeting held January 8, 2013; delay lifted at the meeting held March 8, 2013.

CHAPTER 98
MARRIAGE REGISTRATION
[Prior to 12/12/12, see [641] Ch 96, 99.13]

641—98.1(144,595) Definitions. For the purpose of this chapter, the definitions in 641—Chapter 95 shall apply.
[**ARC 0483C**, IAB 12/12/12, effective 1/16/13; see Delay note at end of chapter]

641—98.2(144,595) Forms—property of department. All forms, certificates and reports pertaining to the registration of a marriage are the property of the department and shall be surrendered to the state registrar upon demand.

98.2(1) The forms supplied or approved for reporting a marriage shall be used for official purposes as provided for by statute, rules and instructions of the state registrar.

98.2(2) No forms, except those furnished or approved by the state registrar, shall be used in the reporting of a marriage or the making of copies of vital records.
[**ARC 0483C**, IAB 12/12/12, effective 1/16/13; see Delay note at end of chapter]

641—98.3(144,595) Standard registration of marriage—up to one year. A marriage event that takes place in Iowa shall be prepared on the standard Certificate of Marriage form and submitted for registration within one year from the date of marriage.

98.3(1) Prior to marriage, the applicants shall:

a. Obtain an Application for a License to Marry in Iowa form from the county registrar;

b. Submit to the county registrar the completed application and fee pursuant to Iowa Code section 331.605(6); and

c. Receive a license to marry in Iowa and a Certificate of Marriage form from the county registrar.

98.3(2) Once the marriage is solemnized, the completed certificate of marriage shall be filed with the county registrar where the license to marry was issued. The county registrar shall then forward the certificate of marriage to the state registrar for filing.
[**ARC 0483C**, IAB 12/12/12, effective 1/16/13; see Delay note at end of chapter]

641—98.4(144,595) Application for a license to marry in Iowa.

98.4(1) The Application for a License to Marry in Iowa form is available from any county registrar. The applicants are the parties to be married.

98.4(2) The application shall not be processed until all items on the double-sided application form, including the affidavit of a competent and disinterested person, have been completed. The affidavit shall be completed and signed in front of a notary public by an individual of legal age who is acquainted with both applicants who plan to marry. A family member may serve as the competent and disinterested person.

98.4(3) Each applicant shall verify the personal information by notarized signature.

98.4(4) If an applicant is 16 or 17 years of age, the Certificate of Consent of Underage Party to Marry form shall be completed in accordance with Iowa Code section 595.2(4) and shall be approved by a judge in the county's judicial district before the application for a marriage license may be accepted by the county registrar. Persons 15 years of age or younger may not marry in Iowa.

98.4(5) The Application for a License to Marry in Iowa form shall be signed in front of a notary public by both parties to be married and their competent and disinterested person. By signature, the applicants and their competent and disinterested person are attesting that the applicants are:

a. Eighteen years of age or older or, if either or both are 16 or 17 years of age, that they have provided a signed Certificate of Consent of Underage Party to Marry form;

b. Competent to enter into a civil contract pursuant to Iowa Code section 595.1A;

c. Not legally married to each other and that neither is legally married to someone else who is living; and

d. Acknowledging that they have provided accurate information on the application form.

98.4(6) An applicant is not required to be a U.S. citizen.

98.4(7) The application for a license to marry in Iowa shall be submitted to the registrar in the county where the application and marriage certificate are to be filed. The marriage license is valid in any county in Iowa.

98.4(8) A fee is due upon the submittal of a completed application for the license to marry pursuant to Iowa Code section 331.605(1)*"g."*

98.4(9) At the time of completion of the Application for a License to Marry in Iowa form, the applicants shall indicate the adoption of the legal name to be used after marriage pursuant to Iowa Code section 595.5(1). When the application is filed, the county registrar shall enter the legal name on the License to Marry in Iowa form and the original Certificate of Marriage form. Once the application is filed, any changes to the legal name to be adopted shall only be made prior to the marriage by reapplication and repayment of the application fee unless it can be proven that an obvious typographical error was made when the license or the certificate was prepared. An individual shall have only one legal name at any one time pursuant to Iowa Code section 595.5(2).

98.4(10) The original certificate of marriage shall not later be modified to reflect a court-ordered legal change of name.

[**ARC 0483C**, IAB 12/12/12, effective 1/16/13; see Delay note at end of chapter]

641—98.5(144,595) License to marry.

98.5(1) Upon receipt and acceptance of a completed application for a license to marry in Iowa, the county registrar may issue the license to marry. When the marriage license valid date is computed, the day of application shall be excluded. The license shall become valid after the expiration of three calendar days after the date of application to marry.

98.5(2) The three-day waiting period may be waived by a district judge in the county's judicial district pursuant to Iowa Code section 595.4. An Application for Waiver of 3-Day Waiting Period form is available from the county registrar. If the waiver is granted, the county registrar shall collect the $5 fee for the waiver pursuant to Iowa Code section 595.4.

98.5(3) When a license is issued, the county registrar shall deliver to the applicant the Certificate of Marriage form and provide instructions to ensure the return of a complete and accurate certificate of marriage for filing.

98.5(4) If the license to marry in Iowa is not retrieved from the county registrar within six months from the date of application, the application is void.

98.5(5) The license to marry is proof that proper application to marry in Iowa has been made. The parties to be married shall present the license to the person who will solemnize the marriage pursuant to Iowa Code section 595.10.

[**ARC 0483C**, IAB 12/12/12, effective 1/16/13; see Delay note at end of chapter]

641—98.6(144, 595) Certificate of marriage.

98.6(1) At the time the license to marry in Iowa is issued, the county registrar shall also prepare the original copy of the Certificate of Marriage form. The person solemnizing the marriage shall complete the blank items pertaining to the marriage ceremony and obtain the required signatures.

98.6(2) All participants in the marriage ceremony shall be present at the same time and location within the geographic boundaries of the state of Iowa, including the parties to be married, two witnesses and the officiant. Marriage ceremonies shall not occur by proxy, telephone, or other electronic means.

98.6(3) After the marriage ceremony:

a. The parties married shall sign, at a minimum, their first and last legal name on the Certificate of Marriage form as indicated on the Application for a License to Marry in Iowa form; and

b. Two witnesses present at the ceremony and the officiant shall sign and print their names on the Certificate of Marriage form in the spaces provided. If there is more than one officiant, the signature and name of only one of the officiants shall be on the Certificate of Marriage form.

98.6(4) Photocopies of the certificate of marriage are prohibited prior to registration of the certificate with the county registrar. The officiant shall not affix any kind of seal to the certificate of marriage.

98.6(5) Within 15 days after the marriage ceremony, the officiant who solemnized the marriage shall file for registration the certificate of marriage with the county registrar that issued the marriage license, except as directed pursuant to Iowa Code section 595.16.

98.6(6) Upon registration of the certificate of marriage, the application for a license to marry becomes part of the record of marriage, including the three-day waiver and consent to marriage of a minor, if applicable.

98.6(7) Original certificates of marriage registered by the county registrar shall be forwarded to the state registrar weekly or as directed by the state registrar.

[**ARC 0483C**, IAB 12/12/12, effective 1/16/13; see Delay note at end of chapter]

641—98.7(144,595) Delayed registration of marriage—one year or more after date of event. All Iowa marriages registered one year or more after the date of the marriage shall be prepared on the Delayed Certificate of Marriage form. The state registrar shall require documentary evidence to establish the facts of the marriage pursuant to Iowa Code section 144.16 and subrule 98.7(2). The delayed marriage record shall be registered and maintained solely at the state registrar's office.

98.7(1) *Application.* A completed Delayed Certificate of Marriage form shall be signed before a notary by both parties to the marriage and filed with the state registrar.

98.7(2) *Facts to be established.*

a. The applicant shall submit a notification of record search certified by the state registrar, which shall indicate that no prior certificate of marriage is on file for the persons whose delayed marriage record is to be filed. The notification of record search shall be returned to the applicant and shall not be exchanged for a certified copy of delayed certificate of marriage.

b. The applicant shall substantiate the following with documentary evidence:

(1) The county in Iowa where the license to marry was issued;

(2) The full name of the registrants before and after the marriage;

(3) The date and place of the marriage in Iowa;

(4) The full names of the registrants' parents;

(5) The full names of the two witnesses present at the marriage ceremony; and

(6) The full name and address of the officiant who performed the marriage ceremony.

98.7(3) *Documentary evidence.*

a. To be acceptable for purposes of registration by the state registrar, the delayed certificate of marriage must be supported by:

(1) All of the following:

1. A copy of the issued license to marry in Iowa or the completed application for the license to marry in Iowa secured from the county registrar in the county where the license to marry was issued;

2. A notarized affidavit from two witnesses to the wedding ceremony attesting to the facts of the marriage; and

3. A certified copy transcribed from the official records where the marriage was performed including the date and place of such marriage as attested to by the custodian of such records; or

(2) An affidavit of the person who performed the ceremony documenting that there was a marriage and the date and place of such marriage.

b. The state registrar may require additional documentary evidence to prove the facts of the marriage event.

98.7(4) *Abstraction and certification by the state registrar.* The state registrar shall abstract on the Delayed Certificate of Marriage form a description of each document submitted to support the facts of the marriage event. This abstract shall include:

a. The title, description and signatory from each document presented;

b. The date of the original filing of the document being abstracted; and

c. The facts of the marriage event as established pursuant to paragraph 98.7(2)*"b."*

98.7(5) *Acceptance of documentary evidence for registration.* All documents submitted in support of the delayed registration shall be returned to the applicant after review, abstraction, and registration. The state registrar shall by signature certify that:

a. No prior certificate of marriage is on file for the registrants;

b. The evidence has been reviewed and substantiates the facts of the marriage event; and

c. The abstract of the evidence appearing on the delayed certificate of marriage accurately reflects the nature and content of the document.

98.7(6) *Denial of registration.* In the absence of adequate substantiating evidence or if the state registrar finds reason to question the validity or adequacy of the evidence required to establish a delayed certificate of marriage, the state registrar shall not register the delayed record.

a. The written notice of rejection from the state registrar shall include:

(1) The Delayed Certificate of Marriage form stamped "rejected"; and

(2) The Delayed Evidence Refusal form.

b. Applications for delayed certificates which have not been completed within one year from the date of application may be dismissed at the discretion of the state registrar. Upon dismissal, the state registrar shall advise the applicant, and all documents submitted in support of such registration shall be returned to the applicant.

98.7(7) *Duties of county registrar.* The county registrar may assist the applicant in the completion and notarization of the delayed form, excluding the portion restricted for state use only. The county registrar may forward the partially completed delayed form, documents and fees to the state registrar for final review and possible acceptance.

98.7(8) *Fees.* Administrative and certified copy fees shall be charged as provided in rule 641—95.6(144).

[**ARC 0483C**, IAB 12/12/12, effective 1/16/13; see Delay note at end of chapter]

641—98.8(144,595) Dissolution of marriage or annulment.

98.8(1) The completed Report of Dissolution of Marriage or Annulment form shall be filed with the clerk of district court within one month from the date of the dissolution of marriage or annulment and be prepared on the official paper issued by the state registrar by one of the following means:

a. Use of a typewriter using a dark blue or black ribbon on the standard form of the report;

b. Use of a computer program that is preapproved by the state registrar;

c. Use of an electronic form prescribed by the state registrar; or

d. As directed by the state registrar.

98.8(2) If an attorney or clerk of district court uses a computer software program to generate the report of dissolution of marriage or annulment, the form shall be reviewed by the state registrar for approval. The state registrar shall deny approval if the form does not conform to the standard Report of Dissolution of Marriage or Annulment form as prescribed.

98.8(3) Clerks of district court shall submit reports of dissolution of marriage or annulment to the state registrar weekly or as directed by the state registrar.

[**ARC 0483C**, IAB 12/12/12, effective 1/16/13; see Delay note at end of chapter]

These rules are intended to implement Iowa Code sections 144.12, 144.16, 331.605(1)*"f"* and *"g,"* 595.2(4), 595.4, 595.5, 595.10, and 595.16.

[Filed ARC 0483C (Notice ARC 0376C, IAB 10/3/12), IAB 12/12/12, effective 1/16/13][1]

[1] January 16, 2013, effective date of the rescission of Chapter 98 and the adoption of new Chapter 98 [ARC 0483C] delayed until adjournment of the 2013 General Assembly by the Administrative Rules Review Committee at its meeting held January 8, 2013; delay lifted at the meeting held March 8, 2013.

CHAPTER 99
VITAL RECORDS MODIFICATIONS

[Prior to 12/12/12, see [641] Chs 100, 102]

641—99.1(144) Definitions. For the purpose of this chapter, the definitions in 641—Chapter 95 shall apply.
[**ARC 0483C**, IAB 12/12/12, effective 1/16/13; see Delay note at end of chapter]

641—99.2(144) Forms—property of department. All forms, certificates and reports pertaining to the registration of vital events are the property of the department and shall be surrendered to the state registrar upon demand.

99.2(1) The forms supplied or approved for reporting vital events shall be used for official purposes as provided for by law, rules and instructions of the state registrar.

99.2(2) No forms, except those furnished or approved by the state registrar, shall be used in the reporting or modification of vital events or the making of copies of vital records.
[**ARC 0483C**, IAB 12/12/12, effective 1/16/13; see Delay note at end of chapter]

641—99.3(144) Forms used in the establishment of new records. The standard certificate form for reporting of live birth, death, fetal death, or marriage in use at the time of the event shall be used to prepare a new certificate.
[**ARC 0483C**, IAB 12/12/12, effective 1/16/13; see Delay note at end of chapter]

641—99.4(144) Corrections of minor error in vital record—within one year of event.

99.4(1) Corrections of minor errors may be made by the state registrar within one year and prior to the first anniversary of the date of the event upon observation, upon request of the data provider, upon query, or upon request from an entitled person. Minor errors include obvious errors, omissions, or transpositions of letters in words of common knowledge.

99.4(2) For a certificate of live birth, entitled persons include in the following descending order of priority:

a. Either parent as shown on the child's certificate of live birth; or

b. The legal guardian or agency having legal custody of the child.

99.4(3) For a certificate of death or fetal death other than the medical certification, entitled persons include in the following descending order of priority:

a. The surviving spouse as shown on the certificate of death;

b. A parent as shown on the certificate of death or fetal death;

c. The informant as shown on the certificate; or

d. The data provider in the case of a data entry error.

99.4(4) For a certificate of marriage, entitled persons include:

a. The county registrar that issued the license to marry; or

b. Either of the parties married.

99.4(5) Entitled persons requesting a correction shall submit to the state registrar:

a. A notarized statement and a legible copy of current government-issued photo identification or other identification documents acceptable to the state registrar; and

b. Supporting evidence if requested by the state registrar.

(1) The state registrar shall determine a priority of best evidence and may, at the state registrar's discretion, require additional documentary evidence to support the requested correction.

(2) The state registrar shall evaluate the evidence submitted in support of any correction, and when there is reason to question the validity or adequacy of the evidence, the state registrar may reject the request for correction and shall advise the applicant of the reasons for this action.

99.4(6) Only the state registrar shall make corrections on a vital record. The source of information and the date of correction shall be documented on the record but shall not appear on the certified copy.

99.4(7) There are no administrative fees required to correct a certificate pursuant to this rule.

99.4(8) Certificates corrected pursuant to this rule shall not be marked "amended."

99.4(9) Any certified copies of the incorrect certificate shall be surrendered to the state registrar for replacement at no cost pursuant to 641—subrule 95.6(3). Additional certified copies of the corrected certificate may be obtained upon receipt of a notarized application, legible copy of a current government-issued photo identification or other identification documents acceptable to the state registrar and payment of the fee pursuant to 641—paragraph 95.6(1)*"a."*

99.4(10) The corrected certificate shall be on file at the county registrar's office pursuant to rule 641—95.7(144).

[**ARC 0483C**, IAB 12/12/12, effective 1/16/13; see Delay note at end of chapter; **ARC 1075C**, IAB 10/2/13, effective 11/6/13]

641—99.5(144) Amendment of certificate of live birth to add first or middle given name—within one year of event.

99.5(1) The first or middle given name for a child whose birth was reported without a first or middle given name may be amended to add the first or middle given name within one year and prior to the first anniversary of the date of the live birth based upon a completed and notarized Affidavit to Add Child's Given Name form as provided by the department pursuant to Iowa Code section 144.38. The affidavit shall be submitted to the state registrar by entitled persons in the following descending order of priority:

a. The single parent or both parents as shown on the child's certificate of live birth;

b. The mother, in the case of the death or incapacity of the second parent;

c. The second parent if listed on the birth certificate, in the case of the death or incapacity of the mother; or

d. The legal guardian or agency having legal custody of the child.

99.5(2) A first or middle given name may be added to the certificate of live birth once in this manner. Thereafter, a first or middle given name shall be changed only upon submission of a court order for a legal change of name from a court of competent jurisdiction pursuant to Iowa Code chapter 674.

99.5(3) An administrative fee shall be charged and remitted pursuant to 641—paragraph 95.6(1)*"b."*

99.5(4) The original certificate shall be marked "amended" and shall be endorsed on the certified copy. The date of amendment and a summary description of the evidence submitted in support of the amendment shall be made a part of the record.

99.5(5) The certificate shall be on file at the county registrar's office pursuant to rule 641—95.7(144).

99.5(6) Any certified copies of the incorrect certificate shall be surrendered for replacement at no cost. Additional certified copies of the amended certificate may be obtained upon the state registrar's receipt of a notarized application, legible copy of a current government-issued photo identification or other identification documents acceptable to the state registrar, and payment of the fee pursuant to rule 641—95.6(144).

[**ARC 0483C**, IAB 12/12/12, effective 1/16/13; see Delay note at end of chapter; **ARC 1075C**, IAB 10/2/13, effective 11/6/13]

641—99.6(144) Amendment of vital record—one year or more after the event.

99.6(1) Amendments of vital records may be made by the state registrar one year or more after the date of the event upon request from an entitled person. Amendments include the correction of obvious errors, omissions, or transposition of letters in words of common knowledge.

99.6(2) For a certificate of live birth, entitled persons include in the following descending order of priority:

a. Either parent as shown on the child's certificate of live birth;

b. The mother, in the case of the death or incapacity of the second parent;

c. The second parent if listed on the birth certificate, in the case of the death or incapacity of the mother; or

d. The legal guardian or agency having legal custody of the child.

99.6(3) For a certificate of death or fetal death other than the medical certification, entitled persons include:

a. The surviving spouse as shown on the certificate of death;

b. A parent as shown on the certificate of death or fetal death; or

c. The informant as shown on the certificate of death or fetal death.

99.6(4) Amendment of a medical certification of cause of death or fetal death shall be requested solely by the medical certifier listed on the certificate of death or fetal death.

99.6(5) For a certificate of marriage, entitled persons include either of the parties married.

99.6(6) Entitled persons requesting an amendment shall submit the following to the state registrar:

a. A completed and notarized amendment request on the applicable form as follows:

(1) Amendment to Certificate of Live Birth form.

(2) Amendment to Certificate of Death or Fetal Death form.

(3) Amendment to Certificate of Marriage form;

b. A legible copy of a current government-issued photo identification or other identification documents acceptable to the state registrar;

c. Certified copies of one or more pieces of documentary evidence supporting the amendment; and

d. The required fees pursuant to rule 641—95.6(144).

99.6(7) The documentary evidence shall have been established at least five years prior to the date of the application or within seven years of the date of the event.

a. The state registrar shall determine a priority of best evidence and may, at the state registrar's discretion, require additional documentary evidence to support the requested amendment.

b. The state registrar shall evaluate the evidence submitted in support of any amendment, and when there is reason to question the validity or adequacy of the evidence, the state registrar may reject the amendment and shall advise the applicant of the reasons for this action.

99.6(8) An administrative fee shall be charged and remitted pursuant to rule 641—95.6(144).

99.6(9) The original certificate shall be clearly marked "amended" and the date of the amendment shall be endorsed on the certified copy. A summary description of the evidence submitted in support of the amendment shall be made a part of the record.

99.6(10) The amended certificate shall be on file at the county registrar's office pursuant to rule 641—95.7(144).

99.6(11) Any certified copies of the incorrect certificate shall be surrendered for replacement at no cost. Additional certified copies of the amended certificate may be obtained upon the state registrar's receipt of a notarized application, legible copy of a current government-issued photo identification or other identification documents acceptable to the state registrar and payment of the fee pursuant to rule 641—95.6(144).

[**ARC 0483C**, IAB 12/12/12, effective 1/16/13; see Delay note at end of chapter; **ARC 1075C**, IAB 10/2/13, effective 11/6/13]

641—99.7(144) Method of amendment of vital records.

99.7(1) Records not on the electronic vital records system shall be amended by drawing a single line through the incorrect item and inserting the correct or missing data immediately above or to the side of the item or by completing a blank item. In all cases in which a line must be drawn through an original entry, the line must not obliterate the original entry. The following shall be endorsed on or made a part of the record:

a. The word "amended" and the date of the amendment action; and

b. A summary of the evidence submitted in support of the amendment.

99.7(2) Records on the electronic vital records system shall be amended by correction of the incorrect item. The following shall be endorsed on or made a part of the record:

a. The word "amended" and the date of the amendment action;

b. A statement identifying the amendment; and

c. A summary of the evidence submitted in support of the amendment.

[**ARC 0483C**, IAB 12/12/12, effective 1/16/13; see Delay note at end of chapter]

641—99.8(144) Correction or amendment of same item more than once. After a correction or an amendment is made on a vital record, that entry shall not be corrected again unless:

99.8(1) It can be proven that an error was made in processing the first correction or amendment; or

99.8(2) A court order is received from a court of competent jurisdiction to correct or amend the item. If a court order for a correction or an amendment is received, an administrative fee shall be charged and remitted pursuant to rule 641—95.6(144).
[**ARC 0483C**, IAB 12/12/12, effective 1/16/13; see Delay note at end of chapter]

641—99.9(144) Other amendments to certificate of live birth.

99.9(1) The parent's name or both parents' names as reported by the parent or parents on the birth worksheet used to establish the certificate of live birth shall not be corrected or amended except by an order from a court of competent jurisdiction.

99.9(2) Certificates of live birth of deceased persons shall not be amended.
[**ARC 0483C**, IAB 12/12/12, effective 1/16/13; see Delay note at end of chapter]

641—99.10(144) Correction or amendment to medical certification of cause of death.

99.10(1) Corrections or amendments to the medical certification of cause of death shall be requested solely by the medical certifier listed on the certificate of death or fetal death.

99.10(2) The medical certifier may correct the medical certification of cause of death within 90 days following the date of death or fetal death. The request shall be submitted on official letterhead signed and dated by the medical certifier listed on the certificate of death or fetal death.

99.10(3) Any amendment after 90 days following the date of death or fetal death shall be made by order of a court of competent jurisdiction. However, the medical certification of cause of death may be amended at any time upon submission of a report of autopsy or toxicological findings or additional findings by the county or state medical examiner.

99.10(4) No fee shall be charged for correction or amendment made pursuant to this rule.
[**ARC 0483C**, IAB 12/12/12, effective 1/16/13; see Delay note at end of chapter]

641—99.11(144) Correction or amendment to a certificate of marriage.

99.11(1) The request to correct a certificate of marriage during the first year may be made by the county registrar that issued the license to marry. The written request shall be submitted to the state registrar with supporting evidence.

99.11(2) The request to correct or amend a certificate of marriage may be made by either of the parties married. The written request shall be submitted to the state registrar with supporting evidence.

99.11(3) The correction or amendment process shall not be used to change a legal name after marriage.
[**ARC 0483C**, IAB 12/12/12, effective 1/16/13; see Delay note at end of chapter]

641—99.12(144) Correction to a report of dissolution of marriage or annulment.

99.12(1) A written notice to correct a report of dissolution of marriage or annulment may be submitted to the state registrar by the clerk of district court maintaining the record from which the original report was prepared. The notice shall state in what manner the report shall be corrected.

99.12(2) Those items appearing on the Report of Dissolution of Marriage or Annulment form that are not a part of the divorce decree may be corrected either by query or upon application of either party to the dissolution of marriage or annulment or the legal representative.

99.12(3) Corrections to the report of dissolution of marriage or annulment shall be accepted only within the first year from the date of dissolution of marriage or annulment.
[**ARC 0483C**, IAB 12/12/12, effective 1/16/13; see Delay note at end of chapter]

641—99.13(144) Minimum information required to establish a new certificate of live birth.

99.13(1) A request to establish a new certificate of live birth shall be submitted to the state registrar and include at a minimum the following information:

a. The full name of the child as stated on the original certificate of live birth;

b. The full name of the child to be listed on the new certificate of live birth;

c. The date and place of birth as stated on the original certificate of live birth;

d. The full name of the parent or parents as listed on the original certificate of live birth; and

e. The full name, place of birth, date of birth, and complete residential address of the parent or parents to be listed on the new certificate of live birth.

99.13(2) The new certificate of live birth shall contain the same state file number and registration file date as were assigned to the original certificate of live birth.

[**ARC 0483C**, IAB 12/12/12, effective 1/16/13; see Delay note at end of chapter]

641—99.14(144) Establishment of new certificate of live birth following adoption.

99.14(1) Upon receipt of a completed Certificate of Adoption Report form or a certified copy of the decree of adoption from a court of competent jurisdiction and the information required pursuant to rule 641—99.13(144), the state registrar shall establish a new certificate of live birth for a person who was born in Iowa and has been adopted.

99.14(2) The new certificate of live birth shall not be marked "amended."

99.14(3) When a new certificate of live birth is established, the actual date and place of birth shall be shown on the certificate.

99.14(4) The county registrar and state registrar shall seal the original certificate of live birth. The state registrar shall place the original certificate of live birth and all related adoption information in a sealed file, and the file shall not be opened and inspected except by the state registrar for administrative purposes or upon an order from a court of competent jurisdiction pursuant to Iowa Code section 144.24.

99.14(5) The new certificate of live birth after adoption shall not be on file at the county registrar's office.

99.14(6) The state registrar shall reveal the date of the adoption and the name and address of the court that issued the adoption decree upon the receipt of a completed, notarized Revelation of County of Adoption form from an adult adopted person, a biological parent, an adoptive parent, or the legal representative of the adult adopted person, the biological parent, or the adoptive parent pursuant to Iowa Code section 144.24.

99.14(7) Administrative and certified copy fees shall be charged and remitted pursuant to rule 641—95.6(144).

[**ARC 0483C**, IAB 12/12/12, effective 1/16/13; see Delay note at end of chapter]

641—99.15(144) Establishment of new certificate of live birth following a birth by gestational surrogate arrangement.

99.15(1) All live births shall be considered the product of the woman who delivered the live infant and shall be filed in the standard manner, with that woman named as the birth mother on the original record submitted for registration.

99.15(2) For the purpose of filing for registration the record of a live birth by a gestational surrogate, the institution's or non-institution's person responsible for filing the certificate of live birth shall:

a. Notify the state registrar of the birth of a child pursuant to a gestational surrogate arrangement;

b. Follow directives for completion of the official birth worksheet;

c. Submit the birth record for registration based on the birth mother's information; and

d. Notify the state registrar when the birth record has been submitted for registration.

99.15(3) In addition, the institution's or non-institution's person responsible for filing the record for registration shall:

a. Provide the prenatal and medical data on the medical portion of the birth worksheet pertinent to the pregnancy and the birth mother's prenatal care;

b. Waive all birth registration and copy fees as collected on behalf of the state registrar;

c. Indicate on the registration that the birth mother does not have custody of the infant;

d. Assist in advising the intended parents of the procedures required to file the original birth record for registration and to reestablish the record to reflect the intended parents' information; and

e. Advise the birth mother to complete the mother's portion of the birth worksheet and to mark "no" for the social security card for the child.

99.15(4) Two intended parents—both intended parents are biological parents to the child. If the intended mother is the egg donor and the intended father is the sperm donor to the child being carried by the gestational surrogate:

a. After the birth of the child, the intended parents shall petition a court of competent jurisdiction to establish legal paternity and maternity of the child.

b. The court shall enter an order requiring the state registrar to reestablish the certificate of live birth naming the intended mother and father as the legal mother and father and requiring the state registrar to seal the original birth certificate and all related documentation.

c. The court order shall:

(1) Identify the child's full name as stated on the original certificate of live birth;

(2) State the child's date of birth and place of birth;

(3) Identify the full names of the birth mother and her legal spouse, if married;

(4) Disestablish the birth mother and her legal spouse, if married, as the legal parents of the child; and

(5) Identify the intended parents' full names prior to any marriage, full current legal names, dates of birth, birthplaces, social security numbers, and full current residential address including county.

d. The intended parents or their legal representative shall:

(1) Submit a certified copy of the court order to the state registrar;

(2) Remit administrative and certified copy fees pursuant to rule 641—95.6(144); and

(3) Include a notarized written request with mailing instructions for the certified copy of the certificate of live birth.

99.15(5) Two intended parents—intended mother is biological mother to the child; her legal spouse is not a biological parent. If the intended mother is the egg donor but her legal spouse is not the sperm donor, the intended mother shall petition a court of competent jurisdiction after the birth of the child to establish legal maternity.

a. The court shall enter an order requiring the state registrar to reestablish the certificate of live birth naming the intended mother as the legal mother and shall require the state registrar to seal the original certificate of live birth and all related documents.

b. The court order establishing legal maternity shall:

(1) Identify the child's full name as stated on the original certificate of live birth;

(2) State the child's date of birth and place of birth;

(3) Identify the full names of the birth mother and her legal spouse, if married;

(4) Disestablish the birth mother and her legal spouse, if married, as the legal parents of the child; and

(5) Identify the intended mother's full name prior to any marriage, full current name, date of birth, birthplace, social security number, and full current residential address including county.

c. The intended mother or her legal representative shall:

(1) Submit a certified copy of the court order to the state registrar;

(2) Remit administrative and certified copy fees pursuant to rule 641—95.6(144); and

(3) Include a notarized written request with mailing instructions for the certified copy of the certificate of live birth.

99.15(6) Two intended parents—intended father is biological father to the child; his legal spouse is not a biological parent.

a. If the surrogate birth mother is unmarried and the intended father is the sperm donor, the unmarried surrogate birth mother and the intended father may complete a Voluntary Paternity Affidavit form after the child's birth to place the intended father's name and information on the certificate of live birth.

b. If the surrogate birth mother is married and the intended father is the sperm donor, the married surrogate birth mother and the intended father shall by court order disestablish the surrogate birth mother's legal spouse as the legal parent and may complete a Voluntary Paternity Affidavit form pursuant to Iowa Code section 144.13.

c. The court order that disestablishes the married surrogate birth mother's legal spouse and the completed Voluntary Paternity Affidavit form shall be submitted to the state registrar.

d. If a certified copy of the certificate of live birth is requested, a notarized written request shall also be submitted to the state registrar with the certified copy fee and mailing instructions.

e. There is no administrative fee to process the completed Voluntary Paternity Affidavit form.

f. Adoption laws shall be followed to reestablish the certificate of live birth by establishing the nonbiological parent on the certificate of live birth pursuant to Iowa Code chapter 600.

99.15(7) Two intended parents—neither biological parent to the child. If the intended parents are neither the egg donor nor sperm donor, adoption laws shall be followed to reestablish the certificate of live birth by disestablishing the birth mother and her legal spouse, if any, and establishing the nonbiological parents on the certificate of live birth pursuant to Iowa Code chapter 600.

99.15(8) One female intended parent—biological mother to the child. If the intended mother is the egg donor to the child being carried by the gestational surrogate:

a. After the birth of the child, the intended mother shall petition a court of competent jurisdiction to establish legal maternity of the child.

b. The court shall enter an order requiring the state registrar to reestablish the certificate of live birth naming the intended mother as the legal mother and requiring the state registrar to seal the original certificate of live birth and all related documentation.

c. The court order shall:

(1) Identify the child's full name as stated on the original certificate of live birth;

(2) State the child's date of birth and place of birth;

(3) Identify the full names of the birth mother and her legal spouse, if married;

(4) Disestablish the birth mother and her legal spouse, if married, as the legal parents of the child; and

(5) Identify the intended parent's full name prior to any marriage, full current legal name, date of birth, birthplace, social security number, and full current residential address including county.

d. The intended parent or her legal representative shall:

(1) Submit a certified copy of the court order to the state registrar;

(2) Remit administrative and certified copy fees pursuant to rule 641—95.6(144); and

(3) Include a notarized written request with mailing instructions for the certified copy of the certificate of live birth.

99.15(9) One male intended parent—biological father to the child.

a. If the surrogate birth mother is unmarried and the intended father is the sperm donor, the unmarried surrogate birth mother and the intended father may complete a Voluntary Paternity Affidavit form after the child's birth to place the intended father's name and information on the certificate of live birth.

b. If the surrogate birth mother is married and the intended father is the sperm donor, the married surrogate birth mother and the intended father shall by court order disestablish the surrogate birth mother's legal spouse as the legal parent and may complete a Voluntary Paternity Affidavit form pursuant to Iowa Code section 144.13.

c. The court order that disestablishes the married surrogate birth mother's legal spouse and the completed Voluntary Paternity Affidavit form shall be submitted to the state registrar.

d. If a certified copy of the certificate of live birth is requested, a notarized written request shall also be submitted to the state registrar with the certified copy fee and mailing instructions.

e. There is no administrative fee to process the completed Voluntary Paternity Affidavit form.

f. If the intended father has been established as the legal father pursuant to paragraph 99.15(9)*"a"* or *"b"* and the surrogate birth mother and the intended father wish to remove the surrogate birth mother as the legal mother from the certificate of live birth, the parties shall seek a court order. The court order disestablishing legal maternity shall:

(1) Identify the child's full name as stated on the original certificate of live birth;

(2) State the child's date of birth and place of birth;

(3) Identify the full name of the birth mother; and

(4) Disestablish the birth mother as the legal parent of the child.

g. The intended parent or his legal representative shall:

(1) Submit a certified copy of the court order to the state registrar;

(2) Remit administrative and certified copy fees pursuant to rule 641—95.6(144); and

(3) Include a notarized written request with mailing instructions for the certified copy of the certificate of live birth.

99.15(10) One intended parent—not biological parent to the child. If the intended parent is neither the egg donor nor sperm donor, adoption laws shall be followed to reestablish the certificate of live birth by disestablishing the birth mother and her legal spouse, if any, and establishing the nonbiological parent on the certificate of live birth pursuant to Iowa Code chapter 600.

99.15(11) The state registrar shall seal the original certificate of live birth. The state registrar shall place the original certificate of live birth and all related documents in a sealed file, and the file shall not be opened and inspected except by the state registrar for administrative purposes or upon an order from a court of competent jurisdiction pursuant to Iowa Code section 144.24.

99.15(12) The new certificate of live birth shall not be marked "amended."

99.15(13) The new certificate of live birth shall not be on file at the county registrar's office pursuant to rule 641—95.7(144).

99.15(14) A certified copy fee and an administrative fee to replace a parent's information on a certificate of live birth shall be charged and remitted pursuant to rule 641—95.6(144).

[**ARC 0483C**, IAB 12/12/12, effective 1/16/13; see Delay note at end of chapter; **ARC 1075C**, IAB 10/2/13, effective 11/6/13]

641—99.16(144) Certificate of live birth following voluntary paternity affidavit.

99.16(1) If the birth mother was legally married at the time of conception or birth or at any time during the period between conception and birth, the name of her spouse shall be entered on the certificate of live birth as a parent pursuant to Iowa Code section 144.13.

99.16(2) If the birth mother was not legally married at the time of conception or birth or at any time during the period between conception and birth, the birth mother and the alleged biological father may:

a. Complete a Voluntary Paternity Affidavit form after the birth of the child; and

b. Submit the completed form to the state registrar.

99.16(3) If the birth mother was legally married at the time of conception or birth or at any time during the period between conception and birth, and her legal spouse is not the biological father, the birth mother and the alleged biological father may:

a. Complete a Voluntary Paternity Affidavit form after the birth of the child;

b. Obtain a court order that disestablishes her legal spouse as a parent; and

c. Submit the completed form and a certified copy of the court order to the state registrar.

99.16(4) If the birth mother and the biological father of an Iowa-born child subsequently marry each other after a voluntary affidavit of paternity has been processed, the parents may submit a second completed Voluntary Paternity Affidavit form with a certified copy of the parents' certificate of marriage to establish a new certificate changing the child's last name to that of the father.

99.16(5) If another man is shown as the father on the original certificate of live birth, a new certificate of live birth may be established only when a determination of paternity is made by a court of competent jurisdiction.

99.16(6) There is no age limitation and no fee for filing a completed Voluntary Paternity Affidavit form.

99.16(7) The county registrar and the state registrar shall seal the original certificate of live birth. The state registrar shall place the original certificate of live birth and all related documents in a sealed file, and the file shall not be opened and inspected except by the state registrar for administrative purposes or upon an order from a court of competent jurisdiction pursuant to Iowa Code section 144.24.

99.16(8) A copy of the completed and processed Voluntary Paternity Affidavit form may be acquired by either parent or either parent's legal representative upon notarized application and payment of the fee pursuant to rule 641—95.6(144). The notarized application shall include at a minimum the following items:

a. The child's full name;

b. The child's date and place of birth;

c. The mother's full name prior to any marriage; and

d. The full name and mailing address of the applicant.

99.16(9) The new certificate of live birth shall not be marked "amended."

99.16(10) The new certificate of live birth shall be on file at the county registrar's office pursuant to rule 641—95.7(144).

99.16(11) The birth mother and the biological father shall surrender any incorrect certified copies of the child's certificate of live birth for replacement at no cost. Additional certified copies of the new certificate of live birth shall be acquired upon receipt of a notarized application, legible copy of a current government-issued photo identification or other identification documents acceptable to the state registrar and payment of the fee pursuant to rule 641—95.6(144).

[**ARC 0483C**, IAB 12/12/12, effective 1/16/13; see Delay note at end of chapter; **ARC 1075C**, IAB 10/2/13, effective 11/6/13]

641—99.17(144) Certificate of live birth following court determination of paternity.

99.17(1) If the birth mother was married at the time of conception or birth or at any time during the period between conception and birth, the name of her spouse shall be entered on the certificate of live birth as a parent unless paternity has been determined otherwise by a court of competent jurisdiction pursuant to Iowa Code section 144.13.

99.17(2) Upon receipt of a certified copy of the court determination of paternity order from a court of competent jurisdiction or the completed Abstract From Court Determination of Paternity form, the state registrar shall establish a new certificate of live birth to be filed in place of the original certificate of live birth.

99.17(3) The new certificate of live birth shall list the name of the child as stated in the court determination of paternity order.

99.17(4) The state child support recovery unit may not change the child's name.

99.17(5) After a court determination of paternity has been completed, the parents as listed on the court order may submit a completed Voluntary Paternity Affidavit form to change the child's last name to that of the established father.

99.17(6) The county registrar and the state registrar shall seal the original certificate of live birth. The state registrar shall place the original certificate of live birth and all related documents in a sealed file, and the file shall not be opened and inspected except by the state registrar for administrative purposes or upon an order from a court of competent jurisdiction pursuant to Iowa Code section 144.24.

99.17(7) The new certificate of live birth shall not be marked "amended."

99.17(8) The new certificate of live birth shall be on file at the county registrar's office pursuant to rule 641—95.7(144).

99.17(9) There are no administrative fees required to establish a new certificate of live birth following a court determination of paternity.

99.17(10) Any incorrect certified copy of the child's certificate of live birth shall be surrendered for replacement at no cost. Additional certified copies of the new certificate of live birth shall be acquired upon receipt of a notarized application, legible copy of a current government-issued photo identification or other identification documents acceptable to the state registrar and payment of the fee pursuant to rule 641—95.6(144).

[**ARC 0483C**, IAB 12/12/12, effective 1/16/13; see Delay note at end of chapter; **ARC 1075C**, IAB 10/2/13, effective 11/6/13]

641—99.18(144) Certificate of live birth following recision of paternity affidavit or disestablishment of paternity.

99.18(1) An application to rescind a voluntary paternity affidavit shall be made on the Recision of Paternity Affidavit form by either the birth mother or the putative father who originally completed and signed the Voluntary Paternity Affidavit form pursuant to Iowa Code section 252A.3A.

a. The completed Recision of Paternity Affidavit form shall be notarized and received by the state registrar within the earlier of either 60 days from the latest notarized parental signature on the original Voluntary Paternity Affidavit form or entry of a court order regarding the child by the Iowa child support recovery unit pursuant to Iowa Code section 252A.3A.

b. Acceptance of the completed Recision of Paternity Affidavit form shall remove the alleged biological father's information from the certificate of live birth and rescind the voluntary paternity affidavit.

c. The child's last name shall revert to the last name as it was listed on the certificate of live birth prior to the voluntary paternity affidavit.

d. The state registrar shall send a written notice of the recision to the last-known address of the signatory of the voluntary paternity affidavit who did not sign the Recision of Paternity Affidavit form.

e. After the completed Recision of Paternity Affidavit form has been accepted and processed, the state registrar shall not accept any subsequent Voluntary Paternity Affidavit forms signed by the same mother and putative father relating to the same child pursuant to Iowa Code section 252A.3A.

99.18(2) Upon receipt of a court-ordered disestablishment of paternity, the father's information shall be removed from the certificate of live birth. The child's last name shall revert to the last name as it was listed on the certificate of live birth prior to the establishment of paternity.

99.18(3) An administrative fee shall be charged and remitted pursuant to rule 641—95.6(144).

99.18(4) The county registrar and the state registrar shall seal the original certificate of live birth. The state registrar shall place the recision of paternity information in the same sealed file as the original certificate of live birth and all previous related documents. The file shall not be opened and inspected except by the state registrar for administrative purposes or upon an order from a court of competent jurisdiction pursuant to Iowa Code section 144.24.

99.18(5) The new certificate of live birth shall not be marked "amended."

99.18(6) The new certificate of live birth shall be on file at the county registrar's office pursuant to rule 641—95.7(144).

99.18(7) Any incorrect certified copies of the child's certificate of live birth shall be surrendered for replacement at no cost. Additional certified copies of the new certificate of live birth shall be acquired upon receipt of a notarized application, legible copy of a current government-issued photo identification or other identification documents acceptable to the state registrar and payment of the fee pursuant to rule 641—95.6(144).

[**ARC 0483C**, IAB 12/12/12, effective 1/16/13; see Delay note at end of chapter]

641—99.19(144) Certificate of live birth following court-ordered change of name.

99.19(1) For a court-ordered name change, a certified copy of an order from a court of competent jurisdiction pursuant to Iowa Code chapter 674 or an Abstract to Change Registrant's Legal Name form completed by the clerk of district court changing the name shall be submitted to the state registrar.

99.19(2) Only the person named on the record, parent or parents if the registrant is a minor child, legal guardian, or legal representative may request a court-ordered change of name.

99.19(3) The court order or abstract shall contain:

a. The registrant's full name as it appears on the original certificate of live birth;

b. The registrant's date and place of birth;

c. The mother's full maiden name and father's full name as it appears on the original certificate of live birth;

d. The registrant's full new name; and

e. The certification of the clerk of district court.

99.19(4) The certified copy of a certificate of live birth after a legal change of name shall be clearly marked "legal change of name" and note the following:

a. The registrant's full name as shown on the original certificate;

b. Any previous legal name changes;

c. The registrant's full new name according to the court order;

d. The date the legal change of name order was granted; and

e. The name of the court that ordered the name change pursuant to Iowa Code chapter 674.

99.19(5) A parent cannot be added to the certificate of live birth with a court-ordered change of name.

99.19(6) The county registrar and the state registrar shall seal the original certificate of live birth. The state registrar shall place the original certificate of live birth and all related documents in a sealed file, and the file shall not be opened and inspected except by the state registrar for administrative purposes or upon an order from a court of competent jurisdiction pursuant to Iowa Code section 144.24.

99.19(7) After the court-ordered change of name, the certificate of live birth shall not be on file at the county registrar's office pursuant to rule 641—95.7(144).

99.19(8) An administrative fee shall be charged and remitted pursuant to rule 641—95.6(144).

99.19(9) Any incorrect certified copies of the certificate shall be surrendered for replacement at no cost. Additional certified copies of the new certificate shall be acquired upon receipt of a notarized application, legible copy of a current government-issued photo identification or other identification documents acceptable to the state registrar and payment of the fee pursuant to rule 641—95.6(144).
[**ARC 0483C**, IAB 12/12/12, effective 1/16/13; see Delay note at end of chapter]

641—99.20(144) Certificate of live birth following sex designation change.

99.20(1) After surgery or other treatment to change a sex designation, the registrant shall submit to the state registrar a notarized affidavit from the physician and surgeon, or osteopathic physician and surgeon, completing the sex designation treatment stating the following:

a. The sex designation has been permanently changed by surgery or other treatment;

b. Description of the medical procedures; and

c. The physician and surgeon or osteopathic physician and surgeon's full name, address, state of medical license, and medical license number.

99.20(2) The medical affidavit shall be accompanied by a completed and notarized Amendment to Certificate of Live Birth form.

99.20(3) If the registrant's name is to be changed on the certificate of live birth, the registrant shall submit to the state registrar a certified copy of the court-ordered change of name.

99.20(4) Pursuant to Iowa Code section 144.23, the state registrar may make further investigation or require further information necessary to determine whether a sex change has occurred.

99.20(5) The county registrar and the state registrar shall seal the original certificate of live birth. The state registrar shall place the original certificate of live birth and all related documents in a sealed file, and the file shall not be opened and inspected except by the state registrar for administrative purposes or upon an order from a court of competent jurisdiction pursuant to Iowa Code section 144.24.

99.20(6) The certificate of live birth after the sex designation change shall not be on file at the county registrar's office pursuant to rule 641—95.7(144).

99.20(7) The new certificate of live birth shall not be marked "amended."

99.20(8) Administrative fees shall be charged and remitted pursuant to rule 641—95.6(144).

99.20(9) Any incorrect certified copies of the certificate shall be surrendered for replacement at no cost. Additional certified copies of the new certificate shall be acquired upon receipt of a notarized application, legible copy of a current government-issued photo identification or other identification documents acceptable to the state registrar and payment of the fee pursuant to rule 641—95.6(144).
[**ARC 0483C**, IAB 12/12/12, effective 1/16/13; see Delay note at end of chapter]

These rules are intended to implement Iowa Code sections 144.19 to 144.21, 144.23, 144.24, 144.25A, 144.38 to 144.41, 252A.3A, 600.15, 600.16A, 674.2, 674.7 and 674.9.

[Filed ARC 0483C (Notice ARC 0376C, IAB 10/3/12), IAB 12/12/12, effective 1/16/13][1]

[Filed ARC 1075C (Notice ARC 0925C, IAB 8/7/13), IAB 10/2/13, effective 11/6/13]

[1] January 16, 2013, effective date of the rescission of Chapter 99 and the adoption of new Chapter 99 [ARC 0483C] delayed until adjournment of the 2013 General Assembly by the Administrative Rules Review Committee at its meeting held January 8, 2013; delay lifted at the meeting held March 8, 2013.

CHAPTER 100
VITAL RECORDS REGISTRIES AND REPORTS

[Prior to 12/12/12, see [641] Chs 105 to 107]

641—100.1(144) Definitions. For the purpose of this chapter, the definitions in 641—Chapter 95 shall apply. In addition, the following definitions shall apply solely to this chapter:

"Adult," when used in reference to the mutual consent voluntary adoption registry, means an individual who has reached the age of 18 years at the time application is made.

"Aggregate form" means a compilation of the information received by the department on the Statistical Report of Termination of Pregnancy form for each item listed, with the exception of the report tracking number, the health care provider code, and any set of data for which the number is so small that the confidentiality of any person to whom the information relates may be compromised.

"Child," when used in reference to the declaration of paternity registry, means a person under 18 years of age for whom paternity has not been established.

"Court" means the juvenile court when used in reference to the declaration of paternity registry.

"Father" means the male, biological parent of a child when used in reference to the declaration of paternity registry.

"Registrant," when used in reference to the declaration of paternity registry, means a person who has registered and claims to be the father of a child.

"Registry" means the declaration of paternity registry or the mutual consent voluntary adoption registry.

"Sibling" means one of two or more persons who are born of the same parents or, sometimes, who have at least one parent in common. "Sibling" also means brother or sister when used in reference to the mutual consent voluntary adoption registry.

[**ARC 0483C**, IAB 12/12/12, effective 1/16/13; see Delay note at end of chapter]

641—100.2(144) Forms—property of department. All forms, certificates and reports pertaining to the registration of vital events are the property of the department and shall be surrendered to the state registrar upon demand.

100.2(1) The forms supplied or approved for reporting vital events shall be used for official purposes as provided for by law, rules and instructions of the state registrar.

100.2(2) No forms, except those furnished or approved by the state registrar, shall be used in the reporting of vital events or the making of copies of vital records.

[**ARC 0483C**, IAB 12/12/12, effective 1/16/13; see Delay note at end of chapter]

641—100.3(144) Declaration of paternity registry established. Pursuant to Iowa Code section 144.12A, there is established in the department a registry for the declaration of paternity of a putative father who wishes to register prior to the birth of a child and no later than the date of the filing of the petition for termination of parental rights.

100.3(1) The putative father who files a Declaration of Paternity Registry form with the state registrar shall provide the following:

a. Registrant's name, current address, social security number, and notarized signature and date signed;

b. The name, last-known address, and social security number, if known, of the mother of the child; and

c. The name of the child, if known, and the date and location of the birth of the child, if known.

100.3(2) The putative father who files the Declaration of Paternity Registry form shall be responsible to notify the state registrar in writing of any change in address.

100.3(3) The state registrar shall forward a copy of the declaration of paternity to the mother as notification that the person has registered, if the mother's name and address have been provided.

100.3(4) There shall be no fee required to file the declaration of paternity.

100.3(5) A fee as established pursuant to rule 641—95.6(144) shall be charged and remitted for conducting a search of the registry. The fee shall be retained for the search.

100.3(6) Upon written request and remittance of the required fee, the department shall conduct a search of the registry. Written requests may be submitted by only:

a. The biological mother of the child;

b. A court;

c. The department of human services;

d. The child support recovery unit for an action to establish paternity or support; or

e. The attorney of any party to an adoption, termination of parental rights, or establishment of paternity or support action.

100.3(7) If a declaration of paternity is on file, the department shall provide the name, address, and social security number of a registrant to the following:

a. The biological mother of the child;

b. A court;

c. The department of human services;

d. The child support recovery unit for an action to establish paternity or support; or

e. The attorney of any party to an adoption, termination of parental rights, or establishment of paternity or support action.

100.3(8) If no declaration of paternity is on file, a written statement to that effect shall be provided to the person making the inquiry.

100.3(9) Information from the declaration of paternity registry shall not be divulged to any person other than those listed in subrule 100.3(6) and shall be considered a confidential record as to any other person, except upon order of the court for good cause shown.

100.3(10) Information provided to the registry may be revoked by the registrant by the submission of a written statement, signed and acknowledged by the registrant before a notary public.

a. The statement shall include a declaration that to the best of the registrant's knowledge:

(1) The registrant is not the father of the named child; or

(2) That paternity of the true father has been established.

b. Revocation shall nullify the registration, and the information provided by the registrant shall be expunged.

c. Revocation is effective only following the birth of the child.

100.3(11) The Declaration of Paternity Registry form shall be available from the state registrar of vital records or the county registrar.

100.3(12) The declaration of paternity registry does not constitute an affidavit of paternity filed pursuant to Iowa Code section 252A.3A. Declarations filed shall be maintained in a registry separate and distinct from the affidavit of paternity registry.

100.3(13) A declaration of paternity filed with the registry may be used as evidence of paternity in an action to establish paternity or to determine a support obligation with respect to the putative father.

100.3(14) Failure or refusal to file a declaration of paternity shall not be used as evidence to avoid a legally established obligation of financial support for a child.

[**ARC 0483C**, IAB 12/12/12, effective 1/16/13; see Delay note at end of chapter]

641—100.4(144) Mutual consent voluntary adoption registry established. There is established in the department a mutual consent voluntary adoption registry. Adult adopted children, adult siblings, and the biological parents of adult adoptees may register with the mutual consent voluntary adoption registry to obtain identifying birth information.

100.4(1) All identifying information maintained in the registry is confidential.

100.4(2) All requests shall be completed on the Mutual Consent Voluntary Adoption Registry Application form available from the state registrar of vital records or the county registrar.

100.4(3) Pursuant to rule 641—95.6(144), a fee shall be charged and remitted for the filing of a completed application for the registry, and a fee shall be charged and remitted for updating applicant information maintained in the registry.

100.4(4) The state registrar shall reveal the identity of the biological parent to the adult adopted child or reveal the identity of the adult adopted child to the biological parent if all the following conditions are met:

a. A biological parent has filed a completed request form and provided consent to the revelation of the biological parent's identity to the adult adopted child, upon request of the adult adopted child;

b. An adult adopted child has filed a completed request form and provided consent to the revelation of the identity of the adult adopted child to a biological parent, upon request of the biological parent; and

c. The state registrar has been provided sufficient information to make the requested match with certainty.

100.4(5) The state registrar shall reveal the identity of the adult adopted child to an adult sibling or shall reveal the identity of an adult sibling to the adult adopted child if all of the following conditions are met:

a. An adult adopted child has filed a completed request form and provided consent to the revelation of the adult adopted child's identity to an adult sibling;

b. The adult sibling has filed a completed request form and provided consent to the revelation of the identity of the adult sibling to the adult adopted child; and

c. The state registrar has been provided sufficient information to make the requested match with certainty.

100.4(6) If the adult adopted child has a sibling who is a minor and who has also been adopted, the state registrar shall not grant the request of either the adult adopted child or the biological parent to reveal the identities of the parties.

100.4(7) A person who has filed a request or provided consent may withdraw the consent at any time prior to the release of any information by submitting a written withdrawal of consent statement with the state registrar.

100.4(8) The adult adoptee, adult sibling, and biological parent completing an application shall be responsible for updating the contact information.

100.4(9) The state registrar shall notify the parties via telephone, verify the address information, and provide written notice to the parties.

[**ARC 0483C**, IAB 12/12/12, effective 1/16/13; see Delay note at end of chapter]

641—100.5(144) Statistical report of termination of pregnancy report. A health care provider who initially identifies and diagnoses a spontaneous termination of pregnancy or who induces a termination of pregnancy shall file with the department a Statistical Report of Termination of Pregnancy form for each termination.

100.5(1) The health care provider shall make a good-faith effort to obtain all of the following information that is available with respect to each termination:

a. The confidential health care provider code as assigned by the department.

b. The report tracking number.

c. The maternal health services region of the Iowa department of public health, as designated as of July 1, 1997, in which the patient resides. If the patient resides in another state, the residence shall be reported as "nonresident."

d. The race of the patient.

e. The age of the patient.

f. The marital status of the patient.

g. The educational level of the patient.

h. The number of previous pregnancies, live births, and spontaneous or induced terminations of pregnancies.

i. The month and year in which the termination occurred.

j. The number of weeks since the patient's last menstrual period and a clinical estimate of gestation.

k. Whether the termination was spontaneous or induced.

l. The method used for an induced termination, including whether mifepristone was used.

100.5(2) The health care provider who identifies a spontaneous or induced termination shall prepare the report on the standard form and forward to the state registrar on or before the tenth day of each calendar month all records for the preceding month. Reports may be sent by certified mail to the state registrar. Termination reports shall be submitted within 30 days of the date of the occurrence.

100.5(3) The department shall provide the forms, or the provider may use the master copy of the form provided by the department to make copies for reporting.

100.5(4) The information shall be collected, reproduced, released, and disclosed in a manner which ensures the anonymity of:

a. The patient who experiences a termination of pregnancy;

b. The health care provider who identifies and diagnoses or induces a termination of pregnancy; and

c. The hospital, clinic, or health facility in which a termination of pregnancy is identified and diagnosed or induced.

100.5(5) The department may share information with federal public health officials for the purpose of securing federal funding or conducting public health research. However, in sharing the information, the department shall not relinquish control of the information, and any agreement entered into by the department with federal public health officials to share information shall prohibit the use, reproduction, release, or disclosure of the information by federal public health officials in a manner which violates Iowa Code section 144.29A.

100.5(6) The department shall annually publish a demographic summary of the information obtained, except that the department shall not reproduce, release, or disclose any information obtained which reveals the identity of any patient, health care provider, hospital, clinic, or other health facility, and shall ensure anonymity in the following ways:

a. The department may use information concerning the report tracking number or concerning the identity of a reporting health care provider, hospital, clinic, or other health facility only for the purpose of information collection. The department shall not reproduce, release, or disclose this information for any purpose other than for use in annually publishing the demographic summary.

b. The department shall enter information from any report of termination submitted within 30 days of receipt of the statistical report of termination of pregnancy and, following entry of the information, shall immediately destroy the report by shredding it. However, entry of the information from a report shall not include any health care provider, hospital, clinic, or other health facility identification information including, but not limited to, the confidential health care provider code, as assigned by the department.

c. To protect confidentiality, the department shall limit release of information in an aggregate form which prevents identification of any individual patient, health care provider, hospital, clinic, or other health facility.

d. The department shall establish and use a methodology to provide a statistically verifiable basis for any determination of the aggregate level at which information may be released so that the confidentiality of any person is not comprised. The methodology shall consider both the counts of the events for each item of information and the population that could be represented.

100.5(7) Reports, information, and records submitted and maintained are strictly confidential and shall not be released or made public upon subpoena, search warrant, discovery proceedings, or by any other means.

100.5(8) The department shall assign a code to any health care provider who may be required to report a termination. An application procedure shall not be required for assignment of a code to a health care provider.

100.5(9) A health care provider shall assign a report tracking number which enables the health care provider to access the patient's medical information without identifying the patient. The report tracking number shall be maintained by the provider for a period of six months after the end of the calendar year.

100.5(10) To ensure proper performance of the reporting requirements, it is preferred that a health care provider who practices within a hospital, clinic, or other health facility authorize one staff person to fulfill the reporting requirements.

100.5(11) Any person who knowingly violates a provision of these rules is guilty of a serious misdemeanor pursuant to Iowa Code section 144.52.

[**ARC 0483C**, IAB 12/12/12, effective 1/16/13; see Delay note at end of chapter]

These rules are intended to implement Iowa Code sections 144.29A, 144.52 and 252A.3A.

[Filed ARC 0483C (Notice ARC 0376C, IAB 10/3/12), IAB 12/12/12, effective 1/16/13][1]

[1] January 16, 2013, effective date of the rescission of Chapter 100 and the adoption of new Chapter 100 [ARC 0483C] delayed until adjournment of the 2013 General Assembly by the Administrative Rules Review Committee at its meeting held January 8, 2013; delay lifted at the meeting held March 8, 2013.

[Prior to 7/29/87, Health Department[470] Ch 101]

CHAPTER 101
DEATH CERTIFICATION, AUTOPSY AND DISINTERMENT

[Prior to 7/29/87, Health Department[470] Ch 101]

Rescinded **ARC 0483C**, IAB 12/12/12, effective 1/16/13

January 16, 2013, effective date of the rescission of Chapter 101 [ARC 0483C] delayed until adjournment of the 2013 General Assembly by the Administrative Rules Review Committee at its meeting held January 8, 2013; delay lifted at the meeting held March 8, 2013.

CHAPTER 102
CORRECTION AND AMENDMENT OF VITAL RECORDS

[Prior to 7/29/87, Health Department[470] Ch 102]

Rescinded **ARC 0483C**, IAB 12/12/12, effective 1/16/13

January 16, 2013, effective date of the rescission of Chapter 102 [ARC 0483C] delayed until adjournment of the 2013 General Assembly by the Administrative Rules Review Committee at its meeting held January 8, 2013; delay lifted at the meeting held March 8, 2013.

CHAPTER 103
CONFIDENTIALITY OF RECORDS

[Prior to 7/29/87, Health Department[470] Ch 103]

Rescinded **ARC 0483C**, IAB 12/12/12, effective 1/16/13

January 16, 2013, effective date of the rescission of Chapter 103 [ARC 0483C] delayed until adjournment of the 2013 General Assembly by the Administrative Rules Review Committee at its meeting held January 8, 2013; delay lifted at the meeting held March 8, 2013.

CHAPTER 104
COPIES OF VITAL RECORDS

[Prior to 7/29/87, Health Department[470] Ch 104]

Rescinded **ARC 0483C**, IAB 12/12/12, effective 1/16/13

January 16, 2013, effective date of the rescission of Chapter 104 [ARC 0483C] delayed until adjournment of the 2013 General Assembly by the Administrative Rules Review Committee at its meeting held January 8, 2013; delay lifted at the meeting held March 8, 2013.

CHAPTER 105
DECLARATION OF PATERNITY REGISTRY

Rescinded **ARC 0483C**, IAB 12/12/12, effective 1/16/13

January 16, 2013, effective date of the rescission of Chapter 105 [ARC 0483C] delayed until adjournment of the 2013 General Assembly by the Administrative Rules Review Committee at its meeting held January 8, 2013; delay lifted at the meeting held March 8, 2013.

CHAPTER 106
REPORTING OF TERMINATION OF PREGNANCY

Rescinded **ARC 0483C**, IAB 12/12/12, effective 1/16/13

January 16, 2013, effective date of the rescission of Chapter 106 [ARC 0483C] delayed until adjournment of the 2013 General Assembly by the Administrative Rules Review Committee at its meeting held January 8, 2013; delay lifted at the meeting held March 8, 2013.

CHAPTER 107
MUTUAL CONSENT VOLUNTARY ADOPTION REGISTRY

Rescinded **ARC 0483C**, IAB 12/12/12, effective 1/16/13

January 16, 2013, effective date of the rescission of Chapter 107 [ARC 0483C] delayed until adjournment of the 2013 General Assembly by the Administrative Rules Review Committee at its meeting held January 8, 2013; delay lifted at the meeting held March 8, 2013.

CHAPTER 108
MEDICAL RESIDENCY TRAINING STATE MATCHING GRANTS PROGRAM

641—108.1(135) Scope and purpose. The medical residency training state matching grants program is established to provide greater access to health care by increasing the number of practicing physicians in Iowa through the expansion of residency positions in Iowa. The department shall provide funding to sponsors of accredited graduate medical education residency programs for the establishment, expansion, or support of medical residency training programs that will increase the number of residents trained. Funding for the program may be provided through the health care workforce shortage fund, medical residency training account, and is specifically dedicated to the medical residency training state matching grants program as established in Iowa Code section 135.176. These rules shall be implemented only to the extent funding is available.
[**ARC 1480C**, IAB 6/11/14, effective 7/16/14]

641—108.2(135) Definitions. For the purposes of these rules, the following definitions shall apply:

"Accredited medical residency training program" means a graduate medical education program approved by the Accreditation Council for Graduate Medical Education (ACGME) or by the American Osteopathic Association (AOA).

"Department" means the Iowa department of public health.

"Director" means the director of the Iowa department of public health.

"Health professional shortage areas" means federal designations that are based on general health professional shortage area (HPSA) designation criteria, plus additional criteria and guidelines specific to each of the three types of designations from the Health Resources and Services Administration Federal Office of Shortage Designations. The three types of designations include primary care, dental and mental health.

"In excess of the federal residency cap" means a residency position for which no federal Medicare funding is available because the residency position is a position beyond the cap for residency positions established by the federal Balanced Budget Act of 1997, Pub. L. No. 105-33.

"New or alternative campus accredited medical residency training program" means a program that is accredited by a recognized entity approved for such purpose by the ACGME or the AOA with the exception that a new medical residency training program that, by reason of an insufficient period of operation is not eligible for accreditation on or before the date of submission of an application for a grant, may be deemed accredited if the ACGME or the AOA finds, after consultation with the appropriate accreditation entity, that there is reasonable assurance that the program will meet the accreditation standards of the entity prior to the date of graduation of the initial class in the program.

"Sponsor" means a hospital, school, or consortium located in Iowa that sponsors and maintains primary organizational and financial responsibility for a graduate medical education residency program in Iowa and is accountable to the accrediting body.
[**ARC 1480C**, IAB 6/11/14, effective 7/16/14]

641—108.3(135) Eligibility criteria. To be eligible for a matching grant, a sponsor shall satisfy the following requirements and qualifications:

108.3(1) A sponsor shall be financially and organizationally responsible for a residency training program that is accredited by the ACGME or by the AOA.

108.3(2) A sponsor shall establish a dedicated fund to support a residency program. A sponsor funding residency positions in excess of the federal residency cap exclusive of funds provided under this program is deemed to have satisfied this requirement and shall be eligible for a matching grant equal to the amount of funds expended for such residency positions, subject to the limitation on the maximum award of grant funds specified in rule 641—108.4(135).

108.3(3) A sponsor shall demonstrate through documented financial information that funds have been reserved and will be expended by the sponsor in the amount required to provide matching funds for each residency in the request for proposal for state matching funds. A sponsor shall document this requirement by providing with its request for proposal a signed, notarized statement of the organization's

chief financial officer that such a fund exists, as well as what amounts of moneys have been set aside in this fund for purposes of supporting residency programs.

108.3(4) A sponsor shall demonstrate a need for such residency program in the state by providing with its request for proposal objective evidence of such need including:

a. Workforce data, including state and federal workforce data and data from tracking databases;

b. Population data, including community health needs assessments;

c. Supply and demand data, including health professional shortage area designations; and

d. Other related research including unique community- or state-level factors which establish a need for such residency program.

108.3(5) A sponsor shall submit with its request for proposal a recruitment and retention plan to encourage residents to enter practice in Iowa with a preference for health professional shortage areas and to demonstrate over time the impact on Iowa's workforce.

[**ARC 1480C**, IAB 6/11/14, effective 7/16/14]

641—108.4(135) Amount of grant.

108.4(1) The department shall award funds based upon the funds set aside in the special fund, as identified in subrule 108.3(3).

108.4(2) The total amount of a grant awarded to a sponsor shall be limited to no more than 25 percent of the amount of funds the sponsor demonstrates through documented financial information have been reserved and will be expended by the sponsor for each residency sponsored for the purpose of the residency program.

108.4(3) A sponsor, if awarded, shall enter into a contract with the department over a three-year project period to include one year (12 months) renewable contract periods. Annual contracts shall include annual budgets and, upon approval of annual performance measures, renewal applications for the project period. Annual contract periods shall be renewed based on the availability of funds.

108.4(4) A sponsor shall receive funds based on budgeted expenses that include but are not limited to:

a. Stipends and fringe benefits for residents and fellows;

b. The portion of teaching physician salaries and fringe benefits associated with teaching and supervision of residents and fellows;

c. Other direct costs that can be attributed to medical education (e.g., clerical salaries, telephone, office supplies).

108.4(5) An individual sponsor shall not receive more than 25 percent of the state matching funds available each year to support the program. However, if less than 95 percent of the available funds have been awarded in a given year, a sponsor may receive more than 25 percent of the state matching funds available if total funds awarded do not exceed 95 percent of the available funds. If more than one sponsor meets the requirements of this rule and has established, expanded, or supported a graduate medical residency training program in excess of the sponsor's 25 percent maximum share of state matching funds, the state matching funds shall be divided proportionately among such sponsors.

[**ARC 1480C**, IAB 6/11/14, effective 7/16/14]

641—108.5(135) Review process.

108.5(1) The department shall follow requirements for competitive selection contained in 641—Chapter 176 in awarding these funds.

108.5(2) The department shall establish a request for proposal process for sponsors eligible to receive funding. The request for proposal and review process and review criteria for preference in awarding the grants shall be described in the request for proposal, including preference in the residency specialty. This preference may be reflective of a subspecialty where particular demands for services have been demonstrated, of geographic areas of preference, or of other particular preferences that advance the objectives of the program.

108.5(3) Each request for proposal issued by the department will identify one or more of the following purposes for use of the funding:

a. The establishment of new or alternative campus accredited medical residency training programs;

b. The provision of new residency positions within existing accredited medical residency or fellowship training programs; or

c. The funding of residency positions which are in excess of the federal residency cap.

108.5(4) An applicant may appeal the denial of a properly submitted request for proposal. Appeals shall be governed by rule 641—176.8(135,17A).

[**ARC 1480C**, IAB 6/11/14, effective 7/16/14]

These rules are intended to implement Iowa Code section 135.176.

[Filed ARC 1480C (Notice ARC 1392C, IAB 4/2/14), IAB 6/11/14, effective 7/16/14]

CHAPTER 109
PRESCRIPTION DRUG DONATION REPOSITORY PROGRAM

641—109.1(135M) Definitions. For purposes of this chapter, the following definitions apply:

"Centralized repository" means a distributor approved by the contractor and licensed pursuant to 657 IAC Chapter 17 that accepts donated drugs, conducts a safety inspection of the drugs, and ships the donated drugs to a local repository to be dispensed in compliance with this chapter and federal and state laws, rules and regulations.

"Contractor" means the third party approved by the department to implement and administer the prescription drug donation repository program.

"Controlled substance" means the same as defined in Iowa Code section 124.101.

"Department" means the Iowa department of public health.

"Indigent" means a person with an income that is below 200 percent of the federal poverty level (FPL) as defined by the most recently revised poverty income guidelines published by the United States Department of Health and Human Services.

"Local repository" means a pharmacy or medical facility that elects to accept and dispense donated drugs and that meets the eligibility requirements of rule 641—109.3(135M).

"Medical facility" means any of the following:

1. A physician's office.
2. A hospital.
3. A health clinic.
4. A nonprofit health clinic, including a federally qualified health center as defined in 42 U.S.C. § 1396d(l)(2)(B); a rural health clinic as defined in 42 U.S.C. § 1396d(l)(1); and a nonprofit health clinic that provides medical care to patients who are indigent, uninsured, or underinsured.
5. A free clinic as defined in Iowa Code section 135.24.
6. A charitable organization as defined in Iowa Code section 135.24.
7. A nursing facility as defined in Iowa Code section 135C.1.

"NDC #" means the unique national drug code number that identifies a specific approved drug.

"Nurse practitioner" means an advanced registered nurse practitioner as defined in 655 IAC Chapter 7.

"Pharmacist" means a pharmacist as defined in Iowa Code section 155A.3.

"Pharmacy" means a pharmacy as defined in Iowa Code section 155A.3.

"Physician" means an individual licensed under Iowa Code chapter 148, 150, or 150A.

"Prescription drug" means the same as defined in Iowa Code section 155A.3 and includes cancer drugs and antirejection drugs, but does not include controlled substances.

"Supplies" means the supplies necessary to administer the prescription drugs donated.

"USP" means United States Pharmacopoeia.

641—109.2(135M) Purpose. The overall purpose of this chapter is to establish administrative rules in accordance with Iowa Code chapter 135M relative to the following:

1. Requirements for medical facilities and pharmacies to accept and dispense donated prescription drugs and supplies.
2. Eligibility criteria for individuals to receive donated prescription drugs and supplies.

641—109.3(135M) Eligibility criteria for program participation by medical facilities and pharmacies.

109.3(1) To be eligible for participation in the prescription drug donation repository program, a medical facility or pharmacy shall be in compliance with all applicable federal and state laws, including laws applicable to the storage and distribution of drugs and the appropriate licensure standards, and shall hold active, nonrestricted, state-issued licenses or registrations in good standing.

109.3(2) Participation in the prescription drug donation repository program is voluntary.

109.3(3) A pharmacy or medical facility may elect to participate in the prescription drug donation repository program by providing, on a form prescribed by the department and available on the program's Web page, written notification to the centralized repository of all of the following:

a. The name, street address, and telephone number of the pharmacy or medical facility, and any state-issued license or registration number issued to the pharmacy or medical facility, including the name of the issuing agency.

b. The name and telephone number of the responsible pharmacist, physician or nurse practitioner who is employed by or under contract with the pharmacy or medical facility.

c. A statement, signed and dated by the responsible pharmacist, physician or nurse practitioner, indicating that the pharmacy or medical facility meets the eligibility requirements under this rule and shall comply with the requirements of this chapter.

109.3(4) Withdrawal from participation. A pharmacy or medical facility may withdraw from participation in the prescription drug donation repository program at any time by providing written notice to the centralized repository on a form prescribed by the department and available on the program's Web page.

641—109.4(135M) Standards and procedures for accepting donated prescription drugs and supplies.

109.4(1) Any individual who is 18 years of age or older may donate legally obtained prescription drugs or supplies to the centralized repository or a local repository if the drugs or supplies meet the requirements of this rule, as determined by a pharmacist who is employed by or under contract with a drug repository.

109.4(2) No drugs that require storage temperatures other than normal room temperature as specified by the manufacturer or United States Pharmacopoeia shall be donated or accepted as part of the prescription drug donation repository program. Drugs that require storage temperatures other than normal room temperature as specified by the manufacturer or USP shall not be donated or accepted because of the increased potential for these drugs to become adulterated. Excluded from this restriction are drugs donated directly from a drug manufacturer.

109.4(3) Controlled substances shall not be donated or accepted. Pursuant to federal and state laws, a controlled substance cannot be returned or reused once the drug has been dispensed to a patient.

109.4(4) The centralized repository or a local repository may accept a prescription drug only if all of the following requirements are met:

a. The drug is in its original sealed and tamper-evident packaging. However, a drug in a single-unit dose or blister pack with the outside packaging opened may be accepted if the single-unit-dose packaging is undisturbed;

b. The drug has been stored according to manufacturer or USP storage requirements;

c. The packaging contains the lot number and expiration date of the drug. If the lot number is not retrievable, all specified medications will be destroyed in the event of a recall, pursuant to Iowa board of pharmacy rules;

d. The drug has an expiration date that is more than six months after the date that the drug was donated. However, a donated prescription drug bearing an expiration date that is six months or less after the date the prescription drug was donated may be accepted and distributed if the drug is in high demand and can be dispensed for use prior to the drug's expiration date;

e. The drug does not have any physical signs of tampering or adulteration, and there is no reason to believe that the drug is adulterated;

f. The packaging does not have any physical signs of tampering, misbranding, deterioration, compromised integrity or adulteration; and

g. All drugs shall be inventoried at the centralized repository or a local repository. The inventory shall include the name of the drug, strength of the drug, quantity of the drug, and the date of donation if the drug has been continually under the control of a health care professional. If the drug has not been continually under the control of a health care professional, the repository shall collect a donation form

provided by the prescription drug donation repository program that is signed by the person making the donation or that person's authorized representative.

109.4(5) A repository may accept supplies necessary to administer the prescription drugs donated only if all of the following requirements are met:

a. The supplies are in their original, unopened, sealed packaging;

b. The supplies are not adulterated or misbranded; and

c. All supplies shall be inventoried at the centralized repository or a local repository. The inventory shall include a description of the supplies and the date donated. Such inventory shall be recorded on a form provided by the prescription drug donation repository program.

109.4(6) Drugs and supplies may be donated on the premises of a participating centralized repository or a local repository to a person designated by the repository. A drop box may not be used to deliver or accept donations.

641—109.5(135M) Standards and procedures for inspecting and storing donated prescription drugs and supplies.

109.5(1) A licensed pharmacist employed by or under contract with the centralized repository or a local repository shall inspect donated prescription drugs and supplies to determine, to the extent reasonably possible in the judgment of the pharmacist, that the drugs and supplies are not adulterated or misbranded, are safe and suitable for dispensing, and are not ineligible drugs or supplies. The pharmacist who inspects the drugs shall sign an inspection record stating the above and attach it to the copy of the inventory or donor record provided with the drugs. If a local repository receives drugs and supplies from the centralized repository, the local repository does not need to reinspect the drugs and supplies.

109.5(2) The centralized repository and local repositories shall store donated drugs and supplies in a secure storage area under environmental conditions appropriate for the drugs or supplies being stored. Donated drugs and supplies may not be stored with nondonated inventory. When donated drugs are not inspected immediately upon receipt, a repository shall quarantine the donated drugs separately from all dispensing stock until the donated drugs have been inspected and approved for dispensing under the program.

109.5(3) Repositories shall destroy donated noncontrolled substances that are not suitable for dispensing and make a record of such destruction according to board of pharmacy rule 657—8.8(124,155A). The destruction record shall be made in the same manner as prescribed for the record of return or destruction of a controlled substance in subrule 109.5(4).

109.5(4) Controlled substances shall not be accepted for donation.

a. Controlled substances submitted for donation shall be documented and returned immediately to the donor or the donor's representative that provided the drugs.

b. In the event controlled substances enter the centralized repository or a local repository and it is not possible or practicable to return the controlled substances to the donor or the donor's representative due to inability to identify the donor or the donor's representative or due to refusal by the donor or the donor's representative to receive them, abandoned controlled substances shall be documented and destroyed beyond reclamation pursuant to rules of the board of pharmacy examiners. Such destruction shall be performed by a pharmacist or other person that has authority to dispense controlled substances and shall be witnessed by another responsible adult employee of the repository.

109.5(5) If a repository receives a recall notification, the repository shall perform a uniform destruction of all of the recalled prescription drugs in the repository and complete the destruction information form for all donated drugs destroyed. If a recalled drug has been dispensed, the repository shall immediately notify the recipient of the recalled drug pursuant to established drug recall procedures.

641—109.6(135M) Standards and procedures for dispensing donated prescription drugs and supplies.

109.6(1) Donated drugs and supplies may be dispensed only if the drugs or supplies are prescribed by a health care practitioner for use by an eligible individual and are dispensed by a licensed pharmacist, physician or nurse practitioner.

109.6(2) A repository shall prioritize dispensing to an individual requesting drugs through the program as follows:

a. First, to an indigent individual;

b. Second, to an individual who has no active third-party prescription drug reimbursement coverage for the drug prescribed; and

c. Third, to any other individual if an indigent or uninsured individual is unavailable.

109.6(3) A repository shall dispense donated prescription drugs in compliance with applicable federal and state laws and regulations for dispensing prescription drugs, including all requirements relating to packaging, labeling, record keeping, drug utilization review, and patient counseling.

109.6(4) The centralized repository and a local repository shall remove the original donor's identification and the name of the dispensing pharmacy from the package prior to dispensing the drugs or supplies.

109.6(5) The centralized repository and a local repository shall be responsible for drug recalls and shall have an established mechanism to notify recipients in the event of a drug recall.

109.6(6) Prescription drugs or supplies donated under this program shall not be resold.

109.6(7) The participating centralized repository and local repositories may distribute drugs and supplies donated under this program to other participating repositories for use pursuant to the program. The repository distributing the drugs or supplies shall complete a transfer form.

641—109.7(135M) Eligibility criteria for individuals to receive donated prescription drugs and supplies.

109.7(1) An individual who requests drugs from the prescription drug donation repository program shall certify to the repository that the individual is a resident of Iowa and meets one or both of the following criteria:

a. Is indigent;

b. Has no active third-party prescription drug reimbursement coverage for the drug prescribed.

109.7(2) The local repository shall collect from each individual recipient a signed intake collection form provided by the department or its contractor.

a. The intake collection form shall attest that:

(1) The individual is a resident of the state of Iowa;

(2) The individual's income does not exceed 200 percent of the FPL;

(3) The individual is uninsured and has no prescription coverage or is underinsured and has no prescription coverage;

(4) The individual acknowledges that the drugs may have been donated; and

(5) The individual consents to a waiver of the requirement for child resistant packaging of the Poison Prevention Packaging Act.

b. The intake collection form will include an identification card to be given to the recipient for continued use for one year.

109.7(3) The identification card is valid for one year or until the new federal poverty guidelines have been published for all prescriptions and supplies.

109.7(4) A summary of data taken from the intake collection form is to be sent via regular mail, E-mail or facsimile to the centralized repository for data collection.

641—109.8(135M) Forms and record keeping.

109.8(1) The following forms developed for the administration of this program shall be utilized by participants of the program and are available on the program's Web page on the department's Web site, www.idph.state.ia.us.

a. Prescription drug donation repository program notice of participation or withdrawal.

b. Prescription drug donation repository program donation, transfer, inventory or destruction record.

c. A record of medications dispensed.

109.8(2) The prescription drug donation repository program recipient data collection form and identification card are given to the recipient by the local repository, and the completed data collection form is collected from the recipient by the local repository.

109.8(3) Record-keeping requirements.

a. All records required to be maintained as a part of the prescription drug donation repository program shall be maintained for a minimum of five years by participating pharmacies and medical facilities.

b. Records required as part of this program shall be maintained pursuant to all current applicable practice acts.

c. Data collected by the prescription drug donation repository program from all participating repositories shall be submitted quarterly or upon request to the centralized repository. The data will consist of the information collected in accordance with 641—109.8(135M), Forms and record keeping.

d. The centralized repository and the contractor shall submit reports to the department as required by the contract or upon request of the department.

641—109.9(135M) Handling fee. A repository may charge the recipient of a donated drug a handling fee, not to exceed a maximum of 200 percent of the Medicaid professional dispensing fee as established by rule of the department of human services, to cover stocking and dispensing costs. A prescription drug dispensed through the prescription drug donation repository program shall not be eligible for reimbursement under the medical assistance program.

641—109.10(135M) List of drugs and supplies program will accept. All prescription drugs, excluding controlled substances, that have been approved for medical use in the United States, that are listed in the USP or National Formulary (USP/NF), and that meet the criteria for donation established by these rules may be accepted for donation under the prescription drug donation repository program.

641—109.11(135M) Exemption from disciplinary action, civil liability and criminal prosecution.

109.11(1) A drug manufacturer acting reasonably and in good faith is not subject to criminal prosecution or civil liability for injury, death, or loss to a person or property for matters related to the donation, acceptance, or dispensing of a prescription drug manufactured by the drug manufacturer that is donated under this chapter, including liability for failure to transfer or communicate product or consumer information or the expiration date of the donated prescription drug.

109.11(2) Except as provided in subrule 109.11(3), a person other than a drug manufacturer subject to subrule 109.11(1), acting reasonably and in good faith, is immune from civil liability and criminal prosecution for injury to or the death of an individual to whom a donated prescription drug is dispensed under this chapter and shall be exempt from disciplinary action related to the person's acts or omissions related to the donation, acceptance, distribution, or dispensing of a donated prescription drug under this chapter.

109.11(3) The immunity and exemption provided in subrule 109.11(2) does not extend to any of the following:

a. The donation, acceptance, distribution, or dispensing of a donated prescription drug under this chapter by a person if the person's acts or omissions are not performed reasonably and in good faith.

b. Acts or omissions outside the scope of the program.

641—109.12 and **109.13** Reserved.

641—109.14(135M) Prescription drug donation repository in disaster emergencies. The following are the requirements for the department to receive and distribute prescription drugs and supplies in

preparation for a disaster emergency proclaimed by the governor or in preparation for a public health disaster.

109.14(1) The department may receive prescription drugs and supplies directly from the prescription drug donation repository contractor and dispense prescription drugs and supplies through licensed personnel during or in preparation for a disaster emergency proclaimed by the governor pursuant to Iowa Code section 29C.6 or during or in preparation for a public health disaster as defined in 2009 Iowa Code Supplement section 135.140, subsection 6.

109.14(2) The department may receive and distribute prescription drugs and supplies as defined in Iowa Code section 135.142 to any Iowan who has been a victim of a disaster emergency proclaimed by the governor.

[**ARC 8983B**, IAB 8/11/10, effective 9/15/10]

These rules are intended to implement Iowa Code chapter 135M.

[Filed 1/10/07, Notice 11/22/06—published 1/31/07, effective 3/7/07]

[Filed 7/10/08, Notice 5/21/08—published 7/30/08, effective 9/3/08]

[Filed ARC 8983B (Notice ARC 8765B, IAB 5/19/10), IAB 8/11/10, effective 9/15/10]

CHAPTER 110
CENTER FOR RURAL HEALTH AND PRIMARY CARE

641—110.1(135) Purpose and scope. The following rules developed by the department of public health govern the organization of the center for rural health and primary care within the bureau of health delivery systems of the department of public health.

641—110.2(135) Definitions.

"Area health education center (AHEC)" means the linking of university health centers with community-based delivery systems in order to improve delivery of health care.

"Center for rural health and primary care" means the department of public health administrative entity that is responsible for provision of technical planning assistance to rural communities and counties, administration of a comprehensive primary care provider recruitment and retention endeavor, coordination of services to provide research of rural occupational health injuries and hazards, and coordination with the following: the center for agricultural health and safety, the center for health effects of environmental contamination, and the department of agriculture and land stewardship.

"Center for rural health and primary care advisory committee" means a group of individuals appointed by the governor, department directors and the Iowa legislature whose purpose is to provide advice and make recommendations on rural health issues to the center for rural health and primary care, department of public health.

"Community grant program" means a program that provides assistance in the form of a forgivable loan, grant, or other nonfinancial assistance to communities, to support the effort of a community which is part of the community's long-term community health services assessment and developmental plan.

"Community health services assessment and developmental plan" means a comprehensive health services assessment and plan which has been developed through a community-wide collaborative effort of public and private entities, including citizens at large, located in rural communities.

"Department" means the Iowa department of public health.

"Director" means the director of the department of public health.

"Primary care collaborative work group" means a group of individuals who, at a minimum, represent the following entities, who are responsible for coordination of all statewide recruitment and retention activities and for recommendations related to the implementation of the primary care provider recruitment and retention endeavor (PRIMECARRE): University of Iowa college of medicine, University of Osteopathic Medicine and Health Sciences, University of Iowa physician assistant school, University of Iowa nurse practitioner school, University of Osteopathic Medicine and Health Sciences physician assistant program, Iowa-Nebraska primary care association, Iowa medical society, Iowa osteopathic medical association, Iowa chapter of American college of osteopathic family physicians, Iowa academy of family physicians, nurse practitioner association, Iowa nurses association, Iowa hospital association, and Iowa physician assistants association.

"Primary care health professional" means an individual who is providing primary health services, and is licensed to practice in the state of Iowa.

"Primary care provider community scholarship program" means a scholarship program that provides obligated-service scholarships to eligible health professional students for qualifying educational expenses incurred to obtain the credentials in that profession in return for providing primary care services in health professional shortage areas in the state.

"Primary care provider loan repayment program" means a loan repayment for qualifying loans to eligible health professionals who choose to establish practices in designated health professional shortage areas of the state.

"Primary care provider recruitment and retention endeavor (PRIMECARRE)" means a comprehensive primary health care initiative to promote and assist local efforts in developing health care provider recruitment and retention programs, and which includes a community grant program, a

primary care provider loan repayment program, primary care provider community scholarships, and area health education centers.

"Primary health services" means health services regarding family practice, internal medicine, pediatrics, obstetrics and gynecology, dentistry, or mental health that are provided by physicians or other health professionals.

641—110.3(135) Responsibilities of the center.

110.3(1) The center for rural health and primary care shall provide technical planning assistance to rural communities and counties exploring innovative means of delivering rural health services through community health services assessment, planning, and implementation, including but not limited to hospital conversions, cooperative agreements among hospitals, physician and health practitioner support, recruitment and retention of primary health care providers, public health services, emergency medical services, medical assistance facilities, rural health care clinics, and alternative means which may be included in the long-term community health services assessment and developmental plan.

110.3(2) The center for rural health and primary care shall encourage collaborative efforts of the local boards of health, hospital governing boards, and other public and private entities located in rural communities to adopt a long-term community health services assessment and developmental plan.

110.3(3) The center for rural health and primary care shall provide technical assistance to assist rural communities in improving Medicare reimbursements or establishing additional sources of funding through initiatives such as rural health clinics, distinct part skilled nursing facility beds, and the swing-bed program.

110.3(4) The center for rural health and primary care shall coordinate services to provide research for the following:

a. Examination of the prevalence of rural occupational health injuries in the state.

b. Assessment of training and continuing education available through local hospitals and others relating to diagnosis and treatment of diseases associated with rural occupational health hazards.

c. Determination of continuing education support necessary for rural health practitioners to diagnose and treat illnesses caused by exposure to rural occupational health hazards.

d. Determination of the types of actions that can help prevent agricultural accidents, surveillance and reporting of disabilities suffered by persons engaged in agricultural-related injuries and diseases in the state.

e. Identifying causal factors associated with agricultural-related injuries and diseases, and indicating the effectiveness of intervention programs designed to reduce injuries and diseases.

f. Cooperation with the center for agricultural health and safety, the center for health effects of environmental contamination and the department of agriculture and land stewardship, to coordinate programs to the extent practicable.

110.3(5) The center for rural health and primary care shall administer grants for farm safety education efforts directed to rural families for the purpose of preventing farm-related injuries to children.

110.3(6) The center for rural health and primary care shall administer a primary care provider recruitment and retention endeavor (PRIMECARRE).

110.3(7) The department of public health shall, in cooperation with the primary care collaborative work group, coordinate the initiative for the development of area health education centers, including making application for a federal grant.

641—110.4(135) Advisory committee to the center for rural health and primary care.

110.4(1) The purpose of the advisory committee is to provide advice and make recommendations on rural health issues to the center for rural health and primary care, department of public health.

110.4(2) The advisory committee will provide the expertise and technical assistance necessary to review and recommend policies pertinent to rural health issues, as well as guidelines for grants and other programs of the center for rural health and primary care.

110.4(3) The advisory committee will review reports prepared for the general assembly and make recommendations regarding the reports compiled.

110.4(4) The advisory committee will evaluate new care delivery concepts arising to meet the needs of the rural population.

641—110.5(135) Organization. The advisory committee to the center for rural health and primary care shall consist of one representative, approved by the respective agency, of each of the following agencies: the department of agriculture and land stewardship, the Iowa department of public health, the department of inspections and appeals, the national institute for rural health policy, the social and behavioral research center for rural health, the institute of agricultural medicine and occupational health, and the Iowa state association of counties. The governor shall appoint two representatives of consumer groups active in rural health issues and a representative of each of two farm organizations active within the state, a representative of an agricultural business in the state, a practicing rural family physician, a practicing rural physician assistant, a practicing rural advanced registered nurse practitioner, and a rural health practitioner who is not a physician, physician assistant, or advanced registered nurse practitioner, as members of the advisory committee. The advisory committee shall also include as members two state representatives, one appointed by the speaker of the house of representatives and one by the minority leader of the house, and two state senators, one appointed by the majority leader of the senate and one by the minority leader of the senate.

641—110.6(135) Meetings.

110.6(1) *Meeting dates.* The advisory committee shall meet at least quarterly to conduct its business. Meetings can be scheduled as business requires, but notice to committee members must be at least five working days prior to the meeting date. The administrative head of the center for rural health and primary care shall attend these meetings.

110.6(2) *Meeting procedures.* Robert's Rules of Order shall govern at all meetings.

110.6(3) *Quorum.* A majority of the total membership shall constitute a quorum. Action can be taken by a vote of the majority of the membership.

110.6(4) *Vacancies.* Vacancies will be filled in the same manner as was prescribed in the Code of Iowa. In the case of a vacancy the chairperson will notify the agency of the need to appoint another representative.

110.6(5) *Term of appointment.* Unless otherwise specified by law, term of appointment is for two years with no more than three consecutive terms, excepting the department of public health representative. Exceptions for individual reappointment from organizations represented shall be determined by the director of public health.

110.6(6) *Subcommittees.* The advisory committee for the center for rural health and primary care may designate one or more subcommittees to have such powers and perform such duties as may be deemed necessary by the committee.

641—110.7 to **110.10** Reserved.

PRIMECARRE COMMUNITY GRANT PROGRAM

641—110.11(135) Purpose. The purpose of the PRIMECARRE community grant program is to support community efforts which are part of the community's long-term community health services assessment and developmental plan. A community or region applying for assistance must complete a community health services assessment and adopt a long-term developmental plan. The community may request assistance with the assessment from the center for rural health and primary care. The long-term developmental plan shall include a clear commitment to informing high school students of the health care opportunities which may be available to such students. The grant assistance may be in the form of a forgivable loan, grant, or other nonfinancial assistance as deemed appropriate by the center for rural health and primary care. Grants or other assistance provided by the center are intended to promote and accommodate local creativity in efforts to recruit and retain health care professionals to provide services in the locality. Notice of the availability of these public funds shall be published in the Iowa Administrative Bulletin in accordance with 641—Chapter 176.

110.11(1) *Eligibility.* The following requirements must be met in order to be eligible for the program:

a. The applicant must be a single community with a population of 10,000 or less, or a region consisting of communities with populations of 10,000 or less, respectively.

b. The community or region must have illustrated efforts to meet the health care provider needs of the locality and surrounding area.

c. The community or region must have completed a community health services assessment and adopted a long-term developmental plan as established herein.

d. A letter of intent must be submitted by January 1 preceding the year for which application for assistance is to be made.

110.11(2) *Funding limitations.* Grants awarded under the program shall be subject to the following limitations:

a. An award of no more than $10,000 for a single community or region with a population of 10,000 or less.

b. An award of no more than $1 per capita for a region in which the population exceeds 10,000.

110.11(3) *Use of funds.* Funds may be used for the following:

a. The procurement of clinical equipment, clinical facilities, and telecommunications facilities.

b. Support for locum tenens arrangements and primary care provider mentor programs.

c. Other capacity-building activities as they relate to recruitment and retention of primary health care providers.

110.11(4) *Matching requirements.* Applications submitted shall contain a commitment of at least a dollar-for-dollar match of the grant assistance.

110.11(5) *Application process.* Applicants for grant funds must complete application forms provided by the department. Application materials shall be made available by the department at least 45 days prior to the application due date. Grant applications will be issued in accordance with 641—Chapter 176.

110.11(6) *Selection criteria and review process.* Selection criteria will be based on illustrated efforts to meet the health care provider needs of the locality and surrounding area. Selection criteria and the process for evaluation of applications shall be described in the application materials provided by the department. A competitive grant application review committee shall be appointed by the administrative head of the center for rural health and primary care. Grants will be awarded according to review criteria developed by the center, in accordance with 641—Chapter 176.

110.11(7) *Notice of grant award.* The director of public health shall notify all applicants in writing of the decision of grant awards.

110.11(8) *Appeals.* Applicants with a denied request for funding may appeal the decision of grant awards. The appeal shall be made in writing to the director, Iowa department of public health, within 10 days of the notification date of the grant awards decision. The appeal shall be mailed by certified mail, return receipt requested, or delivered by personal service. The decision of the director of public health becomes the department's final action and shall be sent by certified mail, return receipt requested, or delivered by personal service within 14 days of the receipt of the appeal.

110.11(9) *Grantee oversight.* The department shall monitor the use of funds granted to communities to ensure accountability and conformance with legislative intent. Oversight processes shall be described in the application materials provided by the department.

641—110.12 to **110.15** Reserved.

PRIMECARRE PRIMARY CARE PROVIDER
COMMUNITY SCHOLARSHIP PROGRAM

641—110.16(135) Purpose. A primary care provider community scholarship program is established to recruit and to provide scholarships to train primary health care practitioners in federally designated health professional shortage areas of the state. If sufficient state funds are available, applications will be considered for scholarship placement in communities not located in federally designated shortage areas. Under the program, scholarships may be awarded to a recipient for educational expenses incurred

while completing an accredited health education program directly related to obtaining the credentials necessary to practice the recipient's health profession. Notice of the availability of these public funds shall be published in the Iowa Administrative Bulletin in accordance with 641—Chapter 176.

110.16(1) *Student eligibility.* The following requirements must be met by students in order to be eligible for the program:

a. The status of the student's citizenship must meet requirements of the National Health Service Corps scholarship program.

b. The student must be enrolled or accepted for enrollment as a student in an accredited primary care health professions program, and meet eligibility requirements of Section 338A of the Public Health Service Act as amended November 16, 1990, by Public Law 101-597.

c. The student must agree, while enrolled in a health professional school, to maintain an acceptable level of academic standing as determined by the school.

d. The student must agree to meet educational and licensure requirements necessary to become a licensed primary care health professional in the state.

e. The student must agree to provide full-time primary health care services in a designated shortage area in the state for the minimum number of years required by federal programs providing funding support for the program.

f. The student must agree not to discriminate on the basis of the ability of the individual to pay for such care or on the basis that payment for such care will be made pursuant to the program established in Title XVIII (Medicare) of the Social Security Act, or pursuant to the program established in Title XIX (Medicaid) of such Act.

g. The student must agree to accept assignment under Section 1842(b)(3)(B)(ii) of the Social Security Act for all services for which payment may be made under Part B of Title XVIII and agree to enter into an appropriate agreement with the state agency that administers the state plan for medical assistance under Title XIX of such Act to provide service to individuals entitled to medical assistance under the plan.

h. The student must complete an application form provided by the Iowa department of public health.

110.16(2) *Site eligibility.* The following requirements must be met, in order for a site to be eligible for placement of PRIMECARRE scholars:

a. The site must be located in a designated health professional shortage area in the state.

b. The site must agree to accept Medicare/Medicaid assignment.

c. The site must have a sliding fee schedule in place that is based upon the ability to pay.

d. The site must have completed a community health services assessment and adopted a long-term developmental plan.

e. The site must be part of a system of care. For the purpose of receiving federal assistance, a system of care is defined as a service continuum that includes comprehensive primary care for all regardless of ability to pay, and appropriate arrangements for secondary and tertiary care, including a referral system and arrangements for call coverage.

f. The site must complete an application form provided by the department.

g. The site must agree to report to the department those health professionals unable to fulfill the contract.

h. The site must meet matching funds requirements consistent with current federal requirements.

110.16(3) *Federal grant requirements.* Use of federal grant dollars for scholarships requires that eligibility be determined as authorized by federal grant requirements.

110.16(4) *Funding limitations.* Scholarships awarded under this program shall be determined annually, based upon the legislative appropriation for the PRIMECARRE initiative and other sources of funds.

110.16(5) *Other sources of funds.* The department of public health shall seek participation in federal programs supporting scholarships for health care providers and shall accept gifts, grants, and other aid or amounts from any person, association, foundation, trust, corporation, governmental agency, or other entity for the purposes of the program.

110.16(6) *Review process.* The department of public health shall establish a review committee which will review all community applications and make recommendations for scholarship awards. The department shall provide the review committee with a methodology for prioritization of federal shortage areas and eligible nonfederal shortage areas to be utilized in the application review process. The department of public health shall provide the review committee with the criteria and scoring methodology to be used in reviewing the applications, in accordance with 641—Chapter 176.

110.16(7) *Contract oversight and administration.* The department of public health shall establish and enforce the terms of the contract, including implementation of any methods, including legal action, that may be necessary to recoup scholarship funds in the event of failure on the part of an individual scholarship recipient to fulfill the terms and conditions of the contract. The department shall take into consideration mitigating circumstances which may prohibit a recipient from fulfilling the recipient's contractual obligation or for whom fulfilling the obligation would cause undue hardship. The department of public health shall also provide for cancellation of contracts for reasonable cause to be determined by the department.

110.16(8) *Appeals.* A community with a denied request for funding may appeal the decision of scholarship awards. The appeal shall be made in writing to the director, Iowa department of public health, within 10 days of the notification date of the grant awards decision. The appeal shall be mailed by certified mail, return receipt requested, or delivered by personal service. The decision of the director of public health becomes the department's final action and shall be sent by certified mail, return receipt requested, or delivered by personal service within 14 days of the receipt of the appeal.

641—110.17 to **110.20** Reserved.

PRIMECARRE PRIMARY CARE PROVIDER LOAN REPAYMENT PROGRAM

641—110.21(135) Purpose. A primary care provider loan repayment program is established to increase the number of health professionals practicing primary care in federally designated health professional shortage areas of the state. If sufficient state funds are available, applications will be considered for loan repayment for primary care providers practicing in communities not located in federally designated shortage areas. Under the program, loan repayment may be made to a recipient for educational loans incurred while completing an accredited health education program directly related to obtaining credentials necessary to practice the recipient's health profession. Notice of the availability of these public funds shall be published in the Iowa Administrative Bulletin in accordance with 641—Chapter 176.

110.21(1) *Health care professional eligibility.* The following requirements must be met by health care professionals in order to be eligible for the program:

a. The status of the health care professional's citizenship must meet requirements of the National Health Service Corps loan repayment program.

b. The health care professional must be licensed or certified to practice in the state of Iowa as a primary care health professional as defined in 110.2(135) and approved by the state for purposes of program priorities and requirements. Physicians must have completed a primary care residency and be board-eligible or board-certified.

c. The health care provider must possess evidence of a contractual agreement to practice full-time at a site in a designated shortage area within the state and approved by the state for the minimum number of years required by federal programs providing support for the program.

d. The health care provider must agree to comply with all contract provisions and the rules and regulations as promulgated by the department.

e. The health care provider must possess a license that is not restricted by a medical regulatory authority of any jurisdiction of the United States, other nations, or territories.

f. The health care professional must be eligible under Section 338B of the Public Health Service Act as amended November 16, 1990, by Public Law 101-597.

g. The health care provider must agree to provide full-time primary health care services at a clinical site in a designated health professional shortage area.

h. The health care provider must agree not to discriminate on the basis of the ability of the individual to pay for such care or on the basis that payment for such care will be made pursuant to the program established in Title XVIII (Medicare) of the Social Security Act, or pursuant to the program established in Title XIX (Medicaid) of such Act.

i. The health care provider must agree to accept assignment under Section 1842(b)(3)(B)(ii) of the Social Security Act for all services for which payment may be made under Part B of Title XVIII and to enter into an appropriate agreement with the state agency that administers the state plan for medical assistance under Title XIX of such Act to provide service to individuals entitled to medical assistance under the plan.

j. The health care provider must complete an application form provided by the Iowa department of public health.

110.21(2) *Site eligibility.* The following requirements must be met in order to be eligible for placement of a health professional qualified under the PRIMECARRE loan repayment program:

a. The site must be located in a designated health professional shortage area in the state.

b. The site must agree to accept Medicare/Medicaid assignment.

c. The site must have a sliding fee schedule in place that is based upon the ability to pay.

d. The site must have completed a community health services assessment and adopted a long-term developmental plan.

e. The site must be part of a system of care. For the purpose of receiving federal assistance, a system of care is defined as a service continuum that includes comprehensive primary care for all regardless of ability to pay, and appropriate arrangements for secondary and tertiary care, including a referral system and arrangements for call coverage.

f. The site must complete an application form provided by the department.

g. The site must agree to report to the department those individuals unable to fulfill the contract.

110.21(3) *Federal grant requirements.* Use of federal grant dollars for loan repayment contracts requires that eligibility be determined as authorized by federal grant requirements.

110.21(4) *Funding limitations.* Loan repayment contracts provided under this program shall be determined annually, based upon the legislative appropriation for the PRIMECARRE initiative and other sources of funds.

110.21(5) *Other sources of funds.* The department of public health shall seek participation in federal programs supporting repayment of loans of health care providers and acceptance of gifts, grants, and other aid or amounts from any person, association, foundation, trust, corporation, governmental agency, or other entity for the purposes of the program.

110.21(6) *Review process.* The department of public health shall establish a review committee which will review all applications and make recommendations for loan repayment contracts. The department shall provide the review committee with a methodology for prioritization of federal shortage areas and eligible nonfederal shortage areas to be utilized in the application review process. The department shall provide the review committee with the criteria and scoring methodology to be used in reviewing the applications, in accordance with 641—Chapter 176. Evaluation criteria will include the applicant's outstanding educational loans and professional credentials.

110.21(7) *Contract oversight and administration.* The department of public health shall establish and enforce the terms of the contract, including implementation of any methods, e.g., legal action, that may be necessary to recoup loan repayment funds in the event of failure on the part of a program recipient to fulfill the terms and conditions of the contract. The department shall take into consideration mitigating circumstances which may prohibit a recipient from fulfilling the recipient's contractual obligation or for whom fulfilling the obligation would cause undue hardship. The department of public health shall also provide for cancellation of contracts for reasonable cause to be determined by the department.

110.21(8) *Appeals.* Applicants with a denied request for loan repayment funding may appeal the decision of loan repayment awards. The appeal shall be made in writing to the director, Iowa department of public health, within 10 days of the notification date of the loan repayment awards decision. The appeal

shall be mailed by certified mail, return receipt requested, or delivered by personal service. The decision of the director of public health becomes the department's final action and shall be sent by certified mail, return receipt requested, or delivered by personal service within 14 days of the receipt of the appeal.

These rules are intended to implement Iowa Code section 135.107.

[Filed 4/26/90, Notice 11/15/89—published 5/16/90, effective 6/20/90]
[Filed emergency 8/3/90 after Notice 6/27/90—published 8/22/90, effective 8/3/90]
[Filed 11/9/90, Notice 9/5/90—published 11/28/90, effective 1/2/91]
[Filed emergency 1/20/95 after Notice 11/23/94—published 2/15/95, effective 1/27/95]

CHAPTER 111
IOWA NEEDS NURSES NOW INFRASTRUCTURE ACCOUNT

641—111.1(135) Scope and purpose. The Iowa needs nurses now infrastructure account is established to award grants for clinical simulators, laboratory facilities, health information technology and other infrastructure to improve the education of nurses and nurse educators in the state and to enhance the clinical experience for nurses. Moneys in the account shall consist of moneys appropriated or allocated for deposit in or received by the fund or the account and specifically dedicated to the Iowa needs nurses now infrastructure account for the purposes of the account. Grants from the account may not be used for the construction of buildings. Grants awarded shall authorize the use of a reasonable portion of the grant moneys for training in the use of the infrastructure purchased with the grant moneys. These rules shall be implemented only to the extent funding is available.
[**ARC 9247B**, IAB 12/1/10, effective 1/5/11]

641—111.2(135) Definitions. For the purposes of these rules, the following definitions shall apply:

"Department" means the Iowa department of public health.

"Iowa Needs Nurses Now Coalition" means the coalition of nurse, health, education and business leaders who understand that nurses are important to families and communities.
[**ARC 9247B**, IAB 12/1/10, effective 1/5/11]

641—111.3(135) Eligibility and criteria. To be eligible for an Iowa needs nurses now infrastructure grant, an organization shall:

111.3(1) Be an educational institution with prelicensure nursing education programs approved by the Iowa board of nursing.

111.3(2) Address the long-term sustainability of the infrastructure project to be funded through the grant.
[**ARC 9247B**, IAB 12/1/10, effective 1/5/11]

641—111.4(135) Review process.

111.4(1) The department shall follow requirements for competitive selection contained in 641—Chapter 176 in awarding grants pursuant to this chapter.

111.4(2) The department shall establish a request for proposal and application process for organizations eligible to receive funding. The review process and review criteria shall be described in the request for proposal.

111.4(3) The department shall establish a committee to review proposals and make recommendations to the department. The committee membership may include representation from the following:

a. Iowa board of nursing;

b. Iowa Nurses Association;

c. Iowa Needs Nurses Now Coalition; and

d. Iowa department of education.

111.4(4) The department shall consider financial need of the applying entity as a criterion in determining grant awards.

111.4(5) The department shall consider geographic areas where there is limited access to clinical facilities due to geographic location or limited patient census to support eligible students as a criterion in determining grant awards.

111.4(6) The department shall consider collaboration between education programs and clinical facilities as a criterion in determining grant awards.
[**ARC 9247B**, IAB 12/1/10, effective 1/5/11]

641—111.5(135) Performance standards. A grantee shall provide clinical experiences for nurses and nurse educators that:

1. Expand the capacity of its nursing program in terms of opportunities for increased learning by the students completing the program.

2. Offer educational opportunities in geographic areas where there is limited access to clinical facilities due to geographic location or limited patient census to support eligible students.

3. Enhance learning opportunities for the students in the nursing program.

[**ARC 9247B**, IAB 12/1/10, effective 1/5/11]

641—111.6(135) Appeals. An applicant may appeal the denial of a properly submitted grant application. Appeals shall be governed by rule 641—176.8(135,17A).

[**ARC 9247B**, IAB 12/1/10, effective 1/5/11]

These rules are intended to implement 2009 Iowa Code Supplement section 135.175(5) as amended by 2010 Iowa Acts, Senate File 2384, section 5.

[Filed ARC 9247B (Notice ARC 9096B, IAB 9/22/10), IAB 12/1/10, effective 1/5/11]

CHAPTER 112
BIOLOGICAL AGENT RISK ASSESSMENT

641—112.1(135) Purpose. The purpose of a statewide biological agent risk assessment is to protect the citizens of Iowa from exposure to biological agents which are or have the potential to be biological weapons. In order to protect the public health, the department is charged with identifying sources, locations, safety and security of select biological agents.

641—112.2(135) Definitions. For the purposes of these rules, the following definitions shall apply:

"Biological agent" means any microorganism (including bacteria, viruses, fungi, rickettsiae or protozoa), pathogen, or infectious substance, toxin, or any naturally occurring, bioengineered or synthesized component of any such microorganism, pathogen or infectious substance, whatever its origin or method of production.

"Biosecurity council" or *"council"* means a council established by the director to advise the department on biosecurity issues and to recommend guidelines to protect the citizens of Iowa from exposure to select biological agents.

"CDC" means the Centers for Disease Control and Prevention.

"Department" means the Iowa department of public health.

"Director" means the director of the Iowa department of public health.

"DOJ" means the federal Department of Justice.

"EMD" means the emergency management division of the department of public defense.

"FBI" means Federal Bureau of Investigation.

"HHS" means the federal Department of Health and Human Services.

"Laboratory" means a facility for the examination of biological, microbiological, serological, chemical, immunohematological, hematological, biophysical, cytological or pathological materials or other materials derived from humans, animals, or plants to provide information for the diagnosis, prevention or treatment of any disease or impairment of, or for the assessment of the health of, humans, animals, or plants.

"Lethality" or *"L"* means the relative power and degree of pathogenicity possessed by organisms to produce disease.

"Select biological agent" means a biological agent identified by the director, upon recommendation from the biosecurity council, for heightened monitoring and security, including but not limited to any biological agent that is listed as a Category A, B, or C biological agent by the Centers for Disease Control and Prevention, any agent identified as a select agent in the Code of Federal Regulations, Title 42, Part 72, Appendix A, and any biological agent identified by the United States Army Medical Research Institute of Infectious Diseases as appropriate for a heightened level of monitoring and security.

"Suitability" or *"S"* means suitability for weaponization.

"Transmissibility" or *"T"* means degree of contagion.

"USAMRIID" means the United States Army Medical Research Institute of Infectious Diseases.

"Weaponization" means manipulation of a biological agent to increase the potential for use as a weapon.

641—112.3(135) Biosecurity council established. The director shall appoint a biosecurity council to advise the department on biosecurity issues and to recommend guidelines to protect the citizens of Iowa from exposure to select biological agents.

112.3(1) The council shall, at a minimum, consist of the following members:

a. The director of the department of public health;

b. The governor's homeland security advisor;

c. The director of the University of Iowa Hygienic Laboratory;

d. A representative from the FBI as made available by the director of the FBI or a representative of the U.S. Secret Service as made available by the director of the U.S. Secret Service;

e. A representative appointed by the Iowa adjutant general;

f. A representative from the Iowa attorney general's office;

g. The medical director of the department of public health;

h. The executive director of the office of disease epidemiology and disaster preparedness, department of public health;

i. A microbiologist at the master's or doctorate level who has expertise in human microbiology;

j. A microbiologist at the master's or doctorate level who has expertise in zoonosis;

k. A biological safety professional; and

l. The emergency management division administrator.

112.3(2) The council shall make recommendations to the department on classification of select biological agents, select biological agent risk assessment guidelines, and security guidelines.

112.3(3) Security guidelines shall be consistent with applicable state and federal laws, including but not limited to specific antiterrorism regulations of HHS and DOJ.

641—112.4(135) Biological agent risk assessment.

112.4(1) *Questionnaire.*

a. Duty to complete and submit. Any laboratory, clinic, research facility, commercial enterprise, or other entity which possesses select biological agents shall complete and submit to EMD a biological agent risk assessment questionnaire on an annual basis or more frequently as requested by EMD. The questionnaire shall identify the select biological agents possessed and shall contain such other information as required by the department and EMD.

b. Purpose and use. The questionnaires shall be used in the development of the critical asset protection plan prepared pursuant to Iowa Code section 29C.8. EMD shall provide the department with the completed questionnaires for the purpose of preparing relevant security guidelines. The department shall not redisseminate the information contained in the questionnaires.

112.4(2) *Assessment criteria.* The criteria for assessing the risk of a select biological agent shall be based on, but not limited to, current CDC guidelines, recommendations from USAMRIID, recommendations from the biosecurity council, and this subrule. The biosecurity council may modify the criteria based on new scientific information, treatments, or public perceptions, or any combination thereof.

a. Biological agent rating criteria. Biological agents shall be rated by the department based on the following three categories:

(1) Transmissiblity (T). 0 = nontransmissible, 1 = transmissible only by injection, sexual interface or bite, 2 = transmissible by ingestion, 3 = transmissible by air or touch.

(2) Lethality (L). 0 = nonlethal, 1 = 0-25 percent mortality, 2 = 26-50 percent mortality, 3 = 51-100 percent mortality.

(3) Suitability for or degree of weaponization (S). 0 = not suitable, 1 = suitable but not modified, 2 = modified for antibiotic resistance or improved environmental resilience, 3 = modified and packaged for effective delivery on a mass scale.

b. The final rating for a biological agent is determined by adding the score the biological agent received in each of the three categories (T + L + S = biological agent rating).

112.4(3) *On-site examination.*

a. Notification. The department or its designee may conduct an on-site examination of any premises containing select biological agents. Prior to conducting the on-site examination, the department shall notify the owner or person in charge of the premises.

b. Examination. An on-site examination shall include each of the following components:

(1) A review of laboratory safety and security policies and procedures;

(2) A review of external and internal access to the premises;

(3) A review of access controls to areas where select biological agents are used and stored;

(4) A review of employee, student and visitor access to the premises, including the identification required to access the premises and the method of recording access to the premises;

(5) A review of background and security clearance measures implemented;

(6) A review of the screening process for packages brought into or taken out of the premises;

(7) A review of the emergency plan;

(8) A review of appropriate biocontainment within a laboratory;

(9) A review of the training and knowledge of research staff;

(10) A review of the process for reporting and investigating breach-of-security incidents;

(11) A review of disposal procedures; and

(12) A tour of the premises to view access security, select biological agent locations, storage, inventory, records, coding and database procedures.

c. Administrative search warrant. If the owner or person in charge of the premises refuses the department's employee or designee admittance or if the department's employee or designee is not permitted to conduct a full examination, the department may obtain an administrative search warrant under Iowa Code section 808.14.

112.4(4) *Security guidelines.* After a biological agent risk assessment questionnaire has been completed and the on-site examination has been conducted, the department shall provide the entity with a biological agent risk assessment report and security guidelines. A select biological agent which is listed as a CDC Category A biological agent or as determined by the biosecurity council shall be maintained in accordance with maximum security guidelines as established by the biosecurity council and the director.

112.4(5) *Confidentiality.* The biological agent risk assessment questionnaire, the biological agent risk report and security guidelines, and any other information if it relates to the imminent threat of death, disease, biological malfunction in a human, animal, plant or other living thing, deterioration of food, water, equipment, supplies, or a deleterious alteration of the environment provided to or by EMD or the department pursuant to this chapter may be considered critical asset protection plan information and may be maintained as confidential pursuant to Iowa Code section 22.7(43).

641—112.5(135) Requests for biological agent information. A laboratory, clinic, research facility, commercial enterprise, or other entity which possesses select biological agents shall respond to written requests from the department regarding the presence, location, and security of biological agents within 30 days of the request. In the event of a disaster emergency, a laboratory, clinic, research facility, commercial enterprise, or other entity which possesses select biological agents shall immediately respond to a request from the department or its designee regarding the presence, location, and security of biological agents.

641—112.6(135) Exceptions.

112.6(1) The requirements of this chapter are not applicable to hospital laboratories which possess select biological agents solely as a result of a patient culture provided that the culture is destroyed within 14 days after referral to and confirmation by the University of Iowa Hygienic Laboratory or other laboratory approved by the council.

112.6(2) The requirements of this chapter are not applicable to a person who detects a biological agent in a clinical or environmental sample for the purpose of diagnosing disease, epidemiological surveillance, exposure assessment, reference, verification or proficiency testing, and who discards the agent within 14 calendar days. If a biological agent is kept for more than 14 calendar days, the laboratory shall provide written notice to the department identifying the agent and reason for continued or extended possession.

These rules are intended to implement Iowa Code Supplement section 135.11(28).

[Filed 7/18/02, Notice 5/29/02—published 8/7/02, effective 9/11/02]

CHAPTER 113
PUBLIC HEALTH RESPONSE TEAMS

641—113.1(135) Definitions. For purposes of this chapter, the following definitions shall apply:

"Defend" means that the office of the Iowa attorney general shall provide a public health response team member with legal representation at no cost to the public health response team member.

"Department" means the Iowa department of public health.

"Director" means the director of the Iowa department of public health.

"Disaster medical assistance team" or *"DMAT"* means a public health response team that is sponsored by a sponsor agency and approved by the department to provide medical assistance in the event of a disaster or threatened disaster or other incident as defined in Iowa Code section 135.143.

"Environmental health response team" or *"EHRT"* means a public health response team that is sponsored and approved by the department to provide environmental health expertise and assistance in the event of a disaster or threatened disaster or other incident defined in Iowa Code section 135.143.

"Indemnify" means that the state of Iowa shall pay all sums that a public health response team member is legally obligated to pay as damages because of any claim made against the public health response team member which arises out of the provision of direct medical care or other support services rendered or which should have been rendered during a disaster, threatened disaster, or other incident defined in Iowa Code section 135.143, or arising out of a training exercise to prepare for a disaster or other incident defined in Iowa Code section 135.143.

"Iowa mortuary operational response team" or *"IMORT"* means a public health response team that is sponsored and approved by the department to provide decedent care in the event of a mass fatality disaster or threatened disaster or other incident defined in Iowa Code section 135.143.

"Logistical support response team" or *"LSRT"* means a public health response team that is sponsored and approved by the department to provide logistical support and assistance in the event of a disaster or threatened disaster or other incident defined in Iowa Code section 135.143.

"Public health response team" or *"PHRT"* means a team of professionals, including licensed health care providers, nonmedical professionals skilled and trained in disaster or emergency response, and public health practitioners, that is sponsored by the department, a hospital or other entity and approved by the department to provide assistance in the event of a disaster or threatened disaster or other incident defined in Iowa Code section 135.143. "Public health response team" shall include disaster medical assistance teams, an environmental health response team, a logistical support response team, the Iowa mortuary operational response team and other teams established and approved upon written order of the director to supplement and support disrupted or overburdened local medical and public health personnel, hospitals, and resources.

"Public health response team member" or *"PHRT member"* means an individual who has registered with the department and has received approval from the department to serve on a public health response team.

"Sponsor agreement" means a signed agreement between a sponsor agency and the department which defines the terms and conditions under which the agency shall sponsor a public health response team.

[**ARC 0578C**, IAB 2/6/13, effective 3/13/13]

641—113.2(135) Purpose.

113.2(1) The department, through the division of acute disease prevention and emergency response, center for disaster operations and response, shall establish, register, and approve public health response teams to supplement and support disrupted or overburdened local medical and public health personnel, hospitals, and resources in the event of a disaster or threatened disaster or other incident as defined in Iowa Code section 135.143. The primary purpose of the public health response teams is to respond to Iowa incidents and to provide support for Iowa medical and public health personnel, hospitals, and resources. A public health response team may also be requested to respond to an out-of-state disaster or emergency pursuant to the Emergency Management Assistance Compact at Iowa Code section 29C.21.

113.2(2) PHRTs shall be established, registered and approved pursuant to this chapter. Additional PHRTs may be established, registered and approved as necessary upon written order of the director.
[**ARC 0578C**, IAB 2/6/13, effective 3/13/13]

641—113.3(135) Sponsor agency.

113.3(1) *Sponsor agency approval.* A hospital or other entity may apply to the department to be a sponsor agency of a public health response team. The applicant shall apply on a form approved by the department and shall provide all information requested by the department. The department may approve an application when the department is satisfied that the sponsor agency will operate the PHRT in compliance with Iowa Code section 135.143 and this chapter. Upon approval of the application, the department and the sponsor agency shall execute a sponsor agreement which shall provide that the agency is registered with the department and has been approved to sponsor a public health response team. The sponsor agreement shall also include the effective date of the approval and the terms and conditions of approval.

113.3(2) *Sponsor agency denial and revocation.* The department may deny approval to an applicant sponsor agency or may revoke a sponsor agency's approval if the department determines that the sponsor agency has violated or failed to comply with Iowa Code section 135.143 or this chapter, any term or condition contained in the sponsor agreement, any operational procedure, or state or federal law. The department shall notify the applicant or sponsor agency of the department's decision in writing by certified mail, return receipt requested. In the event an applicant or a sponsor agency is dissatisfied with the department's decision, the applicant or sponsor agency may submit a request for reconsideration with the division director. Such request shall be delivered by certified mail, return receipt requested, within 20 days of the date of the denial or revocation notification, to Division Director, Division of Acute Disease Prevention and Emergency Response, Lucas State Office Building, 321 E. 12th Street, Des Moines, Iowa 50319. The division director shall review the matter and issue a written decision within 20 days of receipt of the request. The division director's decision shall be final agency action. This appeal process does not constitute a contested case proceeding as defined in Iowa Code chapter 17A.

641—113.4(135) Public health response team members.

113.4(1) *Registration and approval.* An individual may apply to the department through a sponsor agency to be a public health response team member. The applicant shall apply on a form approved by the department and shall provide all information requested by the department and sponsor agency. The department shall register and approve an individual to serve as a PHRT member when the department is satisfied that the individual satisfies the requirements of this chapter and will perform on a PHRT in compliance with Iowa Code section 135.143 and this chapter. Upon registration and approval of an individual, the department shall provide the individual with written notification that the individual is registered with the department and has been approved to serve on a public health response team. The written notification shall also include the effective date of the approval and the terms and conditions of approval.

113.4(2) *Denial and revocation.* The department may deny approval to an individual or may revoke an individual's approval if the department determines that the individual has violated or failed to comply with Iowa Code section 135.143 or this chapter, any term or condition contained in the written approval notification from the department, any operational procedure, or state or federal law, or has exposed or may expose the state to undue risk. The department shall notify the individual of the department's decision in writing by certified mail, return receipt requested. In the event an individual is dissatisfied with the department's decision, the individual may submit a request for reconsideration with the division director. Such request shall be delivered by certified mail, return receipt requested, within 20 days of the date of the denial or revocation notification, to Division Director, Division of Acute Disease Prevention and Emergency Response, Lucas State Office Building, 321 E. 12th Street, Des Moines Iowa 50319. The division director shall review the matter and issue a written decision within 20 days of receipt of

the request. The division director's decision shall be final agency action. This appeal process does not constitute a contested case proceeding as defined in Iowa Code chapter 17A.

113.4(3) *Effect of revocation.* If the department revokes a public health response team member's approval, the action shall revoke future eligibility, but shall not negate defense and indemnification coverage or other protection for covered acts or omissions which occurred during the effective date of approval.

641—113.5(135) Public health response team.

113.5(1) *General requirements.*

a. An entity may make application to the department to be a sponsor agency of a PHRT pursuant to subrule 113.3(1). An individual may make application to the department to be a member of a PHRT pursuant to subrule 113.4(1).

b. The department, in conjunction with the sponsor agencies, shall establish the Iowa Volunteer Public Health Response Team Operational Procedures Manual. The operational procedures shall be in writing and shall be provided to each PHRT member. All PHRT members and sponsor agencies shall follow the PHRT operational procedures as established by the department. The Iowa Volunteer Public Health Response Team Operational Procedures Manual is available through the Iowa Department of Public Health, Center for Disaster Operations and Response, Lucas State Office Building, Des Moines, Iowa 50319-0075.

c. If the department notifies a PHRT member or sponsor agency of a violation of Iowa Code section 135.143, this chapter, or an operational procedure, the PHRT member or sponsor agency shall correct the deficiency or violation identified by the department within a time frame determined by the department. If a PHRT member or sponsor agency fails to correct a deficiency or violation within the time frame identified by the department, or if the deficiency or violation constitutes an immediate danger to the public health, safety, or welfare, the department may initiate action to revoke approval pursuant to subrule 113.3(2) or 113.4(2).

113.5(2) *Team composition.*

a. A PHRT shall be comprised of health care professionals and administrative personnel as identified in the Iowa Volunteer Public Health Response Team Operational Procedures Manual.

b. The sponsor agency for each team shall be responsible for maintaining adequate staffing.

113.5(3) *Licensure and educational requirements.*

a. Each PHRT member shall hold and maintain an active unrestricted license, registration, or certification to practice in Iowa in the member's respective medical or health care profession.

b. Each PHRT member shall complete required training as listed in the Iowa Volunteer Public Health Response Team Operational Procedures Manual, including training specified in respective team annexes.

c. In addition to the requirements in paragraph 113.5(3)*"b,"* the PHRT leadership shall complete training as specified in the team annex to the Iowa Volunteer Public Health Response Team Operational Procedures Manual.

d. A sponsor agency shall provide specific position training to PHRT members as determined to be necessary by the sponsor agency and as approved by the department.

e. A sponsor agency, in conjunction with the department, shall develop and implement training exercises to test the team's notification process, deployment readiness, and response capabilities.

f. The sponsor agency shall be responsible for documenting each PHRT member's completion of required training.

113.5(4) *Deployment and standdown.*

a. PHRTs shall prepare to deploy within two to four hours of notification by the department. PHRTs shall not self-deploy and shall not be covered by the provisions of Iowa Code section 135.143 and this chapter if the PHRTs self-deploy or are deployed by another agency or entity.

b. On-call team schedules shall be established and distributed by the department and shall be followed by the PHRTs and sponsor agencies.

c. Deployment and standdown procedures are outlined in the Iowa Volunteer Public Health Response Team Operational Procedures Manual and shall be followed by all PHRT members.
[**ARC 0578C**, IAB 2/6/13, effective 3/13/13]

641—113.6(135) Legal and other protections. A public health response team member acting pursuant to Iowa Code section 135.143 and this chapter shall be considered an employee of the state under Iowa Code section 29C.21 and chapter 669, shall be afforded protection as an employee of the state under Iowa Code section 669.21 whom the state shall defend and indemnify, and shall be considered an employee of the state for purposes of workers' compensation, disability, and death benefits, provided that the member has done all of the following:

1. Registered with and received approval from the department pursuant to subrule 113.4(1) to serve on a public health response team.

2. Provided direct medical care or other support services during a disaster, threatened disaster, or other incident described in Iowa Code section 135.143(1); or participated in a training exercise to prepare for a disaster or other incident described in Iowa Code section 135.143(1).
[**ARC 0578C**, IAB 2/6/13, effective 3/13/13]

641—113.7(135) Reporting requirements and duties.

113.7(1) Upon obtaining knowledge or becoming aware of any injury allegedly arising out of the negligent rendering of, or the negligent failure to render, medical or other services as a public health response team member, such member or the member's sponsor agency shall provide written notice to the department, as soon as practicable, containing to the extent obtainable the circumstance of the alleged injury, the name and address of the injured, and any other relevant information.

113.7(2) Upon obtaining knowledge or becoming aware of any injury as defined in subrule 113.7(1), a public health response team member shall promptly take all reasonable steps to prevent further or additional injury from the same or similar circumstances, situations, or conditions.

113.7(3) A public health response team member shall immediately notify the Iowa Department of Justice, Special Litigation Division, Hoover State Office Building, Des Moines, Iowa 50319, of service or receipt of an original petition, suit, or claim seeking damage from the public health response team member related to participation on a public health response team.

113.7(4) Each public health response team member shall fully cooperate with the state in the defense of any claim or suit related to participation on a public health response team, including attending hearings, depositions, and trials and assisting in securing and giving evidence, responding to discovery and ensuring the attendance of witnesses.

113.7(5) Each public health response team member shall accept financial responsibility for personal expenses and costs incurred in the defense of any claim or suit related to participation on a public health response team, including travel, meals, and compensation for time and lost practice.
[**ARC 0578C**, IAB 2/6/13, effective 3/13/13]

These rules are intended to implement Iowa Code section 135.143.

[Filed 1/10/07, Notice 11/22/06—published 1/31/07, effective 3/7/07]
[Filed ARC 0578C (Notice ARC 0474C, IAB 11/28/12), IAB 2/6/13, effective 3/13/13]

CHAPTER 114
PREPAREDNESS ADVISORY COMMITTEE

641—114.1(135) Definitions. For the purpose of these rules, the following definitions shall apply:

"Chairperson" means the chairperson of the preparedness advisory committee, who has been elected by a majority of advisory committee members.

"Department" means the Iowa department of public health.

"Designee" means the individual designated by the director.

"Director" means the director of public health.

"PAC" means the preparedness advisory committee.

"Quorum" means a simple majority of the voting membership of the preparedness advisory committee.

"Regions" means the six multicounty geographic areas of the state as identified by the preparedness advisory committee or the department to provide support services to the public health and hospital preparedness programs.

641—114.2(135) Purpose. The preparedness advisory committee (PAC) shall provide technical assistance and make recommendations for the planning and implementation of the public health emergency preparedness program for the department. The committee shall advise the department on matters of policy, plan development, funding allocations, and coordination of state, regional and local entities that are responsible for promoting and protecting the health and safety of all Iowans prior to, during, or after a public health emergency or disaster.

641—114.3(135) Appointment.

114.3(1) The voting members of the PAC shall be appointed by the director or designee as nominated by the member organizations.

114.3(2) The appointments shall be for three-year staggered terms which shall expire on June 30.

114.3(3) Vacancies shall be filled in the same manner in which the original appointments were made for the balance of the unexpired term.

114.3(4) Absences.

a. If a member is unable to attend a scheduled meeting, an alternate may be designated by the member organization to serve in the absence of the regular member.

b. Three consecutive unexcused absences shall be grounds for the director or designee to request nomination of an alternate representative to fill the position.

c. The chairperson of the preparedness advisory committee shall be charged with providing notification of absences to the department.

641—114.4(135) Membership.

114.4(1) The voting membership of the PAC shall consist of one representative nominated by each of the following organizations and approved by the director or the director's designee:

a. American Red Cross,

b. Indian Health Services,

c. Upper Midwest Center for Public Health Preparedness,

d. Center for Food Security and Public Health,

e. Iowa Counties Public Health Association,

f. Iowa Environmental Health Association,

g. Iowa Emergency Management Association,

h. Iowa Emergency Medical Services Association,

i. Iowa Hospital Association,

j. Iowa Medical Society,

k. Iowa/Nebraska Primary Care Association,

l. Iowa Nurses Association,

m. Iowa Osteopathic Medical Association,
n. Iowa Pharmacy Association,
o. Iowa Poison Control Center,
p. Iowa National Guard,
q. University Hygienic Laboratory,
r. Veterans Health Administration,
s. Safeguard Iowa Partnership,
t. School Administrators of Iowa, and
u. A mental health association.

114.4(2) The preparedness advisory committee shall also include as voting members:
a. One public health representative from each of the six public health preparedness regions, and
b. One hospital representative from each of the six health care preparedness regions.

114.4(3) Contributions and representation to the PAC shall consist of the following entities:
a. The Iowa department of public health,
b. The Iowa department of human services,
c. The Iowa homeland security and emergency management division,
d. The Iowa department of natural resources,
e. The Iowa department of agriculture and land stewardship,
f. The Iowa department of elder affairs, and
g. The Iowa department of education.

641—114.5(135) Officers.

114.5(1) Officers of the PAC shall consist of a chairperson and a vice chairperson, who shall be elected at the first meeting of each fiscal year.
a. Vacancies in the office of chairperson shall be filled by elevation of the vice chairperson.
b. Vacancies in the office of vice chairperson shall be filled by election at the next meeting after the vacancy occurs.

114.5(2) Duties of officers.
a. The chairperson shall:
(1) Preside at all meetings of the advisory committee,
(2) Appoint such subcommittees as deemed necessary, and
(3) Ratify the chairperson of each subcommittee following elections.
b. The vice chairperson shall:
(1) Perform the duties of the chairperson if the chairperson is absent or unable to act. When so acting, the vice chairperson shall have all the powers of and be subject to all restrictions upon the chairperson.
(2) Perform such other duties as may be assigned by the chairperson.

641—114.6(135) Meetings.

114.6(1) The PAC shall establish a meeting schedule on an annual basis to conduct its business.
a. Meetings may be scheduled as business requires, but notice to members must be at least five working days prior to the meeting date unless action is required by the PAC on an emergency basis.
b. A four-week notice is encouraged to accommodate the schedules of professional members.

114.6(2) Robert's Rules of Order shall govern all meetings.

641—114.7(135) Subcommittees.

114.7(1) The PAC may designate one or more subcommittees pertinent to the priorities and activities of the public health and hospital preparedness program. Subcommittee members shall perform such duties as may be deemed necessary.
a. Each subcommittee shall include one voting member of the PAC.
b. The chairperson of each subcommittee shall be elected by the subcommittee membership and ratified by the PAC.

114.7(2) The designated subcommittees shall include but are not limited to:

a. Planning,

b. Epidemiology,

c. Lab,

d. Communications/information technology,

e. Risk communication, and

f. Education/exercises.

114.7(3) The PAC may establish ad hoc subcommittees for a specified time of duration for special projects or where special expertise is needed.

641—114.8(135) Expenses of preparedness advisory committee voting members. The following may be considered necessary expenses for reimbursement of PAC members when incurred on behalf of advisory committee business and are subject to established state reimbursement rates:

1. Reimbursement for travel in a private car.
2. Actual lodging and meal expenses, including sales tax on lodging and meals.
3. Actual expense of public transportation.

641—114.9(135) Gender balance. All advisory committees of the department appointed by the governor, director or designee, if not otherwise provided by law, shall be gender-balanced.

These rules are intended to implement Iowa Code chapter 135.

[Filed 7/10/08, Notice 5/21/08—published 7/30/08, effective 9/3/08]

CHAPTERS 115 to 120
Reserved

CHAPTER 121
STANDARD FOR IMPACT RESISTANCE AND METHOD OF TESTING
[Prior to 7/29/87, Health Department[470] Ch 121]
Rescinded IAB 6/3/09, effective 7/8/09

CHAPTERS 122 and 123
Reserved

CHAPTER 124
INTERAGENCY COORDINATING COUNCIL FOR THE STATE MEDICAL EXAMINER

641—124.1(691) Purpose. The purpose of the interagency coordinating council for the state medical examiner is to provide a venue for the effective coordination of the functions and operations of the office of the state medical examiner with the needs and interests of the department of public safety and the department of public health, with input and guidance from the governor's office.

641—124.2(691) Membership. Members shall include the chief state medical examiner or, when the state medical examiner is not available, the deputy state medical examiner, the commissioner of public safety or the commissioner's designee, the director of public health or the director's designee, and the governor or the governor's designee.

641—124.3(691) Meetings.

124.3(1) The interagency coordinating council shall schedule two meetings per year to be held at the office of the director of public health.

124.3(2) Meetings may be scheduled more frequently or less frequently depending upon the circumstances and the need for consultation.

124.3(3) Meetings may be canceled by any member with the agreement of the other members.

124.3(4) All meetings are open to the public in accordance with the open meetings law, Iowa Code chapter 21.

[**ARC 8229B**, IAB 10/7/09, effective 11/11/09]

641—124.4(691) Duties. The interagency coordinating council shall perform the following duties:

124.4(1) Provide a venue to coordinate the functions and operations of the office of the state medical examiner with the department of public safety and the department of public health in order to better serve the needs of the citizens of Iowa.

124.4(2) Provide to and receive from the governor's office updated information relevant to the mission of the state medical examiner's office.

124.4(3) Discuss legislative and budgetary decisions that may impact the functions and operations of one, two, or all three agencies represented by the interagency coordinating council.

641—124.5(691) Minutes. The office of the state medical examiner shall keep minutes of all meetings showing the date, time, place, members present, and the general topics presented.

124.5(1) The minutes shall be provided to the members of the interagency coordinating council prior to the next scheduled meeting.

124.5(2) The minutes shall be available at the office of the state medical examiner for public inspection Monday through Friday from 8:30 a.m. to 4:30 p.m.

These rules are intended to implement Iowa Code section 691.6B.

[Filed 1/10/08, Notice 11/21/07—published 1/30/08, effective 3/5/08]

[Filed ARC 8229B (Notice ARC 7968B, IAB 7/15/09), IAB 10/7/09, effective 11/11/09]

CHAPTER 125
ADVISORY COUNCIL FOR THE STATE MEDICAL EXAMINER

641—125.1(691) Purpose. The purposes of the advisory council for the state medical examiner are to provide guidance concerning medicolegal death investigation for the state of Iowa, facilitate optimal relationships between the state and county medical examiners and other agencies involved in death investigation, and provide a venue for the exchange of information vital to the continued operations of the Iowa office of the state medical examiner.

641—125.2(691) Membership. Members shall include representatives from agencies and organizations that are directly involved with the office of the state medical examiner and medicolegal death investigation in the state of Iowa.

125.2(1) The advisory council shall include but not be limited to a representative from the following agencies:

a. The office of the attorney general;
b. The Iowa County Attorneys Association;
c. The Iowa Medical Society;
d. The Iowa Association of Pathologists;
e. The Iowa Association of County Medical Examiners;
f. The department of public safety;
g. The department of public health;
h. The Iowa Emergency Medical Services Association;
i. The Iowa Funeral Directors Association;
j. The University of Iowa department of pathology;
k. The state public defender's office; and
l. The office of the state medical examiner.

125.2(2) Each specific organization shall designate a representative to serve on the advisory council. Representatives shall be approved by the chief state medical examiner in consultation with the director of public health. Members may be selected from other organizations not specified in subrule 125.2(1) at the discretion of the chief state medical examiner.

125.2(3) The chair and presiding member of the council shall be the chief state medical examiner or a designee from the office of the state medical examiner.

641—125.3(691) Meetings. The advisory council will hold a meeting at the Iowa laboratory facility in Ankeny at least two times per year or on a more frequent basis as deemed necessary by the chief state medical examiner with approval of a majority of members of the council.

125.3(1) Meetings may be conducted via the Iowa Communications Network (ICN) for members who cannot physically be present at the laboratory facilities.

125.3(2) Meetings may be conducted by telephone at the discretion of the chief state medical examiner depending upon the complexity of the agenda.

125.3(3) Notice of routine meetings and agenda will be made available to the members a minimum of five working days prior to the meeting.

125.3(4) The chief state medical examiner or any member of the council may ask for a special meeting to discuss emergent issues within a 24-hour time period.

125.3(5) All meetings are open to the public in accordance with the open meetings law, Iowa Code chapter 21.

125.3(6) The operation of council meetings will be governed by the following rules of procedure:

a. A simple majority will be defined as a quorum, but the chair may choose to continue with the meeting even if a quorum is not present.

b. A course of action for topics under debate will be agreed upon by a simple majority vote of the members present at the meeting.

c. Any council member or a designated replacement who is unable to attend a meeting will notify the office of the state medical examiner at least 24 hours prior to the start of a regularly scheduled meeting; a meeting may be canceled if attendance is expected to be low.
[**ARC 8229B**, IAB 10/7/09, effective 11/11/09]

641—125.4(691) Duties. The advisory council shall perform the following duties:

125.4(1) Provide information to council members regarding the current operations and functions of the office of the state medical examiner.

125.4(2) Provide information to council members regarding any legislative or budgetary decisions that impact the office of the state medical examiner.

125.4(3) Elicit council members' suggestions and recommendations to improve the overall operations of the office of the state medical examiner.

641—125.5(691) Minutes. The advisory council shall keep minutes of all its meetings showing the date, time, place, members present, members absent, and the general topics discussed.

125.5(1) The minutes shall reflect the actions agreed upon by the members for topics requiring the members' input or consensus.

125.5(2) If a meeting is convened within a 24-hour time period to discuss emergent issues, then the minutes shall reflect the emergent nature of this meeting.

125.5(3) If a meeting is conducted via telephone, then the minutes shall reflect the reason for the use of this method of communication.

125.5(4) The minutes shall be available at the office of the state medical examiner for inspection Monday through Friday from 8:30 a.m. to 4:30 p.m.

These rules are intended to implement Iowa Code section 691.6C.

[Filed 1/10/08, Notice 11/21/07—published 1/30/08, effective 3/5/08]
[Filed ARC 8229B (Notice ARC 7968B, IAB 7/15/09), IAB 10/7/09, effective 11/11/09]

CHAPTER 126
STATE MEDICAL EXAMINER

[Prior to 4/20/88, see Medical Examiner, State[566] Ch 1]
[Prior to 6/30/99, see Public Safety Department[661] Ch 21]

641—126.1(144,331,691) Definitions.

"Autopsy" means the external and internal postmortem examination of a deceased person.

"County of appointment" means the county which requests a medical examiner to conduct an investigation, perform or order an autopsy, or prepare a report(s) in a death investigation case. The request may be authorized by the county attorney or the county medical examiner. The county of appointment shall be the county in which the death occurred.

641—126.2(691) Medical examiner coverage. Rescinded IAB 12/12/01, effective 1/16/02.

641—126.3(691) Fees for autopsies and related services and reimbursement for related expenses. Autopsies performed by the state medical examiner are provided on a fee-for-service basis. Costs of autopsies and related services and expenses are the responsibility of the county of appointment. The county of residence of the deceased shall reimburse the county of appointment.

126.3(1) *Fee schedule.* The fees collected under this subrule shall be considered repayment receipts as defined in Iowa Code section 8.2.

a. The following fees shall apply to autopsies conducted by the state medical examiner:

Autopsy $1400
Copies of reports $20

EXCEPTIONS: A copy of the autopsy report is automatically sent to the county medical examiner and to the county attorney without fee. A single copy of an autopsy report may be provided to the immediate next of kin of the deceased without fee. Copies of autopsy reports may be provided to public officials and physicians of record for official purposes without fee.

b. The following fee is for time spent reviewing case materials, preparing for deposition or court, testifying in deposition or court, and travel time.

State, deputy, or associate medical examiner(s)
time for all court cases . . . . . $450 per hour with a one-hour minimum

c. A cremation permit fee of $75 will be assessed for each permit investigated and authorized by the state medical examiner's office.

126.3(2) *Expense reimbursement.* Other laboratory services associated with an autopsy, which shall include, but not be limited to, photography, toxicology, radiology, microbiology, and morgue fees, shall be billed by the department to the county of appointment. Moneys collected pursuant to this subrule shall be paid by the department to the laboratory or other entity providing the service.

126.3(3) *State medical examiner acting as county medical examiner.* When the state medical examiner acts in the capacity of county medical examiner, the state medical examiner shall receive from the county of appointment a fee of $100 per hour, with a one-hour minimum, for each report prepared plus the state medical examiner's actual expenses. Counties may not depend on the state medical examiner for full-time coverage.

[**ARC 9533B**, IAB 6/1/11, effective 7/6/11; **ARC 9880B**, IAB 11/30/11, effective 1/4/12]

641—126.4(691) Fees for tissue recovery. When the tissue recovery room located within the office of the state medical examiner is utilized by an authorized tissue recovery agency, a fee of $400 per case shall be assessed. The tissue recovery agency is responsible for this fee, payable to the office of the state medical examiner.

These rules are intended to implement Iowa Code section 691.6.

[Filed 11/1/84, Notice 6/6/84—published 11/21/84, effective 12/26/84]

[Filed 4/1/88, Notice 9/23/87—published 4/20/88, effective 5/25/88]
[Filed emergency 12/23/88 after Notice of 11/2/88—published 1/11/89, effective 12/23/88]
[Filed emergency 8/29/96—published 9/25/96, effective 9/1/96]
[Filed emergency 6/9/99—published 6/30/99, effective 6/9/99]
[Filed 11/19/01, Notice 10/3/01—published 12/12/01, effective 1/16/02]
[Filed 1/16/03, Notice 11/27/02—published 2/5/03, effective 3/12/03]
[Filed 1/10/07, Notice 11/22/06—published 1/31/07, effective 3/7/07]
[Filed ARC 9533B (Notice ARC 9435B, IAB 3/23/11), IAB 6/1/11, effective 7/6/11]
[Filed ARC 9880B (Notice ARC 9771B, IAB 10/5/11), IAB 11/30/11, effective 1/4/12]

CHAPTER 127
COUNTY MEDICAL EXAMINERS
[Prior to 7/29/87, Health Department [470] Ch 127]

641—127.1(144,331,691) Definitions.

"Autopsy" means the external and internal postmortem examination of a deceased person.

"Cause of death" means the disease or injury which sets in motion the chain of events which eventually result in the death of a person. The physician shall consider "but for" this injury or disease the person would still be living.

"County medical examiner" or *"CME"* means a medical or osteopathic physician or surgeon licensed in the state of Iowa and appointed by the board of supervisors to serve in this capacity.

"County medical examiner investigator" or *"CME-I"* means an individual appointed by a county medical examiner, with approval by the board of supervisors and the state medical examiner, to serve under the supervision of a county medical examiner to assist in death investigations.

"County of appointment" means the county which requests a medical examiner to conduct an investigation, perform or order an autopsy, or prepare a report(s) in a death investigation case. The request may be authorized by the county attorney or the county medical examiner. The county of appointment shall be the county in which the death occurred.

"Cremation" means the technical process, using heat and flame, that reduces human remains to bone fragments.

"Day" means calendar day.

"Death" means the condition as described in Iowa Code section 702.8.

"Death affecting the public interest" means any death of a human being in which the circumstances are sudden, unexpected, violent, suspicious, or unattended, including but not limited to those deaths listed at Iowa Code section 331.802(3) and described as follows:

1. Violent death. Violent death includes homicide, suicide, or accidental death resulting from physical, mechanical, thermal, chemical, electrical, or radiation injury. A medical examiner's investigation and report are required irrespective of the period of survival following injury.

2. Death caused by criminal abortion, including self-induced.

3. Death related to disease thought to be virulent or contagious which may constitute a public hazard. Any such case investigated by a medical examiner shall be reported to the department and to the local health authority.

4. Death that has occurred unexpectedly or from an unexplained cause. This term includes the following situations:

- Death without prior medical conditions accounting for the death.
- Apparently instantaneous death without obvious cause.
- Death during or following an unexplained syncope or coma.
- Death during an unexplained, acute, or rapidly fatal illness.

5. Death of a person confined in a prison, jail, or correctional institution.

6. Death of a person when unattended by a physician during the period of 36 hours immediately preceding death.

- This term includes the following situations:

— Persons found dead without obvious or probable cause.

— Death when the person was unattended by a physician during a terminal illness.

— Fetal death unattended by a physician. A fetal death is a fetus born dead after a gestation period of 20 completed weeks or greater or a fetus which weighs 350 grams or more (Iowa Code section 144.29).

- This term does not include a prediagnosed terminal or bedfast case in which a physician has been in attendance within 30 days preceding the death.
- This term does not include a terminally ill patient who was admitted to and received services from a hospice program as defined in Iowa Code section 135J.1, if a physician or registered nurse employed by the program was in attendance within 30 days preceding the death.

7. Death of a person if the body is not claimed by a relative or friend.

8. Death of a person if the identity of the deceased is unknown.

9. Death of a child under the age of two years if death results from an unknown cause or if the circumstances surrounding the death indicate that sudden infant death syndrome may be the cause of death.

"Department" means the Iowa department of public health.

"Deputy county medical examiner" or *"DCME"* means an individual appointed by a county medical examiner, with approval by the board of supervisors and the state medical examiner, to assist the county medical examiner in the performance of the county medical examiner's duties.

"External examination" means a close inspection of the exterior of a deceased human body for the purpose of locating, describing, and delineating any and all injuries or other abnormalities. External examination of a body does not constitute an autopsy, even if toxicology samples are obtained.

"Fee" means an amount to be paid to a county medical examiner's office as determined by the board of supervisors of the county of appointment for completion of an investigation, autopsy, or report(s). Fees for services provided by the state medical examiner's office are established at 641—126.3(691).

"Form ME-1" means the Preliminary Report of Investigation by Medical Examiner form.

"Form ME-2" means the Medical Examiner Embalming Certificate form.

"Form ME-3" means the Permit by Medical Examiner for Autopsy form.

"Form ME-4" means the Preliminary Report of Child/Infant Death Scene Investigation form.

"Form ME-5" means the Cremation Permit by Medical Examiner form.

"Form ME-6" means the Iowa State Medical Examiner's Office Personal Effects form.

"Form ME-7" means the Medication List form.

"Form ME-8" means the Body Identification Record form.

"Manner of death" means the circumstances under which the cause of death occurred and may be specified as follows: natural, accident, suicide, homicide, undetermined, or pending.

"Medical care provider" means an individual licensed or certified in any medical profession, including but not limited to a physician, physician assistant, nurse, emergency medical care provider, certified nurse's aide, pharmacist, physical therapist, and medical technologist.

"Medical examiner" means the state medical examiner, deputy state medical examiner, county medical examiner, or deputy county medical examiner.

641—127.2(331,691) Duties of medical examiners—jurisdiction over deaths which affect the public interest.

127.2(1) *Jurisdiction.* Upon receiving notification of a death which affects the public interest, a medical examiner shall notify any appropriate law enforcement agency not otherwise notified and shall take charge of the body of the decedent. The body shall not be disturbed or removed from the position in which it was found without authorization from the medical examiner except for the purpose of preserving the body from loss or destruction or permitting the passage of traffic on a highway, railroad, or airport, or unless the failure to remove the body might endanger life, safety, or health.

127.2(2) *Investigation.* A county medical examiner shall conduct a preliminary investigation of the cause and manner of death and shall utilize the investigative protocol outlined in the most current edition of the County Medical Examiner's Handbook, available from the state medical examiner's office. A medical examiner may perform or authorize performance of any scientific study to assist in identifying the cause, circumstances, and manner of death. A medical examiner shall cooperate with other investigating officials and agencies involved and shall share reports, information, and conclusions with these officials and agencies.

127.2(3) *Reports required.*

a. Form ME-1.

(1) Preparation and filing. A county medical examiner shall prepare a written report of the examiner's findings on the Preliminary Report of Investigation by Medical Examiner, Form ME-1. A county medical examiner shall file the original Form ME-1 with the state medical examiner's office within 14 days of the date of death and shall file a copy of the Form ME-1 with the county attorney within 14 days of the date of the death and shall retain a copy for the medical examiner's records.

(2) Content. Form ME-1 shall be completed as fully as possible in light of all available information and may be signed by either a county medical examiner or a county medical examiner investigator acting under the supervision of a county medical examiner. If the cause or manner of death, identity of the decedent, or other information is unknown or pending at the time of filing, "unknown" or "pending" may be written in the appropriate area of the form. If additional information becomes available, this information shall be forwarded to the state medical examiner in written form at such time as it becomes available to be added as a supplement to the file.

b. Jurisdiction declined or terminated. A form designated by the office of the state medical examiner shall be completed and filed in accordance with subparagraphs (1) and (2) of paragraph *"a"* above in cases reported to the county medical examiner where jurisdiction is terminated or declined.

127.2(4) *Disposition of body.* After an investigation, including an autopsy if one was performed, the body of the decedent shall be made available to the funeral home designated by a relative or friend of the decedent for burial or appropriate disposition. A medical examiner shall not use influence in favor of a particular funeral director or funeral home. If no one claims a body, it shall be disposed of as provided in Iowa Code chapter 142.

127.2(5) *Coverage.*

a. When an individual is required to report a death to a medical examiner and the county medical examiner cannot be located or is not available, the individual shall contact a county medical examiner from any adjacent Iowa county to perform those duties outlined in this chapter. The responding medical examiner shall have full authority to conduct any procedures necessary to the investigation of the cause and manner of death. If an adjacent county medical examiner is not available, the state medical examiner shall be contacted and may act in the capacity of a county medical examiner.

b. The responding county medical examiner shall be reimbursed by the county for which the service is provided for all fees and expenses at the rate which is customarily paid by the county for which the service is provided or at a rate agreed upon by the medical examiner and the board of supervisors of the county for which the service is provided.

641—127.3(331,691) Autopsies.

127.3(1) *Autopsy required.* A county medical examiner shall perform an autopsy or order that an autopsy be performed in the following cases:

a. All cases of homicide or suspected homicide, irrespective of the period of survival following injury.

b. All cases in which the manner of death is undetermined.

c. All cases involving unidentified bodies.

d. All deaths of children under the age of two when there is not a clear cause of death, including suspected cases of sudden infant death syndrome. A summary of the findings of the autopsy shall be transmitted by the physician who performed the autopsy to the county medical examiner within two days of completion of the report. Autopsies performed on children under the age of two when the circumstances surrounding the death indicate that sudden infant death syndrome may be the cause of death or the cause of death is not clearly explained by known medical history shall conform to Form ME-4.

e. All work- and farm-related deaths unless there is an obvious natural cause of death.

f. All drowning deaths.

g. All deaths of commercial vehicle drivers that occur during the performance of their job duties.

h. Deaths due to poisoning.

i. Deaths of airplane pilots who die as a result of an airplane crash. The National Transportation Safety Board and the Federal Aviation Administration should be contacted prior to the autopsy to request specimen kit(s).

j. Deaths due to a natural disaster, including tornadoes and floods.

k. Deaths in a prison, jail or correctional institution or under police custody, where there is not a natural disease process that accounts for the death.

127.3(2) *Autopsy recommended.* It is recommended that a county medical examiner should perform an autopsy or order that an autopsy be performed in the following cases:

a. Deaths of adolescents less than 18 years of age when there is not a natural cause of death.

b. All cases which involve a motor vehicle crash, unless it is a single motor vehicle accident with no potential for litigation and there is an obvious cause of death or the injuries have been clearly documented by hospitalization.

c. Rescinded IAB 3/29/06, effective 5/3/06.

d. Deaths from suicide.

e. All pedestrian, bicycle, motorcycle, snowmobile, boating, watercraft, three- or four-wheeler or all-terrain vehicle fatalities.

f. Deaths due to failure of a consumer product.

g. Deaths due to a possible public health hazard.

h. Deaths due to drug or alcohol abuse or overdose.

i. Electrical- and lightning-related deaths.

j. Deaths from burns or smoke or soot inhalation.

k. All deaths related to exposure, such as hypothermia and hyperthermia.

l. All sport-related deaths, including but not limited to deaths from auto racing and deaths resulting from injuries sustained in football, basketball, baseball, softball, soccer, or other games or sports.

127.3(3) *Other deaths.* For those deaths not listed in subrule 127.3(1) or 127.3(2), a county medical examiner shall determine whether the public interest requires an autopsy and may perform an autopsy or order that an autopsy be performed. A county medical examiner may consult with the state medical examiner to assist in determining the need for an autopsy.

127.3(4) *Performance of autopsy.*

a. *Who may authorize.* Autopsies may be authorized by the state medical examiner, the county medical examiner for the county in which the death occurred or the county where any injury contributing to or causing the death was sustained, or the county attorney who would have jurisdiction in any criminal proceeding related to the death.

b. *Who may perform.* An autopsy shall be performed by a pathologist trained or with experience in forensic pathology, licensed to practice medicine and surgery or osteopathic medicine and surgery in the state of Iowa and board-certified by the American Board of Pathology, or under the direct supervision of a physician with these qualifications. If an autopsy is performed by a physician who does not satisfy these criteria and who is not performing under the direct supervision of a physician who satisfies these criteria, the physician shall submit a supplemental report with the Permit by Medical Examiner for Autopsy, Form ME-3, which details the specific training, education, and experience which qualify the physician to perform an autopsy. The following cases/types of deaths shall be transported to the office of the state medical examiner for autopsy unless otherwise approved by the state medical examiner:

(1) Deaths of adolescents through 18 years of age when there is not a known or preexisting natural cause of death.

(2) All cases of homicide or suspected homicide, irrespective of the period of survival following injury.

(3) Deaths of children under the age of 2 years if death results from an unknown cause or if the circumstances surrounding the death indicate that Sudden Infant Death Syndrome may be the cause of death.

(4) All suspicious suicides.

(5) All high-profile deaths including, but not limited to, deaths of elected officials in municipal, state or federal government.

(6) All deaths of inmates occurring in any institutions under the department of corrections as outlined in Iowa Code section 904.102, excluding those deaths that result from a pre-existing medical condition.

c. *Permit required—Form ME-3.* A medical examiner shall complete the Permit by Medical Examiner for Autopsy, Form ME-3. All reasonable efforts shall be made to complete the Form ME-3

prior to the performance of an autopsy and to submit the form with the body of the decedent or to submit the form via facsimile to the state medical examiner.

127.3(5) *Autopsy report.* A complete record of the findings of the autopsy shall be submitted to the state medical examiner's office, the county attorney of the county where the death occurred and the county attorney of the county where the injury contributing to or causing the death was sustained within 90 days following the date of death, unless unusual circumstances requiring further investigation or testing exist. The report filed shall include all diagrams, transcriptions of the autopsy observations and opinions, and toxicology reports.

127.3(6) *Out-of-state autopsy.* The body of a decedent may be sent out of state for an autopsy or postmortem examination only if the county medical examiner certifies in writing that the out-of-state autopsy or examination is necessary for any of the following reasons:

a. A forensic pathologist practicing in the state of Iowa is unavailable;

b. Requiring an in-state autopsy would cause financial hardship; or

c. Requiring an in-state autopsy would delay the funeral or burial more than three days.

127.3(7) *Retention and disposal of tissues, organs, and bodily fluids.* The office of the state medical examiner shall retain tissues, organs, and bodily fluids as necessary to determine the cause and manner of death or as deemed advisable by the state medical examiner for medical or public health investigation, teaching, or research. Tissues, organs, and bodily fluids shall be retained at a minimum for the time periods established by the National Association of Medical Examiners and may be retained for a longer time period at the discretion of the state medical examiner. Tissues, organs, and bodily fluids retained under this subrule shall be disposed of without the specific consent or notification of the legal next of kin and in accordance with applicable federal and state regulations including but not limited to OSHA-recommended biohazard and blood-borne pathogen standards. The anatomical material shall be removed from the laboratory premises through use of a contracted, licensed, and bonded medical waste removal service to a medical waste processing center for final disposition.

641—127.4(331,691) Fees.

127.4(1) *Payment of fee and expenses.*

a. A medical examiner shall receive from the county of appointment a fee for each preliminary investigation and report submitted in a case in which a death affects the public interest. A county medical examiner shall also receive from the county of appointment the examiner's actual expenses.

b. A pathologist or other physician who performs an autopsy under medical examiner authorization shall be paid for the services by the county of appointment.

127.4(2) *Reimbursement.*

a. *County of residence different from county of appointment—Iowa resident.* The county of the decedent's residence shall reimburse the county of appointment for the fee and expenses paid by the county of appointment.

b. *Death caused by criminal defendant.* If the person's death is caused by a criminal defendant who has been convicted and sentenced for murder, voluntary manslaughter, involuntary manslaughter, or homicide by vehicle, the county of the person's residence may recover from the defendant the fee and expenses.

c. *Out-of-state resident—law enforcement involvement.* The fee and expenses of a county medical examiner who performs an investigation or autopsy of a person who dies after being brought into the state for emergency medical treatment by or at the direction of an out-of-state law enforcement officer or public authority shall be paid by the state. A claim for payment shall be filed with the state appeal board.

d. *Out-of-state resident—no law enforcement involvement.* The fee and expenses of a county medical examiner who performs an investigation or autopsy of an out-of-state resident shall be paid by the county of appointment.

e. *Child under the age of two.* Rescinded IAB 4/2/14, effective 5/7/14.

[**ARC 1403C**, IAB 4/2/14, effective 5/7/14]

641—127.5(144,331,691) Death certificates—deaths affecting the public interest.

127.5(1) *Completion.* The funeral director to whom the body is released shall complete the personal data on the death certificate. The medical examiner shall complete the manner of death and cause of death sections of the death certificate within 72 hours after determination of the cause of death. If an autopsy is performed by the state medical examiner, the death certificate shall be submitted to the state medical examiner's office for completion. All information included on the certificate shall be typewritten.

127.5(2) *Filing.* The funeral director shall file the certificate with the county registrar in the county in which the death occurred. A death certificate shall be filed prior to the issuance of a burial transit permit and prior to disposal of the body.

127.5(3) *Extension of time.* If a medical examiner is unable to complete the manner of death and cause of death sections of the death certificate within the 24-hour time period, the funeral director shall file a death certificate form completed with all available information. Such certificate shall be authority for the issuance of a burial transit permit. Within 15 days, a supplemental report shall be filed with the local registrar which provides the information missing from the original certificate.

127.5(4) *Additional standards.* Additional rules relative to death certificates may be found at 641—Chapter 101.

641—127.6(331,691) Cremation.

127.6(1) *Permit obtained prior to cremation—Form ME-5.* A permit for cremation shall be obtained from a county medical examiner prior to cremation of a body of a decedent. For purposes of this requirement, a facsimile or electronic copy of the cremation permit has the same legal effect as the original. Cremation permits shall be issued on the Cremation Permit by Medical Examiner, Form ME-5.

127.6(2) *Requirements for issuance of permit.* A county medical examiner shall direct an inquiry into the cause and manner of death and shall determine whether the death is one which affects the public interest prior to issuing a cremation permit.

a. *Death which affects the public interest.* If the death occurred in a manner specified in Iowa Code section 331.802(3) or if reasonable suspicion that the death occurred in such a manner exists, a medical examiner shall view the body, make a personal inquiry into the cause and manner of death, and complete or cause to be completed all necessary autopsy or postmortem examinations prior to issuing a cremation permit.

b. *Death which does not affect the public interest.* If, following an inquiry into the cause and manner of death, the county medical examiner determines that the death did not occur in a manner specified in Iowa Code section 331.802(3), a medical examiner is not required to view the body prior to issuing a cremation permit. A county medical examiner shall certify on the Cremation Permit by Medical Examiner, Form ME-5, that the medical examiner's inquiry into the cause and manner of death did not disclose evidence that the death occurred in a manner specified in Iowa Code section 331.802(3).

127.6(3) *Fee.* A fee for the Cremation Permit by Medical Examiner, Form ME-5, shall be paid by the family, next of kin, guardian of the decedent, or other person authorized to act on behalf of the decedent.

641—127.7(331,691) County medical examiner investigators.

127.7(1) *Appointment.* A county medical examiner may appoint one or more county medical examiner investigators upon approval by the board of supervisors and the state medical examiner.

127.7(2) *Qualifications.*

a. Prior to appointment, a CME-I should possess a minimum of two years of experience as a licensed or certified nurse or medical care provider. A certified peace officer may be appointed to the position of CME-I if a nurse or medical care provider is not available.

b. A CME-I shall satisfy the following criteria:

(1) Prior to or within two years of appointment, attend the St. Louis University School of Medicine Basic Medicolegal Death Investigation Course or its state medical examiner-approved equivalent; and

(2) Prior to or within five years of appointment, obtain certification at the registry-level as a death investigator by the American Board of Medicolegal Death Investigators.

c. A CME-I is not required to meet the requirements of paragraph *"a"* or *"b"* if the individual has functioned in the capacity of a CME-I for a period of five years as of January 1, 2002.

d. If a CME is unable to appoint a CME-I who possesses the qualifications required by paragraph *"a," "b,"* or *"c,"* the CME may request a waiver. Waiver requests shall be submitted in writing to the state medical examiner and shall include the efforts undertaken by the CME to locate a CME-I who meets the above qualifications; the qualifications of the individual willing to serve in the capacity of CME-I; and the period of time for which the waiver is requested, not to exceed two years. The state medical examiner has sole discretion to waive the requirements of this rule and may withdraw or modify a waiver request upon a finding that the CME-I has failed to adequately perform the duties of the position or for other good cause.

e. If a CME-I is unable to meet the eligibility requirements for obtaining registry certification due to the small number of cases requiring investigation in the county of appointment, then a waiver shall be obtained from the state medical examiner in order for the investigator to continue his or her duties. The county medical examiner shall submit a request for a waiver in writing with documentation of the number of deaths occurring in the county of appointment which require death investigation. The waiver must be renewed every five years if the required number of investigations has still not been achieved.

127.7(3) *Duties.* A CME-I shall assist in death investigations. A CME-I acting under the supervision of a county medical examiner may sign the Form ME-1. A CME-I shall not sign a certificate of death or a Form ME-5.

127.7(4) *Supervision.* A CME-I shall serve under the supervision of a county medical examiner. A CME-I provides services under the direction of a county medical examiner or state medical examiner's office. A CME-I shall at all times perform services in a manner which is consistent with the protocol outlined in the most current edition of the County Medical Examiner's Handbook and any policies or protocols of the supervising county medical examiner.

127.7(5) *Fees.* Fees for the services provided by a CME-I shall be paid by the county of appointment.
[**ARC 8526B**, IAB 2/10/10, effective 3/17/10]

641—127.8(331,691) Deputy county medical examiners.

127.8(1) *Appointment.* A county medical examiner may appoint one or more deputy county medical examiners upon approval by the board of supervisors and the state medical examiner.

127.8(2) *Qualifications.* A DCME shall be licensed in the state of Iowa as a medical or osteopathic physician or surgeon.

127.8(3) *Duties.* A DCME shall serve at the direction of the county medical examiner and may perform any duty of a county medical examiner which is delegated by the county medical examiner to the DCME.

127.8(4) *Fees.* Fees for the services provided by a DCME shall be paid by the county of appointment.

641—127.9(331,691) Failure to comply with rules. If a county medical examiner, deputy county medical examiner, county medical examiner investigator, pathologist, or other physician fails to comply with these rules, the state medical examiner may provide written notice of the failure to comply to that individual, the appropriate county medical examiner, and the appropriate county board of supervisors. Within 30 days of the date of the notice, the individual to whom the notice was provided shall submit a written response to the state medical examiner, outlining a proposed corrective action plan. If no response is received within the 30 days or if the proposed corrective action plan is unacceptable, the state medical examiner shall forward copies of the notice and all pertinent correspondence and information to the board of supervisors for the county which appointed the individual, notifying the board of the individual's failure to comply with these rules.

641—127.10(331,691,22) Confidentiality. Records and reports of a medical examiner may be confidential records pursuant to Iowa Code sections 22.7(2), 22.7(5), and 22.7(41) and other provisions of Iowa law. Prior to releasing a medical examiner record or report to a member of the public, a county

medical examiner may inform the appropriate law enforcement agency, the county attorney, and the state medical examiner to determine whether release is authorized under Iowa law.

641—127.11(331,691,670) Indemnification. A board of supervisors shall defend, hold harmless, and indemnify a county medical examiner and any properly appointed staff members to the extent provided in Iowa Code chapter 670.

These rules are intended to implement Iowa Code chapters 331 and 691.

[Filed May 10, 1966]
[Filed emergency 7/10/87—published 7/29/87, effective 7/10/87]
[Filed 11/19/01, Notice 10/3/01—published 12/12/01, effective 1/16/02]
[Filed 1/16/03, Notice 11/27/02—published 2/5/03, effective 3/12/03]
[Filed 3/9/06, Notice 2/1/06—published 3/29/06, effective 5/3/06]
[Filed 1/10/07, Notice 11/22/06—published 1/31/07, effective 3/7/07]
[Filed 7/10/08, Notice 5/21/08—published 7/30/08, effective 9/3/08]
[Filed ARC 8526B (Notice ARC 8162B, IAB 9/23/09), IAB 2/10/10, effective 3/17/10]
[Filed ARC 1403C (Notice ARC 1316C, IAB 2/5/14), IAB 4/2/14, effective 5/7/14]

CHAPTER 128
DOGS FOR SCIENTIFIC RESEARCH
Rescinded IAB 7/30/08, effective 9/3/08.

CHAPTER 129
Reserved

CHAPTER 130
EMERGENCY MEDICAL SERVICES ADVISORY COUNCIL

641—130.1(147A) Definitions. For the purposes of this chapter, the following definitions shall apply:

"Chairperson" means the chair of the advisory council, who has been elected by the majority of the advisory council's members.

"Department" means the Iowa department of public health.

"Director" means the director of the Iowa department of public health.

"Emergency medical care provider" means an individual who has been trained to provide emergency and nonemergency medical care at the first responder, EMT-basic, EMT-intermediate, EMT-paramedic, paramedic specialist, or other certification level recognized by the department before 1984 and who has been issued a certificate by the department.

"Emergency medical services" or *"EMS"* means an integrated medical care delivery system to provide emergency and nonemergency medical care at the scene or during out-of-hospital patient transportation in an ambulance.

641—130.2(147A) Purpose. The EMS advisory council shall advise the director and develop policy recommendations concerning the regulation, administration, and coordination of emergency medical services in the state.

641—130.3(147A) Appointment.

130.3(1) The EMS advisory council shall be appointed by the director. The appointments shall be for three-year staggered terms which shall expire on June 30. Vacancies shall be filled in the same manner in which the original appointments were made for the balance of the unexpired term.

130.3(2) Membership of the council shall be comprised of individuals nominated from, but not limited to, the following state or national organizations:

a. One physician from each of the following organizations:

(1) Iowa Osteopathic Medical Association.

(2) Iowa Medical Society.

(3) American College of Emergency Physicians.

(4) Iowa Academy of Family Physicians.

(5) University of Iowa Hospitals and Clinics.

(6) American Academy of Emergency Medicine.

(7) American Academy of Pediatrics.

b. Representatives from each of the following organizations:

(1) Iowa Physician Assistant Society.

(2) EMS Education Programs Committee.

(3) Rescinded IAB 2/9/11, effective 3/16/11.

(4) Iowa Nurses Association.

(5) Iowa Hospital Association.

(6) Iowa State Association of Counties.

c. Two out-of-hospital emergency medical care providers from the Iowa Firemen's Association.

d. One out-of-hospital emergency medical care provider from the Iowa Professional Firefighters.

e. Three out-of-hospital emergency medical care providers, with at least one representing volunteer EMS and one representing a private service program, from the Iowa EMS Association.

f. Two at-large volunteer emergency medical care providers.

[**ARC 9356B**, IAB 2/9/11, effective 3/16/11]

641—130.4(147A) Absences. Three consecutive unexcused absences shall be grounds for the director to consider dismissal of the advisory council member and to appoint another. The chairperson of the advisory council is charged with providing notification of absences.

641—130.5(147A) Officers.

130.5(1) Officers of the advisory council shall be a chairperson and a vice chairperson who shall be elected at the first meeting of each fiscal year unless they are designated as officers at the time of their appointment.

a. Officers may serve no more than three consecutive terms as an officer.

b. Vacancies in the office of chairperson shall be filled by the vice chairperson.

c. Vacancies in the office of vice chairperson shall be filled by election at the next meeting after the vacancy occurs.

130.5(2) Duties of officers. The chairperson shall preside at all meetings of the advisory council, appoint such subcommittees as deemed necessary, and designate the chairperson of each subcommittee. If the chairperson is absent or unable to act, the vice chairperson shall perform the duties of the chairperson. When so acting, the vice chairperson shall have all the powers of and be subject to all the restrictions upon the chairperson. The vice chairperson shall also perform such other duties as may be assigned by the chairperson.

641—130.6(147A) Meetings.

130.6(1) The advisory council shall establish a meeting schedule on an annual basis to conduct business. There shall be a minimum of four meetings per year. Meetings may be scheduled as business requires, but notice to members must be at least five working days prior to the meeting date. Four weeks' notice is encouraged to accommodate the schedules of professional members.

130.6(2) Robert's Rules of Order shall govern all meetings.

130.6(3) A majority of appointed members shall be considered a quorum.

130.6(4) Any advisory council member who is unable to attend a meeting will notify the chairperson; there may not be a meeting if a quorum is not present.

130.6(5) When a quorum is present, a position is carried by affirmative vote of the majority of those present.

130.6(6) Persons wishing to make a presentation to the advisory council shall submit the request to the chairperson not less than 14 days prior to the meeting. Presentations may be made either at the discretion of the chairperson or upon matters appearing on the agenda.

130.6(7) Persons wishing to submit written materials should do so at least 14 days in advance of the scheduled meeting to ensure that advisory council members have adequate time to receive and evaluate the materials.

130.6(8) The advisory council may conduct a meeting by electronic means only in circumstances in which an in-person meeting is impossible or impractical, pursuant to Iowa Code section 21.8.

641—130.7(147A) Subcommittees. The advisory council may designate one or more subcommittees to perform such duties as may be deemed necessary.

641—130.8(147A) Expenses of advisory council members. The following may be considered necessary expenses for reimbursement of advisory council members when the expenses are incurred on behalf of advisory council business and are subject to established state reimbursement rates.

1. Reimbursement for travel in a private car.
2. Actual lodging and meal expenses, including sales tax on lodging and meals.
3. Actual expenses of public transportation.

641—130.9(147A) Gender balance. If not otherwise provided by law, all advisory bodies of the department appointed by the governor, director or designee shall be gender-balanced.

These rules are intended to implement Iowa Code chapter 147A.

[Filed 9/13/07, Notice 8/1/07—published 10/10/07, effective 11/14/07]

[Filed ARC 9356B (Notice ARC 9237B, IAB 11/17/10), IAB 2/9/11, effective 3/16/11]

CHAPTER 131
EMERGENCY MEDICAL SERVICES—PROVIDER EDUCATION/TRAINING/CERTIFICATION

641—131.1(147A) Definitions. For the purpose of these rules, the following definitions shall apply:

"Advanced emergency medical technician" or *"AEMT"* means an individual who has successfully completed a course of study based on the United States Department of Transportation's Advanced Emergency Medical Technician Instructional Guidelines (January 2009), has passed the NREMT practical and cognitive examinations for the AEMT, and is currently certified by the department as an AEMT.

"Automated external defibrillator" or *"AED"* means an external semiautomatic device that determines whether defibrillation is required.

"Candidate" means an individual who has successfully completed a course of study at an EMR, EMT, AEMT or paramedic or other level certified by the department and who has been recommended by a training program for NREMT certification examination.

"CECBEMS" means the continuing education coordinating board for emergency medical services.

"CEH" means continuing education hour, which is based upon a minimum of 50 minutes of training per hour.

"Certification period" means the length of time an emergency medical care provider certificate is valid. The certification period shall be for two years from initial issuance or from renewal, unless otherwise specified on the certificate or unless sooner suspended or revoked.

"Certification status" means a condition placed on an individual certificate for identification as active, deceased, denied, dropped, expired, failed, hold, idle, inactive, incomplete, pending, probation, restricted, retired, revoked, surrendered, suspended, or temporary.

"Continuing education" means department-approved training which is obtained by a certified emergency medical care provider to maintain, improve, or expand relevant skills and knowledge and to satisfy renewal of certification requirements.

"Course completion date" means the date of the final classroom session of an emergency medical care provider course.

"Course coordinator" means an individual who has been assigned by the training program to coordinate the activities of an emergency medical care provider course.

"CPR" means training and successful course completion in cardiopulmonary resuscitation, AED, and obstructed airway procedures for all age groups according to recognized national standards.

"Critical care paramedic" or *"CCP"* means a currently certified paramedic specialist who has successfully completed a critical care course of instruction approved by the department and has received endorsement from the department as a critical care paramedic.

"Current course completion" means written recognition given for training and successful course completion of CPR with an expiration date or a recommended renewal date that exceeds the current date.

"Department" means the Iowa department of public health.

"Director" means the director of the Iowa department of public health.

"DOT" means the United States Department of Transportation.

"Emergency medical care" means such medical procedures as:

1. Administration of intravenous solutions.
2. Intubation.
3. Performance of cardiac defibrillation and synchronized cardioversion.
4. Administration of emergency drugs as provided by protocol.
5. Any medical procedure authorized by subrule 131.3(3).

"Emergency medical care provider" means an individual who has been trained to provide emergency and nonemergency medical care at the EMR, EMT, AEMT, paramedic or other certification level recognized by the department before 2011 and who has been issued a certificate by the department.

"Emergency medical responder" or *"EMR"* means an individual who has successfully completed a course of study based on the United States Department of Transportation's Emergency Medical Responder Instructional Guidelines (January 2009), has passed the NREMT practical and cognitive examinations for the EMR, and is currently certified by the department as an EMR.

"Emergency medical services" or *"EMS"* means an integrated medical care delivery system to provide emergency and nonemergency medical care at the scene or during out-of-hospital patient transportation in an ambulance.

"Emergency medical technician" or *"EMT"* means an individual who has successfully completed a course of study based on the United States Department of Transportation's Emergency Medical Technician Instructional Guidelines (January 2009), has passed the NREMT practical and cognitive examinations for the EMT, and is currently certified by the department as an EMT.

"Emergency medical technician-ambulance" or *"EMT-A"* means an individual who has successfully completed the 1984 United States Department of Transportation's Emergency Medical Technician-Ambulance curriculum, has passed the department's approved written and practical examinations, and is currently certified by the department as an EMT-A.

"Emergency medical technician-basic" or *"EMT-B"* means an individual who has successfully completed the current United States Department of Transportation's Emergency Medical Technician-Basic curriculum and department enhancements, has passed the department's approved written and practical examinations, and is currently certified by the department as an EMT-B.

"Emergency medical technician-defibrillation" or *"EMT-D"* means an individual who has successfully completed an approved program which specifically addresses manual or automated defibrillation, has passed the department's approved written and practical examinations, and is currently certified by the department as an EMT-D.

"Emergency medical technician-intermediate" or *"EMT-I"* means an individual who has successfully completed an EMT-Intermediate curriculum approved by the department, has passed the department's approved written and practical examinations, and is currently certified by the department as an EMT-I.

"Emergency medical technician-paramedic" or *"EMT-P"* means an individual who has successfully completed the current United States Department of Transportation's EMT-Intermediate curriculum (1999) or the 1985 or earlier DOT EMT-P curriculum, has passed the department's approved written and practical examinations, and is currently certified by the department as an EMT-P.

"EMS advisory council" means the council appointed by the director, pursuant to Iowa Code chapter 147A, to advise the director and develop policy recommendations concerning regulation, administration, and coordination of emergency medical services in the state.

"EMS evaluator" or *"EMS-E"* means an individual who has successfully completed an EMS evaluator curriculum approved by the department and is currently endorsed by the department as an EMS-E.

"EMS instructor" or *"EMS-I"* means an individual who has successfully completed an EMS instructor curriculum approved by the department and is currently endorsed by the department as an EMS-I.

"Endorsement" means an approval granted by the department authorizing an individual to serve as an EMS-I, EMS-E or CCP.

"First responder" or *"FR"* means an individual who has successfully completed the current United States Department of Transportation's first responder curriculum and department enhancements, has passed the department's approved written and practical examinations, and is currently certified by the department as an FR.

"First responder-defibrillation" or *"FR-D"* means an individual who has successfully completed an approved program that specifically addresses defibrillation, has passed the department's approved written and practical examinations, and is currently certified by the department as an FR-D.

"Good standing" means that a student or candidate is in compliance with these rules and training program requirements.

"Idle" means the status of a lower certification level when a higher certification level is held.

"Inactive" means the status of a certification level when an individual requests inactive status or moves from a higher certification level to a lower certification level that was previously idle.

"NCA" means North Central Association of Colleges and Schools.

"NREMT" means National Registry of Emergency Medical Technicians.

"Out-of-state student" means any individual participating in clinical or field experience as a student in an approved out-of-state training program.

"Out-of-state training program" means an EMS program located outside the state of Iowa that is approved by the authorizing agency of the program's home state to conduct initial EMS training for EMR, EMT, AEMT, paramedic or other level certified by the department.

"Outreach course coordinator" means an individual who has been assigned by the training program to coordinate the activities of an emergency medical care provider course held outside the training program facilities.

"Paramedic" means an individual who has successfully completed a course of study based on the United States Department of Transportation's Paramedic Instructional Guidelines (January 2009), has passed the NREMT practical and cognitive examination for the paramedic, and is currently certified by the department as a paramedic.

"Paramedic specialist" or *"PS"* means an individual who has successfully completed the current United States Department of Transportation's EMT-Paramedic curriculum (1999) or equivalent, has passed the department's approved written and practical examinations, and is currently certified by the department as a paramedic specialist.

"Patient" means an individual who is sick, injured, or otherwise incapacitated.

"Physician" means an individual licensed under Iowa Code chapter 148.

"Physician assistant" or *"PA"* means an individual licensed pursuant to Iowa Code chapter 148C.

"Physician designee" means a registered nurse licensed under Iowa Code chapter 152 or any physician assistant licensed under Iowa Code chapter 148C and approved by the board of physician assistants. The physician designee acts as an intermediary for a supervising physician in accordance with written policies and protocols in directing the care provided by emergency medical care providers.

"Preceptor" means an individual who has been assigned by the training program, clinical facility or service program to supervise students while the students are completing their clinical or field experience. A preceptor must be an emergency medical care provider certified at the level at which the preceptor is providing supervision or at a higher level or must be licensed as a registered nurse, physician assistant or physician.

"Primary instructor" means an individual who is responsible for teaching the majority of an emergency medical care provider course.

"Protocols" means written directions and orders consistent with the department's standard of care that are to be followed by an emergency medical care provider in emergency and nonemergency situations. Protocols must be approved by the service program's medical director and address the care of both adult and pediatric patients.

"Registered nurse" or *"RN"* means an individual licensed pursuant to Iowa Code chapter 152.

"Service program" or *"service"* means any medical care ambulance service or nontransport service that has received authorization from the department.

"Service program area" means the geographic area of responsibility served by any given ambulance or nontransport service program.

"Student" means any individual enrolled in a training program and participating in the didactic, clinical, or field experience portion of the program.

"Training program" means an Iowa college approved by the North Central Association of Colleges and Schools or an Iowa hospital authorized by the department to conduct emergency medical care training.

"Training program director" means an appropriate health care professional (full-time educator or practitioner of emergency or critical care) assigned by the training program to direct the operation of the training program.

"Training program medical director" means a physician licensed under Iowa Code chapter 148 who is responsible for directing an emergency medical care training program.
[**ARC 9443B**, IAB 4/6/11, effective 8/1/11]

641—131.2(147A) Emergency medical care providers—requirements for enrollment in training programs. To be enrolled in an EMS training program course leading to certification by the department, an applicant shall:

1. Be at least 17 years of age at the time of enrollment.
2. Have a high school diploma or its equivalent if enrolling in an AEMT or paramedic course.
3. Be able to speak, write and read English.
4. Hold a current course completion card in CPR if enrolling in an EMT, AEMT or paramedic course.
5. Be currently certified, as a minimum, as an EMT if enrolling in an AEMT or paramedic course. If an applicant is currently nationally registered but not certified in Iowa, the applicant must submit an endorsement application to the department within 14 days after the course start date.
6. Be a current emergency medical care provider, RN, PA, or physician and submit a recommendation in writing from an approved EMS training program if enrolling in an EMS instructor course.
7. Be currently certified as a paramedic if enrolling in a CCP course.

[**ARC 9443B**, IAB 4/6/11, effective 8/1/11]

641—131.3(147A) Emergency medical care providers—authority.

131.3(1) Authority of emergency medical care personnel. An emergency medical care provider who holds an active certification issued by the department may:

a. Render, via on-line medical direction, emergency and nonemergency medical care in those areas for which the emergency medical care provider is certified as part of an authorized service program:

(1) At the scene of an emergency;
(2) During transportation to a hospital;
(3) While in the hospital emergency department;
(4) Until patient care is directly assumed by a physician or by authorized hospital personnel; and
(5) During transfer from one medical care facility to another or to a private home.

b. Function in any hospital or any other entity in which health care is ordinarily provided only when under the direct supervision of a physician when:

(1) Enrolled as a student in, and approved by, a training program;
(2) Fulfilling continuing education requirements;
(3) Employed by or assigned to a hospital or other entity in which health care is ordinarily provided only when under the direct supervision of a physician as a member of an authorized service program, or in an individual capacity, by rendering lifesaving services in the facility in which employed or assigned pursuant to the emergency medical care provider's certification and under direct supervision of a physician, physician assistant, or registered nurse. An emergency medical care provider shall not routinely function without the direct supervision of a physician, physician assistant, or registered nurse. However, when the physician, physician assistant, or registered nurse cannot directly assume emergency care of the patient, the emergency medical care provider may perform, without direct supervision, emergency medical care procedures for which certified, if the life of the patient is in immediate danger and such care is required to preserve the patient's life;
(4) Employed by or assigned to a hospital or other entity in which health care is ordinarily provided only under the direct supervision of a physician, as a member of an authorized service program, or in an individual capacity, to perform nonlifesaving procedures for which certified and designated in a written job description. Such procedures may be performed after the patient is observed by and when the emergency medical care provider is under the supervision of the physician, physician assistant, or registered nurse, including when the registered nurse is not acting in the capacity of a physician designee, and where the procedure may be immediately abandoned without risk to the patient.

131.3(2) When emergency medical care personnel are functioning in a capacity identified in 131.3(1)*"a,"* they may perform emergency and nonemergency medical care without contacting a supervising physician or physician designee if written protocols have been approved by the service program medical director which clearly identify when the protocols may be used in lieu of voice contact.

131.3(3) Scope of practice.

a. Emergency medical care providers shall provide only those services and procedures that are authorized within the scope of practice for which they are certified.

b. Scope of Practice for Iowa EMS Providers (April 2013) is hereby incorporated and adopted by reference for emergency medical care providers. For any differences that may occur between the Scope of Practice adopted by reference and these administrative rules, the administrative rules shall prevail.

c. The department may grant a variance for changes to the Scope of Practice that have not yet been adopted by reference in these rules. A variance to these rules may be granted by the department pursuant to 641—subrule 132.14(1).

d. Scope of Practice for Iowa EMS Providers is available through the Iowa Department of Public Health, Bureau of EMS, Lucas State Office Building, Des Moines, Iowa 50319-0075, or the bureau of EMS Web site (www.idph.state.ia.us/ems).

131.3(4) The department may approve emergency medical pilot project(s) on a limited basis. Requests for a pilot project application shall be made to the department.

131.3(5) An emergency medical care provider who has knowledge of an emergency medical care provider, service program or training program that has violated Iowa Code chapter 147A or these rules shall report such information to the department within 30 days.

[**ARC 9443B**, IAB 4/6/11, effective 8/1/11; **ARC 0062C**, IAB 4/4/12, effective 5/9/12; **ARC 0480C**, IAB 12/12/12, effective 1/16/13; **ARC 1404C**, IAB 4/2/14, effective 5/7/14]

641—131.4(147A) Emergency medical care providers—certification, renewal standards, procedures, continuing education, and fees.

131.4(1) *Student application and candidate examination.*

a. Applicants shall complete the EMS Student Registration within 14 days after the beginning of the course. The EMS Student Registration shall be completed via the bureau of EMS Web site at www.idph.state.ia.us/ems.

b. Upon satisfactory completion of the course and all training program requirements, including payment of appropriate fees, a candidate shall be recommended by a training program to take the appropriate NREMT certification examination. A candidate is not eligible to continue functioning as a student in the clinical and field settings and must obtain state certification to perform appropriate skills.

c. A candidate shall submit an EMS Certification Application form to the department. EMS Certification Application forms are provided by the department.

d. When a student's EMS Student Registration or a candidate's EMS Certification Application is referred to the department for investigation or when a student or candidate is otherwise under investigation by the department, the individual shall not be eligible for certification, and the practical examination results will not be confirmed with the NREMT, until the individual is approved by the department.

e. The fee for certification as an emergency medical care provider is $30, payable to the Iowa Department of Public Health. This nonrefundable fee shall be paid prior to a candidate's receiving certification.

f. A candidate must successfully complete the NREMT practical and cognitive examinations to be eligible for state certification.

g. The practical examination may be conducted by an authorized training program and must be conducted according to the policies and procedures of the NREMT.

h. A candidate must meet all certification requirements within two years of the initial course completion date. If a candidate is unable to complete the requirements within two years due to medical reasons or military obligation, an extension may be granted upon submission of a signed statement from an appropriate medical or military authority and approval by the department.

i. Examination scores shall be confidential except that they may be released to the training program that provided the training or to other appropriate state agencies or released in a manner which does not permit the identification of an individual.

j. An applicant for EMS-I endorsement shall successfully complete an EMS-Instructor curriculum approved by the department.

131.4(2) *Multiple certificates and renewal.*

a. The department shall consider the highest level of certification attained to be active. Any lower levels of certification shall be considered idle.

b. A lower-level certificate may be issued if the individual fails to renew the higher level of certification or voluntarily chooses to move from a higher level to a lower level. To be issued a certificate in these instances, an individual shall:

(1) Complete all applicable continuing education requirements for the lower level during the certification period and submit a change of status request, available through the Iowa Department of Public Health, Bureau of EMS, Lucas State Office Building, Des Moines, Iowa 50319-0075, or the bureau of EMS Web site (www.idph.state.ia.us/ems).

(2) Complete and submit to the department an EMS Affirmative Renewal of Certification Application and the applicable fee.

(3) Complete the reinstatement process in 131.4(4)*"f"* if renewal of the higher level is requested later.

c. A citation and warning, denial, probation, restriction, suspension or revocation imposed upon an individual certificate holder by the department shall be considered applicable to all certificates issued to that individual by the department.

131.4(3) *Certification transition.*

a. An individual certified as a first responder based on the 1996 National Standard Curriculum for First Responders, an EMT-B, an EMT-I, an EMT-P or a PS shall complete the following certification transition requirements. Transition documents for each level are available through the Iowa Department of Public Health, Bureau of EMS, Lucas State Office Building, Des Moines, Iowa 50319-0075, or the bureau of EMS Web site (www.idph.state.ia.us/ems).

b. FR transition to EMR.

(1) The FR shall complete training identified in the FR to EMR Documentation (January 2011).

(2) The FR shall verify completion of training on the Affirmative Renewal of Certification Application by the certification's regular expiration date prior to October 1, 2014.

(3) An FR who does not complete the transition requirements will not satisfy the renewal requirements for the certification period immediately prior to October 1, 2014.

c. EMT-B transition to EMT.

(1) The EMT-B shall complete training identified in the EMT-B to EMT Documentation (January 2011).

(2) The EMT-B shall verify completion of training on the Affirmative Renewal of Certification Application by the certification's regular expiration date prior to April 1, 2015.

(3) An EMT-B who does not complete the transition requirements will not satisfy the renewal requirements for the certification period immediately prior to April 1, 2015.

d. EMT-I transition to AEMT.

(1) The EMT-I shall submit documentation of training identified in the EMT-I to AEMT Documentation (January 2011) to the department.

(2) The EMT-I shall successfully complete the NREMT computer-based AEMT examination.

(3) A provider certified as an EMT-I who has not completed the transition to AEMT will be issued an EMT certification on April 1, 2016.

e. EMT-P transition to paramedic.

(1) The EMT-P shall submit documentation of training identified in the EMT-P to Paramedic Documentation (January 2011) to the department.

(2) The EMT-P shall successfully complete the NREMT computer-based paramedic examination.

(3) A provider certified as an EMT-P who has not completed the transition to paramedic will be issued an AEMT certification on April 1, 2018.

f. PS transition to paramedic.

(1) The PS shall complete training identified in the PS to Paramedic Documentation (January 2011).

(2) The PS shall verify completion of training on the Affirmative Renewal of Certification Application by the certification's regular expiration date prior to April 1, 2015.

(3) A PS who does not complete the transition requirements will not satisfy the renewal requirements for the certification period immediately prior to April 1, 2015.

131.4(4) *Renewal of certification.*

a. A certificate shall be valid for two years from issuance unless specified otherwise on the certificate or unless sooner suspended or revoked.

b. All continuing education requirements shall be completed during the certification period prior to the certificate's expiration date. Failure to complete the continuing education requirements prior to the expiration date shall result in an expired certification, unless the emergency medical care provider requests an extension as described in 131.4(11)*"b."*

c. An emergency medical care provider shall submit the EMS Affirmative Renewal of Certification Application to the department within 90 days prior to the expiration date. Failure to submit a renewal application to the department within 90 days prior to the expiration date (date of submission is based upon the postmark date) shall cause the current certification to expire.

d. An emergency medical care provider shall not function with an expired certification.

e. An emergency medical care provider who completes the required continuing education during the certification period but fails to submit the EMS Affirmative Renewal of Certification Application within 90 days prior to the expiration date shall be required to submit a late fee of $30 (in addition to the renewal fee) and complete the audit process pursuant to 131.4(5)*"i"* to obtain renewal of certification.

f. An emergency medical care provider who has not completed the required continuing education during the certification period or who is seeking to reinstate an expired, inactive, or retired certificate shall:

(1) Complete a refresher course or equivalent approved by the department.

(2) Meet all applicable eligibility requirements.

(3) Submit an EMS Reinstatement Application and the applicable fees to the department.

(4) Pass the appropriate practical and cognitive certification examinations.

g. An emergency medical care provider may request an inactive or retired status for a certificate. The request must be made by submitting a change of status request, available through the Iowa Department of Public Health, Bureau of EMS, Lucas State Office Building, Des Moines, Iowa 50319-0075, or the bureau of EMS Web site (www.idph.state.ia.us/ems). Reinstatement of an inactive or retired certificate shall be made pursuant to 131.4(4)*"f."* A request for inactive or retired status, when accepted in connection with a disciplinary investigation or proceeding, has the same effect as an order of revocation.

h. An emergency medical care provider shall be deemed to have complied with the continuing education requirements during periods in which the provider serves honorably on active duty in the military services or for periods in which the provider is a government employee working as an emergency medical care provider and assigned to duty outside the United States. The emergency medical care provider must submit the Affirmative Renewal of Certification Application, all appropriate fees and documentation of assignment.

131.4(5) *Continuing education renewal standards.* The following standards apply to renewal through continuing education:

a. An applicant shall sign and submit an Affirmative Renewal of Certification Application provided by the department and submit the applicable fee within 90 days prior to the certificate's expiration date.

b. An applicant shall complete the continuing education requirements, including current course completion in CPR, during the certification period for the following emergency medical care provider levels:

(1) EMR, FR, FR-D—12 hours of approved continuing education.
(2) EMT, EMT-A, EMT-B, EMT-D—24 hours of approved continuing education.
(3) AEMT, EMT-I—36 hours of approved continuing education.
(4) EMT-P—48 hours of approved continuing education.
(5) PS, paramedic—60 hours of approved continuing education.
(6) EMS-I—Attend at least one EMS-I workshop sponsored by the department.
(7) CCP—8 hours of approved CCP core curriculum topics.

c. At least 50 percent of the required hours for renewal shall be formal continuing education including, but not limited to, refresher programs, seminars, lecture programs, scenario-based programs, conferences, and Internet-delivered courses approved by CECBEMS and shall meet the criteria established in 131.4(6)*"d."*

d. Up to 50 percent of the required continuing education hours may be made up of any of the following:
(1) Nationally recognized EMS-related courses.
(2) EMS self-study courses.
(3) Medical director or designee case reviews.
(4) Clinical rounds with medical team (grand rounds).
(5) Working with students as an EMS field preceptor.
(6) Hospital or nursing home clinical performance.
(7) Skills workshops/maintenance.
(8) Community public information education projects.
(9) Emergency driver training.
(10) EMS course audits.
(11) Injury prevention or wellness initiatives.
(12) EMS service operations, e.g., management programs, continuous quality improvement.
(13) EMS system development meetings that occur at the county, regional or state level.
(14) Disaster preparedness.
(15) Emergency runs/responses as a volunteer member of an authorized EMS service program (primary attendant).
(16) EMS-Instructor development.

e. Additional hours may be allowed for any of the following (maximum):
(1) CPR—2 hours.
(2) Disaster drill—4 hours.
(3) Rescue—4 hours.
(4) Hazardous materials—8 hours.
(5) Practical examination evaluator—4 hours.
(6) Topics outside the provider's core curriculum—8 hours.

f. With training program approval, a person who is not enrolled in an emergency medical care provider course may audit the course for CEHs.

g. The certificate holder must notify the department within 30 days of a change in address.

h. The certificate holder shall maintain a file containing documentation of CEHs accrued during each certification period for four years from the end of each certification period.

i. A group of individual certificate holders will be audited for each certification period. Certificate holders to be audited will be chosen in a random manner or at the discretion of the bureau of EMS. Falsifying reports or failure to comply with the audit request may result in formal disciplinary action. Certificate holders who are audited will be required to submit an Audit Report Form provided by the department within 45 days of the request. If audited, the certificate holders must provide the following information:
(1) Date of program.
(2) Program sponsor number.
(3) Title of program.
(4) Number of approved hours.

(5) Appropriate supervisor signatures if clinical or practical evaluator hours are claimed.

j. An EMS instructor who teaches EMS initial or continuing education courses may use those courses for renewal as approved under subrule 131.4(6).

131.4(6) *Continuing education approval.* The following standards shall be applied for approval of continuing education:

a. Required CEHs identified in 131.4(5)*"c"* shall be approved by the department, CECBEMS, or an authorized EMS training program, using a sponsor number assignment system approved by the department.

b. Optional CEHs identified in 131.4(5)*"d"* and 131.4(5)*"e"* require no formal sponsor number; however, CEHs awarded shall be verified by an authorized EMS training program, a national EMS continuing education accreditation entity, a service program medical director, an appropriate community sponsor, or the department. Documentation of CEHs awarded shall include the date and title of the program or event, the number of hours approved, and the applicable signatures.

c. Courses in physical, social or behavioral sciences offered by accredited colleges and universities are approved for CEHs and need no further approval. One quarter credit equals 10 hours. One semester credit equals 15 hours.

d. Courses approved as formal education must meet the following criteria:

(1) Involve live interaction with an instructor or be an Internet-delivered course approved by CECBEMS; and

(2) Be based on the appropriate department curricula for EMS providers and include one or more of the following topic areas: airway management, patient assessment, trauma assessment and management, medical assessment and management, behavioral emergencies, obstetrics, gynecology, pediatrics, or patient care record documentation.

e. Programs developed and delivered by the department may be approved for formal education.

131.4(7) *Out-of-state continuing education.* Out-of-state continuing education courses will be accepted for CEHs if they meet the criteria in subrule 131.4(5) and have been approved for emergency medical care personnel in the state in which the courses were held. A copy of course completion certificates (or other verifying documentation) shall, upon request, be submitted to the department with the EMS Affirmative Renewal of Certification Application.

131.4(8) *Fees.* The following fees shall be collected by the department and shall be nonrefundable:

a. FR, EMR, EMT-B, EMT, EMT-I, AEMT, EMT-P, PS and paramedic certification fee—$30.

b. Certification renewal fees:

(1) FR, EMR, EMT-B, and EMT—no fee.

(2) EMT-I, AEMT—$10.

(3) EMT-P, PS and paramedic—$25.

A certification renewal fee is refundable if the applicant's certification renewal status is not posted on the bureau of EMS Web site in the certification database within ten working days from the date the department receives the completed renewal application.

c. Endorsement certification fee—$50.

d. Reinstatement fee—$30.

e. Late fee—$30.

f. Duplicate/replacement card—$10.

g. Returned check—$20.

h. Extension fee—$50.

131.4(9) *Certification through reciprocity.* An individual currently certified by the NREMT must also possess a current Iowa certificate to be considered certified in this state. The department shall contact the NREMT to verify certification or registry and good standing.

a. To receive Iowa certification, the individual shall:

(1) Complete and submit the EMS Reciprocity Application available from the department.

(2) Provide verification of current certification in another state, if applicable, and registration with the NREMT.

(3) Provide verification of current course completion in CPR.

(4) Meet all other applicable eligibility requirements necessary for Iowa certification pursuant to these rules.

(5) Submit all applicable fees to the department.

b. An individual certified through reciprocity shall satisfy the renewal and continuing education requirements set forth in subrule 131.4(4) to renew Iowa certification.

131.4(10) *National registration in lieu of continuing education.*

a. An emergency medical care provider who is certified in Iowa and is registered with the NREMT may renew certification by meeting the NREMT reregistration requirements.

b. The emergency medical care provider shall submit the NREMT Registration in Lieu of Continuing Education Application, available through the Iowa Department of Public Health, Bureau of EMS, Lucas State Office Building, Des Moines, Iowa 50319-0075, or the bureau of EMS Web site (www.idph.state.ia.us/ems), to the department, with proof of NREMT registration exceeding the current certification expiration date, within 90 days prior to the expiration date.

131.4(11) *Extension of certification.*

a. If an emergency medical care provider is unable to complete the required continuing education during the certification period due to a medical reason, an extension of certification may be issued upon submission of a signed statement from an appropriate medical provider and approval by the department. The statement must include information concerning the reason the emergency medical care provider could not complete the continuing education requirements, the time period affected, and the length of time requested for extension.

b. If an emergency medical care provider is unable to attain all continuing education requirements within the certification period, a 45-day extension may be granted. To complete the extension process, the provider shall:

(1) Submit a Request for Extension Application, available through the Iowa Department of Public Health, Bureau of EMS, Lucas State Office Building, Des Moines, Iowa 50319-0075, or the bureau of EMS Web site (www.idph.state.ia.us/ems), at least 7 days prior to the expiration date, but no more than 90 days prior to the expiration date, and a $50 extension fee.

(2) Be given 45 days from the current expiration date to complete continuing education requirements.

(3) Submit the EMS Affirmative Renewal of Certification Application, with all applicable renewal fees, to the department prior to the extended expiration date (date of submission is based on the postmark date).

(4) Not use continuing education completed during the extension period in the subsequent renewal period.

[**ARC 9443B**, IAB 4/6/11, effective 8/1/11]

641—131.5(147A) Training programs—standards, application, inspection and approval.

131.5(1) *Education standards.*

a. A training program shall use the applicable United States Department of Transportation's Education Standards (January 2009) for courses leading to certification.

b. A training program shall use the EMS-Instructor curriculum approved by the department for courses leading to the EMS-I endorsement.

c. A training program shall use the Iowa CCP curriculum (November 2001) for courses leading to the CCP endorsement.

d. A training program may waive portions of the required emergency medical care provider training for individuals certified as emergency medical care providers or licensed in other health care professions including, but not limited to, nursing, physician assistant, respiratory therapist, dentistry, and military. The training program shall document equivalent training and what portions of the course have been waived for equivalency.

131.5(2) *Clinical or field experience resources.* If clinical or field experience resources are located outside the framework of the training program, written agreements for such resources shall be obtained by the training program.

131.5(3) *Facilities.*

a. A training program shall ensure adequate classroom, laboratory, and practice space to conduct the training program. A library with reference materials on emergency and critical care shall also be available.

b. A training program shall ensure opportunities for the student to accomplish the appropriate skill competencies in the clinical environment. The following hospital units shall be available for clinical experience for each training program as required in approved education standards pursuant to subrule 131.5(1):

(1) Emergency department;

(2) Intensive care unit or coronary care unit or both;

(3) Operating room and recovery room;

(4) Intravenous or phlebotomy team or other method to obtain IV experience;

(5) Pediatric unit;

(6) Labor and delivery suite and newborn nursery; and

(7) Psychiatric unit.

c. A training program shall ensure opportunities for the student to accomplish the appropriate skill competencies in the field environment. The training program shall use an appropriate emergency medical care service program to provide field experience as required in approved education standards pursuant to subrule 131.5(1).

d. A training program shall have liability insurance and shall offer liability insurance to students while they are enrolled in the training program.

131.5(4) *Staff.*

a. A training program medical director shall be a physician licensed under Iowa Code chapter 148.

b. A training program director who is an appropriate health care professional shall be appointed. This individual shall be a full-time educator or a practitioner in emergency or critical care.

c. Course coordinators, outreach course coordinators, and primary instructors used by the training program shall be currently endorsed as EMS instructors.

d. The instructional staff shall be comprised of physicians, nurses, pharmacists, emergency medical care personnel, or other health care professionals who have appropriate education and experience in emergency and critical care.

e. Preceptors shall be assigned in each of the clinical units in which emergency medical care students are obtaining clinical experience and field experience. The preceptors shall supervise student activities to ensure the quality and relevance of the experience. Student activity records shall be kept and reviewed by the immediate supervisor(s) and by the program director and course coordinator.

f. If a training program's medical director resigns, the training program director shall report this to the department and provide a curriculum vitae for the medical director's replacement. A new course shall not be started until a qualified medical director has been appointed.

g. A training program shall maintain records pertaining to each instructor used which include, as a minimum, the instructor's qualifications.

h. A training program is responsible for ensuring that each instructor is experienced in the area being taught and adheres to the education standards.

i. The training program shall ensure that each practical examination evaluator and mock patient is familiar with the NREMT practical examination requirements and procedures. Practical examination evaluators shall attend a workshop sponsored by the department and have the evaluator endorsement.

131.5(5) *Advisory committee.* There shall be an advisory committee which includes training program representatives and representatives from other groups such as affiliated medical facilities, local medical establishments, and ambulance, rescue and first response service programs.

131.5(6) *Student records.* A training program shall maintain an individual record for each student. Training program policy and department requirements will determine contents. These requirements include, but are not limited to:

a. Application;

b. Current certifications and endorsements;

c. Student record or transcript of hours and performance (including examinations) in classroom, clinical, and field experience settings.

131.5(7) *Selection of students.* There may be a selection committee to select students. The selection committee shall use, as a minimum, the prerequisites outlined in rule 641—131.2(147A).

131.5(8) *Students.*

a. A student may perform any procedures and skills for which the student has received training if the student is under the direct supervision of a physician or physician designee or under the remote supervision of a physician or physician designee with direct field supervision by an appropriately certified emergency medical care provider.

b. A student shall not be substituted for the regular personnel of any affiliated medical facility or service program but may be employed while enrolled in the training program.

c. A student is not eligible to continue functioning as a student of the training program in the clinical or field setting if the student is not in good standing with the training program, once the student has met the training program requirements, or once the student has been approved for certification testing.

131.5(9) *Financing and administration.*

a. There shall be sufficient funding available to the training program to ensure that each class started can be completed.

b. Tuition charged to students shall be accurately stated.

c. Advertising for training programs shall be appropriate.

d. A training program shall provide to each student, no later than the first session of the course, a guide that outlines, as a minimum:

(1) Course objectives.

(2) Required hours for completion.

(3) Minimum acceptable scores on interim testing.

(4) Attendance requirements.

(5) Grievance procedure.

(6) Disciplinary actions that may be invoked, the grounds for such actions, and the process provided.

(7) Requirements for certification.

131.5(10) *Training program application, inspection and approval.*

a. A training program graduating students at the paramedic level after December 31, 2012, must be accredited by, or must have submitted a self-study application to, the Committee on Accreditation for the Emergency Medical Services Professions.

b. A training program seeking initial or renewal approval shall use the EMS Training Program Application provided by the department. The application shall include, as a minimum:

(1) Names of appropriate officials of the training program;

(2) Evidence of availability of clinical resources;

(3) Evidence of availability of physical facilities;

(4) Evidence of qualified faculty;

(5) Qualifications and major responsibilities of each faculty member;

(6) Policies used for selection, promotion, and graduation of trainees;

(7) Practices followed in safeguarding the health and well-being of trainees and of patients receiving emergency medical care within the scope of the training program; and

(8) Level(s) of EMS certification to be offered.

c. A new training program shall submit a needs assessment which justifies the need for the training program.

d. Applications shall be reviewed by the department in accordance with the 2005 Standards and Guidelines for the Accreditation of Educational Programs in the Emergency Medical Services Professions, published by the Commission on Accreditation of Allied Health Education Programs. Failure to comply with the standards may lead to disciplinary action as described in rule 641—131.8(147A).

e. The department shall perform an on-site inspection of the training program's facilities and clinical resources. The purpose of the inspection is to examine educational objectives, patient care practices, facilities and administrative practices and to prepare a written report for review and action by the department.

f. The department shall inspect each training program at least once every five years. The department without prior notification may make additional inspections at times, places and under such circumstances as it deems necessary to ensure compliance with Iowa Code chapter 147A and these rules.

g. No person shall interfere with the inspection activities of the department or its agents. Interference with or failure to allow an inspection may be cause for disciplinary action regarding training program approval.

h. Representatives of the training program may be required by the department to meet with the department at the time the application and inspection report are discussed.

i. A written report of department action and the department inspection report shall be sent to the training program.

j. Training program approval shall not exceed five years.

k. A training program shall notify the department, in writing, of any change in ownership or control within 30 days.

l. Temporary variances. If during a period of authorization there is some occurrence that temporarily causes a training program to be in noncompliance with these rules, the department may grant a temporary variance. Temporary variances to these rules (not to exceed six months in length per any approved request) may be granted by the department to a currently authorized training program. Requests for temporary variances shall apply only to the training program requesting the variance and shall apply only to those requirements and standards for which the department is responsible. To request a variance, the training program shall:

(1) Notify the department verbally (as soon as possible) of the need to request a temporary variance. The program shall submit to the department, within ten days after having given verbal notification to the department, a written explanation for the temporary variance request. The address is Iowa Department of Public Health, Bureau of EMS, Lucas State Office Building, Des Moines, Iowa 50319-0075.

(2) Cite the rule from which the variance is requested.

(3) State why compliance with the rule cannot be maintained.

(4) Explain the alternative arrangements that have been or will be made regarding the variance request.

(5) Estimate the period of time for which the variance will be needed.

m. Training program applications and on-site inspection reports are public information.

131.5(11) *Out-of-state training program application and approval.*

a. An out-of-state training program shall apply to the department for approval.

b. An out-of-state training program seeking department approval shall use the out-of-state training program application provided by the department. The application shall include, as a minimum:

(1) Verification of approval to conduct initial EMS training by the authorizing agency within the out-of-state training program's home state;

(2) Evidence of oversight provided by a physician medical director;

(3) Evidence of qualified faculty;

(4) Evidence of curriculum utilized;

(5) Evidence of written contracts between the out-of-state training program and clinical and field sites being utilized within Iowa; and

(6) Description of practices followed in safeguarding the health and well-being of trainees and of patients receiving emergency medical care within the scope of the training program.

c. An out-of-state training program shall provide the department with a roster of students who will be participating in the clinical or field experience within the state of Iowa and, for each program, the sites where the students will be participating.

d. An out-of-state training program shall not be authorized to provide initial EMS training within the state of Iowa.

e. An out-of-state training program shall be limited to utilization of clinical or field sites or both within Iowa.

f. Representatives of the out-of-state training program may be required by the department to meet with the department at the time the application is discussed.

g. An out-of-state training program approval shall not exceed five years.

h. An out-of-state training program shall notify the department, in writing, of any change in ownership, control, or approval status by the out-of-state training program's authorizing state agency within 30 days.

131.5(12) *Out-of-state students.*

a. An out-of-state student shall be registered in good standing in an approved out-of-state training program.

b. An out-of-state student may perform any procedures and skills for which the student is training provided that the procedure or skill is within the Iowa scope of practice policy of a comparable Iowa emergency medical care provider. The student must be under the direct supervision of a physician or physician designee or under the remote supervision of a physician or physician designee with direct supervision by an appropriately certified emergency medical care provider.

c. An out-of-state student shall not be substituted for personnel of any affiliated medical facility or service program but may be employed while enrolled in the training program.

d. An out-of-state student participating in the clinical or field setting within the state of Iowa shall provide documentation of liability insurance.

e. An out-of-state student is not eligible to continue functioning as a student of the approved out-of-state training program in the clinical or field setting if the student is not in good standing with the approved out-of-state training program, once the student has met the training program's requirements, or once the student has been approved for certification testing.

f. An out-of-state student shall not be eligible for Iowa EMS certification without meeting the requirements for certification through reciprocity in subrule 131.4(9).

[**ARC 9443B**, IAB 4/6/11, effective 8/1/11]

641—131.6(147A) Continuing education providers—approval, record keeping and inspection.

131.6(1) Continuing education courses for emergency medical care personnel may be approved by the department, an EMS training program or a national EMS continuing education accreditation entity.

131.6(2) A training program may conduct continuing education courses (utilizing appropriate instructors) pursuant to subrule 131.4(6).

a. Each training program shall assign a sponsor number to each appropriate continuing education course using an assignment system approved by the department.

b. Course approval shall be completed prior to the course's being offered.

c. Each training program shall maintain a participant record that includes, as a minimum:

(1) Name.

(2) Address.

(3) Certification number.

(4) Course sponsor number.

(5) Course instructor.

(6) Date of course.

(7) CEHs awarded.

d. Each training program shall submit to the department on a quarterly basis a completed Approved EMS Continuing Education Form.

131.6(3) Record keeping and record inspection.

a. To ensure compliance or to verify the validity of any training program application, the department may request additional information or inspect the records of any continuing education provider who is currently approved or who is seeking approval.

b. No person shall interfere with the inspection activities of the department or its agents. Interference with or failure to allow an inspection may be cause for disciplinary action regarding training program approval.

[**ARC 9443B**, IAB 4/6/11, effective 8/1/11]

641—131.7(147A) Complaints and investigations—denial, citation and warning, probation, suspension, or revocation of emergency medical care personnel certificates or renewal.

131.7(1) This rule is not subject to waiver or variance pursuant to 641—Chapter 178 or any other provision of law.

131.7(2) Method of discipline. The department has the authority to impose the following disciplinary sanctions against an emergency medical care provider:

a. Issue a citation and warning.

b. Impose a civil penalty not to exceed $1000.

c. Require reexamination.

d. Require additional education or training.

e. Impose a period of probation under specific conditions.

f. Prohibit permanently, until further order of the department, or for a specific period, a provider's ability to engage in specific procedures, methods, acts or activities incident to the practice of the profession.

g. Suspend a certificate until further order of the department or for a specific period.

h. Deny an application for certification.

i. Revoke a certification.

j. Impose such other sanctions as allowed by law and as may be appropriate.

131.7(3) The department may deny an application for issuance or renewal of an emergency medical care provider certificate, including endorsement, or may impose any of the disciplinary sanctions provided in subrule 131.7(2) when it finds that the applicant or certificate holder has committed any of the following acts or offenses:

a. Negligence in performing emergency medical care.

b. Failure to follow the directions of supervising physicians or their designees.

c. Rendering treatment not authorized under Iowa Code chapter 147A.

d. Fraud in procuring certification or renewal including, but not limited to:

(1) An intentional perversion of the truth in making application for a certification to practice in this state;

(2) False representations of a material fact, whether by word or by conduct, by false or misleading allegations, or by concealment of that which should have been disclosed when making application for a certification in this state; or

(3) Attempting to file or filing with the department or training program any false or forged diploma or certificate or affidavit or identification or qualification in making an application for a certification in this state.

e. Professional incompetency. Professional incompetency includes, but is not limited to:

(1) A substantial lack of knowledge or ability to discharge professional obligations within the scope of practice.

(2) A substantial deviation from the standards of learning or skill ordinarily possessed and applied by other emergency medical care providers in the state of Iowa acting in the same or similar circumstances.

(3) A failure to exercise the degree of care which is ordinarily exercised by the average emergency medical care provider acting in the same or similar circumstances.

(4) Failure to conform to the minimal standard of acceptable and prevailing practice of certified emergency medical care providers in this state.

f. Knowingly making misleading, deceptive, untrue or fraudulent representations in the practice of the profession or engaging in unethical conduct or practice harmful or detrimental to the public. Proof

of actual injury need not be established. Acts which may constitute unethical conduct include, but are not limited to:

(1) Verbally or physically abusing a patient or coworker.

(2) Improper sexual contact with or making suggestive, lewd, lascivious or improper remarks or advances to a patient or coworker.

(3) Betrayal of a professional confidence.

(4) Engaging in a professional conflict of interest.

(5) Falsification of medical records.

g. Engaging in any conduct that subverts or attempts to subvert a department investigation.

h. Failure to comply with a subpoena issued by the department or failure to cooperate with an investigation of the department.

i. Failure to comply with the terms of a department order or the terms of a settlement agreement or consent order.

j. Failure to report another emergency medical care provider to the department for any violations listed in these rules, pursuant to Iowa Code chapter 147A.

k. Knowingly aiding, assisting or advising a person to unlawfully practice EMS.

l. Representing oneself as an emergency medical care provider when one's certification has been suspended or revoked or when one's certification is lapsed or has been placed on inactive status.

m. Permitting the use of a certification by a noncertified person for any purpose.

n. Mental or physical inability reasonably related to and adversely affecting the emergency medical care provider's ability to practice in a safe and competent manner.

o. Being adjudged mentally incompetent by a court of competent jurisdiction.

p. Sexual harassment of a patient, student, or supervisee. Sexual harassment includes sexual advances, sexual solicitation, requests for sexual favors, and other verbal or physical conduct of a sexual nature.

q. Habitual intoxication or addiction to drugs.

(1) The inability of an emergency medical care provider to practice with reasonable skill and safety by reason of the excessive use of alcohol on a continuing basis.

(2) The excessive use of drugs which may impair an emergency medical care provider's ability to practice with reasonable skill or safety.

(3) Obtaining, possessing, attempting to obtain or possess, or administering controlled substances without lawful authority.

r. Fraud in representation as to skill, ability or certification.

s. Willful or repeated violations of Iowa Code chapter 147A or these rules.

t. Violating a statute of this state, another state, or the United States, without regard to its designation as either a felony or misdemeanor, which relates to the provision of emergency medical care, including but not limited to a crime involving dishonesty, fraud, theft, embezzlement, controlled substances, substance abuse, assault, sexual abuse, sexual misconduct, or homicide. A copy of the record of conviction or plea of guilty is conclusive evidence of the violation.

u. Having certification to practice emergency medical care suspended or revoked or having other disciplinary action taken by a licensing or certifying authority of this state or another state, territory or country. A copy of the record or order of suspension, revocation or disciplinary action is conclusive or prima facie evidence.

v. Falsifying certification renewal reports or failure to comply with the renewal audit request.

w. Acceptance of any fee by fraud or misrepresentation.

x. Repeated failure to comply with standard precautions for preventing transmission of infectious diseases as issued by the Centers for Disease Control and Prevention of the United States Department of Health and Human Services.

y. Violating privacy and confidentiality. An emergency medical care provider shall not disclose or be compelled to disclose patient information unless required or authorized by law.

z. Discrimination. An emergency medical care provider shall not practice, condone, or facilitate discrimination against a patient, student, or supervisee on the basis of race, ethnicity, national origin,

color, sex, sexual orientation, age, marital status, political belief, religion, mental or physical disability, diagnosis, or social or economic status.

aa. Practicing emergency medical services or using a designation of certification or otherwise holding oneself out as practicing emergency medical services at a certain level of certification when the emergency medical care provider is not certified at such level.

ab. Failure to respond within 30 days of receipt, unless otherwise specified, of communication from the department which was sent by registered or certified mail.

[**ARC 9443B**, IAB 4/6/11, effective 8/1/11]

641—131.8(147A) Complaints and investigations—denial, citation and warning, probation, suspension, or revocation of training program approval or renewal.

131.8(1) This rule is not subject to waiver or variance pursuant to 641—Chapter 178 or any other provision of law.

131.8(2) Method of discipline. The department has the authority to impose the following disciplinary sanctions against a training program:

a. Issue a citation and warning.

b. Impose a period of probation under specific conditions.

c. Prohibit permanently, until further order of the department, or for a specific period, a program's ability to engage in specific procedures, methods, acts or activities incident to the practice of the profession.

d. Suspend an authorization until further order of the department or for a specific period.

e. Deny an application for authorization.

f. Revoke an authorization.

g. Impose such other sanctions as allowed by law and as may be appropriate.

131.8(3) The department may impose any of the disciplinary sanctions provided in subrule 131.8(2) when it finds that the training program or applicant has failed to meet the applicable provisions of these rules or has committed any of the following acts or offenses:

a. Fraud in procuring approval or renewal.

b. Falsification of training or continuing education records.

c. Suspension or revocation of approval to provide emergency medical care training or other disciplinary action taken pursuant to Iowa Code chapter 147A. A certified copy of the record or order of suspension, revocation or disciplinary action is conclusive or prima facie evidence.

d. Engaging in any conduct that subverts or attempts to subvert a department investigation.

e. Failure to respond within 30 days of receipt of communication from the department which was sent by registered or certified mail.

f. Failure to comply with a subpoena issued by the department or failure to cooperate with an investigation of the department.

g. Failure to comply with the terms of a department order or the terms of a settlement agreement or consent order.

h. Submission of a false report of continuing education or failure to submit the quarterly report of continuing education.

i. Knowingly aiding, assisting or advising a person to unlawfully practice EMS.

j. Representing itself as an approved training program or continuing education provider when approval has been suspended or revoked or when approval has lapsed or has been placed on inactive status.

k. Using an unqualified individual as an instructor or evaluator.

l. Allowing verbal or physical abuse of a student or staff.

m. A training program provider or continuing education provider shall not sexually harass a patient, student, or supervisee. Sexual harassment includes sexual advances, sexual solicitation, requests for sexual favors, and other verbal or physical conduct of a sexual nature.

n. Betrayal of a professional confidence.

o. Engaging in a professional conflict of interest.

p. Discrimination. A training program or continuing education provider shall not practice, condone, or facilitate discrimination against a patient, student, or supervisee on the basis of race, ethnicity, national origin, color, sex, sexual orientation, age, marital status, political belief, religion, mental or physical disability, diagnosis, or social or economic status.

q. Failure to comply with the 2005 Standards and Guidelines for the Accreditation of Educational Programs in the Emergency Medical Services Professions, published by the Commission on Accreditation of Allied Health Education Programs.

[**ARC 9443B**, IAB 4/6/11, effective 8/1/11]

641—131.9(147A) Reinstatement of certification.

131.9(1) Any person whose certification to practice has been revoked or suspended may apply to the department for reinstatement in accordance with the terms and conditions of the order of revocation or suspension, unless the order of revocation provides that the certification is permanently revoked.

131.9(2) If the order of revocation or suspension did not establish terms and conditions upon which reinstatement might occur or if the certification was voluntarily surrendered, an initial application for reinstatement may not be made until one year has elapsed from the date of the order or the date of the voluntary surrender.

131.9(3) All proceedings for reinstatement shall be initiated by the respondent, who shall file with the department an application for reinstatement of the certification. Such application shall be docketed in the original case in which the certification was revoked, suspended, or relinquished. All proceedings upon the application for reinstatement shall be subject to the same rules of procedure as other cases before the department.

131.9(4) An application for reinstatement shall allege facts which, if established, will be sufficient to enable the department to determine that the basis for the revocation or suspension of the respondent's certification no longer exists and that it will be in the public interest for the certification to be reinstated. The burden of proof to establish such facts shall be on the respondent.

131.9(5) An order denying or granting reinstatement shall be based upon a decision which incorporates findings of facts and conclusions of law. The order shall be published as provided for in this chapter.

[**ARC 9443B**, IAB 4/6/11, effective 8/1/11]

641—131.10(147A) Certification denial.

131.10(1) An applicant who has been denied certification by the department may appeal the denial and request a hearing on the issues related to the licensure denial by serving a notice of appeal and request for hearing upon the department not more than 20 days following the date of mailing of the notification of certification denial to the applicant. The request for hearing shall specifically delineate the facts to be contested at hearing.

131.10(2) All hearings held pursuant to this rule shall be held pursuant to the process outlined in this chapter.

[**ARC 9443B**, IAB 4/6/11, effective 8/1/11]

641—131.11(147A) Emergency adjudicative proceedings. To the extent necessary to prevent or avoid immediate danger to the public health, safety or welfare and consistent with the Constitution and other provisions of law, the department may issue a written order in compliance with Iowa Code section 17A.18 to suspend a certificate in whole or in part, order the cessation of any continuing activity, order affirmative action, or take other action within the jurisdiction of the department by emergency adjudicative order.

131.11(1) Before issuing an emergency adjudicative order, the department shall consider factors including, but not limited to, the following:

a. Whether there has been a sufficient factual investigation to ensure that the department is proceeding on the basis of reliable information;

b. Whether the specific circumstances which pose immediate danger to the public health, safety or welfare have been identified and determined to be continuing;

c. Whether the individual required to comply with the emergency adjudicative order may continue to engage in other activities without posing immediate danger to the public health, safety or welfare;

d. Whether imposition of monitoring requirements or other interim safeguards would be sufficient to protect the public health, safety or welfare; and

e. Whether the specific action contemplated by the department is necessary to avoid the immediate danger.

131.11(2) Issuance of order.

a. An emergency adjudicative order shall contain findings of fact, conclusions of law, and policy reasons to justify the determination of an immediate danger in the department's decision to take immediate action. The order is a public record.

b. The written emergency adjudicative order shall be immediately delivered to the individual who is required to comply with the order. Delivery shall be made by one or more of the following procedures:

(1) Personal delivery.

(2) Certified mail, return receipt requested, to the last address on file with the department.

(3) Fax. Fax may be used as the sole method of delivery if the individual required to comply with the order has filed a written request that agency orders be sent by fax and has provided a fax number for that purpose.

c. To the degree practicable, the department shall select the procedure for providing written notice that best ensures prompt, reliable delivery.

d. Unless the written emergency adjudicative order is provided by personal delivery on the same day that the order issues, the department shall make reasonable immediate efforts to contact by telephone the individual who is required to comply with the order.

e. After the issuance of an emergency adjudicative order, the department shall proceed as quickly as feasible to complete any proceedings that would be required if the matter did not involve an immediate danger.

f. Issuance of a written emergency adjudicative order shall include notification of the date on which department proceedings are scheduled for completion. After issuance of an emergency adjudicative order, continuance of further department proceedings to a later date will be granted only in compelling circumstances upon application in writing unless the individual that is required to comply with the order is the party requesting the continuance.

[**ARC 9443B**, IAB 4/6/11, effective 8/1/11]

641—131.12(147A) Complaints, investigations and appeals.

131.12(1) This rule is not subject to waiver or variance pursuant to 641—Chapter 178 or any other provision of law.

131.12(2) All complaints regarding emergency medical care personnel, training programs or continuing education providers, or those purporting to be or operating as the same, shall be reported to the department in writing. The address is Iowa Department of Public Health, Bureau of EMS, Lucas State Office Building, Des Moines, Iowa 50319-0075.

131.12(3) An emergency medical care provider who has knowledge of an emergency medical care provider or service program that has violated Iowa Code chapter 147A, 641—Chapter 132 or these rules shall report such information to the department.

131.12(4) Complaint investigations may result in the department's issuance of a notice of denial, citation and warning, probation, suspension or revocation.

131.12(5) A determination of mental incompetence by a court of competent jurisdiction automatically suspends a certificate for the duration of the certificate unless the department orders otherwise.

131.12(6) Notice of denial, issuance of a citation and warning, probation, suspension or revocation shall be affected in accordance with the requirements of Iowa Code section 17A.12. Notice to the alleged violator of denial, probation, suspension or revocation shall be served by certified mail, return receipt requested, or by personal service.

131.12(7) Any request for a hearing concerning the denial, citation and warning, probation, suspension or revocation shall be submitted by the aggrieved party in writing to the department by certified mail, return receipt requested, within 20 days of the receipt of the department's notice to take action. The address is Iowa Department of Public Health, Bureau of EMS, Lucas State Office Building, Des Moines, Iowa 50319-0075. If the request is made within the 20-day time period, the notice to take action shall be deemed to be suspended pending the hearing. Prior to or at the hearing, the department may rescind the notice upon satisfaction that the reason for the denial, citation and warning, probation, suspension or revocation has been or will be removed. If no request for a hearing is received within the 20-day time period, the department's notice of denial, citation and warning, probation, suspension or revocation shall become the department's final agency action.

131.12(8) Upon receipt of a request for hearing, the department shall forward the request within five working days to the department of inspections and appeals pursuant to the rules adopted by that agency regarding the transmission of contested cases. The information upon which the adverse action is based and any additional information which may be provided by the aggrieved party shall also be provided to the department of inspections and appeals.

131.12(9) The hearing shall be conducted according to the procedural rules of the department of inspections and appeals found in 481—Chapter 10.

131.12(10) When the administrative law judge makes a proposed decision and order, it shall be served by certified mail, return receipt requested, or delivered by personal service. That proposed decision and order then becomes the department's final agency action without further proceedings ten days after it is received by the aggrieved party unless an appeal to the director is taken as provided in subrule 131.12(11).

131.12(11) Any appeal to the director for review of the proposed decision and order of the administrative law judge shall be filed in writing and mailed to the director by certified mail, return receipt requested, or delivered by personal service within ten days after the receipt of the administrative law judge's proposed decision and order by the aggrieved party. A copy of the appeal shall also be mailed to the administrative law judge. Any request for an appeal shall state the reason for appeal.

131.12(12) Upon receipt of an appeal request, the administrative law judge shall prepare the record of the hearing for submission to the director. The record shall include the following:

a. All pleadings, motions, and rules.

b. All evidence received or considered and all other submissions by recording or transcript.

c. A statement of all matters officially noticed.

d. All questions and offers of proof, objections and rulings on them.

e. All proposed findings and exceptions.

f. The proposed decision and order of the administrative law judge.

131.12(13) The decision and order of the director becomes the department's final agency action upon receipt by the aggrieved party and shall be delivered by certified mail, return receipt requested, or by personal service.

131.12(14) It is not necessary to file an application for a rehearing to exhaust administrative remedies when appealing to the director or the district court as provided in Iowa Code section 17A.19. The aggrieved party to the final agency action of the department who has exhausted all administrative remedies may petition for judicial review of that action pursuant to Iowa Code chapter 17A.

131.12(15) Any petition for judicial review of a decision and order shall be filed in the district court within 30 days after the decision and order becomes final. A copy of the notice of appeal shall be sent to the department by certified mail, return receipt requested, or by personal service. The address is Iowa Department of Public Health, Bureau of EMS, Lucas State Office Building, Des Moines, Iowa 50319-0075.

131.12(16) The party who appeals a final agency action to the district court shall pay the cost of the preparation of a transcript of the contested case hearing for the district court.

131.12(17) Final decisions of the department relating to disciplinary proceedings may be transmitted to the appropriate professional associations, the news media or employer.
[**ARC 9443B**, IAB 4/6/11, effective 8/1/11]

These rules are intended to implement Iowa Code chapter 147A.

[Filed 1/20/00, Notice 12/1/99—published 2/9/00, effective 3/15/00]
[Filed emergency 9/14/00—published 10/4/00, effective 9/14/00]
[Filed 1/10/02, Notice 11/28/01—published 2/6/02, effective 3/13/02]
[Filed 1/13/05, Notice 11/24/04—published 2/2/05, effective 3/9/05]
[Filed emergency 7/13/05 after Notice 6/8/05—published 8/3/05, effective 7/13/05]
[Filed 7/12/06, Notice 5/24/06—published 8/2/06, effective 9/6/06]
[Filed emergency 11/8/06—published 12/6/06, effective 1/1/07]
[Filed 1/10/07, Notice 12/6/06—published 1/31/07, effective 3/7/07]
[Filed 7/13/07, Notice 5/23/07—published 8/1/07, effective 9/5/07]
[Filed 5/14/08, Notice 3/26/08—published 6/4/08, effective 7/9/08]
[Filed 11/12/08, Notice 9/24/08—published 12/3/08, effective 1/7/09]
[Filed ARC 8230B (Notice ARC 7969B, IAB 7/15/09), IAB 10/7/09, effective 11/11/09]
[Filed ARC 8660B (Notice ARC 8497B, IAB 1/27/10), IAB 4/7/10, effective 5/12/10]
[Filed ARC 9443B (Notice ARC 9342B, IAB 1/26/11), IAB 4/6/11, effective 8/1/11]
[Filed ARC 0062C (Notice ARC 0002C, IAB 2/8/12), IAB 4/4/12, effective 5/9/12]
[Filed ARC 0480C (Notice ARC 0377C, IAB 10/3/12), IAB 12/12/12, effective 1/16/13]
[Filed ARC 1404C (Notice ARC 1292C, IAB 1/22/14), IAB 4/2/14, effective 5/7/14]

CHAPTER 132
EMERGENCY MEDICAL SERVICES—SERVICE PROGRAM AUTHORIZATION

[Joint Rules pursuant to 147A.4]
[Prior to 7/29/87, Health Department[470] Ch 132]

641—132.1(147A) Definitions. For the purpose of these rules, the following definitions shall apply:

"Advanced emergency medical technician" or *"AEMT"* means an individual who has successfully completed a course of study based on the United States Department of Transportation's Advanced Emergency Medical Technician Instructional Guidelines (January 2009), has passed the National Registry of Emergency Medical Technicians (NREMT) practical and cognitive examinations for the AEMT, and is currently certified by the department as an AEMT.

"Ambulance" means any privately or publicly owned ground vehicle specifically designed, modified, constructed, equipped, staffed and used regularly to transport the sick, injured or otherwise incapacitated.

"Ambulance service" means any privately or publicly owned service program which utilizes ambulances in order to provide patient transportation and emergency medical services.

"Automated defibrillator" means any external semiautomatic device that determines whether defibrillation is required.

"Automated external defibrillator" or *"AED"* means an external semiautomated device that determines whether defibrillation is required.

"CEH" means "continuing education hour" which is based upon a minimum of 50 minutes of training per hour.

"Continuous quality improvement (CQI)" means a program that is an ongoing process to monitor standards at all EMS operational levels including the structure, process, and outcomes of the patient care event.

"CPR" means training and successful course completion in cardiopulmonary resuscitation, AED and obstructed airway procedures for all age groups according to recognized national standards.

"Critical care paramedic" or *"CCP"* means a currently certified paramedic specialist or paramedic who has successfully completed a critical care course of instruction approved by the department and has received endorsement from the department as a critical care paramedic.

"Critical care transport" or *"CCT"* means specialty care patient transportation, when medically necessary for a critically ill or injured patient needing critical care paramedic skills, provided by an authorized ambulance service that is approved by the department to provide critical care transportation and staffed by one or more critical care paramedics or other health care professional in an appropriate specialty area.

"Current course completion" means written recognition given for training and successful course completion of CPR with an expiration date or a recommended renewal date that exceeds the current date.

"Deficiency" means noncompliance with Iowa Code chapter 147A or these rules.

"Department" means the Iowa department of public health.

"Director" means the director of the Iowa department of public health.

"Direct supervision" means services provided by an EMS provider in a hospital setting or other health care entity in which health care is ordinarily performed when in the personal presence of a physician or under the direction of a physician who is immediately available or under the direction of a physician assistant or registered nurse who is immediately available and is acting consistent with adopted policies and protocols of a hospital or other health care entity.

"Emergency medical care" means such medical procedures as:

1. Administration of intravenous solutions.
2. Intubation.
3. Performance of cardiac defibrillation and synchronized cardioversion.
4. Administration of emergency drugs as provided by protocol.
5. Any medical procedure authorized by 641—subrule 131.3(3).

"Emergency medical care provider" means an individual who has been trained to provide emergency and nonemergency medical care at the EMR, EMT, AEMT, paramedic or other certification levels recognized by the department before 2011 and who has been issued a certificate by the department.

"Emergency medical responder" or *"EMR"* means an individual who has successfully completed a course of study based on the United States Department of Transportation's Emergency Medical Responder Instructional Guidelines (January 2009), has passed the NREMT practical and cognitive examinations for the EMR, and is currently certified by the department as an EMR.

"Emergency medical services" or *"EMS"* means an integrated medical care delivery system to provide emergency and nonemergency medical care at the scene or during out-of-hospital patient transportation in an ambulance.

"Emergency medical technician" or *"EMT"* means an individual who has successfully completed a course of study based on the United States Department of Transportation's Emergency Medical Technician Instructional Guidelines (January 2009), has passed the NREMT practical and cognitive examinations for the EMT, and is currently certified by the department as an EMT.

"Emergency medical technician-basic (EMT-B)" means an individual who has successfully completed the current United States Department of Transportation's Emergency Medical Technician-Basic curriculum and department enhancements, passed the department's approved written and practical examinations, and is currently certified by the department as an EMT-B.

"Emergency medical technician-intermediate (EMT-I)" means an individual who has successfully completed an EMT-intermediate curriculum approved by the department, passed the department's approved written and practical examinations, and is currently certified by the department as an EMT-I.

"Emergency medical technician-paramedic" or *"EMT-P"* means an individual who has successfully completed the United States Department of Transportation's EMT-Intermediate (1999) or the 1985 or earlier DOT EMT-P curriculum, has passed the department's approved written and practical examinations, and is currently certified by the department as an EMT-P.

"Emergency medical transportation" means the transportation, by ambulance, of sick, injured or otherwise incapacitated persons who require emergency medical care.

"EMS advisory council" means a council appointed by the director to advise the director and develop policy recommendations concerning regulation, administration, and coordination of emergency medical services in the state.

"EMS contingency plan" means an agreement or dispatching policy between two or more ambulance service programs that addresses how and under what circumstances patient transportation will be provided in a given service area when coverage is not possible due to unforeseen circumstances.

"EMS system" is any specific arrangement of emergency medical personnel, equipment, and supplies designed to function in a coordinated fashion.

"Endorsement" means an approval granted by the department authorizing an individual to serve as an EMS-I, EMS-E or CCP.

"First responder (FR)" means an individual who has successfully completed the current United States Department of Transportation's First Responder curriculum and department enhancements, passed the department's approved written and practical examinations, and is currently certified by the department as an FR.

"First response vehicle" means any privately or publicly owned vehicle which is used solely for the transportation of emergency medical care personnel and equipment to and from the scene of a medical or nonmedical emergency.

"Hospital" means any hospital licensed under the provisions of Iowa Code chapter 135B.

"Inclusion criteria" means criteria determined by the department and adopted by reference to determine which patients are to be included in the Iowa EMS service program registry or the trauma registry.

"Intermediate" means an emergency medical technician-intermediate.

"Iowa EMS Patient Registry Data Dictionary" means reportable data elements for all ambulance service responses and definitions determined by the department and adopted by reference.

"Medical direction" means direction, advice, or orders provided by a medical director, supervising physician, or physician designee (in accordance with written parameters and protocols) to emergency medical care personnel.

"Medical director" means any physician licensed under Iowa Code chapter 148, 150, or 150A who shall be responsible for overall medical direction of the service program and who has completed a medical director workshop, sponsored by the department, within one year of assuming duties.

"Mutual aid" means an agreement, preferably in writing, between two or more services that addresses how and under what circumstances each service will respond to a request for assistance in situations that exhaust available resources.

"Nonemergency transportation" means transportation that may be provided for those persons determined to need transportation only.

"Nontransport service" means any privately or publicly owned rescue or first response service program which does not provide patient transportation (except when no ambulance is available or in a disaster situation) and utilizes only rescue or first response vehicles to provide emergency medical care at the scene of an emergency.

"Off-line medical direction" means the monitoring of EMS providers through retrospective field assessments and treatment documentation review, critiques of selected cases with the EMS personnel, and statistical review of the system.

"On-line medical direction" means immediate medical direction provided directly to service program EMS providers, in accordance with written parameters and protocols, by the medical director, supervising physician or physician designee either on-scene or by any telecommunications system.

"Paramedic" means an individual who has successfully completed a course of study based on the United States Department of Transportation's Paramedic Instructional Guidelines (January 2009), has passed the NREMT practical and cognitive examinations for the paramedic, and is currently certified by the department as a paramedic.

"Paramedic specialist (PS)" means an individual who has successfully completed the current United States Department of Transportation's EMT-Paramedic curriculum or equivalent, passed the department's approved written and practical examinations, and is currently certified by the department as a paramedic specialist.

"Patient" means any individual who is sick, injured, or otherwise incapacitated.

"Patient care report (PCR)" means a computerized or written report that documents the assessment and management of the patient by the emergency care provider in the out-of-hospital setting.

"Physician" means any individual licensed under Iowa Code chapter 148, 150, or 150A.

"Physician assistant (PA)" means an individual licensed pursuant to Iowa Code chapter 148C.

"Physician designee" means any registered nurse licensed under Iowa Code chapter 152, or any physician assistant licensed under Iowa Code chapter 148C and approved by the board of physician assistant examiners. The physician designee acts as an intermediary for a supervising physician in accordance with written policies and protocols in directing the care provided by emergency medical care providers.

"Preceptor" means an individual who has been assigned by the training program, clinical facility or service program to supervise students while the students are completing their clinical or field experience. A preceptor must be an emergency medical care provider certified at the level being supervised or higher, or must be licensed as a registered nurse, physician's assistant or physician.

"Protocols" means written directions and orders, consistent with the department's standard of care, that are to be followed by an emergency medical care provider in emergency and nonemergency situations. Protocols must be approved by the service program's medical director and address the care of both adult and pediatric patients.

"Registered nurse (RN)" means an individual licensed pursuant to Iowa Code chapter 152.

"Reportable patient data" means data elements and definitions determined by the department and adopted by reference to be reported to the Iowa EMS service program registry or the trauma registry or a trauma care facility on patients meeting the inclusion criteria.

"Rescue vehicle" means any privately or publicly owned vehicle which is specifically designed, modified, constructed, equipped, staffed and used regularly for rescue or extrication purposes at the scene of a medical or nonmedical emergency.

"Service director" means an individual who is responsible for the operation and administration of a service program.

"Service program" or *"service"* means any medical care ambulance service or nontransport service that has received authorization by the department.

"Service program area" means the geographic area of responsibility served by any given ambulance or nontransport service program.

"Student" means any individual enrolled in a training program and participating in the didactic, clinical, or field experience portions.

"Supervising physician" means any physician licensed under Iowa Code chapter 148, 150, or 150A. The supervising physician is responsible for medical direction of emergency medical care personnel when such personnel are providing emergency medical care.

"Tiered response" means a rendezvous of service programs to allow the transfer of patient care.

"Training program" means an NCA-approved Iowa college, the Iowa law enforcement academy or an Iowa hospital approved by the department to conduct emergency medical care training.

"Transport agreement" means a written agreement between two or more service programs that specifies the duties and responsibilities of the agreeing parties to ensure appropriate transportation of patients in a given service area.

[**ARC 8661B**, IAB 4/7/10, effective 5/12/10; **ARC 9357B**, IAB 2/9/11, effective 3/16/11; **ARC 0063C**, IAB 4/4/12, effective 5/9/12]

641—132.2(147A) Authority of emergency medical care provider.

132.2(1) Rescinded IAB 2/7/01, effective 3/14/01.

132.2(2) An emergency medical care provider who holds an active certification issued by the department may:

a. Render via on-line medical direction emergency and nonemergency medical care in those areas for which the emergency medical care provider is certified, as part of an authorized service program:

(1) At the scene of an emergency;

(2) During transportation to a hospital;

(3) While in the hospital emergency department;

(4) Until patient care is directly assumed by a physician or by authorized hospital personnel; and

(5) During transfer from one medical care facility to another or to a private home.

b. Function in any hospital or any other entity in which health care is ordinarily provided only when under the direct supervision of a physician when:

(1) Enrolled as a student in and approved by a training program;

(2) Fulfilling continuing education requirements;

(3) Employed by or assigned to a hospital or other entity in which health care is ordinarily provided only when under the direct supervision of a physician as a member of an authorized service program, or in an individual capacity, by rendering lifesaving services in the facility in which employed or assigned pursuant to the emergency medical care provider's certification and under direct supervision of a physician, physician assistant, or registered nurse. An emergency medical care provider shall not routinely function without the direct supervision of a physician, physician assistant, or registered nurse. However, when the physician, physician assistant, or registered nurse cannot directly assume emergency care of the patient, the emergency medical care personnel may perform, without direct supervision, emergency medical care procedures for which certified, if the life of the patient is in immediate danger and such care is required to preserve the patient's life;

(4) Employed by or assigned to a hospital or other entity in which health care is ordinarily provided only when under the direct supervision of a physician, as a member of an authorized service program, or in an individual capacity, to perform nonlifesaving procedures for which certified and designated in a written job description. Such procedures may be performed after the patient is observed by and when the emergency medical care provider is under the supervision of the physician, physician assistant, or

registered nurse, including when the registered nurse is not acting in the capacity of a physician designee, and where the procedure may be immediately abandoned without risk to the patient.

132.2(3) When emergency medical care personnel are functioning in a capacity identified in subrule 132.2(2), paragraph *"a,"* they may perform emergency and nonemergency medical care without contacting a supervising physician or physician designee if written protocols have been approved by the service program medical director which clearly identify when the protocols may be used in lieu of voice contact.

132.2(4) Scope of practice.

a. Emergency medical care providers shall provide only those services and procedures as are authorized within the scope of practice for which they are certified.

b. Scope of Practice for Iowa EMS Providers (April 2013) is hereby incorporated and adopted by reference for emergency medical care providers. For any differences that may occur between the Scope of Practice adopted by reference and these administrative rules, the administrative rules shall prevail.

c. The department may grant a variance for changes to the Scope of Practice that have not yet been adopted by these rules. A variance to these rules may be granted by the department pursuant to 132.14(1).

d. Scope of Practice for Iowa EMS Providers is available through the Iowa Department of Public Health, Bureau of EMS, Lucas State Office Building, Des Moines, Iowa 50319-0075, or the bureau of EMS Web site (www.idph.state.ia.us/ems).

132.2(5) The department may approve other emergency medical care skills on a limited pilot project basis. Requests for a pilot project application shall be made to the department.

132.2(6) An emergency medical care provider who has knowledge of an emergency medical care provider, service program or training program that has violated Iowa Code chapter 147A or these rules shall report such information to the department within 30 days.

[**ARC 8230B**, IAB 10/7/09, effective 11/11/09; **ARC 0063C**, IAB 4/4/12, effective 5/9/12; **ARC 0480C**, IAB 12/12/12, effective 1/16/13; **ARC 1404C**, IAB 4/2/14, effective 5/7/14]

641—132.3(147A) Emergency medical care providers—requirements for enrollment in training programs. Rescinded IAB 2/9/00, effective 3/15/00.

641—132.4(147A) Emergency medical care providers—certification, renewal standards and procedures, and fees. Rescinded IAB 2/9/00, effective 3/15/00.

641—132.5(147A) Training programs—standards, application, inspection and approval. Rescinded IAB 2/9/00, effective 3/15/00.

641—132.6(147A) Continuing education providers—approval, record keeping and inspection. Rescinded IAB 2/9/00, effective 3/15/00.

641—132.7(147A) Service program—authorization and renewal procedures, inspections and transfer or assignment of certificates of authorization.

132.7(1) *General requirements for authorization and renewal of authorization.*

a. An ambulance or nontransport service in this state that desires to provide emergency medical care, in the out-of-hospital setting, shall apply to the department for authorization to establish a program utilizing certified emergency medical care providers for delivery of care at the scene of an emergency or nonemergency, during transportation to a hospital, during transfer from one medical care facility to another or to a private home, or while in the hospital emergency department and until care is directly assumed by a physician or by authorized hospital personnel. Application for authorization shall be made on forms provided by the department. Applicants shall complete and submit the forms to the department at least 30 days prior to the anticipated date of authorization.

b. To renew service program authorization, the service program shall continue to meet the requirements of Iowa Code chapter 147A and these rules. The renewal application shall be completed and submitted to the department at least 30 days before the current authorization expires.

c. Applications for authorization and renewal of authorization may be obtained upon request to: Iowa Department of Public Health, Bureau of Emergency Medical Services, Lucas State Office Building, Des Moines, Iowa 50319-0075, or the bureau of EMS Web site (www.idph.state.ia.us/ems).

d. The department shall approve an application when the department is satisfied that the program proposed by the application will be operated in compliance with Iowa Code chapter 147A and these administrative rules.

e. Service program authorization is valid for a period of three years from its effective date unless otherwise specified on the certificate of authorization or unless sooner suspended or revoked.

f. Service programs shall be fully operational upon the effective date and at the level specified on the certificate of authorization and shall meet all applicable requirements of Iowa Code chapter 147A and these rules. Deficiencies that are identified shall be corrected within a time frame determined by the department.

g. The certificate of authorization shall be issued to the service program based in the city named in the application. Any ambulance service or nontransport service that operates from more than one city shall apply for and, if approved, shall receive an inclusive authorization for each city of operation that is listed in the application.

h. Any service program owner in possession of a certificate of authorization as a result of transfer or assignment shall continue to meet all applicable requirements of Iowa Code chapter 147A and these rules. In addition, the new owner shall apply to the department for a new certificate of authorization within 30 days following the effective date of the transfer or assignment.

i. Service programs that acquire and maintain current status with a nationally recognized EMS service program accreditation entity that meets or exceeds Iowa requirements may be exempted from the service application/inspection process. A copy of the state service application and accreditation inspection must be filed with the department for approval.

132.7(2) *Out-of-state service programs.*

a. Service programs located in other states which wish to provide emergency medical care in Iowa must meet all requirements of Iowa Code chapter 147A and these rules and must be authorized by the department except when:

(1) Transporting patients from locations within Iowa to destinations outside of Iowa;

(2) Transporting patients from locations outside of Iowa to destinations within Iowa;

(3) Transporting patients to or from locations outside of Iowa that requires travel through Iowa;

(4) Responding to a request for mutual aid in this state; or

(5) Making an occasional EMS response to locations within Iowa and then transporting the patients to destinations within Iowa.

b. An out-of-state service program that meets any of the exception criteria established in 132.7(2) shall be authorized to provide emergency medical care by the state in which the program resides and shall provide the department with verification of current state authorization upon request.

132.7(3) *Air ambulances.* Rescinded IAB 4/7/10, effective 5/12/10.

132.7(4) *Service program inspections.*

a. The department shall inspect each service program at least once every three years. The department without prior notification may make additional inspections at times, places and under such circumstances as it deems necessary to ensure compliance with Iowa Code chapter 147A and these rules.

b. The department may request additional information from or may inspect the records of any service program which is currently authorized or which is seeking authorization to ensure continued compliance or to verify the validity of any information presented on the application for service program authorization.

c. The department may inspect the patient care records of a service program to verify compliance with Iowa Code chapter 147A and these rules.

d. No person shall interfere with the inspection activities of the department or its agents pursuant to Iowa Code section 135.36.

e. Interference with or failure to allow an inspection by the department or its agents may be cause for disciplinary action in reference to service program authorization.

132.7(5) *Temporary service program authorization.*

a. A temporary service program authorization may be issued to services that wish to operate during special events that may need emergency medical care coverage. Temporary authorization is valid for a period of 30 days unless otherwise specified on the certificate of authorization or unless sooner suspended or revoked. Temporary authorization shall apply to those requirements and standards for which the department is responsible. Applicants shall complete and submit the necessary forms to the department at least 30 days prior to the anticipated date of need.

b. The service shall meet applicable requirement of these rules, but may apply for a variance using the criteria outlined in rule 641—132.14(147A).

c. The service shall submit a justification which demonstrates the need for the temporary service program authorization.

d. The service shall submit a report, to the department, within 30 days after the expiration of the temporary authorization which includes as a minimum:

(1) Number of patients treated;

(2) Types of treatment rendered;

(3) Any operational or medical problems.

132.7(6) *Conditional service program authorization.* Rescinded IAB 2/6/02, effective 3/13/02.

[**ARC 8661B**, IAB 4/7/10, effective 5/12/10; **ARC 9357B**, IAB 2/9/11, effective 3/16/11]

641—132.8(147A) Service program levels of care and staffing standards.

132.8(1) A service program seeking ambulance authorization shall:

a. Apply for authorization at one of the following levels:

(1) EMT-B/EMT.

(2) EMT-I.

(3) AEMT.

(4) EMT-P.

(5) PS/Paramedic.

b. Maintain an adequate number of ambulances and personnel to provide 24-hour-per-day, 7-day-per-week coverage. Ambulances shall comply with paragraph 132.8(1)*"d."* The number of ambulances and personnel to be maintained shall be determined by the department, and shall be based upon, but not limited to, the following:

(1) Number of calls;

(2) Service area and population; and

(3) Availability of other services in the area.

c. Provide as a minimum, on each ambulance call, the following staff:

(1) One currently certified EMT-B or EMT.

(2) One currently licensed driver. The service shall document each driver's training in CPR (AED training not required), in emergency driving techniques and in the use of the service's communications equipment. Training in emergency driving techniques shall include:

1. A review of Iowa laws regarding emergency vehicle operations.

2. A review of the service program's driving policy for first response vehicles, ambulances, rescue vehicles or personal vehicles of an emergency medical care provider responding as a member of the service. The policy shall include, at a minimum:

- Frequency and content of driver's training requirements.
- Criteria for response with lights or sirens or both.
- Speed limits when responding with lights or sirens or both.
- Procedure of approaching intersections with lights or sirens or both.
- Notification process in the event of a motor vehicle collision involving a first response vehicle, ambulance, rescue vehicle or personal vehicle of an emergency medical care provider responding as a member of the service.

3. Behind-the-wheel driving of the service's first response vehicles, ambulances and rescue vehicles.

d. Submit an EMS contingency plan that will be put into operation when coverage pursuant to the 24/7 rule in paragraph 132.8(1)*"b"* is not possible due to unforeseen circumstances.

e. Report frequency of use of the contingency plan to the department upon request.

f. Seek approval from the department to provide nontransport coverage in addition to or in lieu of ambulance authorization.

g. Advertise or otherwise imply or hold itself out to the public as an authorized ambulance service only to the level of care maintained 24 hours per day, seven days a week.

h. Apply to the department to receive approval to provide critical care transportation based upon appropriately trained staff and approved equipment.

i. Unless otherwise established by protocol approved by the medical director, the emergency medical care provider with the highest level of certification (on the transporting service) shall attend the patient.

132.8(2) A service program seeking nontransport authorization shall:

a. Apply for authorization at one of the following levels:

(1) First responder/EMR.

(2) EMT-B/EMT.

(3) EMT-I.

(4) AEMT.

(5) EMT-P.

(6) PS/Paramedic.

b. For staffing purposes provide, as a minimum, a transport agreement.

c. Advertise or otherwise hold itself out to the public as an authorized nontransport service program only to the level of care maintained 24 hours per day, seven days a week.

d. Not be prohibited from transporting patients in an emergency situation when lack of transporting resources would cause an unnecessary delay in patient care.

132.8(3) Service program operational requirements. Ambulance and nontransport service programs shall:

a. Complete and maintain a patient care report concerning the care provided to each patient. Ambulance services shall provide, at a minimum, a PCR verbal report upon delivery of a patient to a receiving facility and shall provide a complete PCR within 24 hours to the receiving facility.

b. Utilize department protocols as the standard of care. The service program medical director may make changes to the department protocols provided the changes are within the EMS provider's scope of practice and within acceptable medical practice. A copy of the changes shall be filed with the department.

c. Ensure that personnel duties are consistent with the level of certification and the service program's level of authorization.

d. Maintain current personnel rosters and personnel files. The files shall include the names and addresses of all personnel and documentation that verifies EMS provider credentials including, but not limited to:

(1) Current provider level certification.

(2) Current course completions/certifications/endorsements as may be required by the medical director.

(3) PA and RN exception forms for appropriate personnel and verification that PA and RN personnel have completed the appropriate EMS level continuing education.

e. If requested by the department, notify the department in writing of any changes in personnel rosters.

f. Have a medical director and 24-hour-per-day, 7-day-per-week on-line medical direction available.

g. Ensure that the appropriate service program personnel respond as required in this rule and that they respond in a reasonable amount of time.

h. Notify the department in writing within seven days of any change in service director or ownership or control or of any reduction or discontinuance of operations.

i. Select a new or temporary medical director if for any reason the current medical director cannot or no longer wishes to serve in that capacity. Selection shall be made before the current medical director relinquishes the duties and responsibilities of that position.

j. Within seven days of any change of medical director, notify the department in writing of the selection of the new or temporary medical director who must have indicated in writing a willingness to serve in that capacity.

k. Not prevent a registered nurse or physician assistant from supplementing the staffing of an authorized service program provided equivalent training is documented pursuant to Iowa Code sections 147A.12 and 147A.13.

l. Not be authorized to utilize a manual defibrillator (except paramedic, paramedic specialist).

m. Implement a continuous quality improvement program that provides a policy to include as a minimum:

(1) Medical audits.

(2) Skills competency.

(3) Follow-up (loop closure/resolution).

n. Require physician assistants and registered nurses providing care pursuant to Iowa Code sections 147A.12 and 147A.13 to meet CEH requirements approved by the medical director.

o. Document an equipment maintenance program to ensure proper working condition and appropriate quantities.

p. Ensure a response to requests for assistance when dispatched by a public safety answering point within the primary service area identified in the service program's authorization application.

q. Submit reportable patient data identified in subrule 132.8(7) via electronic transfer. Data shall be submitted in a format approved by the department.

r. Submit reportable patient data identified in subrule 132.8(7) to the department for each calendar quarter. Reportable patient data shall be submitted no later than 90 days after the end of the quarter.

132.8(4) Equipment and vehicle standards. The following standards shall apply:

a. Ambulances placed into service after July 1, 2002, shall meet, as a minimum, the National Truck and Equipment Association's Ambulance Manufacture Division (AMD) performance specifications.

b. All EMS service programs shall carry equipment and supplies in quantities as determined by the medical director and appropriate to the service program's level of care and available certified EMS personnel and as established in the service program's approved protocols.

c. Pharmaceutical drugs and over-the-counter drugs may be carried and administered upon completion of training and pursuant to the service program's established protocols approved by the medical director.

d. All drugs shall be maintained in accordance with the rules of the state board of pharmacy examiners.

e. Accountability for drug exchange, distribution, storage, ownership, and security shall be subject to applicable state and federal requirements. The method of accountability shall be described in the written pharmacy agreement. A copy of the written pharmacy agreement shall be submitted to the department.

f. Each ambulance service program shall maintain a telecommunications system between the emergency medical care provider and the source of the service program's medical direction and other appropriate entities. Nontransport service programs shall maintain a telecommunications system between the emergency medical care provider and the responding ambulance service and other appropriate entities.

g. All telecommunications shall be conducted in an appropriate manner and on a frequency approved by the Federal Communications Commission and the department.

132.8(5) Preventative maintenance. Each ambulance service program shall document a preventative maintenance program to make certain that:

a. Vehicles are fully equipped and maintained in a safe operating condition. In addition:

(1) All ground ambulances shall be housed in a garage or other facility that prevents engine, equipment and supply freeze-up and windshield icing. An unobstructed exit to the street shall also be maintained;

(2) The garage or other facility shall be adequately heated or each response vehicle shall have permanently installed auxiliary heating units to sufficiently heat the engine and patient compartment; and

(3) The garage or other facility shall be maintained in a clean, safe condition free of debris or other hazards.

b. The exterior and interior of the vehicles are kept clean. The interior and equipment shall be cleaned after each use as necessary. When a patient with a communicable disease has been transported or treated, the interior and any equipment or nondisposable supplies coming in contact with the patient shall be thoroughly disinfected.

c. All equipment stored in a patient compartment is secured so that, in the event of a sudden stop or movement of the vehicle, the patient and service program personnel are not injured by moving equipment.

d. All airway, electrical and mechanical equipment is kept clean and in proper operating condition.

e. Compartments provided within the vehicles and the medical and other supplies stored therein are kept in a clean and sanitary condition.

f. All linens, airway and oxygen equipment or any other supplies or equipment coming in direct patient contact is of a single-use disposable type or cleaned, laundered or disinfected prior to reuse.

g. Freshly laundered blankets and linen or disposable linens are used on cots and pillows and are changed after each use.

h. Proper storage is provided for clean linen.

i. Soiled supplies shall be appropriately disposed of according to current biohazard practices.

132.8(6) Service program—incident and accident reports.

a. Incidents of fire or other destructive or damaging occurrences or theft of a service program ambulance, equipment, or drugs shall be reported to the department within 48 hours following the occurrence of the incident.

b. A copy of the motor vehicle accident report required under Iowa Code subsection 321.266(2), relating to the reporting of an accident resulting in personal injury, death or property damage, shall be submitted to the department within seven days following an accident involving a service program vehicle.

c. A service program must report the termination of an emergency medical care provider due to negligence, professional incompetency, unethical conduct or substance use to the department within ten days following the termination.

132.8(7) Adoption by reference. The Iowa EMS Patient Registry Data Dictionary identified in 641—paragraph 136.2(1)*"c"* is adopted and incorporated by reference for inclusion criteria and reportable patient data. For any differences which may occur between the adopted reference and this chapter, the administrative rules shall prevail.

a. The Iowa EMS Patient Registry Data Dictionary identified in 641—paragraph 136.2(1)*"c"* is available through the Iowa Department of Public Health, Bureau of Emergency Medical Services, Lucas State Office Building, Des Moines, Iowa 50319-0075, or the EMS bureau Web site (www.idph.state.ia.us/ems).

b. The department shall prepare compilations for release or dissemination on all reportable patient data entered into the EMS service program registry during the reporting period. The compilations shall include, but not be limited to, trends and patient care outcomes for local, regional, and statewide evaluations. The compilations shall be made available to all service programs submitting reportable patient data to the registry.

c. Access and release of reportable patient data and information.

(1) The data collected by and furnished to the department pursuant to this subrule are confidential records of the condition, diagnosis, care, or treatment of patients or former patients, including outpatients, pursuant to Iowa Code section 22.7. The compilations prepared for release or dissemination from the data collected are not confidential under Iowa Code section 22.7, subsection 2. However, information

which individually identifies patients shall not be disclosed, and state and federal law regarding patient confidentiality shall apply.

(2) The department may approve requests for reportable patient data for special studies and analysis provided the request has been reviewed and approved by the deputy director of the department with respect to the scientific merit and confidentiality safeguards, and the department has given administrative approval for the proposal. The confidentiality of patients and the EMS service program shall be protected.

(3) The department may require entities requesting the data to pay any or all of the reasonable costs associated with furnishing the reportable patient data.

d. To the extent possible, activities under this subrule shall be coordinated with other health data collection methods.

e. Quality assurance.

(1) For the purpose of ensuring the completeness and quality of reportable patient data, the department or authorized representative may examine all or part of the patient care report as necessary to verify or clarify all reportable patient data submitted by a service program.

(2) Review of a patient care report by the department shall be scheduled in advance with the service program and completed in a timely manner.

f. The director, pursuant to Iowa Code section 147A.4, may grant a variance from the requirements of these rules for any service program, provided that the variance is related to undue hardships in complying with this chapter.

132.8(8) The patient care report is a confidential document and shall be exempt from disclosure pursuant to Iowa Code subsection 22.7(2) and shall not be accessible to the general public. Information contained in these reports, however, may be utilized by any of the indicated distribution recipients and may appear in any document or public health record in a manner which prevents the identification of any patient or person named in these reports.

132.8(9) Implementation. The director may grant exceptions and variances from the requirements of this chapter for any ambulance or nontransport service. Exceptions or variations shall be reasonably related to undue hardships which existing services experience in complying with this chapter. Services requesting exceptions and variances shall be subject to other applicable rules adopted pursuant to Iowa Code chapter 147A.

[**ARC 8661B**, IAB 4/7/10, effective 5/12/10; **ARC 9357B**, IAB 2/9/11, effective 3/16/11; **ARC 9444B**, IAB 4/6/11, effective 5/11/11; **ARC 0063C**, IAB 4/4/12, effective 5/9/12]

641—132.9(147A) Service program—off-line medical direction.

132.9(1) The medical director shall be responsible for providing appropriate medical direction and overall supervision of the medical aspects of the service program and shall ensure that those duties and responsibilities are not relinquished before a new or temporary replacement is functioning in that capacity.

132.9(2) The medical director's duties include, but need not be limited to:

a. Developing, approving and updating protocols to be used by service program personnel that meet or exceed the minimum standard protocols developed by the department.

b. Developing and maintaining liaisons between the service, other physicians, physician designees, hospitals, and the medical community served by the service program.

c. Monitoring and evaluating the activities of the service program and individual personnel performance, including establishment of measurable outcomes that reflect the goals and standards of the EMS system.

d. Assessing the continuing education needs of the service and individual service program personnel and assisting them in the planning of appropriate continuing education programs.

e. Being available for individual evaluation and consultation to service program personnel.

f. Performing or appointing a designee to complete the medical audits required in subrule 132.9(4).

g. Developing and approving an applicable continuous quality improvement policy demonstrating type and frequency of review, including an action plan and follow-up.

h. Informing the medical community of the emergency medical care being provided according to approved protocols in the service program area.

i. Helping to resolve service operational problems.

j. Approving or removing an individual from service program participation.

132.9(3) Supervising physicians, physician designees, or other appointees as defined in the continuous quality improvement policy referenced in 132.9(2)*"g"* may assist the medical director by:

a. Providing medical direction.

b. Reviewing the emergency medical care provided.

c. Reviewing and updating protocols.

d. Providing and assessing continuing education needs for service program personnel.

e. Helping to resolve operational problems.

132.9(4) The medical director or other qualified designees shall randomly audit (at least quarterly) documentation of calls where emergency medical care was provided. The medical director shall randomly review audits performed by the qualified appointee. The audit shall be in writing and shall include, but need not be limited to:

a. Reviewing the patient care provided by service program personnel and remedying any deficiencies or potential deficiencies that may be identified regarding medical knowledge or skill performance.

b. Response time and time spent at the scene.

c. Overall EMS system response to ensure that the patient's needs were matched to available resources including, but not limited to, mutual aid and tiered response.

d. Completeness of documentation.

132.9(5) Rescinded IAB 2/6/02, effective 3/13/02.

132.9(6) On-line medical direction when provided through a hospital.

a. The medical director shall designate in writing at least one hospital which has established a written on-line medical direction agreement with the department. It shall be the medical director's responsibility to notify the department in writing of changes regarding this designation.

b. Hospitals signing an on-line medical direction agreement shall:

(1) Ensure that the supervising physicians or physician designees will be available to provide on-line medical direction via telecommunications on a 24-hour-per-day basis.

(2) Identify the service programs for which on-line medical direction will be provided.

(3) Establish written protocols for use by supervising physicians and physician designees who provide on-line medical direction.

(4) Administer a quality assurance program to review orders given. The program shall include a mechanism for the hospital and service program medical directors to discuss and resolve any identified problems.

c. A hospital which has a written medical direction agreement with the department may provide medical direction for any or all service program authorization levels and may also agree to provide backup on-line medical direction for any other service program when that service program is unable to contact its primary source of on-line medical direction.

d. Only supervising physicians or physician designees shall provide on-line medical direction. A physician assistant, registered nurse or emergency medical care provider (of equal or higher level) may relay orders to emergency medical care personnel, without modification, from a supervising physician. A physician designee may not deviate from approved protocols.

e. The hospital shall provide, upon request to the department, a list of supervising physicians and physician designees providing on-line medical direction.

f. Rescinded IAB 2/6/02, effective 3/13/02.

g. The department may verify a hospital's communications system to ensure compliance with the on-line medical direction agreement.

h. A supervising physician or physician designee who gives orders (directly or via communications equipment from some other point) to an emergency medical care provider is not subject

to criminal liability by reason of having issued the orders and is not liable for civil damages for acts or omissions relating to the issuance of the orders unless the acts or omissions constitute recklessness.

i. Nothing in these rules requires or obligates a hospital, supervising physician or physician designee to approve requests for orders received from emergency medical care personnel.

NOTE: Hospitals in other states may participate provided the applicable requirements of this subrule are met.

[**ARC 0063C**, IAB 4/4/12, effective 5/9/12]

641—132.10(147A) Complaints and investigations—denial, citation and warning, probation, suspension or revocation of service program authorization or renewal.

132.10(1) All complaints regarding the operation of authorized emergency medical care service programs, or those purporting to be or operating as the same, shall be reported to the department. The address is: Iowa Department of Public Health, Bureau of Emergency Medical Services, Lucas State Office Building, Des Moines, Iowa 50319-0075.

132.10(2) Complaints and the investigative process will be treated as confidential in accordance with Iowa Code section 22.7.

132.10(3) Service program authorization may be denied, issued a civil penalty not to exceed $1000, issued a citation and warning, placed on probation, suspended, revoked, or otherwise disciplined by the department in accordance with Iowa Code subsection 147A.5(3) for any of the following reasons:

a. Knowingly allowing the falsifying of a patient care report (PCR).

b. Failure to submit required reports and documents.

c. Delegating professional responsibility to a person when the service program knows that the person is not qualified by training, education, experience or certification to perform the required duties.

d. Practicing, condoning, or facilitating discrimination against a patient, student or employee based on race, ethnicity, national origin, color, sex, sexual orientation, age, marital status, political belief, religion, mental or physical disability diagnosis, or social or economic status.

e. Knowingly allowing sexual harassment of a patient, student or employee. Sexual harassment includes sexual advances, sexual solicitations, requests for sexual favors, and other verbal or physical conduct of a sexual nature.

f. Failure or repeated failure of the applicant or alleged violator to meet the requirements or standards established pursuant to Iowa Code chapter 147A or the rules adopted pursuant to that chapter.

g. Obtaining or attempting to obtain or renew or retain service program authorization by fraudulent means or misrepresentation or by submitting false information.

h. Engaging in conduct detrimental to the well-being or safety of the patients receiving or who may be receiving emergency medical care.

i. Failure to correct a deficiency within the time frame required by the department.

132.10(4) The department shall notify the applicant of the granting or denial of authorization or renewal, or shall notify the alleged violator of action to issue a citation and warning, place on probation or suspend or revoke authorization or renewal pursuant to Iowa Code sections 17A.12 and 17A.18. Notice of issuance of a denial, citation and warning, probation, suspension or revocation shall be served by restricted certified mail, return receipt requested, or by personal service.

132.10(5) Any requests for appeal concerning the denial, citation and warning, probation, suspension or revocation of service program authorization or renewal shall be submitted by the aggrieved party in writing to the department by certified mail, return receipt requested, within 20 days of the receipt of the department's notice. The address is: Iowa Department of Public Health, Bureau of Emergency Medical Services, Lucas State Office Building, Des Moines, Iowa 50319-0075. If such a request is made within the 20-day time period, the notice shall be deemed to be suspended. Prior to or at the hearing, the department may rescind the notice upon satisfaction that the reason for the denial, citation and warning, probation, suspension or revocation has been or will be removed. After the hearing, or upon default of the applicant or alleged violator, the administrative law judge shall affirm, modify or set aside the denial, citation and warning, probation, suspension or revocation. If no request

for appeal is received within the 20-day time period, the department's notice of denial, probation, suspension or revocation shall become the department's final agency action.

132.10(6) Upon receipt of an appeal that meets contested case status, the appeal shall be forwarded within five working days to the department of inspections and appeals pursuant to the rules adopted by that agency regarding the transmission of contested cases. The information upon which the adverse action is based and any additional information which may be provided by the aggrieved party shall also be provided to the department of inspections and appeals.

132.10(7) The hearing shall be conducted according to the procedural rules of the department of inspections and appeals found in 481—Chapter 10.

132.10(8) When the administrative law judge makes a proposed decision and order, it shall be served by restricted certified mail, return receipt requested, or delivered by personal service. That proposed decision and order then becomes the department's final agency action without further proceedings ten days after it is received by the aggrieved party unless an appeal to the director is taken as provided in subrule 132.10(9).

132.10(9) Any appeal to the director for review of the proposed decision and order of the administrative law judge shall be filed in writing and mailed to the director by certified mail, return receipt requested, or delivered by personal service within ten days after the receipt of the administrative law judge's proposed decision and order by the aggrieved party. A copy of the appeal shall also be mailed to the administrative law judge. Any request for an appeal shall state the reason for appeal.

132.10(10) Upon receipt of an appeal request, the administrative law judge shall prepare the record of the hearing for submission to the director. The record shall include the following:

a. All pleadings, motions, and rules.

b. All evidence received or considered and all other submissions by recording or transcript.

c. A statement of all matters officially noticed.

d. All questions and offers of proof, objections, and rulings thereon.

e. All proposed findings and exceptions.

f. The proposed decision and order of the administrative law judge.

132.10(11) The decision and order of the director becomes the department's final agency action upon receipt by the aggrieved party and shall be delivered by restricted certified mail, return receipt requested, or by personal service.

132.10(12) It is not necessary to file an application for a rehearing to exhaust administrative remedies when appealing to the director or the district court as provided in Iowa Code section 17A.19. The aggrieved party to the final agency action of the department who has exhausted all administrative remedies may petition for judicial review of that action pursuant to Iowa Code chapter 17A.

132.10(13) Any petition for judicial review of a decision and order shall be filed in the district court within 30 days after the decision and order becomes final. A copy of the notice of appeal shall be sent to the department by certified mail, return receipt requested, or by personal service. The address is: Bureau of Emergency Medical Services, Iowa Department of Public Health, Lucas State Office Building, Des Moines, Iowa 50319-0075.

132.10(14) The party who appeals a final agency action to the district court shall pay the cost of the preparation of a transcript of the contested case hearing for the district court.

132.10(15) Final decisions of the department relating to disciplinary proceedings may be transmitted to the appropriate professional associations, the news media or employer.

132.10(16) This rule is not subject to waiver or variance pursuant to 641—Chapter 178 or any other provision of law.

132.10(17) Emergency adjudicative proceedings.

a. Necessary emergency action. To the extent necessary to prevent or avoid immediate danger to the public health, safety, or welfare, and consistent with the Constitution and other provisions of law, the department may issue a written order in compliance with Iowa Code section 17A.18 to suspend a certificate in whole or in part, order the cessation of any continuing activity, order affirmative action, or take other action within the jurisdiction of the department by emergency adjudicative order.

b. Before issuing an emergency adjudicative order, the department shall consider factors including, but not limited to, the following:

(1) Whether there has been a sufficient factual investigation to ensure that the department is proceeding on the basis of reliable information;

(2) Whether the specific circumstances which pose immediate danger to the public health, safety or welfare have been identified and determined to be continuing;

(3) Whether the program required to comply with the emergency adjudicative order may continue to engage in other activities without posing immediate danger to the public health, safety or welfare;

(4) Whether imposition of monitoring requirements or other interim safeguards would be sufficient to protect the public health, safety or welfare; and

(5) Whether the specific action contemplated by the department is necessary to avoid the immediate danger.

c. Issuance of order.

(1) An emergency adjudicative order shall contain findings of fact, conclusions of law, and policy reasons to justify the determination of an immediate danger in the department's decision to take immediate action. The order is a public record.

(2) The written emergency adjudicative order shall be immediately delivered to the service program that is required to comply with the order by utilizing one or more of the following procedures:

1. Personal delivery.

2. Certified mail, return receipt requested, to the last address on file with the department.

3. Fax. Fax may be used as the sole method of delivery if the service program required to comply with the order has filed a written request that agency orders be sent by fax and has provided a fax number for that purpose.

(3) To the degree practicable, the department shall select the procedure for providing written notice that best ensures prompt, reliable delivery.

(4) Unless the written emergency adjudicative order is provided by personal delivery on the same day that the order issues, the department shall make reasonable immediate efforts to contact by telephone the service program that is required to comply with the order.

(5) After the issuance of an emergency adjudicative order, the department shall proceed as quickly as feasible to complete any proceedings that would be required if the matter did not involve an immediate danger.

(6) Issuance of a written emergency adjudicative order shall include notification of the date on which department proceedings are scheduled for completion. After issuance of an emergency adjudicative order, continuance of further department proceedings to a later date will be granted only in compelling circumstances upon application in writing unless the service program that is required to comply with the order is the party requesting the continuance.

[**ARC 8661B**, IAB 4/7/10, effective 5/12/10]

641—132.11(147A) Complaints and investigations—denial, citation and warning, probation, suspension, or revocation of emergency medical care personnel certificates or renewal. Rescinded IAB 2/9/00, effective 3/15/00.

641—132.12(147A) Complaints and investigations—denial, citation and warning, probation, suspension, or revocation of training program or continuing education provider approval or renewal. Rescinded IAB 2/9/00, effective 3/15/00.

641—132.13(147A) Complaints, investigations and appeals. Rescinded IAB 2/9/00, effective 3/15/00.

641—132.14(147A) Temporary variances.

132.14(1) If during a period of authorization there is some occurrence that temporarily causes a service program to be in noncompliance with these rules, the department may grant a temporary variance. Temporary variances to these rules (not to exceed six months in length per any approved request) may be

granted by the department to a currently authorized service program. Requests for temporary variances shall apply only to the service program requesting the variance and shall apply only to those requirements and standards for which the department is responsible.

132.14(2) To request a variance, the service program shall:

a. Notify the department verbally (as soon as possible) of the need to request a temporary variance. Submit to the department, within ten days after having given verbal notification to the department, a written explanation for the temporary variance request. The address and telephone number are Iowa Department of Public Health, Bureau of Emergency Medical Services, Lucas State Office Building, Des Moines, Iowa 50319-0075; (515)725-0326.

b. Cite the rule from which the variance is requested.

c. State why compliance with the rule cannot be maintained.

d. Explain the alternative arrangements that have been or will be made regarding the variance request.

e. Estimate the period of time for which the variance will be needed.

f. Rescinded IAB 2/2/05, effective 3/9/05.

132.14(3) Upon notification of a request for variance, the department shall take into consideration, but shall not be limited to:

a. Examining the rule from which the temporary variance is requested to determine if the request is appropriate and reasonable.

b. Evaluating the alternative arrangements that have been or will be made regarding the variance request.

c. Examining the effect of the requested variance upon the level of care provided to the general populace served.

d. Requesting additional information if necessary.

132.14(4) Preliminary approval or denial shall be provided verbally within 24 hours. Final approval or denial shall be issued in writing within ten days after having received the written explanation for the temporary variance request and shall include the reason for approval or denial. If approval is granted, the effective date and the duration of the temporary variance shall be clearly stated.

132.14(5) Rescinded, effective July 10, 1987.

132.14(6) Any request for appeal concerning the denial of a request for temporary variance shall be in accordance with the procedures outlined in rule 641—132.10(147A).

132.14(7) Rescinded IAB 2/3/93, effective 3/10/93.

641—132.15(147A) Transport options for fully authorized EMT-P, PS, and paramedic service programs.

132.15(1) Upon responding to an emergency call, ambulance or nontransport EMT-P, PS, and paramedic level services may make a determination at the scene as to whether emergency medical transportation or nonemergency transportation is needed. The determination shall be made by an EMT-P, paramedic or paramedic specialist and shall be based upon the nonemergency transportation protocol approved by the service program's medical director. When applying this protocol, the following criteria, as a minimum, shall be used to determine the appropriate transport option:

a. Primary assessment,

b. Focused history and physical examination,

c. Chief complaint,

d. Name, address and age, and

e. Nature of the call for assistance.

Emergency medical transportation shall be provided whenever any of the above criteria indicate that treatment should be initiated.

132.15(2) If treatment is not indicated, the service program may make arrangements for nonemergency transportation. If arrangements are made, the service program shall remain at the scene

until nonemergency transportation arrives. During the wait for nonemergency transportation, however, the ambulance or nontransport service may respond to an emergency.
[**ARC 0063C**, IAB 4/4/12, effective 5/9/12]

641—132.16(147A) Public access defibrillation. Rescinded IAB 2/2/05, effective 3/9/05.

These rules are intended to implement Iowa Code chapter 147A.

[Filed 5/11/79, Notice 4/4/79—published 5/30/79, effective 7/5/79]
[Filed emergency 3/27/81—published 4/15/81, effective 3/27/81]
[Filed without Notice 5/21/81—published 6/10/81, effective 7/15/81]
[Filed emergency 7/15/81—published 8/5/81, effective 7/15/81]
[Filed emergency 2/4/82—published 3/3/82, effective 3/1/82]
[Filed 10/27/82, Notice 9/1/82—published 11/24/82, effective 12/29/82]
[Filed emergency 12/16/82—published 1/5/83, effective 12/30/82]
[Filed emergency 9/20/83—published 10/12/83, effective 9/21/83]
[Filed 9/15/83, Notice 7/6/83—published 10/12/83, effective 11/16/83]
[Filed emergency 12/26/84—published 1/16/85, effective 12/31/84]
[Filed emergency after Notice 5/8/85, Notice 3/27/85—published 6/5/85, effective 5/17/85]
[Filed emergency 9/11/85—published 10/9/85, effective 9/11/85]
[Filed emergency 12/24/85—published 1/15/86, effective 12/31/85]
[Filed 5/30/86, Notice 3/26/86—published 6/18/86, effective 7/23/86]
[Filed emergency 7/1/86—published 7/16/86, effective 7/1/86][1]
[Filed 8/28/86, Notice 4/9/86—published 9/24/86, effective 10/29/86]
[Filed emergency 9/19/86—published 10/8/86, effective 9/19/86]
[Filed emergency 7/10/87—published 7/29/87, effective 7/10/87]
[Filed 7/10/87, Notice 2/11/87—published 7/29/87, effective 9/2/87]
[Filed emergency 1/30/89—published 2/22/89, effective 1/31/89]
[Filed emergency 5/10/89—published 5/31/89, effective 5/12/89]
[Filed 9/14/89, Notice 6/28/89—published 10/4/89, effective 11/8/89]
[Filed 6/22/90, Notice 4/18/90—published 7/11/90, effective 8/15/90]
[Filed 3/13/92, Notice 12/11/91—published 4/1/92, effective 5/6/92]
[Filed 1/15/93, Notice 9/30/92—published 2/3/93, effective 3/10/93]
[Filed 1/14/94, Notice 10/13/93—published 2/2/94, effective 3/9/94]
[Filed 9/20/95, Notice 8/2/95—published 10/11/95, effective 11/15/95]
[Filed 7/10/96, Notice 6/5/96—published 7/31/96, effective 9/4/96]
[Filed 9/16/96, Notice 7/31/96—published 10/9/96, effective 11/13/96]
[Filed emergency 1/23/98—published 2/11/98, effective 1/23/98]
[Filed 2/26/98, Notice 9/10/97—published 3/25/98, effective 4/29/98]
[Filed 3/18/98, Notice 1/14/98—published 4/8/98, effective 5/13/98]
[Filed 5/15/98, Notice 3/11/98—published 6/3/98, effective 7/8/98]
[Filed 11/10/98, Notice 9/23/98—published 12/2/98, effective 1/6/99]
[Filed 1/20/00, Notice 12/1/99—published 2/9/00, effective 3/15/00]
[Filed emergency 9/14/00—published 10/4/00, effective 9/14/00]
[Filed 1/18/01, Notice 11/29/00—published 2/7/01, effective 3/14/01]
[Filed 1/10/02, Notice 11/28/01—published 2/6/02, effective 3/13/02]
[Filed 1/13/05, Notice 11/24/04—published 2/2/05, effective 3/9/05][2]
[Filed emergency 7/13/05 after Notice 6/8/05—published 8/3/05, effective 7/13/05]
[Filed 7/12/06, Notice 5/24/06—published 8/2/06, effective 9/6/06]
[Filed 11/12/08, Notice 9/24/08—published 12/3/08, effective 1/7/09]
[Filed ARC 8230B (Notice ARC 7969B, IAB 7/15/09), IAB 10/7/09, effective 11/11/09]
[Filed ARC 8661B (Notice ARC 8498B, IAB 1/27/10), IAB 4/7/10, effective 5/12/10]
[Filed ARC 9357B (Notice ARC 9240B, IAB 11/17/10), IAB 2/9/11, effective 3/16/11]
[Filed ARC 9444B (Notice ARC 9343B, IAB 1/26/11), IAB 4/6/11, effective 5/11/11]

[Filed ARC 0063C (Notice ARC 0001C, IAB 2/8/12), IAB 4/4/12, effective 5/9/12]
[Filed ARC 0480C (Notice ARC 0377C, IAB 10/3/12), IAB 12/12/12, effective 1/16/13]
[Filed ARC 1404C (Notice ARC 1292C, IAB 1/22/14), IAB 4/2/14, effective 5/7/14]

[1] See IAB, Inspections and Appeals Department.

[2] Rescission of paragraph 132.14(2)*"f"* inadvertently omitted from 2/2/05 Supplement.

CHAPTER 133
WHITE FLASHING LIGHT AUTHORIZATION

641—133.1(321) Definitions. For the purpose of these rules, the following definitions shall apply:

"Ambulance" means ambulance as defined in 641—132.1(147A).

"Ambulance service" means ambulance service as defined in 641—132.1(147A).

"Authorization certificate" means a permit issued to an emergency medical care provider which authorizes the use of a white flashing light.

"Authorized vehicles" means any vehicles owned by members of the service program that are authorized by the department to use flashing white lights.

"Department" means Iowa department of public health.

"Emergency medical care provider" means emergency medical care provider as defined in 641—131.1(147A).

"First response vehicle" means first response vehicle as defined in 641—132.1(147A).

"Medical director" means medical director as defined in 641—132.1(147A).

"Member" means any individual utilized by an ambulance or nontransport service to provide emergency medical care.

"Nontransport service" means nontransport service as defined in 641—132.1(147A).

"Rescue vehicle" means rescue vehicle as defined in 641—132.1(147A).

"Service director" means service director as defined in 641—132.1(147A).

"Service program" or *"service"* means service program as defined in 641—132.1(147A).

"White light" means a white or clear rotating, flashing, or strobe lighting device utilized for identification purposes only. Any such lighting device shall not display a constant white or clear light to the rear of the vehicle.

[**ARC 0901C**, IAB 8/7/13, effective 9/11/13]

641—133.2(321) Purpose.

133.2(1) Flashing white lights may be used on emergency vehicles or other authorized vehicles utilized by emergency medical care providers and service programs for identification purposes only.

133.2(2) Flashing white lights shall be used only on an authorized vehicle and shall not be used except in any of the following circumstances:

a. When responding to an emergency in the line of duty requiring the services of the member.

b. When at the scene of an emergency.

c. When transporting a patient during a disaster situation.

133.2(3) Owners and operators of authorized vehicles are responsible for ensuring that the lighting devices are utilized in a safe manner. This shall include, but not be limited to, ensuring that lighting devices do not:

a. Obstruct the view of the vehicle operator.

b. Overburden the electrical system of the vehicle.

c. Interfere with the vision of the vehicle operator, passengers, or drivers of other vehicles.

133.2(4) Operators of authorized vehicles shall ensure that the authorization certificate is carried in the vehicle.

641—133.3(321) Application.

133.3(1) Authorization certificates shall be issued by the service director for service vehicles and vehicles owned by emergency medical care providers who are members in good standing with the service. Authorization certificates are available through the Iowa Department of Public Health, Bureau of EMS, Lucas State Office Building, Des Moines, Iowa 50319-0075, or the bureau of EMS Web site (www.idph.state.ia.us/ems). Vehicle authorization shall be limited to:

a. Vehicles owned or exclusively operated by the ambulance or nontransport service.

b. Vehicles owned or operated by emergency medical care provider members of the ambulance or nontransport service.

c. Vehicles owned or operated by the service program's medical director.

d. One authorization certificate per vehicle.

133.3(2) Nothing in these rules shall prevent the use of white flashing lights on vehicles which are authorized to use red or blue flashing lights.

133.3(3) The service director shall report the issuance of white light authorization certificates within 15 days to the department on forms approved by the department. Information required by the department shall include, but not be limited to:

a. Demonstrated necessity for authorization.

b. Vehicle liability insurance.

c. Current Iowa vehicle registration.

d. The member's current driver's license number, if the authorized vehicle is privately owned.

133.3(4) The service director shall provide, upon request of the department or its agents, proof of the information required in 133.3(3) for each authorization certificate issued.

133.3(5) The service director shall provide an informational sheet which explains the requirements for use of the white lights to each member who is issued an authorization certificate. The information sheet is available upon request from the Iowa Department of Public Health, Bureau of EMS, Lucas State Office Building, Des Moines, Iowa 50319-0075, or the bureau of EMS Web site (www.idph.state.ia.us/ems).

133.3(6) The service director shall encourage members operating authorized vehicles to complete a course in emergency driving techniques and the laws and rules governing emergency vehicle operation.

133.3(7) The authorization shall expire five years from the date issued unless sooner suspended or revoked.

133.3(8) The department may issue authorization certificates for vehicles used by employees of the department when responding to emergencies or disasters.

[**ARC 0901C**, IAB 8/7/13, effective 9/11/13]

641—133.4(321) Approval, denial, probation, suspension and revocation of authorization.

133.4(1) The service director or the department may approve or deny an application and the department may place on probation, suspend or revoke an authorization certificate if the service director or the department finds reason to believe that the applicant or certificate holder:

a. Has failed to meet all applicable requirements of these rules.

b. Has been convicted of a moving violation while using flashing white lights.

c. Has utilized a white flashing light without obtaining an authorization certificate.

d. Does not have a valid driver's license.

e. Does not have a current vehicle registration.

133.4(2) The authorization certificate shall be surrendered upon the request of the department or its agents.

133.4(3) An emergency medical care provider or service director who has knowledge of any emergency medical care provider or service program that has violated Iowa Code chapter 147A, Iowa Administrative Code 641—Chapter 132 or these rules shall, within 30 days, report that information to the department.

133.4(4) A denial, probation, suspension or revocation ordered by the department shall be effected, and may be appealed according to the provisions set forth in rule 641—133.5(321).

641—133.5(321) Appeal of denial, probation, or revocation of authorization.

133.5(1) Denial, probation, suspension or revocation shall be effected in accordance with the requirements of Iowa Code section 17A.12. Notice of denial, probation, suspension or revocation shall be served to the alleged violator by restricted certified mail, return receipt requested, or by personal service.

133.5(2) Any request for appeal concerning denial, probation, suspension or revocation shall be submitted by the aggrieved party in writing to the department by certified mail, return receipt requested, within 30 days of the receipt of the department's notice. The address is: Iowa Department of Public

Health, Bureau of Emergency Medical Services, Lucas State Office Building, Des Moines, Iowa 50319-0075. If the request is made within the 30-day time period, the notice shall be deemed to be suspended. Prior to or at the hearing, the department may rescind the notice upon satisfaction that the reason for the denial, probation, suspension or revocation has been or will be removed. If no request for appeal is received within the 30-day time period, the department's notice of denial, probation, suspension or revocation shall become the department's final agency action.

133.5(3) Upon receipt of an appeal that meets contested case status, the appeal shall be forwarded within five working days to the department of inspections and appeals pursuant to the rules adopted by that agency regarding the transmission of contested cases. The information upon which the adverse action is based and any additional information which may be provided by the aggrieved party shall also be provided to the department of inspections and appeals.

133.5(4) The hearing shall be conducted according to the procedural rules of the department of inspections and appeals found in 481—Chapter 4, Iowa Administrative Code.

133.5(5) When the administrative law judge makes a proposed decision and order, it shall be served by restricted certified mail, return receipt requested, or delivered by personal service. That proposed decision and order then becomes the department's final agency action without further proceedings ten days after it is received by the aggrieved party unless an appeal to the director is taken as provided in subrule 133.5(6).

133.5(6) Any appeal to the director for review of the proposed decision and order of the administrative law judge shall be filed in writing and mailed to the director by certified mail, return receipt requested, or delivered by personal service within ten days after the receipt of the administrative law judge's proposed decision and order by the aggrieved party. A copy of the appeal shall also be mailed to the administrative law judge. Any request for an appeal shall state the reason for appeal.

133.5(7) Upon receipt of an appeal request, the administrative law judge shall prepare the record of the hearing for submission to the director. The record shall include the following:

a. All pleadings, motions, and rules.

b. All evidence received or considered and all other submissions by recording or transcript.

c. A statement of all matters officially noticed.

d. All questions and offers of proof, objections and rulings on them.

e. All proposed findings and exceptions.

f. The proposed decision and order of the administrative law judge.

133.5(8) The decision and order of the director becomes the department's final agency action upon receipt by the aggrieved party and shall be delivered by restricted certified mail, return receipt requested, or by personal service.

133.5(9) It is not necessary to file an application for a rehearing to exhaust administrative remedies when appealing to the director or the district court as provided in Iowa Code section 17A.19. The aggrieved party to the final agency action of the department who has exhausted all administrative remedies may petition for judicial review of that action pursuant to Iowa Code chapter 17A.

133.5(10) Any petition for judicial review of a decision and order shall be filed in the district court within 30 days after the decision and order becomes final. A copy of the notice of appeal shall be sent to the department by certified mail, return receipt requested, or by personal service. The address is: Iowa Department of Public Health, Bureau of Emergency Medical Services, Lucas State Office Building, Des Moines, Iowa 50319-0075.

133.5(11) The party who appeals a final agency action to the district court shall pay the cost of the preparation of a transcript of the contested case hearing for the district court.

These rules are intended to implement Iowa Code section 321.423.

[Filed 7/11/90, Notice 5/30/90—published 8/8/90, effective 9/12/90]
[Filed 11/18/91, Notice 10/2/91—published 12/11/91, effective 1/15/92]
[Filed 9/20/95, Notice 8/2/95—published 10/11/95, effective 11/15/95]
[Filed 1/13/05, Notice 11/24/04—published 2/2/05, effective 3/9/05]
[Filed ARC 0901C (Notice ARC 0775C, IAB 5/29/13), IAB 8/7/13, effective 9/11/13]

CHAPTER 134
TRAUMA CARE FACILITY CATEGORIZATION AND VERIFICATION

641—134.1(147A) Definitions. For the purpose of these rules, the following definitions shall apply:

"Categorization" means a preliminary determination by the department that a hospital or emergency care facility is capable of providing trauma care at Level I, II, III or IV care capabilities.

"Certificate of verification" means a document awarded by the department that identifies a hospital or emergency care facility's level and term of verification as a trauma care facility.

"Department" means the Iowa department of public health.

"Director" means the director of the Iowa department of public health.

"Emergency care facility" means a physician's office, clinic, or other health care center which provides emergency medical care in conjunction with other primary care services.

"Emergency medical care provider" means emergency medical care provider as defined in 641—131.1(147A).

"Hospital" means any hospital licensed under Iowa Code chapter 135B.

"On-site verification survey" means an on-site survey conducted by the department to assess a hospital or emergency care facility's ability to meet the level of categorization requested.

"Trauma" means a single or multisystem life-threatening or limb-threatening injury, or an injury requiring immediate medical or surgical intervention or treatment to prevent death or permanent disability.

"Trauma care facility" means a hospital or emergency care facility which provides trauma care and has been verified by the department as having Resource (Level I), Regional (Level II), Area (Level III) or Community (Level IV) care capabilities and has been issued a certificate of verification pursuant to Iowa Code section 147A.23, subsection 2, paragraph *"c."*

"Trauma care system" means an organized approach to providing personnel, facilities, and equipment for effective and coordinated trauma care.

"Verification" means a process by which the department certifies a hospital or emergency care facility's capacity to provide trauma care in accordance with criteria established for Resource (Level I), Regional (Level II), Area (Level III) or Community (Level IV) trauma care facilities and these rules.

[**ARC 1079C**, IAB 10/2/13, effective 1/6/14]

641—134.2(147A) Trauma care facility categorization and verification. Categorization and verification of hospitals and emergency care facilities shall be made by the department based upon the hospitals' or emergency care facilities' resources available for providing trauma care services.

134.2(1) Categorization.

a. Categorization as a trauma care facility shall be determined by the department from self-reported information provided to the department by a hospital or emergency care facility through a self-assessment categorization application provided by the department.

b. Categorization applications shall be submitted by all hospitals. New hospitals shall submit a categorization application no later than 90 days after licensing by the department of inspections and appeals, health facilities division. Categorization applications may be submitted by emergency care facilities. New emergency care facilities may submit a categorization application no later than 90 days after opening or reopening.

c. Categorization applications may be obtained from the department upon written request to: Iowa Department of Public Health, Bureau of Emergency Medical Services, Lucas State Office Building, Des Moines, Iowa 50319-0075.

134.2(2) Categorization levels for trauma care facilities shall be identified as:

a. Resource (Level I).

b. Regional (Level II).

c. Area (Level III).

d. Community (Level IV).

134.2(3) Adoption by reference.

a. "Resources for Optimal Care of the Injured Patient" (2006) published by the American College of Surgeons Committee on Trauma is incorporated and adopted by reference for Resource (Level I) hospital and emergency care facility categorization criteria. "Iowa Trauma System Regional (Level II) Hospital and Emergency Care Facility Categorization Criteria" (2013) is incorporated and adopted by reference for Regional (Level II) hospital and emergency care facility categorization criteria. "Iowa Trauma System Area (Level III) Hospital and Emergency Care Facility Categorization Criteria" (2013) is incorporated and adopted by reference for Area (Level III) hospital and emergency care facility categorization criteria. "Iowa Trauma System Community (Level IV) Hospital and Emergency Care Facility Categorization Criteria" (2013) is incorporated and adopted by reference for Community (Level IV) hospital and emergency care categorization criteria. For any differences which may occur between the adopted references and these administrative rules, the administrative rules shall prevail.

b. "Iowa Trauma System Regional (Level II) Hospital and Emergency Care Facility Categorization Criteria" (2013), "Iowa Trauma System Area (Level III) Hospital and Emergency Care Facility Categorization Criteria" (2013) and "Iowa Trauma System Community (Level IV) Hospital and Emergency Care Facility Categorization Criteria" (2013) are available through the Iowa Department of Public Health, Bureau of EMS, Lucas State Office Building, Des Moines, Iowa 50319-0075, or the bureau of EMS Web site (www.idph.state.ia.us/ems).

134.2(4) Categorization shall not be construed to imply any guarantee on the part of the department as to the level of trauma care services available at a hospital or emergency care facility.

134.2(5) A hospital, emergency care facility, or trauma care facility may apply to the department for a change in level of categorization through submission of a self-assessment categorization application.

134.2(6) Verification. Verification of a trauma care facility shall be determined by the department upon successful completion of the categorization application and completion of a verification survey. All categorized hospitals and emergency care facilities shall be verified.

134.2(7) The department shall conduct a verification survey for categorized hospitals or emergency care facilities.

a. A verification survey shall assess the ability of the hospital or emergency care facility to meet criteria for the level of categorization pursuant to 134.2(3).

b. The department shall approve trauma care facility verification when the department is satisfied that the proposed facility will provide services and be operated in compliance with Iowa Code section 147A.23 and these administrative rules.

c. The department shall notify the applicant, in writing, as to the approval or denial of verification as a trauma care facility within 90 days after the completion of a verification survey.

d. Verification shall not be construed to imply any guarantee on the part of the department as to the level of trauma care services available at a hospital or emergency care facility.

e. Trauma care facility verification is valid for a period of three years from the effective date unless otherwise specified on the certificate of verification or unless sooner suspended or revoked.

f. Trauma care facilities shall be fully operational at their verified level upon the effective date specified on the certificate of verification. Trauma care facilities shall meet all requirements of Iowa Code section 147A.23 and these administrative rules.

g. As part of the verification and renewal process, the department may conduct periodic on-site reviews of the services and facilities of trauma care facilities.

h. Trauma care facilities that are unable to maintain their categorization or verification, or both, shall notify the department within 48 hours.

i. The director, pursuant to rule, may grant a variance from the requirements of rules adopted under this chapter for any hospital or emergency care facility provided that the variance is related to undue hardships in complying with this chapter or the rules adopted pursuant to this chapter.

j. Hospitals currently verified by the American College of Surgeons shall be accepted as equivalent for categorization and verification as a trauma care facility in Iowa provided that all policy, reporting, and administrative rules have been met. Documentation shall be provided to the department including, but not limited to, a current copy of the ACS verification certification, the hospital's

completed ACS verification application or a completed Self-Assessment Categorization Application (SACA).

134.2(8) Prohibited acts. A hospital or emergency care facility that imparts or conveys, or causes to be imparted or conveyed, that it is a trauma care facility, or that uses any other term to indicate or imply that the hospital or emergency care facility is a trauma care facility without having obtained a certificate of verification by the department is subject to civil penalty not to exceed $100 per day for each offense. The director may apply to the district court for a writ of injunction to restrain the use of the term "trauma care facility."

134.2(9) Nothing in Iowa Code section 147A.23 or these administrative rules shall be construed to restrict a hospital or emergency care facility from providing any services for which it is duly authorized.
[**ARC 9445B**, IAB 4/6/11, effective 5/11/11; **ARC 1079C**, IAB 10/2/13, effective 1/6/14]

641—134.3(147A) Complaints and investigations and appeals—denial, citation and warning, probation, suspension, and revocation of verification as a trauma care facility.

134.3(1) The department may deny verification as a trauma care facility or may give a citation and warning, place on probation, suspend, or revoke existing verification if the department finds reason to believe that the facility has not been or will not be operated in compliance with Iowa Code section 147A.23 and these administrative rules or that there is insufficient assurance of adequate protection for the public. The denial, citation and warning, period of probation, suspension, or revocation shall be effected and may be appealed in accordance with the requirements of Iowa Code section 17A.12.

134.3(2) All complaints regarding the operation of a trauma care facility, or those purporting to be or operating as the same, shall be reported to the department. The address is: Iowa Department of Public Health, Bureau of Emergency Medical Services, Lucas State Office Building, Des Moines, Iowa 50319-0075.

134.3(3) An EMS provider who has knowledge of a hospital, emergency care facility or trauma care facility that has violated Iowa Code section 147A.23, or these administrative rules, shall immediately report such information to the department. The address is: Iowa Department of Public Health, Bureau of Emergency Medical Services, Lucas State Office Building, Des Moines, Iowa 50319-0075.

134.3(4) Complaints and the investigative process shall be treated as confidential to the extent they are protected by Iowa Code section 22.7.

134.3(5) Complaint investigations may result in the department's issuance of a notice of denial, citation and warning, probation, suspension or revocation.

134.3(6) Notice of denial, citation and warning, probation, suspension or revocation shall be effected in accordance with the requirements of Iowa Code section 17A.12. Notice to the alleged violator of denial, citation and warning, probation, suspension, or revocation shall be served by certified mail, return receipt requested, or by personal service.

134.3(7) Any request for a hearing concerning the denial, citation and warning, probation, suspension or revocation shall be submitted by the aggrieved party in writing to the department by certified mail, return receipt requested, within 20 days of the receipt of the department's notice to take action. The address is: Iowa Department of Public Health, Bureau of Emergency Medical Services, Lucas State Office Building, Des Moines, Iowa 50319-0075. If the request is made within the 20-day time period, the notice to take action shall be deemed to be suspended pending the hearing. Prior to or at the hearing, the department may rescind the notice upon satisfaction that the reason for the denial, citation and warning, probation, suspension or revocation has been or will be removed. If no request for a hearing is received within the 20-day time period, the department's notice of denial, citation and warning, probation, suspension or revocation shall become the department's final agency action.

134.3(8) Upon receipt of a request for hearing, the request shall be forwarded within five working days to the department of inspections and appeals pursuant to the rules adopted by that agency regarding the transmission of contested cases. The information upon which the adverse action is based and any additional information which may be provided by the aggrieved party shall also be provided to the department of inspections and appeals.

134.3(9) The hearing shall be conducted according to the procedural rules of the department of inspections and appeals found in 481—Chapter 10, Iowa Administrative Code.

134.3(10) When the administrative law judge makes a proposed decision and order, it shall be served by certified mail, return receipt requested, or delivered by personal service. That proposed decision and order then becomes the department's final agency action without further proceedings ten days after it is received by the aggrieved party unless an appeal to the director is taken.

134.3(11) Any appeal to the director for review of the proposed decision and order of the administrative law judge shall be filed in writing and mailed to the director by certified mail, return receipt requested, or delivered by personal service within ten days after the receipt of the administrative law judge's proposed decision and order by the aggrieved party. A copy of the appeal shall also be mailed to the administrative law judge. Any request for an appeal shall state the reason for appeal.

134.3(12) Upon receipt of an appeal request, the administrative law judge shall prepare the record of the hearing for submission to the director. The record shall include the following:

a. All pleadings, motions, and rules.

b. All evidence received or considered and all other submissions by recording or transcript.

c. A statement of all matters officially noticed.

d. All questions and offers of proof, objections and rulings on them.

e. All proposed findings and exceptions.

f. The proposed decision and order of the administrative law judge.

134.3(13) The decision and order of the director becomes the department's final agency action upon receipt by the aggrieved party and shall be delivered by certified mail, return receipt requested, or by personal service.

134.3(14) It is not necessary to file an application for a rehearing to exhaust administrative remedies when appealing to the director or the district court as provided in Iowa Code section 17A.19. The aggrieved party to the final agency action of the department who has exhausted all administrative remedies may petition for judicial review of that action pursuant to Iowa Code chapter 17A.

134.3(15) Any petition for judicial review of a decision and order shall be filed in the district court within 30 days after the decision and order becomes final. A copy of the notice of appeal shall be sent to the department by certified mail, return receipt requested, or by personal service. The address is: Iowa Department of Public Health, Bureau of Emergency Medical Services, Lucas State Office Building, Des Moines, Iowa 50319-0075.

134.3(16) The party who appeals a final agency action to the district court shall pay the cost of the preparation of a transcript of the contested case hearing for the district court.

134.3(17) Final decisions of the department relating to disciplinary proceedings may be transmitted to the appropriate professional associations, news media or employer.

These rules are intended to implement Iowa Code section 147A.23.

[Filed 11/14/96, Notice 10/9/96—published 12/4/96, effective 1/8/97]
[Filed 1/18/01, Notice 11/15/00—published 2/7/01, effective 3/14/01]
[Filed 1/10/02, Notice 11/28/01—published 2/6/02, effective 3/13/02]
[Filed 1/13/05, Notice 11/24/04—published 2/2/05, effective 3/9/05]
[Filed ARC 9445B (Notice ARC 9344B, IAB 1/26/11), IAB 4/6/11, effective 5/11/11]
[Filed ARC 1079C (Notice ARC 0772C, IAB 5/29/13), IAB 10/2/13, effective 1/6/14]

CHAPTER 135
TRAUMA TRIAGE AND TRANSFER PROTOCOLS

641—135.1(147A) Definitions. For the purpose of these rules, the following definitions shall apply:

"Department" means the Iowa department of public health.

"Director" means the director of the Iowa department of public health.

"Out-of-Hospital Trauma Triage Destination Decision Protocol" means written directives to assist in the decision making, established and approved by the department, that address the method of transport and trauma care facility destination to be followed by the service program.

"Service program" or *"service"* means any medical care ambulance service or nontransport service that has received authorization by the department.

"Transfer" means the process of a patient being transferred from the scene of an injury to a trauma care facility or from one trauma care facility to another.

"Trauma care facility" means a hospital or emergency care facility which provides trauma care and has been verified by the department as having Resource (Level I), Regional (Level II), Area (Level III) or Community (Level IV) care capabilities and has been issued a certificate of verification pursuant to Iowa Code section 147A.23, subsection 2, paragraph *"c."*

"Trauma system advisory council" means an advisory council established pursuant to Iowa Code section 147A.24 to advise the department on issues and strategies to achieve optimal trauma care delivery throughout the state.

"Trauma triage and transfer" means to determine trauma care facility destination and mode of transportation.

"TSAC" means trauma system advisory council.

[**ARC 1080C**, IAB 10/2/13, effective 2/1/14]

641—135.2(147A) Trauma triage and transfer protocols.

135.2(1) Trauma triage and transfer protocols approved by the department shall be utilized to assist personnel from each service program and trauma care facility. This requirement shall not preclude service programs or trauma care facilities from making emergency revisions of the approved triage and transfer protocols when an incident overburdens medical care resources causing unnecessary delay in patient care.

a. Adoption by reference. The "Out-of-Hospital Trauma Triage Destination Decision Protocol" (Adult, 2013) and the "Out-of-Hospital Trauma Triage Destination Decision Protocol" (Pediatric, 2013) are incorporated by reference and adopted as the out-of-hospital trauma triage destination decision protocols. For any differences which may occur between the adopted references and these administrative rules, the administrative rules shall prevail.

b. The protocols adopted by reference in paragraph 135.2(1)*"a"* are available through the Iowa Department of Public Health, Bureau of EMS, Lucas State Office Building, Des Moines, Iowa 50319-0075, or the bureau of EMS Web site (www.idph.state.ia.us/ems).

c. Revisions and modifications to the protocols adopted by reference in paragraph 135.2(1)*"a"* may be made upon recommendation to the department from the trauma system advisory council (TSAC). Revisions and modifications shall be approved by the department.

d. The director, pursuant to rule, may grant a variance from the requirements of rules adopted under this chapter for any hospital, emergency care facility, or service program provided that the variance is related to undue hardships in complying with this chapter or the rules adopted pursuant to this chapter.

135.2(2) Reserved.

[**ARC 1080C**, IAB 10/2/13, effective 2/1/14]

641—135.3(147A) Offenses and penalties.

135.3(1) The department may deny verification as a trauma care facility or deny authorization as a service program or may give a citation and warning, place on probation, suspend, or revoke existing trauma care facility verification or service program authorization if the department finds reason to believe that the facility or service program has not been or will not be operated in compliance with Iowa Code

section 147A.27 and these administrative rules. The denial, citation and warning, period of probation, suspension, or revocation shall be effected and may be appealed in accordance with the requirements of Iowa Code section 17A.12.

135.3(2) All complaints regarding the operation of a trauma care facility or service program, or those purporting to be or operating as the same, shall be reported to the department. The address is: Iowa Department of Public Health, Bureau of Emergency Medical Services, Lucas State Office Building, Des Moines, Iowa 50319-0075.

135.3(3) Complaints and the investigative process shall be treated as confidential to the extent they are protected by Iowa Code section 22.7.

135.3(4) Complaint investigations may result in the department's issuance of a notice of denial, citation and warning, probation, suspension or revocation.

135.3(5) Notice of denial, citation and warning, probation, suspension or revocation shall be effected in accordance with the requirements of Iowa Code section 17A.12. Notice to the alleged violator of denial, citation and warning, probation, suspension, or revocation shall be served by certified mail, return receipt requested, or by personal service.

135.3(6) Any request for a hearing concerning the denial, citation and warning, probation, suspension or revocation shall be submitted by the aggrieved party in writing to the department by certified mail, return receipt requested, within 20 days of the receipt of the department's notice to take action. The address is: Iowa Department of Public Health, Bureau of Emergency Medical Services, Lucas State Office Building, Des Moines, Iowa 50319-0075. If the request is made within the 20-day time period, the notice to take action shall be deemed to be suspended pending the hearing. Prior to or at the hearing, the department may rescind the notice upon satisfaction that the reason for the denial, citation and warning, probation, suspension or revocation has been or will be removed. If no request for a hearing is received within the 20-day time period, the department's notice of denial, citation and warning, probation, suspension or revocation shall become the department's final agency action.

135.3(7) Upon receipt of a request for hearing, the request shall be forwarded within five working days to the department of inspections and appeals pursuant to the rules adopted by that agency regarding the transmission of contested cases. The information upon which the adverse action is based and any additional information which may be provided by the aggrieved party shall also be provided to the department of inspections and appeals.

135.3(8) The hearing shall be conducted according to the procedural rules of the department of inspections and appeals found in 481—Chapter 10, Iowa Administrative Code.

135.3(9) When the administrative law judge makes a proposed decision and order, it shall be served by certified mail, return receipt requested, or delivered by personal service. That proposed decision and order then becomes the department's final agency action without further proceedings ten days after it is received by the aggrieved party unless an appeal to the director is taken.

135.3(10) Any appeal to the director for review of the proposed decision and order of the administrative law judge shall be filed in writing and mailed to the director by certified mail, return receipt requested, or delivered by personal service within ten days after the receipt of the administrative law judge's proposed decision and order by the aggrieved party. A copy of the appeal shall also be mailed to the administrative law judge. Any request for an appeal shall state the reason for appeal.

135.3(11) Upon receipt of an appeal request, the administrative law judge shall prepare the record of the hearing for submission to the director. The record shall include the following:

a. All pleadings, motions, and rules.

b. All evidence received or considered and all other submissions by recording or transcript.

c. A statement of all matters officially noticed.

d. All questions and offers of proof, objections and rulings on them.

e. All proposed findings and exceptions.

f. The proposed decision and order of the administrative law judge.

135.3(12) The decision and order of the director becomes the department's final agency action upon receipt by the aggrieved party and shall be delivered by certified mail, return receipt requested, or personal service.

135.3(13) It is not necessary to file an application for a rehearing to exhaust administrative remedies when appealing to the director or the district court as provided in Iowa Code section 17A.19. The aggrieved party to the final agency action of the department who has exhausted all administrative remedies may petition for judicial review of that action pursuant to Iowa Code chapter 17A.

135.3(14) Any petition for judicial review of a decision and order shall be filed in the district court within 30 days after the decision and order becomes final. A copy of the notice of appeal shall be sent to the department by certified mail, return receipt requested, or by personal service. The address is: Iowa Department of Public Health, Bureau of Emergency Medical Services, Lucas State Office Building, Des Moines, Iowa 50319-0075.

135.3(15) The party who appeals a final agency action to the district court shall pay the cost of the preparation of a transcript of the contested case hearing for the district court.

135.3(16) Final decisions of the department relating to disciplinary proceedings may be transmitted to the appropriate professional associations, news media or employer.

These rules are intended to implement Iowa Code section 147A.23.

[Filed 11/14/96, Notice 10/9/96—published 12/4/96, effective 1/8/97]
[Filed 1/18/01, Notice 11/15/00—published 2/7/01, effective 3/14/01]
[Filed 1/10/02, Notice 11/28/01—published 2/6/02, effective 3/13/02]
[Filed 1/13/05, Notice 11/24/04—published 2/2/05, effective 3/9/05]
[Filed ARC 1080C (Notice ARC 0774C, IAB 5/29/13), IAB 10/2/13, effective 2/1/14]

CHAPTER 136
TRAUMA REGISTRY

641—136.1(147A) Definitions. For the purposes of these rules, the following definitions shall apply:

"Department" means the Iowa department of public health.

"Director" means the director of the Iowa department of public health.

"ICD9" means International Classification of Diseases, 9th Revision.

"Inclusion criteria" means criteria determined by the department and adopted by reference to determine which trauma patients are to be included in the trauma registry.

"Reportable patient data" means data elements and definitions determined by the department and adopted by reference to be reported to the trauma registry or reported to a trauma care facility on trauma patients meeting the inclusion criteria.

"Service program" or *"service"* means any medical care ambulance service, or nontransport service that has received authorization by the department.

"Trauma care facility" means a hospital or emergency care facility which provides trauma care and has been verified by the department as having Resource (Level I), Regional (Level II), Area (Level III) or Community (Level IV) care capabilities and has been issued a certificate of verification pursuant to Iowa Code section 147A.23, subsection 2, paragraph *"c."*

"Trauma patient" means a victim of an external cause of injury that results in major or minor tissue damage or destruction caused by intentional or unintentional exposure to thermal, mechanical, electrical or chemical energy, or by the absence of heat or oxygen (ICD9 Codes E800.0 - E999.9).

"Trauma registry" means the data repository operated by the department to collect and analyze reportable patient data on the incidence, severity, and causes of trauma, including the central registry for brain and spinal cord injuries (IAC 641—21.1(135)) and farm-related injuries.

641—136.2(147A) Trauma registry.

136.2(1) Adoption by reference.

a. "Iowa Trauma Patient Data Dictionary" (July 2005) is incorporated by reference for inclusion criteria and reportable patient data to be reported to the trauma registry or reported to a trauma care facility. For any differences which may occur between the adopted reference and this chapter, the administrative rules shall prevail.

b. "Iowa Trauma Patient Data Dictionary" is available through the Iowa Department of Public Health, Bureau of Emergency Medical Services, Lucas State Office Building, Des Moines, Iowa 50319-0075, or the bureau of EMS Web site (www.idph.state.ia.us/ems).

c. "Iowa EMS Patient Registry Data Dictionary" (August 2007) is incorporated by reference for inclusion criteria and reportable patient data to be reported to the department. For any differences which may occur between the adopted reference and this chapter, the administrative rules shall prevail.

d. "Iowa EMS Patient Registry Data Dictionary" is available through the Iowa Department of Public Health, Bureau of Emergency Medical Services, Lucas State Office Building, Des Moines, Iowa 50319-0075, or bureau of EMS Web site (www.idph.state.ia.us/ems).

136.2(2) A verified trauma care facility shall:

a. Submit reportable patient data identified in 136.2(1) via electronic transfer or in writing to the department. Data shall be submitted in a format approved by the department.

b. Submit reportable patient data identified in 136.2(1) to the department for each calendar quarter. Reportable patient data shall be submitted no later than 90 days after the end of the quarter.

c. Submit reportable patient data identified in 136.2(1) to the receiving trauma care facility upon delivery of the injured patient. Data shall be submitted in a format approved by the department.

136.2(3) A service program shall:

a. Submit reportable patient data identified in 136.2(1) via electronic transfer. Data shall be submitted in a format approved by the department.

b. Submit reportable patient data identified in 136.2(1) to the department for each calendar quarter. Reportable patient data shall be submitted no later than 90 days after the end of the quarter.

c. Submit reportable patient data identified in 136.2(1) to the receiving trauma care facility upon delivery of the injured patient. Data shall be submitted in a format approved by the department.

136.2(4) Reportable patient data compilations. The department shall prepare compilations for release or dissemination on all reportable patient data entered into the trauma registry during the reporting period. The compilations shall include, but not be limited to, trends and patient care outcomes for local, regional and statewide evaluations. The compilations shall be made available to all providers submitting reportable patient data to the registry.

136.2(5) Access and release of reportable patient data and information.

a. The data collected by and furnished to the department pursuant to this section are confidential records of the condition, diagnosis, care, or treatment of patients or former patients, including outpatients, pursuant to Iowa Code section 22.7. The compilations prepared for release or dissemination from the data collected are not confidential under Iowa Code section 22.7, subsection 2. However, information which individually identifies patients shall not be disclosed and state and federal law regarding patient confidentiality shall apply.

b. The department may approve requests for reportable patient data for special studies and analysis provided:

(1) The request has been reviewed and approved by the department with respect to the scientific merit and confidentiality safeguards; and

(2) The department has given administrative approval for the proposal.

(3) The confidentiality of patients and trauma care facilities is protected pursuant to Iowa Code section 22.7.

c. The department may require those requesting the data to pay any or all of the reasonable costs associated with furnishing the reportable patient data.

136.2(6) Data collection methods. To the extent possible, activities under this section shall be coordinated with other health data collection methods.

136.2(7) Quality assurance.

a. For the purpose of ensuring the completeness and quality of reportable patient data, the department or authorized representative may examine all or part of the patient's medical records as necessary to verify or clarify all reportable patient data submitted by a trauma care facility or a service program.

b. Review of a patient's medical record by the department shall be scheduled in advance with the trauma care facility or service program and completed in a timely manner.

c. The director, pursuant to rule, may grant a variance from the requirements of rules adopted under this chapter for any hospital, emergency care facility, or service program provided that the variance is related to undue hardships in complying with this chapter or the rules adopted pursuant to this chapter.

[**ARC 9444B**, IAB 4/6/11, effective 5/11/11]

641—136.3(147A) Offenses and penalties.

136.3(1) The department may deny verification as a trauma care facility or deny authorization as a service program or may give a citation and warning, place on probation, suspend, or revoke existing trauma care facility verification or service program authorization if the department finds reason to believe that the facility or service program has not been or will not be operated in compliance with Iowa Code section 147A.26 and these administrative rules. The denial, citation and warning, period of probation, suspension, or revocation shall be effected and may be appealed in accordance with the requirements of Iowa Code section 17A.12.

136.3(2) All complaints regarding the operation of a trauma care facility or service program or those purporting to be or operating as the same, shall be reported to the department. The address is: Iowa Department of Public Health, Bureau of Emergency Medical Services, Lucas State Office Building, Des Moines, Iowa 50319-0075.

136.3(3) Complaints and the investigative process shall be treated as confidential to the extent they are protected by Iowa Code section 22.7.

136.3(4) Complaint investigations may result in the department's issuance of a notice of denial, citation and warning, probation, suspension or revocation.

136.3(5) Notice of denial, citation and warning, probation, suspension or revocation shall be effected in accordance with the requirements of Iowa Code section 17A.12. Notice to the alleged violator of denial, citation and warning, probation, suspension, or revocation shall be served by certified mail, return receipt requested, or by personal service.

136.3(6) Any request for a hearing concerning the denial, citation and warning, probation, suspension or revocation shall be submitted by the aggrieved party in writing to the department by certified mail, return receipt requested, within 20 days of the receipt of the department's notice to take action. The address is: Iowa Department of Public Health, Bureau of Emergency Medical Services, Lucas State Office Building, Des Moines, Iowa 50319-0075. If the request is made within the 20-day time period, the notice to take action shall be deemed to be suspended pending the hearing. Prior to or at the hearing, the department may rescind the notice upon satisfaction that the reason for the denial, citation and warning, probation, suspension or revocation has been or will be removed. If no request for a hearing is received within the 20-day time period, the department's notice of denial, citation and warning, probation, suspension or revocation shall become the department's final agency action.

136.3(7) Upon receipt of a request for hearing, the request shall be forwarded within five working days to the department of inspections and appeals pursuant to the rules adopted by that agency regarding the transmission of contested cases. The information upon which the adverse action is based and any additional information which may be provided by the aggrieved party shall also be provided to the department of inspections and appeals.

136.3(8) The hearing shall be conducted according to the procedural rules of the department of inspections and appeals found in 481—Chapter 10, Iowa Administrative Code.

136.3(9) When the administrative law judge makes a proposed decision and order, it shall be served by certified mail, return receipt requested, or delivered by personal service. That proposed decision and order then becomes the department's final agency action without further proceedings ten days after it is received by the aggrieved party unless an appeal to the director is taken.

136.3(10) Any appeal to the director for review of the proposed decision and order of the administrative law judge shall be filed in writing and mailed to the director by certified mail, return receipt requested, or delivered by personal service within ten days after the receipt of the administrative law judge's proposed decision and order by the aggrieved party. A copy of the appeal shall also be mailed to the administrative law judge. Any request for an appeal shall state the reason for appeal.

136.3(11) Upon receipt of an appeal request, the administrative law judge shall prepare the record of the hearing for submission to the director. The record shall include the following:

a. All pleadings, motions, and rules.

b. All evidence received or considered and all other submissions by recording or transcript.

c. A statement of all matters officially noticed.

d. All questions and offers of proof, objections and rulings on them.

e. All proposed findings and exceptions.

f. The proposed decision and order of the administrative law judge.

136.3(12) The decision and order of the director becomes the department's final agency action upon receipt by the aggrieved party and shall be delivered by certified mail, return receipt requested, or personal service.

136.3(13) It is not necessary to file an application for a rehearing to exhaust administrative remedies when appealing to the director or the district court as provided in Iowa Code section 17A.19. The aggrieved party to the final agency action of the department who has exhausted all administrative remedies may petition for judicial review of that action pursuant to Iowa Code chapter 17A.

136.3(14) Any petition for judicial review of a decision and order shall be filed in the district court within 30 days after the decision and order becomes final. A copy of the notice of appeal shall be sent to the department by certified mail, return receipt requested, or by personal service. The address is: Iowa Department of Public Health, Bureau of Emergency Medical Services, Lucas State Office Building, Des Moines, Iowa 50319-0075.

136.3(15) The party who appeals a final agency action to the district court shall pay the cost of the preparation of a transcript of the contested case hearing for the district court.

136.3(16) Final decisions of the department relating to disciplinary proceedings may be transmitted to the appropriate professional associations, news media or employer.

These rules are intended to implement Iowa Code section 147A.26.

[Filed 11/14/96, Notice 10/9/96—published 12/4/96, effective 1/8/97]
[Filed 1/13/05, Notice 11/24/04—published 2/2/05, effective 3/9/05]
[Filed 9/13/07, Notice 8/1/07—published 10/10/07, effective 11/14/07]
[Filed ARC 9444B (Notice ARC 9343B, IAB 1/26/11), IAB 4/6/11, effective 5/11/11]

CHAPTER 137
TRAUMA EDUCATION AND TRAINING

641—137.1(147A) Definitions. For the purpose of these rules, the following definitions shall apply:

"ACLS course" means advanced cardiac life support course.

"Advanced emergency medical technician" or *"AEMT"* means advanced emergency medical technician as defined in 641—131.1(147A).

"Advanced registered nurse practitioner" or *"ARNP"* means a nurse pursuant to 655—7.1(152) with current licensure as a registered nurse in Iowa who is registered in Iowa to practice in an advanced role. The ARNP is prepared for an advanced role by virtue of additional knowledge and skills gained through a formal advanced practice education program of nursing in a specialty area approved by the board. In the advanced role, the nurse practices nursing assessment, intervention, and management within the boundaries of the nurse-client relationship. Advanced nursing practice occurs in a variety of settings within an interdisciplinary health care team, which provide for consultation, collaborative management, or referral. The ARNP may perform selected medically delegated functions when a collaborative practice agreement exists.

"Advanced trauma life support course®" or *"ATLS®"* means a course for physicians with an emphasis on the first hour of initial assessment and primary management of the injured patient, starting at the point in time of injury continuing through initial assessment, life-saving intervention, reevaluation, stabilization, and transfer when appropriate.

"Department" means the Iowa department of public health.

"Director" means the director of the Iowa department of public health.

"Emergency care facility" means a physician's office, clinic, or other health care center which provides emergency medical care in conjunction with other primary care services.

"Emergency medical care provider" means emergency medical care provider as defined in 641—131.1(147A).

"Emergency medical services" or *"EMS"* means emergency medical services as defined in 641—132.1(147A).

"Emergency medical technician" or *"EMT"* means emergency medical technician as defined in 641—131.1(147A).

"Emergency medical technician-ambulance" or *"EMT-A"* means emergency medical technician-ambulance as defined in 641—131.1(147A).

"Emergency medical technician-basic" or *"EMT-B"* means emergency medical technician-basic as defined in 641—131.1(147A).

"Emergency medical technician-defibrillation" or *"EMT-D"* means emergency medical technician-defibrillation as defined in 641—131.1(147A).

"Emergency medical technician-intermediate" or *"EMT-I"* means emergency medical technician-intermediate as defined in 641—131.1(147A).

"Emergency medical technician-paramedic" or *"EMT-P"* means emergency medical technician-paramedic as defined in 641—131.1(147A).

"First responder" or *"FR"* means first responder as defined in 641—131.1(147A).

"First responder-defibrillation" or *"FR-D"* means first responder-defibrillation as defined in 641—131.1(147A).

"Formal education" means education in standardized educational settings with a curriculum.

"Hospital" means a facility licensed under Iowa Code chapter 135B, or comparable emergency care facility located and licensed in another state.

"Licensed practical nurse" or *"LPN"* means an individual licensed pursuant to Iowa Code chapter 152.

"NRP course" means neonatal resuscitation provider course.

"PALS course" means pediatric advanced life support course.

"Paramedic" means paramedic as defined in 641—131.1(147A).

"Paramedic specialist" or *"PS"* means paramedic specialist as defined in 641—131.1(147A).

"Physician" means an individual licensed under Iowa Code chapter 148, 150 or 150A.

"Physician assistant" or *"PA"* means an individual licensed pursuant to Iowa Code chapter 148C.

"Practitioner" means a person who practices medicine or one of the associated health care professions.

"Registered nurse" or *"RN"* means an individual licensed pursuant to Iowa Code chapter 152.

"Service program" or *"service"* means service program as defined in 641—132.1(147A).

"Trauma" means a single or multisystem life-threatening or limb-threatening injury, or an injury requiring immediate medical or surgical intervention or treatment to prevent death or disability.

"Trauma care facility" means a hospital or emergency care facility which provides trauma care and has been verified by the department as having Resource (Level I), Regional (Level II), Area (Level III) or Community (Level IV) care capabilities and has been issued a certificate of verification pursuant to Iowa Code section 147A.23, subsection 2, paragraph *"c."*

"Trauma care system" means an organized approach to providing personnel, facilities, and equipment for effective and coordinated trauma care.

"Trauma nursing course objectives" means the trauma nursing course objectives recommended to the department by the trauma system advisory council and adopted by reference in these rules.

"Trauma patient" means a victim of an external cause of injury that results in major or minor tissue damage or destruction caused by intentional or unintentional exposure to thermal, mechanical, electrical or chemical energy, or by the absence of heat or oxygen (ICD9 Codes E800.0 - E999.9).

"Trauma system advisory council" or *"TSAC"* means the council established by the department pursuant to Iowa Code section 147A.24 to advise the department on issues and strategies to achieve optimal trauma care delivery throughout the state, to assist the department in the implementation of an Iowa trauma care plan, to develop criteria for the categorization of all hospitals and emergency care facilities according to their trauma care capabilities, to develop a process for verification of the trauma care capacity of each facility and the issuance of a certificate of verification, to develop standards for medical direction, trauma care, triage and transfer protocols, and trauma registries, to promote public information and education activities for injury prevention, to review rules adopted under this division, and to make recommendations to the director for changes to further promote optimal trauma care.

"Trauma team" means a team of multidisciplinary health care providers established and defined by a hospital or emergency care facility that provides trauma care commensurate with the level of trauma care facility verification.

"Verification" means a process by which the department certifies a hospital or emergency care facility's capacity to provide trauma care in accordance with criteria established for Resource (Level I), Regional (Level II), Area (Level III) or Community (Level IV) trauma care facilities and these rules.

[**ARC 1081C**, IAB 10/2/13, effective 11/6/13]

641—137.2(147A) Initial trauma education for Iowa's trauma system. Initial trauma education is required of physicians, physician assistants, advanced registered nurse practitioners, registered nurses, and licensed practical nurses who are identified or defined as trauma team members by a trauma care facility and who participate directly in the initial resuscitation of the trauma patient.

137.2(1) General requirements for initial trauma education.

a. Completion of initial trauma education shall be done within three years of the trauma care facility's initial verification or within one year of the practitioner's joining the trauma care facility's trauma team.

b. Trauma nursing course objectives (2007) are incorporated and adopted by reference for all trauma care facilities. For any differences which may occur between the adopted references and these administrative rules, the administrative rules shall prevail.

c. Trauma nursing course objectives are available from the Department of Public Health, Bureau of Emergency Medical Services, Lucas State Office Building, Des Moines, Iowa 50319-0075, or the bureau of EMS Web site (www.idph.state.ia.us/ems).

137.2(2) Specific requirements for initial trauma education for each provider category are as follows:

a. Physicians, PAs and ARNPs: current ATLS® certification.

b. RNs and LPNs: successful completion of trauma nursing course objectives (2007) recommended by TSAC.

[**ARC 1081C**, IAB 10/2/13, effective 11/6/13]

641—137.3(147A) Continuing trauma education for Iowa's trauma system. Continuing trauma education is required every four years of physicians, physician assistants, advanced registered nurse practitioners, registered nurses, and licensed practical nurses who are identified or defined as trauma team members by a trauma care facility and who participate directly in the initial resuscitation of the trauma patient.

137.3(1) Topics for all or part of the continuing trauma education hours may be recommended to the department by TSAC based on trauma care system outcomes.

137.3(2) General requirements for continuing trauma education.

a. Sixteen hours of the required continuing trauma education hours may be informal, determined and approved by a trauma care facility from any of the following:

1. Multidisciplinary trauma case reviews;
2. Multidisciplinary trauma conferences;
3. Multidisciplinary trauma mortality and morbidity reviews;
4. Multidisciplinary trauma committee meetings;
5. Trauma peer review meetings;
6. Any trauma care facility committee meeting with a focus on trauma care evaluation; and
7. Critical care education such as ACLS course, PALS course, NRP course, or equipment inservices.

b. Eight hours of the required continuing trauma education hours shall be obtained through any formalized continuing education programs.

137.3(3) Specific requirements for each provider category are as follows:

a. Physicians: 24 hours of continuing trauma education is required, with a minimum of 8 hours as formal education.

(1) Physicians who treat trauma patients in the emergency department but are not board-certified in emergency medicine must maintain current ATLS® certification.

(2) Surgeons who are not board-certified in general surgery must maintain current ATLS® certification.

(3) The designated trauma service medical director, regardless of board certification, must maintain current ATLS® certification.

b. PA and ARNP: 24 hours of continuing trauma education is required, with a minimum of 8 hours as formal education. Of the 8 hours of formal education, current ATLS® certification is required.

c. RN and LPN: 16 hours of continuing trauma education is required, with a minimum of 4 hours as formal education based upon the trauma nursing course objectives (2007) recommended by TSAC.

137.3(4) Continuing trauma education is required of certified emergency medical care providers every two years as follows:

a. EMR, FR or FR-D: 2 continuing education hours.

b. EMT, EMT-A, EMT-B, EMT-D: 4 continuing education hours.

c. AEMT, EMT-I: 4 continuing education hours.

d. EMT-P, PS, Paramedic: 6 continuing education hours.

[**ARC 1081C**, IAB 10/2/13, effective 11/6/13]

641—137.4(147A) Offenses and penalties.

137.4(1) The department may deny verification as a trauma care facility or deny authorization as a service program, may give a citation and warning, or may place on probation, suspend, or revoke existing trauma care facility verification or service program authorization if the department finds reason to believe that the facility or service program has not been or will not be operated in compliance with Iowa Code sections 147A.27 and these administrative rules. The denial, citation and warning, period of probation, suspension, or revocation shall be effected and may be appealed in accordance with the requirements of Iowa Code section 17A.12.

137.4(2) All complaints regarding the operation of a trauma care facility or service program, or those purporting to be or operating as the same, shall be reported to the department. The address is Iowa Department of Public Health, Bureau of Emergency Medical Services, Lucas State Office Building, Des Moines, Iowa 50319-0075.

137.4(3) Complaints and the investigative process shall be treated as confidential to the extent they are protected by Iowa Code section 22.7.

137.4(4) Complaint investigations may result in the department's issuance of a notice of denial, citation and warning, probation, suspension or revocation.

137.4(5) Notice of denial, citation and warning, probation, suspension or revocation shall be effected in accordance with the requirements of Iowa Code section 17A.12. Notice to the alleged violator of denial, citation and warning, probation, suspension, or revocation shall be served by certified mail, return receipt requested, or by personal service.

137.4(6) Any request for a hearing concerning the denial, citation and warning, probation, suspension or revocation shall be submitted by the aggrieved party in writing to the department by certified mail, return receipt requested, within 20 days of the receipt of the department's notice to take action. The address is Iowa Department of Public Health, Bureau of Emergency Medical Services, Lucas State Office Building, Des Moines, Iowa 50319-0075. If the request is made within the 20-day time period, the notice to take action shall be deemed to be suspended pending the hearing. Prior to or at the hearing, the department may rescind the notice upon satisfaction that the reason for the denial, citation and warning, probation, suspension or revocation has been or will be removed. If no request for a hearing is received within the 20-day time period, the department's notice of denial, citation and warning, probation, suspension or revocation shall become the department's final agency action.

137.4(7) A request for a hearing shall be forwarded within five working days of receipt of the request to the department of inspections and appeals pursuant to the rules adopted by that agency regarding the transmission of contested cases. The information upon which the adverse action is based and any additional information which may be provided by the aggrieved party shall also be provided to the department of inspections and appeals.

137.4(8) The hearing shall be conducted according to the procedural rules of the department of inspections and appeals found in 481—Chapter 10, Iowa Administrative Code.

137.4(9) When the administrative law judge makes a proposed decision and order, it shall be served by certified mail, return receipt requested, or delivered by personal service. That proposed decision and order then becomes the department's final agency action without further proceedings ten days after it is received by the aggrieved party unless an appeal to the director is taken.

137.4(10) Any appeal to the director for review of the proposed decision and order of the administrative law judge shall be filed in writing and mailed to the director by certified mail, return receipt requested, or delivered by personal service within ten days after the receipt of the administrative law judge's proposed decision and order by the aggrieved party. A copy of the appeal shall also be mailed to the administrative law judge. Any request for an appeal shall state the reason for appeal.

137.4(11) Upon receipt of an appeal request, the administrative law judge shall prepare the record of the hearing for submission to the director. The record shall include the following:

a. All pleadings, motions, and rules.

b. All evidence received or considered and all other submissions by recording or transcript.

c. A statement of all matters officially noticed.

d. All questions and offers of proof, objections and rulings on them.

e. All proposed findings and exceptions.

f. The proposed decision and order of the administrative law judge.

137.4(12) The decision and order of the director becomes the department's final agency action upon receipt by the aggrieved party and shall be delivered by certified mail, return receipt requested, or personal service.

137.4(13) It is not necessary to file an application for a rehearing to exhaust administrative remedies when appealing to the director or the district court as provided in Iowa Code section 17A.19. The

aggrieved party to the final agency action of the department who has exhausted all administrative remedies may petition for judicial review of that action pursuant to Iowa Code chapter 17A.

137.4(14) Any petition for judicial review of a decision and order shall be filed in the district court within 30 days after the decision and order becomes final. A copy of the notice of appeal shall be sent to the department by certified mail, return receipt requested, or by personal service. The address is Department of Public Health, Bureau of Emergency Medical Services, Lucas State Office Building, Des Moines, Iowa 50319-0075.

137.4(15) The party who appeals a final agency action to the district court shall pay the cost of the preparation of a transcript of the contested case hearing for the district court.

137.4(16) Final decisions of the department relating to disciplinary proceedings may be transmitted to the appropriate professional associations, news media or employer.

These rules are intended to implement Iowa Code chapter 147A.

[Filed 5/14/99, Notice 2/10/99—published 6/2/99, effective 7/7/99]
[Filed 1/13/05, Notice 11/24/04—published 2/2/05, effective 3/9/05]
[Filed ARC 1081C (Notice ARC 0773C, IAB 5/29/13), IAB 10/2/13, effective 11/6/13]

CHAPTER 138
TRAUMA SYSTEM EVALUATION QUALITY IMPROVEMENT COMMITTEE

641—138.1(147A) Definitions. For the purpose of these rules, the following definitions shall apply:

"Department" means the Iowa department of public health.

"Emergency medical care provider" means an individual who has been trained to provide emergency and nonemergency medical care at the first responder, EMT-basic, EMT-intermediate, EMT-paramedic, paramedic specialist or other certification levels recognized by the department before 1984 and who has been issued a certificate by the department.

"SEQIC" means system evaluation quality improvement committee established by the department pursuant to Iowa Code section 147A.25 to develop, implement, and conduct trauma care system evaluation, quality assessment, and quality improvement.

"Trauma care system" means an organized approach to providing personnel, facilities, and equipment for effective and coordinated trauma care.

641—138.2(147A) System evaluation quality improvement committee (SEQIC). The system evaluation quality improvement committee shall develop, implement, and conduct trauma care system evaluation, quality assessment, and quality improvement in accordance with Iowa Code chapter 147A, Iowa Administrative Code 641—Chapter 191 and these rules.

138.2(1) *Duties.* The scope of the duties of SEQIC shall include, but not be limited to:

a. Analyzing trauma-related information and data provided by the department.

b. Evaluating the standards for trauma care in Iowa's trauma system.

c. Evaluating the effectiveness of Iowa's trauma care system.

d. Recommending quality improvement strategies related to trauma care.

e. Designing and recommending corrective action plans to the department for trauma care and trauma system improvement.

f. Monitoring, evaluating, and reevaluating trauma system-related corrective action plans implemented by the department.

g. Assisting with development of an annual SEQIC report.

138.2(2) *Membership.* The director, pursuant to Iowa Code section 147A.25, shall appoint members of SEQIC.

Pursuant to Iowa Administrative Code rule 641—191.6(135), SEQIC may establish a subcommittee of medical care consultants whose expertise is needed. Subcommittees are subject to the approval of the department.

138.2(3) *Meetings/member attendance.* SEQIC shall establish bylaws pursuant to Iowa Administrative Code rule 641—191.5(135).

138.2(4) *Confidentiality.*

a. The data collected by and furnished to the department pursuant to Iowa Code section 147A.26 shall not be a public record under Iowa Code chapter 22. The confidentiality of patients is to be protected, and the laws of this state shall apply with regard to patient confidentiality.

b. Proceedings, records, and reports reviewed or developed pursuant to Iowa Code section 147A.25 constitute peer review records under Iowa Code section 147.135 and are not subject to discovery by subpoena or admissible as evidence. All information and documents received from a hospital or emergency care facility under Iowa Code chapter 147A shall be confidential pursuant to Iowa Code section 272C.6, subsection 4.

c. SEQIC may enter into a closed session proceeding pursuant to Iowa Code section 21.5.

d. All committee and subcommittee members shall sign a confidentiality agreement not to divulge or discuss information obtained during a SEQIC closed session proceeding. Subcommittee members may be present only for that portion of the closed session proceeding pertaining to their expertise.

e. The signed confidentiality statements shall be kept on file at the department.

138.2(5) *Documentation.* The department, pursuant to Iowa Code section 21.3, shall keep minutes of open session proceedings. The department, pursuant to Iowa Code section 21.5, shall also maintain minutes and tape recordings of closed session proceedings.

a. The department, at the close of each meeting, shall collect all confidential documents. No copies of confidential documents may be made or possessed by committee or subcommittee members.

b. The department shall approve all correspondence and communication generated by SEQIC prior to dissemination.

These rules are intended to implement Iowa Code chapter 147A.

[Filed 9/17/99, Notice 6/30/99—published 10/6/99, effective 11/10/99]
[Filed 1/13/05, Notice 11/24/04—published 2/2/05, effective 3/9/05]

CHAPTER 139
IOWA LAW ENFORCEMENT EMERGENCY CARE PROVIDER

641—139.1(147A) Definitions. For the purpose of these rules, the following definitions shall apply:

"AED" means automated external defibrillator.

"CEHs" means "continuing education hours" which are based upon a minimum of 50 minutes of training per hour.

"Continuing education" means training approved by the department which is obtained by a certified Iowa law enforcement emergency care provider to maintain, improve, or expand relevant skills and knowledge and to satisfy renewal of certification requirements.

"Course completion date" means the date of the final classroom session of an Iowa law enforcement emergency care provider course.

"CPR" means training and successful course completion in cardiopulmonary resuscitation, AED and obstructed airway procedures for all age groups according to recognized national standards.

"Department" means the Iowa department of public health.

"Director" means the director of the Iowa department of public health.

"Emergency medical services" or *"EMS"* means an integrated medical care delivery system to provide emergency and nonemergency medical care at the scene or during out-of-hospital patient transportation in an ambulance.

"EMS instructor" means an individual who has successfully completed an EMS instructor curriculum approved by the department, and is currently certified by the department as an EMS-I.

"Iowa law enforcement emergency care provider" or *"ILEECP"* means an individual who is certified by the Iowa law enforcement academy as an Iowa peace officer, and has successfully completed an emergency care provider curriculum approved by the department, and who is currently certified by the department as an Iowa law enforcement emergency care provider.

"Iowa law enforcement training program" means the law enforcement academy or a law enforcement training program approved by the department to conduct ILEECP emergency medical care training.

"Law enforcement AED service program" means a recognized Iowa law enforcement agency that has trained its peace officers in the use of an AED and has registered with the department as a law enforcement AED service program.

"Student" means any individual enrolled in a training program and participating in the didactic, clinical, or field experience portions.

641—139.2(147A) Authority of Iowa law enforcement emergency care provider. Iowa law enforcement emergency care provider may perform skills identified in the Iowa law enforcement emergency care provider curriculum approved by the department, plus the skill of automated defibrillation for which training can be documented.

641—139.3(147A) Iowa law enforcement emergency care providers—requirements for enrollment in training programs. To be enrolled in an Iowa law enforcement training program, an applicant shall:

1. Be at least 18 years of age at the time of enrollment.
2. Have a high school diploma or its equivalent.
3. Be able to speak, write and read English.

641—139.4(147A) Iowa law enforcement emergency care providers—certification, renewal standards and procedures, and fees.

139.4(1) *Application and examination.*

a. Applicants shall complete an EMS student registration form at the beginning of the course. EMS student registration forms are provided by the department.

b. EMS student registration forms shall be forwarded to the department by the training program no later than two weeks after the beginning of the course.

c. Upon satisfactory completion of the course and all training program requirements, including successful completion of the state certifying practical examination, the student shall be recommended by the training program to take the state certification written examinations. Candidates for state certification are not eligible to continue functioning as students in the clinical and field setting. State certification must be obtained to perform appropriate skills.

d. The practical examination shall be administered by the training program using the standards and forms provided by the department. The training program shall notify the department at least two weeks prior to the administration of a practical examination.

e. To be eligible to take the written examination, the student shall first pass the practical examination.

f. The student shall submit an EMS certification application form. EMS certification application forms are provided by the department.

g. When a student's EMS student registration or EMS certification application is referred to the department for investigation, the student shall not be certified until approved by the department.

h. The certifying written examinations shall be administered at times and places determined by the department.

i. No oral certification examinations shall be permitted; however, candidates may be eligible for appropriate accommodations. Contact the Iowa Department of Public Health, Bureau of Emergency Medical Services, Lucas State Office Building, Des Moines, Iowa 50319-0075.

j. Practical examination fees shall be determined by the training program.

k. A student who fails the practical certification examination shall be required to repeat only those stations which were failed and shall have two additional opportunities to attain a passing score. The student may repeat the failed examination stations on the same day as determined by the training program. A student who fails a practical station for the third time shall be required to repeat the entire course in order to be eligible for certification. If a student fails the written examination, the practical examination remains valid for a 12-month period from the date it was successfully completed.

l. A student who fails to attain the appropriate overall score on the written certification examination shall have two additional opportunities to complete the entire examination and attain a passing score. Required overall passing score is 70 percent.

m. All examination attempts shall be completed within one year of the initial course completion date. If an individual is unable to complete the testing within one year due to medical reasons, an extension may be granted upon submission of a signed statement from a physician and approval by the department.

n. Examination scores shall be confidential except that they may be released to the training program which provided the training or released in a manner which does not permit the identification of an individual.

139.4(2) *Renewal of certification.*

a. A certificate shall be valid for two years from issuance unless specified otherwise on the certificate or unless sooner suspended or revoked.

b. All continuing education requirements shall be completed during the certification period prior to the certificate's expiration date. Failure to complete the continuing education requirements prior to the expiration date shall result in an expired certification.

c. The application for renewal of certification shall be submitted to the department within the 90 days prior to the expiration date. Failure to submit a renewal application to the department within the 90 days prior to the expiration date (based upon the postmark date) shall cause the current certification to expire. Iowa law enforcement emergency care providers shall not function on an expired certification.

An individual who completes the required continuing education during the certification period, but fails to submit the application for renewal of certification within 90 days prior to the expiration date, shall be required to submit a late fee of $30 to obtain renewal of certification.

d. An individual who has not completed the required continuing education during the certification period and is seeking to reinstate an expired certificate shall complete a refresher course approved by the department and pass the practical and written certification examinations.

e. If an individual is unable to complete the required continuing education during the certification period due to an illness or injury, an extension of certification may be issued upon submission of a signed statement from a physician and approval by the department.

139.4(3) *Renewal standards.* To be eligible for renewal, the certificate holder shall:

a. Have signed and submitted an application for renewal of certification, provided by the department, within the 90 days prior to the certificate's expiration date.

b. Have a current CPR course completion card or a signed and dated statement from a recognized CPR instructor that documents current course completion in CPR.

c. Have completed four continuing education hours during the certification period including a minimum of one hour in the following topics:

Infectious diseases
Abuse (child and dependent adult)
Trauma emergencies
Medical emergencies

d. Notify the department of a change in address.

e. Maintain a file containing documentation of continuing education hours accrued during each certification period and retain this file for four years from the end of each certification period.

A group of individual certificate holders will be audited for each certification period and will be required to submit verification of continuing education compliance within 45 days of the request. If audited, the following information must be provided: date of program, program sponsor number, title of program, and number of hours approved. Certificate holders audited will be chosen in a random manner or at the discretion of the bureau of EMS. Falsifying reports or failure to comply with the audit request may result in formal disciplinary action.

641—139.5(147A) Iowa law enforcement training programs.

139.5(1) *Curricula.*

a. The training program shall use the course curricula approved by the department for an Iowa law enforcement emergency care provider and shall include, as a minimum, the following course components:

1. Twenty-four hours of classroom instruction.
2. Practical and written examinations.
3. Clinical and field experience as may be required by the training program.

b. The training program may waive portions of the required training by documenting equivalent training and what portions of the course have been waived for equivalency.

c. An individual currently certified by the department as an emergency medical care provider, pursuant to 641—Chapter 132, may request Iowa law enforcement emergency care provider certification. Such a request must be made in writing to the department with documentation of credentials as an Iowa peace officer.

139.5(2) *Staff.*

a. Course coordinators, outreach course coordinators, and primary instructor(s) used for the Iowa law enforcement emergency care provider course shall be currently certified by the department as EMS instructors.

b. Practical examination evaluators used for the Iowa law enforcement emergency care provider course shall attend a workshop sponsored by the department.

641—139.6(147A) Law enforcement AED service program authorization. A recognized Iowa law enforcement agency that desires to allow its peace officers to use an AED may register with the department to provide AED coverage. The purpose of this rule is to allow law enforcement agencies to train their peace officers in the use of the automated external defibrillator and to provide AED coverage when appropriately trained personnel are available. This rule is intended to enhance and supplement the local EMS system with nontraditional early defibrillation agencies.

139.6(1) Training requirements. Law enforcement personnel wishing to provide AED coverage as part of an Iowa law enforcement agency shall have current course completion in:

a. Adult CPR, including one rescuer CPR, foreign body airway obstruction, rescue breathing, recovery position, and activating the EMS system; and

b. A nationally recognized AED course approved by the department.

139.6(2) Iowa law enforcement AED service program—registration, guidelines, and standards. An Iowa law enforcement agency may register with the department to provide AED coverage. Iowa law enforcement AED service programs seeking registration with the department shall:

a. Complete the department's AED service program registration form.

b. Provide an AED liaison who shall be responsible for supervision of the AED service program.

c. Implement a policy for periodic maintenance of the AED.

d. Ensure that the service program's AED providers maintain AED and CPR skill competency.

e. Identify which authorized Iowa ambulance service program(s) will provide patient transportation.

f. Reregister with the department every five years.

139.6(3) Complaints and investigations shall be conducted as with any complaint received against an EMS service program, applying rule 641 IAC 132.10(147A).

These rules are intended to implement Iowa Code chapter 147A.

[Filed 5/16/97, Notice 3/12/97—published 6/4/97, effective 7/9/97]
[Filed emergency 1/23/98—published 2/11/98, effective 1/23/98]
[Filed 3/18/98, Notice 1/14/98—published 4/8/98, effective 5/13/98]
[Filed 11/10/98, Notice 9/23/98—published 12/2/98, effective 1/6/99]
[Filed emergency 9/14/00—published 10/4/00, effective 9/14/00]
[Filed 1/13/05, Notice 11/24/04—published 2/2/05, effective 3/9/05]

CHAPTER 140
EMERGENCY MEDICAL SERVICES SYSTEM DEVELOPMENT GRANTS FUND

641—140.1(135) Definitions. For the purpose of these rules, the following definitions shall apply:

"Ambulance service" means ambulance service as defined in 641—132.1(147A).

"CEHs" means CEH as defined in 641—131.1(147A).

"Continuing education" means continuing education as defined in 641—131.1(147A).

"County EMS association" means a countywide group of EMS providers and various agency and organization representatives and consumers who provide leadership for the local EMS system on needs and objectives. The county EMS association should also include representatives of services located in a neighboring county if service is provided on a regular basis to residents of the county receiving funding.

"Department" means the Iowa department of public health.

"Director" means the director of the Iowa department of public health.

"Emergency medical care provider" means emergency medical care provider as defined in 641—131.1(147A).

"Emergency medical services" or *"EMS"* means an integrated medical care delivery system to provide emergency and nonemergency medical care at the scene or during out-of-hospital patient transportation in an ambulance.

"EMS course" means a course for emergency medical care personnel pursuant to Iowa Code section 147A.4, subsection 2.

"Fiscal year" means the 12-month period beginning July 1 and ending June 30.

"Infrastructure" means those elements that make up an EMS system.

"Nontransport service" means nontransport service as defined in 641—132.1(147A).

"Regional EMS council" means a multicounty nonprofit corporation whose purpose is to facilitate EMS development on a regional basis.

"Service program" means service program as defined in 641—131.1(147A).

"Strategic plan" means a document produced via a multiagency effort to evaluate and define needs and goals to improve the local EMS system.

"Training" means EMS-related courses designed and intended for EMS providers and includes any item used in training including, but not limited to, slides, films, mannequins, emergency care devices, books and other items pertinent and necessary for training purposes.

[**ARC 0756C**, IAB 5/29/13, effective 7/3/13]

641—140.2(135) Purpose. The EMS system development grant is intended to supplement EMS funds at the regional, county or local level to promote EMS system development.

641—140.3(135) County EMS associations. Each county shall have a county EMS association, council or board to develop and maintain the countywide EMS system strategic plan and to provide leadership on related EMS system development funding needs and objectives.

641—140.4(135) County EMS system development grants. Grants for EMS system development proposals at the regional, county, and local level are available through a grant process from the department to county boards of supervisors or local boards of health for equipment, training, and support of infrastructure needs as identified in the countywide EMS strategic plan and the department system standards. County boards of supervisors or local boards of health may not take any administrative fee from these funds to support their work under this rule. County recipients of funds may subcontract work under this agreement to a county EMS association. Funds for training will be used to train members of a service program that provides service on a regular basis to residents of the county being funded. Funds for equipment require a $1 match of regional, county, or local funds for each $1 of EMS system development grant funds.

140.4(1) *Eligible costs.* Costs which are eligible for EMS system development grant expenditures as defined in the request for proposal (RFP) include:

a. Training.

(1) Reimbursement for initial training tuition, fees and materials up to an amount that is the lowest fee charged by the training entity following successful completion of an EMS course. Practical and written examination fees may also be included.

(2) Payment of continuing education tuition, fees and materials. Education provided by an EMS service program for the general public is an allowable expense.

(3) Payment for EMS training aids.

b. Other equipment as defined by the RFP.

c. Infrastructure support.

(1) Development and enhancement of EMS systems.

(2) Office equipment and supplies necessary to coordinate a countywide EMS system.

(3) Personnel services for staffing to provide countywide continuous quality improvement and medical direction.

The title to any EMS equipment purchased with these funds shall not lie with the department, but shall be determined by the county.

140.4(2) *Ineligible costs.* Costs which are not eligible for funding include, but are not limited to, the following:

a. Certification/recertification fees.

b. Building and construction costs.

c. Debt amortization.

d. Land.

e. Rent.

f. Utilities.

g. Vehicles including, but not limited to, ambulances, fire apparatus, boats, rescue/first response vehicles, snowmobiles and vehicle parts.

[**ARC 0756C**, IAB 5/29/13, effective 7/3/13]

641—140.5(135) Disbursement of funds. Rescinded IAB 2/2/05, effective 3/9/05.

641—140.6(135) Application denial or partial denial—appeal. Rescinded IAB 2/2/05, effective 3/9/05.

These rules are intended to implement Iowa Code section 135.25.

[Filed 2/26/98, Notice 9/10/97—published 3/25/98, effective 4/29/98]
[Filed emergency 5/8/02—published 5/29/02, effective 5/8/02]
[Filed 7/18/02, Notice 5/29/02—published 8/7/02, effective 9/11/02]
[Filed 1/13/05, Notice 11/24/04—published 2/2/05, effective 3/9/05]
[Filed ARC 0756C (Notice ARC 0654C, IAB 3/20/13), IAB 5/29/13, effective 7/3/13]

CHAPTER 141
LOVE OUR KIDS GRANT

641—141.1(321) Definitions. For the purpose of these rules, the following definitions shall apply:

"Applicant" means an individual, organization, or entity that has as its responsibility the development, promotion, and implementation of injury prevention and education initiatives for children and who has submitted an application for a love our kids grant.

"Department" means the Iowa department of public health.

"Director" means the director of the Iowa department of public health.

"Fiscal year" means the 12-month period beginning July 1 and ending June 30.

"Project period" means the period of time which the department intends to support the project.

"Service delivery area" means the defined geographic area for delivery of project services. Applications shall not fragment existing integrated service delivery within the defined geographic area.

"Service program" or *"service"* means any medical care ambulance service or nontransport service that has received authorization by the department.

641—141.2(321) Purpose. The purpose of the love our kids grant is to provide grant funding to statewide, regional and local agencies and service programs that have as their responsibility the development, promotion, and implementation of injury prevention and education initiatives for children in Iowa.

641—141.3(321) Funding limitations. Grants awarded under this program shall be subject to the guidelines within the contract and the following, including but not limited to:

141.3(1) Up to 10 percent of the funds generated by this program may be retained by the department for program management.

141.3(2) Rescinded IAB 12/6/06, effective 11/8/06.

141.3(3) Following the disbursement of the funds pursuant to subrule 141.3(1), depending upon availability of funds, up to 24 contracts, with a goal of funding at least three per EMS region for $1500 each, may be made available to statewide, regional and local agencies or service programs that are located within the federally appointed rural areas (listing of eligible rural counties can be found at http://ruralhealth.hrsa.gov) and have as their responsibility the development, promotion, and implementation of injury prevention and education initiatives for children.

141.3(4) Expenditures occurring prior to the project period are not eligible for reimbursement.

141.3(5) Grant awards shall be subject to the availability of funds.

641—141.4(321) Use of funds. Funds may be used for injury prevention initiatives specified within the guidelines for children aged birth to 21 including but not limited to:

1. Education and materials;
2. Training materials and equipment;
3. Safety equipment;
4. Public information and education campaigns;
5. Conferences/seminars/workshops;
6. Systems development;
7. Contractual services;
8. Personnel costs.

641—141.5(321) Application process. An application for a love our kids grant is required and available from the Iowa Department of Public Health, Bureau of EMS, Lucas State Office Building, Des Moines, Iowa 50319-0075. The application process is as follows:

141.5(1) Applications from qualified applicants shall be submitted to the department prior to July 1 of each year.

141.5(2) The department shall review the application, and may approve, partially approve, request clarification or request a new application.

641—141.6(321) Application denial or partial denial—appeal.

141.6(1) Denial or partial denial of an application shall be effected in accordance with the requirements of Iowa Code section 17A.12. Notice to the applicant of denial or partial denial shall be served by restricted certified mail, return receipt requested, or by personal service.

141.6(2) Any request for appeal concerning denial or partial denial shall be submitted by the aggrieved party in writing to the department by certified mail, return receipt requested, within 30 days of the receipt of the department's notice. The address is Iowa Department of Public Health, Bureau of Emergency Medical Services, Lucas State Office Building, Des Moines, Iowa 50319-0075. Prior to or at the hearing, the department may rescind the denial or partial denial. If no request for appeal is received within the 30-day time period, the department's notice of denial or partial denial shall become the department's final agency action.

141.6(3) Upon receipt of an appeal that meets contested case status, the appeal shall be forwarded within five working days to the department of inspections and appeals pursuant to the rules adopted by that agency regarding the transmission of contested cases. The information upon which the adverse action is based and any additional information which may be provided by the aggrieved party shall also be provided to the department of inspections and appeals.

141.6(4) The hearing shall be conducted according to the procedural rules of the department of inspections and appeals found in 481—Chapter 4, Iowa Administrative Code.

141.6(5) When the hearing officer makes a proposed decision and order, it shall be served by restricted certified mail, return receipt requested, or delivered by personal service. That proposed decision and order then becomes the department's final agency action without further proceedings ten days after it is received by the aggrieved party unless an appeal to the director is taken as provided in subrule 141.6(6).

141.6(6) Any appeal to the director for review of the proposed decision and order of the administrative law judge shall be filed in writing and mailed to the director by certified mail, return receipt requested, or delivered by personal service within ten days after the receipt of the administrative law judge's proposed decision and order by the aggrieved party. A copy of the appeal shall also be mailed to the administrative law judge. Any request for an appeal shall state the reason for appeal.

141.6(7) Upon receipt of an appeal request, the administrative law judge shall prepare the record of the hearing for submission to the director. The record shall include the following:

a. All pleadings, motions, and rules.

b. All evidence received or considered and all other submissions by recording or transcript.

c. A statement of all matters officially noticed.

d. All questions and offers of proof, objections and rulings on them.

e. All proposed findings and exceptions.

f. The proposed decision and order of the administrative law judge.

141.6(8) The decision and order of the director becomes the department's final agency action upon receipt by the aggrieved party and shall be delivered by restricted certified mail, return receipt requested, or by personal service.

141.6(9) It is not necessary to file an application for a rehearing to exhaust administrative remedies when appealing to the director or the district court as provided in Iowa Code section 17A.19. The aggrieved party to the final agency action of the department who has exhausted all administrative remedies may petition for judicial review of that action pursuant to Iowa Code chapter 17A.

141.6(10) Any petition for judicial review of a decision and order shall be filed in the district court within 30 days after the decision and order becomes final. A copy of the notice of appeal shall be sent to the department by certified mail, return receipt requested, or by personal service. The address is Iowa Department of Public Health, Bureau of Emergency Medical Services, Lucas State Office Building, Des Moines, Iowa 50319-0075.

141.6(11) The party who appeals a final agency action to the district court shall pay the cost of the preparation of a transcript of the contested case hearing for the district court.

These rules are intended to implement Iowa Code section 147A.4 and Iowa Code Supplement section 321.34.

[Filed 1/23/98, Notice 10/22/97—published 2/11/98, effective 3/18/98]
[Filed 1/13/05, Notice 11/24/04—published 2/2/05, effective 3/9/05]
[Filed emergency 11/8/06—published 12/6/06, effective 11/8/06]
[Filed 1/10/07, Notice 12/6/06—published 1/31/07, effective 3/7/07]

CHAPTER 142
OUT-OF-HOSPITAL DO-NOT-RESUSCITATE ORDERS

641—142.1(144A) Definitions. For the purpose of these rules, the following definitions shall apply:

"Adult" means an individual 18 years of age or older.

"Attending physician" means a physician selected by, or assigned to, the patient who has primary responsibility for the treatment and care of the patient.

"Comfort care" means care within the scope of the health care provider's training and certification to alleviate pain and suffering, but does not include resuscitative measures.

"Department" means the Iowa department of public health.

"Emergency medical care" means such medical procedures as:

1. Administration of intravenous solutions.
2. Intubation.
3. Performance of cardiac defibrillation and synchronized cardioversion.
4. Administration of emergency drugs as provided by rule by the department.
5. Any other medical procedure approved by the department, by rule, as appropriate to be performed by emergency medical care providers who have been certified in that procedure.

"EMS provider" means an emergency medical care provider as defined in Iowa Code section 147A.1.

"Health care provider" means a person, including an emergency medical care provider, who is licensed, certified, or otherwise authorized or permitted by the law of this state to administer health care in the ordinary course of business or in the practice of a profession.

"Hospital" means any hospital licensed under the provisions of Iowa Code section 135B.1.

"Life-sustaining procedure" means any medical procedure, treatment, or intervention, including resuscitation, which utilizes mechanical or artificial means to sustain, restore or supplant a spontaneous vital function, and when applied to a patient in a terminal condition, would serve only to prolong the dying process. "Life-sustaining procedure" does not include the provision of nutrition or hydration except when required to be provided parenterally or through intubation or the administration of medication or performance of any medical procedure deemed necessary to provide comfort care or to alleviate pain.

"Medical direction" means direction, advice, or orders provided by a medical director, supervising physician, or physician designee (in accordance with written parameters and protocols) to emergency medical care providers.

"Medical director" means any physician licensed under Iowa Code chapter 148, 150, or 150A who shall be responsible for overall medical direction of the service program and who has completed a medical director workshop, sponsored by the department, within one year of assuming duties.

"On-line medical direction" means immediate medical direction provided directly to service program emergency medical care providers, in accordance with written parameters and protocols, by the medical director, supervising physician or physician designee either on scene or by any telecommunications system.

"Out-of-hospital do-not-resuscitate identifier" or *"OOH DNR identifier"* means a durable yet easily removable unique identification approved by the department and worn by a patient who has an out-of-hospital do-not-resuscitate order.

"Out-of-hospital do-not-resuscitate order" or *"OOH DNR order"* means a written order on a form approved by the department, signed by an attending physician, executed in accordance with the requirements of Iowa Code section 144A.7A and issued consistent with Iowa Code section 144A.2, that directs the withholding or withdrawal of resuscitation when an adult patient in a terminal condition is outside the hospital.

"Out-of-hospital do-not-resuscitate protocol" or *"OOH DNR protocol"* means the statewide protocol approved by the department and intended to avoid unwarranted resuscitation by emergency medical care providers when a valid out-of-hospital do-not-resuscitate order or identifier is encountered.

"Patient" means any individual who is sick, injured, or otherwise incapacitated.

"Physician" means any individual licensed under Iowa Code chapter 148, 150, or 150A.

"Physician assistant" or *"PA"* means an individual licensed pursuant to Iowa Code chapter 148C.

"Physician designee" means any registered nurse licensed under Iowa Code chapter 152, or any physician assistant licensed under Iowa Code chapter 148C and approved by the board of physician assistant examiners. The physician designee acts as an intermediary for a supervising physician in accordance with written policies and protocols in directing the actions of emergency medical care providers.

"Qualified patient" means any adult patient as defined in Iowa Code section 144A.2.

"Registered nurse" or *"RN"* means an individual licensed pursuant to Iowa Code chapter 152.

"Resuscitation" means any medical intervention that utilizes mechanical or artificial means to sustain, restore, or supplant a spontaneous vital function, including but not limited to chest compression, defibrillation, intubation, and emergency drugs intended to alter cardiac function or otherwise to sustain life.

"Service program" or *"service"* means any medical care ambulance service or nontransport service that has received authorization by the department.

"Supervising physician" means any physician licensed under Iowa Code chapter 148, 150, or 150A. The supervising physician is responsible for medical direction of emergency medical care providers when such providers are providing emergency medical care.

"Terminal condition" means an incurable or irreversible condition that, without the administration of life-sustaining procedures, will, in the opinion of the attending physician, result in death within a relatively short period of time or a state of permanent unconsciousness from which, to a reasonable degree of medical certainty, there can be no recovery.

641—142.2(144A) Purpose. These rules direct EMS providers and service programs on the processes for the recognition of OOH DNR orders or identifiers and implementation of the OOH DNR protocol. In addition, these rules set forth guidelines for consideration by health care providers and organizations to help ensure uniform and orderly understandings, processes and procedures for the use and implementation of OOH DNR orders consistent with the provisions of Iowa Code chapter 144A.

641—142.3(144A,147A) Responsibilities of the department.

142.3(1) *OOH DNR physician order.* The department designates the OOH DNR order form contained in Appendix A as the uniform OOH DNR order form to be used statewide. If an attending physician issues an OOH DNR order for a qualified patient, the physician shall use the form contained in Appendix A.

142.3(2) *OOH DNR personal identifier.* The department designates the identifier supplied by MedicAlert® as the uniform personal identifier to be used for mobile qualified patients statewide. Instructions for obtaining a uniform personal identifier are contained in Appendix A.

142.3(3) *OOH DNR protocol.* The department designates the OOH DNR protocol contained in Appendix B as the uniform protocol to be used by EMS providers in implementing an OOH DNR order.

142.3(4) *Appendix A and Appendix B forms.* Forms referenced in subrules 142.3(1) through 142.3(3) are available through the Iowa Department of Public Health, Bureau of EMS, Lucas State Office Building, Des Moines, Iowa 50319-0075, or through the bureau of EMS's Web site at www.idph.state.ia.us/ems.

641—142.4(144A,147A) EMS providers.

142.4(1) *Uniform protocol.* EMS providers shall act in accordance with the department's OOH DNR protocol when implementing an OOH DNR order. EMS service programs shall incorporate the OOH DNR protocol as part of their service protocols and, using educational materials consistent with the curriculum developed and approved by the department, shall inform and educate EMS providers on the protocol's requirements as well as the requirements of Iowa Code chapter 144A and these rules.

142.4(2) *Responsibility of the EMS provider.* The EMS provider responding outside a hospital as a member of a service program shall:

a. Evaluate the patient's status and needs through an assessment consistent with the provider's training and certification.

b. Determine the existence of an OOH DNR order or that the patient is wearing an OOH DNR identifier.

c. Honor the OOH DNR order or OOH DNR identifier worn by the patient.

d. Discontinue resuscitation if the OOH DNR order or OOH DNR identifier worn by the patient is discovered after resuscitation has begun.

e. Follow the OOH DNR protocol.

f. Provide comfort care to the patient at all times.

g. Contact on-line medical direction for further instructions as necessary to provide appropriate patient care.

h. If uncertainty exists regarding the validity or applicability of the OOH DNR order or identifier, the EMS provider shall provide the necessary and appropriate resuscitation.

i. Document compliance or noncompliance with the OOH DNR order and the reasons for not complying with the order, including evidence that the order was revoked or uncertainty regarding the validity or applicability of the order.

641—142.5(144A) Guidelines for non-EMS health care providers, patients, and organizations. In order to encourage understanding and implementation of OOH DNR orders and protocols throughout Iowa and honor a qualified patient's wishes and intent regarding the provision of life-sustaining procedures in an out-of-hospital setting consistent with the requirements of Iowa Code chapter 144A, the following guidelines should be considered.

142.5(1) *Attending physicians who issue OOH DNR orders.* The attending physician should ensure that the following are accomplished:

a. Establish that the patient is qualified because the patient:

(1) Is an adult; and

(2) Has a terminal condition.

b. Explain to the patient or the individual legally authorized to act on the patient's behalf the implications of an OOH DNR order.

c. If the qualified patient or individual legally authorized to act on the patient's behalf decides that the patient should not be resuscitated, the attending physician may issue the OOH DNR order on the prescribed uniform order form. The order will direct health care providers to withhold or withdraw resuscitation.

d. Explain to the qualified patient or the individual legally authorized to act on the patient's behalf how the OOH DNR order is revoked.

e. Include a copy of the order in the qualified patient's medical record.

f. Provide a copy of the order to the qualified patient or the individual legally authorized to act on the patient's behalf.

142.5(2) *Qualified patients or legally authorized persons.* A qualified patient or a person legally authorized to act on a qualified patient's behalf should:

a. Make an informed decision concerning resuscitation in the face of a terminal condition.

b. Ensure that the qualified patient's family members are aware of this decision and inform them of the location of the OOH DNR order and the purpose of an OOH DNR identifier.

c. Understand the process for revocation as described in rule 641—142.6(144A).

142.5(3) *Non-EMS health care providers.* A non-EMS health care provider contemplating resuscitation for a patient should:

a. Evaluate the patient's status and needs through an assessment consistent with the provider's training, certification and licensure.

b. Determine that the presenting condition is within the scope of the patient's terminal condition and is not the result of a motor vehicle collision, fire, mass casualty or other cause of a sudden accident or injury.

c. Determine the existence of an OOH DNR order or that the patient is wearing an OOH DNR identifier.

d. Honor the OOH DNR order or OOH DNR identifier worn by the patient.

e. Discontinue resuscitation if the OOH DNR order or OOH DNR identifier worn by the patient is discovered after resuscitation has begun.

f. Provide comfort care to the patient at all times.

g. If uncertainty exists regarding the validity or applicability of the OOH DNR order or identifier, the health care provider shall provide the necessary and appropriate resuscitation.

h. Document compliance or noncompliance with the OOH DNR order and the reasons for not complying with the order, including evidence that the order was revoked or uncertainty regarding the validity or applicability of the order or OOH DNR identifier.

142.5(4) *Hospitals.* A hospital licensed under Iowa Code chapter 135B:

a. Shall not be precluded from honoring an OOH DNR order entered in accordance with this chapter and in compliance with established hospital policies and protocols.

b. Should, to avail itself of the immunities provided within Iowa Code chapter 142, establish such policies and protocols to address an OOH DNR order or identifier encountered on a person who presents to the emergency department or in any other area within the facility if the person presents as a patient or visitor.

c. Should integrate policies and procedures with the OOH DNR protocol for hospital-based ambulance service programs, if present.

142.5(5) *Other health care organizations.* A nursing home, home health care agency, hospice, or other health care organization should establish policies and protocols consistent with these rules to address admitted patients who have OOH DNR orders.

641—142.6(144A) Revocation of the out-of-hospital do-not-resuscitate order. An OOH DNR order is deemed revoked at any time that a patient, or an individual authorized to act on the patient's behalf as designated on the OOH DNR order, is able to communicate in any manner the intent that the order be revoked, without regard to the mental or physical condition of the patient. A revocation is only effective as to the health care provider upon communication to that provider by the patient, an individual authorized to act on the patient's behalf as designated in the OOH DNR order, or by another person to whom the revocation is communicated by the patient.

641—142.7(144A) Personal wishes of family members or other individuals who are not authorized to act on the patient's behalf. The personal wishes of family members or other individuals who are not authorized in the order to act on the patient's behalf shall not supersede a valid OOH DNR order.

641—142.8(144A) Transfer of patients.

142.8(1) An attending physician who is unwilling to comply with an OOH DNR order or who is unwilling to comply with the provisions of Iowa Code section 144A.7A shall take all reasonable steps to effect the transfer of the patient to another physician.

142.8(2) If the policies of a hospital, nursing home, home health care agency, hospice or other health care organization preclude compliance with the OOH DNR order of a qualified patient, the provider shall take all reasonable steps to effect the transfer of the patient to an organization in which the provisions of Iowa Code section 144A.7A can be carried out.

641—142.9(144A) Application to existing orders.

142.9(1) An OOH DNR order or similar order executed prior to September 10, 2003, is valid and shall be honored in accordance with the then-applicable provisions of the law.

142.9(2) Health care providers may honor an OOH DNR order or identifier from another state if it can be validated and applied in a manner consistent with the OOH DNR order or identifier prescribed in these rules. In cases where there is uncertainty, clarification should be sought through on-line medical direction or resuscitation efforts should be initiated.

These rules are intended to implement Iowa Code sections 144A.7A and 147A.4.

[Filed 7/18/03, Notice 5/28/03—published 8/6/03, effective 9/10/03]
[Filed ARC 7550B (Notice ARC 7357B, IAB 11/19/08), IAB 2/11/09, effective 3/18/09]

APPENDIX A

Iowa Department of Public Health
OUT-OF-HOSPITAL DO-NOT-RESUSCITATE ORDER
(Please type or print)

Date of Order: _____/_____/_____
Patient Information:
Name: (Last)_____(First)_____(Middle)_____
Address: _____(City)_____(Zip)_____
Date of Birth: _____/_____/_____ Gender (Circle): M or F
Name of Hospice or Care Facility (if applicable): _____

Attending Physician Order

As the attending physician for the above-named patient, I certify that this individual is over 18 years of age and has a terminal diagnosis. After consultation with this patient (or the patient's legal representative), I hereby direct any and all health care providers, including qualified emergency medical services (EMS) personnel, to withhold or withdraw the following life-sustaining procedures in accordance with Iowa law (Iowa Code chapter 142A):

- Cardiopulmonary Resuscitation/Cardiac Compression (Chest Compressions).
- Endotracheal Intubation/Artificial or Mechanical Ventilation (Advance Airway Management).
- Defibrillation and Related Procedures.
- Use of Resuscitation Drugs.

This directive does NOT apply to other medical interventions for comfort care.

_____ _____/_____/_____
Signature of Attending Physician (MD, DO) **Date**

_____ (_____)_____-_____
Printed Name of Attending Physician **Physician's Telephone (Emergency)**

To the extent that it is possible, a person designated by the patient may revoke this order on the patient's behalf. If the patient wishes to authorize any other person(s) to revoke this order, the patient MUST list those persons' names below:

Name: _____
Name: _____
Name: _____
Name: _____

Patients please note: Directions for obtaining a uniform identifier are listed on the back of this form. The uniform identifier is the key way the health care provider and/or EMS personnel can quickly recognize that you have an Out-of-Hospital Do-Not-Resuscitate order. If you are not wearing an identifier, the health care provider and/or EMS personnel may not realize that you do not want to be resuscitated.

Physicians please note: Information regarding the completion of an Out-of-Hospital Do-Not-Resuscitate order is on the back of this form.

APPENDIX A

Directions for obtaining a uniform identifier:

The uniform identifier may be obtained through MedicAlert®[1], which requires:

1. A completed MedicAlert® application, which is available in physician offices or through MedicAlert® by phoning (800)432-5378 or the Web site www.medicalert.org, and fee.
2. A copy of this completed OOH DNR order, which must accompany the MedicAlert® application or be sent to MedicAlert® prior to the identifier's being mailed.

[1]MedicAlert® is a nonprofit 501C membership organization.

Suggested guidelines for physicians:

1. Please review the Iowa Out-of-Hospital Do-Not-Resuscitate order and related protocol with the patient/patient's legal representative(s). The following points may be helpful:

- Patient/patient's legal representative(s) listed on this order must understand the significance of this order, that in the event the patient's heart or breathing stops or malfunctions, the anticipated result of this order is death.
- Patient/patient's legal representative(s) listed on this order may revoke this directive at any time. However, the desire to revoke must be communicated to the EMS or other health care professionals at the scene.
- It is important to emphasize that this order does not apply to medical interventions to make the patient more comfortable.
- The importance of wearing the uniform identifier for those qualified patients who would benefit from the mobility this offers should be stressed. It is also helpful to walk patients through the process they must follow to acquire the identifier.

2. Provide a copy of this order to the patient/patient's legal representative(s) listed on this order and place the original in the patient's medical records.

The OOH DNR Order form is available through the Iowa Department of Public Health, Bureau of EMS, Lucas State Office Building, Des Moines, Iowa 50319-0075, or through the Bureau of EMS's Web site www.idph.state.ia.us/ems.

[**ARC 7550B**, IAB 2/11/09, effective 3/18/09]

APPENDIX B

EMS OUT-OF-HOSPITAL DO-NOT-RESUSCITATE PROTOCOL

Purpose: This protocol is intended to avoid unwarranted resuscitation by emergency care providers in the out-of-hospital setting for a *qualified patient*.[1] There must be a valid Out-of-Hospital Do-Not-Resuscitate (OOH DNR) order signed by the qualified patient's attending physician or the presence of the OOH DNR identifier indicating the existence of a valid OOH DNR order.

No resuscitation: Means withholding any medical intervention that utilizes mechanical or artificial means to sustain, restore, or supplant a spontaneous vital function, including but not limited to:

1. Chest compressions,
2. Defibrillation,
3. Esophageal/tracheal/double-lumen airway; endotracheal intubation, or
4. Emergency drugs to alter cardiac or respiratory function or otherwise sustain life.

Patient criteria: The following patients are recognized as qualified patients to receive no resuscitation:

1. The presence of the uniform OOH DNR order or uniform OOH DNR identifier, or
2. The presence of the attending physician to provide direct verbal orders for care of the patient.

The presence of a signed physician order on a form other than the uniform OOH DNR order form approved by the department may be honored if approved by the service program EMS medical director. However, the immunities provided by law apply only in the presence of the uniform OOH DNR order or uniform OOH DNR identifier. When the uniform OOH DNR order or uniform OOH DNR identifier is not present, contact must be made with on-line medical control and on-line medical control must concur that no resuscitation is appropriate.

Revocation: An OOH DNR order is deemed revoked at any time that a patient, or an individual authorized to act on the patient's behalf as listed on the OOH DNR order, is able to communicate in any manner the intent that the order be revoked. The personal wishes of family members or other individuals who are not authorized in the order to act on the patient's behalf shall not supersede a valid OOH DNR order.

Comfort Care (♥): When a patient has met the criteria for no resuscitation under the foregoing information, the emergency care provider should continue to provide that care which is intended to make the patient comfortable (a.k.a. ♥ **Comfort Care**). Whether other types of care are indicated will depend upon individual circumstances for which medical control may be contacted by or through the responding ambulance service personnel.

♥ ***Comfort Care*** *may include, but is not limited to:*

1. *Pain medication.*
2. *Fluid therapy.*
3. *Respiratory assistance (oxygen and suctioning).*

[1]*Qualified patient* means an adult patient determined by an attending physician to be in a terminal condition for which the attending physician has issued an Out-of-Hospital DNR order in accordance with the law. (Iowa Administrative Code 641—142.1(144A), definitions)

CHAPTER 143
AUTOMATED EXTERNAL DEFIBRILLATOR PROGRAM

AUTOMATED EXTERNAL DEFIBRILLATOR GRANT PROGRAM

641—143.1(135) Purpose. An automated external defibrillator grant program is established to provide matching funds to eligible organizations that are seeking to implement an early defibrillation program. The objective of the grant program is to enhance and supplement the emergency response system in rural areas of the state by providing increased access to automated external defibrillator equipment by rural emergency and community personnel.

641—143.2(135) Definitions. For the purposes of these rules, the following definitions shall apply:

"Automated external defibrillator" or *"AED"* means an external semiautomatic device that determines whether defibrillation is required.

"Community organization" means an educational institution, nonprofit organization, social service agency, philanthropic organization, or business, trade, or professional association.

"CPR" means cardiopulmonary resuscitation.

"Department" means the Iowa department of public health.

"Early defibrillation program" means a program established by the applicant to enhance and supplement the local EMS system.

"EMS" means emergency medical services.

"Local board of health" means a county, city, or district board of health.

"Rural" means a geographic area outside an urban or suburban setting with a population of less than 15,000 persons.

641—143.3(135) Application process. To be eligible for an automated external defibrillator program grant, a local board of health, community organization or city shall:

143.3(1) Properly complete and submit the department's AED grant program application, which shall require an applicant to:

a. Demonstrate the ability to provide matching funds of 50 percent of the cost of the program;

b. Designate an individual who shall be responsible for the overall supervision of the early defibrillation program; and

c. Include a plan for increasing rural emergency or community personnel access to automated external defibrillator equipment; and

143.3(2) Notify local EMS service programs of the intent to establish an early defibrillation program.

641—143.4(135) Early defibrillation program. A local board of health, community organization or city that receives an automated external defibrillator program grant shall:

143.4(1) Adopt and implement a policy that ensures establishment of an emergency plan of action; AED maintenance; personnel competency in the use of an AED and CPR; and a method for postevent analysis and staff debriefing.

143.4(2) Designate an individual who shall be responsible for the overall supervision of the early defibrillation program.

143.4(3) Submit an annual report to the department indicating the number of AED uses, patient outcomes and number of individuals trained.

143.4(4) Comply with the terms and conditions of the contract with the department for implementation of the program.

641—143.5(135) Review process. The department shall establish a request for proposal and application process for eligible organizations to apply for an automated external defibrillator program grant. The department shall establish a process to review applications, which shall include receiving input from a review committee. The review process and review criteria shall be described in the request for proposals.

641—143.6(135) Appeals. An applicant may appeal the denial of a properly submitted grant application. Appeals shall be governed by 641—176.8(135,17A).

641—143.7 to **143.9** Reserved.

AUTOMATED EXTERNAL DEFIBRILLATOR MAINTENANCE

641—143.10(135) Purpose. These rules establish standards for the maintenance of automated external defibrillators for a person or entity that owns, manages or is otherwise responsible for the premises on which an automated external defibrillator is located if the person or entity maintains the automated external defibrillator in accordance with Iowa Code section 613.17 as amended by 2008 Iowa Acts, Senate File 505.
[**ARC 7551B**, IAB 2/11/09, effective 3/18/09]

641—143.11(135) Definition. For the purposes of these rules, the following definition shall apply:

"Automated external defibrillator" or *"AED"* means an external semiautomatic device that determines whether defibrillation is required.
[**ARC 7551B**, IAB 2/11/09, effective 3/18/09]

641—143.12(135) AED maintenance. The person or entity maintaining the AED shall:

143.12(1) Ensure that the AED is maintained and inspected in accordance with the manufacturer's guidelines.

143.12(2) Maintain records of all maintenance and inspections of the AED for the usable life of the device.

143.12(3) Ensure that the AED is programmed to conform to nationally accepted guidelines for treatment of cardiac arrest patients.
[**ARC 7551B**, IAB 2/11/09, effective 3/18/09]

These rules are intended to implement Iowa Code section 135.26.

641—143.13 to **143.15** Reserved.

FIRE DEPARTMENT RESPONSE WITH AUTOMATED EXTERNAL DEFIBRILLATOR

641—143.16(147A) Purpose. The purpose of these rules is to allow a local fire department that is not authorized as an EMS service program and that has an AED to respond to cardiac arrest events in the department's community. These rules are intended to enhance and supplement the local EMS system with nontraditional early defibrillation programs.
[**ARC 9358B**, IAB 2/9/11, effective 3/16/11]

641—143.17(147A) Definitions. For the purpose of these rules, the following definitions shall apply:

"Automated external defibrillator" or *"AED"* means an external semiautomatic device that determines whether defibrillation is required.

"CPR" means training and successful course completion in cardiopulmonary resuscitation, AED, and obstructed airway procedures for all age groups according to recognized national standards.

"Emergency medical care provider" means an individual who has been trained to provide emergency and nonemergency medical care at the first responder, EMT-basic, EMT-intermediate, EMT-paramedic, paramedic specialist or other certification levels recognized by the department before 1984 and who has been issued a certificate by the department.

"Local fire department" means a paid, volunteer, or combination fire protection service provided by a benefited fire district under Iowa Code chapter 357B or by a county, municipality or township or a private corporate organization that has a valid contract to provide fire protection service for a benefited fire district, county, municipality, township or governmental agency. "Local fire department" does not include a military or private industrial fire department or an authorized Iowa EMS service.

"Service program" or *"service"* means any medical care ambulance service or nontransport service that has received authorization by the department.
[**ARC 9358B**, IAB 2/9/11, effective 3/16/11]

641—143.18(147A) Local fire department AED service registration. A local fire department that desires to allow its firefighters to use an AED may register with the department to provide AED coverage.

143.18(1) *Training requirements.* Local fire department personnel wishing to provide AED coverage shall have current course completion in CPR.

143.18(2) *Local fire department AED service—registration, guidelines, and standards.* A local fire department may register with the department to provide AED coverage. Local fire departments seeking registration with the department shall:

a. Complete the department's AED service registration form initially and every five years thereafter.

b. Provide an AED liaison to be responsible for supervision of the AED service.

c. Ensure that the AED is maintained and inspected in accordance with rule 641—143.12(135).

d. Maintain records of all maintenance and inspections of the AED for the usable life of the device.

e. Ensure that the fire department's AED providers maintain AED and CPR skill competency.

f. Identify which authorized Iowa ambulance service program(s) will provide patient transportation.

g. Ensure that emergency medical care is limited to CPR and AED.

143.18(3) *Complaints and investigations.* Complaints and investigations shall be conducted as with any complaint received against an EMS service program in accordance with rule 641—132.10(147A).
[**ARC 9358B**, IAB 2/9/11, effective 3/16/11]

These rules are intended to implement Iowa Code chapters 135, 147A and 613.

[Filed emergency 11/10/04—published 12/8/04, effective 11/10/04]
[Filed 1/13/05, Notice 12/8/04—published 2/2/05, effective 3/9/05]
[Filed ARC 7551B (Notice ARC 7358B, IAB 11/19/08), IAB 2/11/09, effective 3/18/09]
[Filed ARC 9358B (Notice ARC 9241B, IAB 11/17/10), IAB 2/9/11, effective 3/16/11]

CHAPTER 144
EMERGENCY MEDICAL SERVICES—AIR MEDICAL SERVICE PROGRAM AUTHORIZATION

641—144.1(147A) Definitions. For the purposes of this chapter, the following definitions shall apply:

"Air ambulance" means any privately or publicly owned rotorcraft or fixed-wing aircraft which may be specifically designed, modified, constructed, equipped, staffed and used regularly to transport the sick, injured or otherwise incapacitated who are in need of out-of-hospital emergency medical care or whose condition requires treatment or continuous observation while being transported.

"Air ambulance crew member" means an individual who has been trained to provide emergency and nonemergency medical care at the certification or licensure levels recognized by the department and who has been issued a certificate or license by the department.

"Air ambulance service" means any privately or publicly owned service program which utilizes rotorcraft or fixed-wing aircraft in order to provide patient transportation and emergency medical services.

"Continuous quality improvement" or *"CQI"* means a program that is an ongoing process to monitor standards at all EMS operational levels including the structure, process, and outcomes of the patient care event.

"Critical care paramedic" or *"CCP"* means a currently certified paramedic specialist who has successfully completed a critical care course of instruction approved by the department and has received endorsement from the department as a critical care paramedic.

"Critical care transport" or *"CCT"* means specialty care patient transportation when medically necessary, for a critically ill or injured patient needing CCP skills, between medical care facilities, and provided by an authorized ambulance service that is approved by the department to provide critical care transportation and staffed by one or more critical care paramedics or other health care professional in an appropriate specialty area.

"Deficiency" means noncompliance with Iowa Code chapter 147A or these rules.

"Department" means the Iowa department of public health.

"Director" means the director of the Iowa department of public health.

"Direct supervision" means services provided by an EMS provider in a hospital setting or other health care entity in which health care is ordinarily performed when in the personal presence of a physician or under the direction of a physician who is immediately available or under the direction of a physician assistant or registered nurse who is immediately available and is acting consistent with adopted policies and protocols of a hospital or other health care entity.

"Emergency medical care" means such medical procedures as:

1. Administration of intravenous solutions.
2. Intubation.
3. Performance of cardiac defibrillation and synchronized cardioversion.
4. Administration of emergency drugs as provided by protocol.
5. Any medical procedure authorized by 641—subrule 131.3(3).

"Emergency medical care provider" means an individual who has been trained to provide emergency and nonemergency medical care at the first responder, EMT-basic, EMT-intermediate, EMT-paramedic, paramedic specialist or other certification levels recognized by the department before 1984 and who has been issued a certificate by the department.

"Emergency medical services" or *"EMS"* means an integrated medical care delivery system to provide emergency and nonemergency medical care at the scene or during out-of-hospital patient transportation in an ambulance.

"Emergency medical technician-basic" or *"EMT-B"* means an individual who has successfully completed the current United States Department of Transportation's Emergency Medical Technician-Basic curriculum and department enhancements, has passed the department's approved written and practical examinations, and is currently certified by the department as an EMT-B.

"Emergency medical technician-paramedic" or *"EMT-P"* means an individual who has successfully completed the current United States Department of Transportation's (DOT) EMT-intermediate curriculum or the 1985 or earlier DOT EMT-P curriculum, has passed the department's approved written and practical examinations, and is currently certified by the department as an EMT-P.

"Emergency medical transportation" means the transportation by ambulance of sick, injured or otherwise incapacitated persons who require emergency medical care.

"EMS advisory council" means a council appointed by the director to advise the director and develop policy recommendations concerning regulation, administration, and coordination of emergency medical services in the state.

"EMS system" means any specific arrangement of emergency medical personnel, equipment, and supplies designed to function in a coordinated fashion.

"Endorsement" means providing approval in an area related to emergency medical care including, but not limited to, CCP and emergency medical services.

"FAA" means Federal Aviation Administration.

"FAR" means Federal Aviation Regulation.

"Fixed-wing ambulance" means any privately or publicly owned fixed-wing aircraft specifically designed, modified, constructed, equipped, staffed and used regularly to transport the sick, injured or otherwise incapacitated who are in need of out-of-hospital emergency medical care or whose condition requires treatment or continuous observation while being transported.

"Hospital" means any hospital licensed under the provisions of Iowa Code chapter 135B.

"Inclusion criteria" means criteria determined by the department and adopted by reference to determine which patients are to be included in the Iowa EMS service program registry or the trauma registry.

"Iowa EMS Patient Registry Data Dictionary" means reportable data elements for all ambulance service responses and definitions determined by the department and adopted by reference.

"Medical direction" means direction, advice, or orders provided by a medical director, supervising physician, or physician designee (in accordance with written parameters and protocols) to emergency medical care personnel.

"Medical director" means any physician licensed under Iowa Code chapter 148, who shall be responsible for overall medical direction of the service program and who has completed a medical director workshop, sponsored by the department, within one year of assuming duties.

"Nonemergency transportation" means transportation that may be provided for those persons determined to need transportation only.

"NTSB" means National Transportation Safety Board.

"Off-line medical direction" means the monitoring of EMS providers through retrospective field assessments and treatment documentation review, critiques of selected cases with the EMS personnel, and statistical review of the system.

"On-line medical direction" means immediate medical direction provided directly to service program EMS providers, in accordance with written parameters and protocols, by the medical director, supervising physician or physician designee either on-scene or by any telecommunications system.

"Paramedic" or *"EMT-P"* means an emergency medical technician-paramedic.

"Paramedic specalist" or *"PS"* means an individual who has successfully completed the current United States Department of Transportation's EMT-Paramedic curriculum or equivalent, has passed the department's approved written and practical examinations, and is currently certified by the department as a paramedic specialist.

"Patient" means any individual who is sick, injured, or otherwise incapacitated.

"Patient care report" or *"PCR"* means a computerized or written report that documents the assessment and management of the patient by the emergency care provider in the out-of-hospital setting.

"Physician" means any individual licensed under Iowa Code chapter 148.

"Physician assistant" or *"PA"* means an individual licensed pursuant to Iowa Code chapter 148C.

"Physician designee" means any registered nurse licensed under Iowa Code chapter 152, or any physician assistant licensed under Iowa Code chapter 148C and approved by the board of physician

assistants. The physician designee acts as an intermediary for a supervising physician in accordance with written policies and protocols in directing the care provided by emergency medical care providers.

"Preceptor" means an individual who has been assigned by the training program, clinical facility or service program to supervise students while the students are completing their clinical or field experience. A preceptor must be an emergency medical care provider certified at the level being supervised or higher, or must be licensed as a registered nurse, physician assistant or physician.

"Protocols" means written directions and orders, consistent with the department's standard of care, that are to be followed by an emergency medical care provider in emergency and nonemergency situations. Protocols must be approved by the service program's medical director and must address the care of both adult and pediatric patients.

"Registered nurse" or *"RN"* means an individual licensed pursuant to Iowa Code chapter 152.

"Reportable patient data" means data elements and definitions determined by the department and adopted by reference to be reported to the Iowa EMS service program registry or the trauma registry or a trauma care facility on patients meeting the inclusion criteria.

"Rotorcraft ambulance" means any privately or publicly owned rotorcraft specifically designed, modified, constructed, equipped, staffed and used regularly to transport the sick, injured or otherwise incapacitated who are in need of out-of-hospital emergency medical care or whose condition requires treatment or continuous observation while being transported.

"Service director" means an individual who is responsible for the operation and administration of a service program.

"Service program" or *"service"* means any medical care air ambulance service that has received authorization by the department.

"Service program area" means the geographic area of responsibility served by any given ambulance or nontransport service program.

"Student" means any individual enrolled in a training program and participating in the didactic, clinical, or field experience portions.

"Supervising physician" means any physician licensed under Iowa Code chapter 148. The supervising physician is responsible for medical direction of emergency medical care personnel when such personnel are providing emergency medical care.

"Training program" means an NCA-approved Iowa college, the Iowa law enforcement academy or an Iowa hospital approved by the department to conduct emergency medical care training.

"Transport agreement" means a written agreement between two or more service programs that specifies the duties and responsibilities of the agreeing parties to ensure appropriate transportation of patients in a given service area.

[**ARC 8662B**, IAB 4/7/10, effective 5/12/10]

641—144.2(147A) Authority of emergency medical care provider.

144.2(1) An emergency medical care provider who holds an active certification issued by the department may:

a. Render via on-line medical direction emergency and nonemergency medical care in those areas for which the emergency medical care provider is certified, as part of an authorized service program:

(1) At the scene of an emergency;

(2) During transportation to a hospital;

(3) While in the hospital emergency department;

(4) Until patient care is directly assumed by a physician or by authorized hospital personnel; and

(5) During transfer from one entity where health care is normally provided to another.

b. Function in any hospital or any other entity in which health care is ordinarily provided only when under the direct supervision of a physician when:

(1) Enrolled as a student in and approved by a training program;

(2) Fulfilling continuing education requirements;

(3) Employed by or assigned to a hospital or other entity in which health care is ordinarily provided only when under the direct supervision of a physician as a member of an authorized service

program, or in an individual capacity, by rendering lifesaving services in the facility in which employed or assigned pursuant to the emergency medical care provider's certification and under direct supervision of a physician, physician assistant, or registered nurse. An emergency medical care provider shall not routinely function without the direct supervision of a physician, physician assistant, or registered nurse. However, when the physician, physician assistant, or registered nurse cannot directly assume emergency care of the patient, the emergency medical care personnel may perform, without direct supervision, emergency medical care procedures for which certified, if the life of the patient is in immediate danger and such care is required to preserve the patient's life;

(4) Employed by or assigned to a hospital or other entity in which health care is ordinarily provided only when under the direct supervision of a physician, as a member of an authorized service program, or in an individual capacity, to perform nonlifesaving procedures for which certified and designated in a written job description. Such procedures may be performed after the patient is observed by and when the emergency medical care provider is under the supervision of the physician, physician assistant, or registered nurse, including when the registered nurse is not acting in the capacity of a physician designee, and where the procedure may be immediately abandoned without risk to the patient.

144.2(2) When emergency medical care personnel are functioning in a capacity identified in paragraph 144.2(1)*"a,"* they may perform emergency and nonemergency medical care without contacting a supervising physician or physician designee if written protocols have been approved by the service program medical director which clearly identify when the protocols may be used in lieu of voice contact.

144.2(3) An emergency medical care provider who has knowledge of an emergency medical care provider, service program or training program that has violated Iowa Code chapter 147A or these rules shall report such information to the department within 30 days.

[**ARC 8662B**, IAB 4/7/10, effective 5/12/10]

641—144.3(147A) Air ambulance service program—authorization and renewal procedures, inspections and transfer or assignment of certificates of authorization.

144.3(1) *General requirements for air ambulance authorization and renewal of authorization.*

a. An air ambulance service in this state that desires to provide emergency medical care in an out-of-hospital setting shall apply to the department for authorization to establish a program utilizing certified emergency medical care providers for delivery of care at the scene of an emergency or a nonemergency, during transportation to a hospital, during transfer from one medical care facility to another, or while in the hospital emergency department and until care is directly assumed by a physician or by authorized hospital personnel. Application for authorization shall be made on forms provided by the department. Applicants shall complete and submit the forms to the department at least 30 days prior to the anticipated date of authorization.

b. To renew service program authorization, the service program shall continue to meet the requirements of Iowa Code chapter 147A and these rules. The renewal application shall be completed and submitted to the department at least 30 days before the current authorization expires.

c. Applications for authorization and renewal of authorization may be obtained upon request to: Iowa Department of Public Health, Bureau of Emergency Medical Services, Lucas State Office Building, Des Moines, Iowa 50319-0075, or the bureau of EMS Web site (www.idph.state.ia.us/ems).

d. The department shall approve an application when the department is satisfied that the program proposed by the application will be operated in compliance with Iowa Code chapter 147A and these rules.

e. Service program authorization is valid for a period of three years from its effective date unless otherwise specified on the certificate of authorization or unless sooner suspended or revoked.

f. Service programs shall be fully operational upon the effective date and at the level specified on the certificate of authorization and shall meet all applicable requirements of Iowa Code chapter 147A and these rules. Deficiencies that are identified shall be corrected within a time frame determined by the department.

g. Any service program owner in possession of a certificate of authorization as a result of transfer or assignment shall continue to meet all applicable requirements of Iowa Code chapter 147A and these rules. In addition, the new owner shall apply to the department for a new certificate of authorization within 30 days following the effective date of the transfer or assignment.

h. Service programs that acquire and maintain current status with a nationally recognized EMS service program accreditation entity that meets or exceeds Iowa requirements may be exempted from the service application/inspection process. A copy of the state service application and accreditation inspection must be filed with the department for approval.

144.3(2) *Out-of-state air ambulance service programs.*

a. Service programs located in other states which wish to provide emergency medical care in Iowa must meet all requirements of Iowa Code chapter 147A and these rules and must be authorized by the department except when:

(1) Transporting patients from locations within Iowa to destinations outside of Iowa;

(2) Transporting patients from locations outside of Iowa to destinations within Iowa;

(3) Transporting patients to and from locations outside of Iowa when doing so requires travel through Iowa;

(4) Responding to a request for mutual aid in this state; or

(5) Making less than 30 EMS responses per year to locations within Iowa and then transporting the patients to destinations within Iowa.

b. An out-of-state service program that meets any of the exception criteria established in this subrule shall be authorized to provide emergency medical care by the state in which the program resides and shall provide the department with verification of current state authorization upon request.

144.3(3) *Air ambulance service program inspections.*

a. The department shall inspect each service program at least once every three years. The department without prior notification may make additional inspections at times, places and under such circumstances as it deems necessary to ensure compliance with Iowa Code chapter 147A and these rules.

b. The department may request additional information from or may inspect the records of any service program which is currently authorized or which is seeking authorization to ensure continued compliance or to verify the validity of any information presented on the application for service program authorization.

c. The department may inspect the patient care records of a service program to verify compliance with Iowa Code chapter 147A and these rules.

d. No person shall interfere with the inspection activities of the department or its agents pursuant to Iowa Code section 135.36.

e. Interference with or failure to allow an inspection by the department or its agents may be cause for disciplinary action in reference to service program authorization.

144.3(4) *Temporary service program authorization.*

a. A temporary service program authorization may be issued to services that wish to operate during special events that may need emergency medical care coverage at a level other than basic care. Temporary authorization is valid for a period of 30 days unless otherwise specified on the certificate of authorization or unless sooner suspended or revoked. Temporary authorization shall apply to those requirements and standards for which the department is responsible. Applicants shall complete and submit the necessary forms to the department at least 30 days prior to the anticipated date of need.

b. The service shall meet applicable requirements of these rules but may apply for a variance using the criteria outlined in rule 641—144.7(147A).

c. The service shall submit a justification which demonstrates the need for the temporary service program authorization.

d. The service shall submit a report to the department within 30 days after the expiration of the temporary authorization which includes as a minimum:

(1) Number of patients treated;

(2) Types of treatment rendered;

(3) Any operational or medical problems.

[**ARC 8662B**, IAB 4/7/10, effective 5/12/10]

641—144.4(147A) Service program levels of care and staffing standards.

144.4(1) An air ambulance service program seeking authorization shall:

a. Apply for authorization at the following levels:

(1) EMT-Basic.

(2) Paramedic specialist.

(3) Critical care transport.

b. Conduct all air ambulance service flights under a minimum of FAR rules, Part 135.

c. Maintain an adequate number of aircraft and personnel to provide 24-hour-per-day, 7-day-per-week coverage. The number of aircraft and personnel to be maintained shall be determined by the service and shall be based upon, but not limited to, the following:

(1) Number of calls;

(2) Service area and population; and

(3) Availability of other services in the area.

d. Staff fixed-wing ambulances, at a minimum on each flight request, with the following staff while a patient is being transported:

(1) One health care provider who is certified or licensed in the state from which the aircraft launches and is certified as an EMT-Basic or higher level; and

(2) One FAA-certified commercial pilot who is appropriately rated in the aircraft being used for the transport.

e. Staff rotorcraft ambulances, at a minimum on each flight request, with the following staff while a patient is being transported:

(1) Two health care providers who are certified or licensed in the state from which the aircraft launches, one of whom must at a minimum be certified as a paramedic specialist; and

(2) One FAA-certified commercial pilot who is appropriately rated in the aircraft being used for the transport.

f. Train medical crew members in the following areas:

(1) Patient care limitations in flight.

(2) Altitude physiology.

(3) Appropriate utilization of air medical services.

(4) Communication system.

(5) Aircraft operations and safety.

(6) Emergency safety and survival.

(7) Prehospital scene response and safety.

(8) Crew resource management.

(9) Program flight risk assessment procedures.

g. Apply to the department to receive approval to provide critical care transportation based upon appropriately trained staff and approved equipment.

h. Ensure that the health care provider with the highest level of certification (on the transporting service) attends the patient, unless otherwise established by protocol approved by the medical director.

144.4(2) Air ambulance service program operational requirements. Air ambulance service programs shall:

a. Complete and maintain a patient care report concerning the care provided to each patient. Services shall provide, at a minimum, a verbal report upon delivery of a patient to a receiving facility and shall provide a complete PCR within 24 hours to the receiving facility.

b. Ensure that personnel duties are consistent with the level of certification and the service program's level of authorization.

c. Maintain current personnel rosters and personnel files. The files shall include the names and addresses of all personnel and documentation that verifies EMS provider credentials including, but not limited to:

(1) Current provider level certification.

(2) Current course completions/certifications/endorsements as may be required by the medical director.

d. If requested by the department, notify the department in writing of any changes in personnel rosters.

e. Have a medical director and 24-hour-per-day, 7-day-per-week on-line medical direction available.

f. Ensure that the appropriate service program personnel respond as required in this rule and that personnel respond in a reasonable amount of time.

g. Notify the department in writing within seven days of any change in service director or ownership or control or of any reduction or discontinuance of operations.

h. Select a new or temporary medical director if for any reason the current medical director cannot or no longer wishes to serve in that capacity. Selection shall be made before the current medical director relinquishes the duties and responsibilities of that position.

i. Within seven days of any change of medical director, notify the department in writing of the selection of the new or temporary medical director who must have indicated in writing a willingness to serve in that capacity.

j. Implement a continuous quality improvement program for patient transport missions to include as a minimum:

(1) Medical audits.

(2) Skills competency.

(3) Flight safety procedures.

(4) Appropriateness of air medical response.

(5) Review of flight risk assessment.

(6) Loop closure requiring physician review of patient transport missions.

k. Document an equipment maintenance program to ensure proper working condition and appropriate quantities.

144.4(3) Air ambulance equipment and vehicle standards.

a. All air ambulance service programs shall carry equipment and supplies in quantities as determined by the medical director and appropriate to the service program's level of care and available medical crew member personnel, and as established in the service program's approved protocols.

b. Pharmaceutical drugs may be carried and administered by appropriate staff upon completion of training and pursuant to the service program's established protocols approved by the medical director.

c. All pharmaceuticals shall be maintained in accordance with the rules of the state board of pharmacy.

d. Accountability for drug exchange, distribution, storage, ownership, and security shall be subject to applicable state and federal requirements. The method of accountability shall be described in the written pharmacy agreement. A copy of the written pharmacy agreement shall be submitted to the department.

e. Each aircraft shall be equipped and maintained in accordance with FAA operating requirements.

f. Each aircraft shall be equipped with a survival kit.

144.4(4) Communications and flight dispatch program.

a. Each service program shall maintain a telecommunications system between the medical crew member and the source of the service program's medical direction and other appropriate entities.

b. All telecommunications shall be conducted in an appropriate manner and on a frequency approved by the Federal Communications Commission and the department.

c. A flight-following policy shall be adopted. This policy shall at a minimum contain the following:

(1) Minimum time between communications with aircraft and its monitoring center;

(2) Documentation of communications with flight;

(3) Lost communications procedures; and

(4) Overdue aircraft procedures.

d. Flight programs shall provide staff or contract with a flight dispatch system for receiving flight requests. Communication specialists shall be trained in the following:

(1) Flight operations;

(2) Aviation weather;

(3) Aviation maintenance;

(4) Flight following;

(5) Flight risk assessment;

(6) Flight service minimum safety standards; and

(7) Overdue aircraft procedures.

144.4(5) Flight risk assessment policy.

a. Each service shall have a flight risk assessment policy in accordance with current FAA guidelines.

b. Flight risk assessment policies shall mandate adherence to policy for all flights.

c. Flight risk assessment policies shall address other flight services being requested, en route, or having been denied request to same incident.

144.4(6) Air ambulance service program—incident and accident response and reports.

a. Air medical services shall have a policy in place outlining missing/overdue/accident issues. This policy will contain at a minimum the following:

(1) Overdue aircraft procedures; and

(2) Postincident action plans.

b. Incidents of fire or other destructive or damaging occurrences or theft of a service program aircraft, vehicle, equipment, or drugs shall be reported to the department within 48 hours following the occurrence of the incident.

c. A report relating to an accident resulting in personal injury, death or property damage shall be submitted to the department within seven days following an accident involving a service program aircraft or vehicle. A complete FAA/NTSB accident report shall be submitted to the bureau of EMS upon completion of the report.

144.4(7) Reportable patient data—adoption by reference.

a. The department shall prepare compilations for release or dissemination on all reportable patient data entered into the EMS service program registry during the reporting period. The compilations shall include, but not be limited to, trends and patient care outcomes for local, regional, and statewide evaluations. The compilations shall be made available to all service programs submitting reportable patient data to the registry.

b. Access and release of reportable patient data and information.

(1) The data collected by and furnished to the department pursuant to this subrule are confidential records of the condition, diagnosis, care, or treatment of patients or former patients, including outpatients, pursuant to Iowa Code section 22.7. The compilations prepared for release or dissemination from the data collected are not confidential under Iowa Code subsection 22.7(2). However, information which individually identifies patients shall not be disclosed, and state and federal law regarding patient confidentiality shall apply.

(2) The department may approve requests for reportable patient data for special studies and analysis provided that the request has been reviewed and approved by the deputy director of the department with respect to the scientific merit and confidentiality safeguards and the department has given administrative approval for the proposal. The confidentiality of patients and the EMS service program shall be protected.

(3) The department may require entities requesting the data to pay any or all of the reasonable costs associated with furnishing the reportable patient data.

c. To the extent possible, activities under this subrule shall be coordinated with other health data collection methods.

d. Quality assurance.

(1) For the purpose of ensuring the completeness and quality of reportable patient data, the department or an authorized representative may examine all or part of the patient care report as necessary to verify or clarify all reportable patient data submitted by a service program.

(2) Review of a patient care report by the department shall be scheduled in advance with the service program and completed in a timely manner.

e. "Iowa Trauma Patient Data Dictionary" is available through the Iowa Department of Public Health, Bureau of Emergency Medical Services, Lucas State Office Building, Des Moines, Iowa 50319-0075, or the bureau of EMS Web site (www.idph.state.ia.us/ems).

f. "Iowa EMS Patient Registry Data Dictionary" identified in 641—paragraph 136.2(1)*"c"* is incorporated by reference for inclusion criteria and reportable patient data to be reported to the department. For any differences which may occur between the adopted reference and this chapter, the administrative rules shall prevail.

g. "Iowa EMS Patient Registry Data Dictionary" identified in 641—paragraph 136.2(1)*"c"* is available through the Iowa Department of Public Health, Bureau of Emergency Medical Services, Lucas State Office Building, Des Moines, Iowa 50319-0075, or the bureau of EMS Web site (www.idph.state.ia.us/ems).

144.4(8) An air ambulance service program shall:

a. Submit reportable patient data identified in subrule 144.4(7) via electronic transfer. Data shall be submitted in a format approved by the department.

b. Submit reportable patient data identified in subrule 144.4(7) to the department for each calendar quarter. Reportable patient data shall be submitted no later than 90 days after the end of the quarter.

144.4(9) The patient care report is a confidential document and shall be exempt from disclosure pursuant to Iowa Code subsection 22.7(2) and shall not be accessible to the general public. Information contained in these reports, however, may be utilized by any of the indicated distribution recipients and may appear in any document or public health record in a manner which prevents the identification of any patient or person named in these reports.

144.4(10) Implementation. The director may grant exceptions and variances from the requirements of this chapter for any air medical service. Exceptions or variations shall be reasonably related to undue hardships which existing services experience in complying with this chapter. Services requesting exceptions and variances shall be subject to other applicable rules adopted pursuant to Iowa Code chapter 147A. Nothing in this chapter shall be construed to require any service to provide a level of care beyond minimum basic care standards.

[**ARC 8662B**, IAB 4/7/10, effective 5/12/10]

641—144.5(147A) Air ambulance service program—off-line medical direction.

144.5(1) The medical director shall be responsible for providing appropriate medical direction and overall supervision of the medical aspects of the service program and shall ensure that those duties and responsibilities are not relinquished before a new or temporary replacement is functioning in that capacity.

144.5(2) The medical director's duties include, but need not be limited to:

a. Developing, approving and updating protocols to be used by service program personnel that meet or exceed the minimum standard protocols developed by the department.

b. Developing and maintaining liaisons between the service, other physicians, physician designees, hospitals, and the medical community served by the service program.

c. Monitoring and evaluating the activities of the service program and individual personnel performance, including establishment of measurable outcomes that reflect the goals and standards of the EMS system.

d. Assessing the continuing education needs of the service and individual service program personnel and assisting them in the planning of appropriate continuing education programs.

e. Being available for individual evaluation and consultation to service program personnel.

f. Performing or appointing a designee to complete the medical audits required in subrule 144.5(4).

g. Developing and approving an applicable continuous quality improvement policy to be used for all patient care encounters, including an action plan and follow-up.

h. Informing the medical community of the emergency medical care being provided according to approved protocols in the service program area.

i. Helping to resolve service operational problems.

j. Approving or removing an individual from service program participation.

144.5(3) Supervising physicians, physician designees, or other appointees as defined in the continuous quality improvement policy referenced in paragraph 144.5(2)*"g"* may assist the medical director by:

a. Providing medical direction.

b. Reviewing the emergency medical care provided.

c. Reviewing and updating protocols.

d. Providing and assessing continuing education needs for service program personnel.

e. Helping to resolve operational problems.

144.5(4) The medical director or other qualified designees shall randomly audit (at least quarterly) documentation of calls where emergency medical care was provided. The medical director shall randomly review audits performed by the qualified appointee. The audit shall be in writing and shall include, but need not be limited to:

a. Reviewing the patient care provided by service program personnel and remedying any deficiencies or potential deficiencies that may be identified regarding medical knowledge or skill performance.

b. Response time and time spent at the scene.

c. Overall EMS system response to ensure that the patient's needs were matched to available resources including, but not limited to, mutual aid and tiered response.

d. Completeness of documentation.

144.5(5) On-line medical direction when provided through a hospital.

a. The medical director shall designate in writing at least one hospital which has established a written on-line medical direction agreement with the department. It shall be the medical director's responsibility to notify the department in writing of changes regarding this designation.

b. Hospitals signing an on-line medical direction agreement shall:

(1) Ensure that the supervising physicians or physician designees will be available to provide on-line medical direction via telecommunications on a 24-hour-per-day basis.

(2) Identify the service programs for which on-line medical direction will be provided.

(3) Establish written protocols for use by supervising physicians and physician designees who provide on-line medical direction.

(4) Administer a quality assurance program to review orders given. The program shall include a mechanism for the hospital and service program medical directors to discuss and resolve any identified problems.

c. A hospital which has a written medical direction agreement with the department may provide medical direction for any or all service program authorization levels and may also agree to provide backup on-line medical direction for any other service program when that service program is unable to contact its primary source of on-line medical direction.

d. Only supervising physicians or physician designees shall provide on-line medical direction. However, a physician assistant, registered nurse or EMT (of equal or higher level) may relay orders to emergency medical care personnel, without modification, from a supervising physician. A physician designee may not deviate from approved protocols.

e. The hospital shall provide, upon request to the department, a list of supervising physicians and physician designees providing on-line medical direction.

f. The department may verify a hospital's communications system to ensure compliance with the on-line medical direction agreement.

g. A supervising physician or physician designee who gives orders (directly or via communications equipment from some other point) to an emergency medical care provider is not subject to criminal liability by reason of having issued the orders and is not liable for civil damages for acts or omissions relating to the issuance of the orders unless the acts or omissions constitute recklessness.

h. Nothing in these rules requires or obligates a hospital, supervising physician or physician designee to approve requests for orders received from emergency medical care personnel.

NOTE: Hospitals in other states may participate provided that the applicable requirements of this subrule are met.

[**ARC 8662B**, IAB 4/7/10, effective 5/12/10]

641—144.6(147A) Complaints and investigations—denial, citation and warning, probation, suspension or revocation of service program authorization or renewal.

144.6(1) All complaints regarding the operation of authorized air medical service programs, or those purporting to be or operating as the same, shall be reported to the department. The address is: Iowa Department of Public Health, Bureau of Emergency Medical Services, Lucas State Office Building, Des Moines, Iowa 50319-0075.

144.6(2) Complaints and the investigative process will be treated as confidential in accordance with Iowa Code section 22.7 and chapter 272C.

144.6(3) Air ambulance service program authorization may be denied or a program may be disciplined as provided in subrule 144.6(4) by the department in accordance with Iowa Code subsections 147A.5(3) and 272C.3(2) for any of the following reasons:

a. Knowingly allowing the falsifying of a patient care report (PCR).

b. Failure to submit required reports and documents.

c. Delegating professional responsibility to a person when the service program knows that the person is not qualified by training, education, experience or certification to perform the required duties.

d. Practicing, condoning, or facilitating discrimination against a patient, student or employee based on race, ethnicity, national origin, color, sex, sexual orientation, age, marital status, political belief, religion, mental or physical disability diagnosis, or social or economic status.

e. Knowingly allowing sexual harassment of a patient, student or employee. Sexual harassment includes sexual advances, sexual solicitations, requests for sexual favors, and other verbal or physical conduct of a sexual nature.

f. Failure or repeated failure of the applicant or alleged violator to meet the requirements or standards established pursuant to Iowa Code chapter 147A or the rules adopted pursuant to that chapter.

g. Obtaining or attempting to obtain or renew or retain service program authorization by fraudulent means or misrepresentation or by submitting false information.

h. Engaging in conduct detrimental to the well-being or safety of the patients receiving or who may be receiving emergency medical care.

i. Failure to correct a deficiency within the time frame required by the department.

144.6(4) Method of discipline. The department has the authority to impose the following disciplinary sanctions against an authorized service program:

a. Issue a citation and warning.

b. Impose a civil penalty not to exceed $1,000.

c. Require additional education or training.

d. Impose a period of probation under specified conditions.

e. Prohibit permanently, until further order of the department, or for a specific period a service program's ability to engage in specific procedures, methods, acts, or activities incident to the practice of the profession.

f. Suspend an authorization until further order of the department or for a specific period.

g. Revoke an authorization.

h. Impose such other sanctions as allowed by law and as may be appropriate.

144.6(5) The department shall notify the applicant of the granting or denial of authorization or renewal, or shall notify the alleged violator of action to issue a citation and warning, place on probation, suspend or revoke authorization or renewal pursuant to Iowa Code sections 17A.12 and 17A.18. Notice of issuance of a denial, citation and warning, probation, suspension or revocation shall be served by restricted certified mail, return receipt requested, or by personal service.

144.6(6) Any requests for appeal concerning the denial, citation and warning, probation, suspension or revocation of service program authorization or renewal shall be submitted by the aggrieved party in writing to the department by certified mail, return receipt requested, within 20 days of the receipt of the department's notice. The address is: Iowa Department of Public Health, Bureau of Emergency Medical Services, Lucas State Office Building, Des Moines, Iowa 50319-0075. If such a request is made within the 20-day time period, the notice shall be deemed to be suspended. Prior to or at the hearing, the department may rescind the notice upon satisfaction that the reason for the denial, citation and warning, probation, suspension or revocation has been or will be removed. After the hearing, or upon default of the applicant or alleged violator, the administrative law judge shall affirm, modify or set aside the denial, citation and warning, probation, suspension or revocation. If no request for appeal is received within the 20-day time period, the department's notice of denial, probation, citation and warning, suspension or revocation shall become the department's final agency action.

144.6(7) Upon receipt of an appeal that meets contested case status, the appeal shall be forwarded within five working days to the department of inspections and appeals pursuant to the rules adopted by that agency regarding the transmission of contested cases. The information upon which the adverse action is based and any additional information which may be provided by the aggrieved party shall also be provided to the department of inspections and appeals.

144.6(8) The hearing shall be conducted according to the procedural rules of the department of inspections and appeals found in 481—Chapter 10.

144.6(9) When the administrative law judge makes a proposed decision and order, it shall be served by restricted certified mail, return receipt requested, or delivered by personal service. That proposed decision and order then becomes the department's final agency action without further proceedings ten days after it is received by the aggrieved party unless an appeal to the director is taken as provided in subrule 144.6(10).

144.6(10) Any appeal to the director for review of the proposed decision and order of the administrative law judge shall be filed in writing and mailed to the director by certified mail, return receipt requested, or delivered by personal service within ten days after the receipt of the administrative law judge's proposed decision and order by the aggrieved party. A copy of the appeal shall also be mailed to the administrative law judge. Any request for an appeal shall state the reason for appeal.

144.6(11) Upon receipt of an appeal request, the administrative law judge shall prepare the record of the hearing for submission to the director. The record shall include the following:

a. All pleadings, motions, and rules.

b. All evidence received or considered and all other submissions by recording or transcript.

c. A statement of all matters officially noticed.

d. All questions and offers of proof, objections, and rulings thereon.

e. All proposed findings and exceptions.

f. The proposed decision and order of the administrative law judge.

144.6(12) The decision and order of the director becomes the department's final agency action upon receipt by the aggrieved party and shall be delivered by restricted certified mail, return receipt requested, or by personal service.

144.6(13) It is not necessary to file an application for a rehearing to exhaust administrative remedies when appealing to the director or the district court as provided in Iowa Code section 17A.19. The aggrieved party to the final agency action of the department who has exhausted all administrative remedies may petition for judicial review of that action pursuant to Iowa Code chapter 17A.

144.6(14) Any petition for judicial review of a decision and order shall be filed in the district court within 30 days after the decision and order becomes final. A copy of the notice of appeal shall be sent to the department by certified mail, return receipt requested, or by personal service. The address is: Bureau of Emergency Medical Services, Iowa Department of Public Health, Lucas State Office Building, Des Moines, Iowa 50319-0075.

144.6(15) The party who appeals a final agency action to the district court shall pay the cost of the preparation of a transcript of the contested case hearing for the district court.

144.6(16) Final decisions of the department relating to disciplinary proceedings may be transmitted to the appropriate professional associations, the news media or an employer.

144.6(17) This rule is not subject to waiver or variance pursuant to 641—Chapter 178 or any other provision of law.

144.6(18) Emergency adjudicative proceedings.

a. Necessary emergency action. To the extent necessary to prevent or avoid immediate danger to the public health, safety, or welfare, and consistent with the Constitution and other provisions of law, the department may issue a written order in compliance with Iowa Code section 17A.18 to suspend authorization in whole or in part, order the cessation of any continuing activity, order affirmative action, or take other action within the jurisdiction of the department by emergency adjudicative order.

b. Before issuing an emergency adjudicative order, the department shall consider factors including, but not limited to, the following:

(1) Whether there has been a sufficient factual investigation to ensure that the department is proceeding on the basis of reliable information;

(2) Whether the specific circumstances which pose immediate danger to the public health, safety, or welfare have been identified and determined to be continuing;

(3) Whether the program required to comply with the emergency adjudicative order may continue to engage in other activities without posing immediate danger to the public health, safety, or welfare;

(4) Whether imposition of monitoring requirements or other interim safeguards would be sufficient to protect the public health, safety, or welfare; and

(5) Whether the specific action contemplated by the department is necessary to avoid the immediate danger.

c. Issuance of order.

(1) An emergency adjudicative order shall contain findings of fact, conclusions of law, and policy reasons to justify the determination of an immediate danger in the department's decision to take immediate action. The order is a public record.

(2) The written emergency adjudicative order shall be immediately delivered to the service program that is required to comply with the order by utilizing one or more of the following procedures:

1. Personal delivery.

2. Certified mail, return receipt requested, to the last address on file with the department.

3. Facsimile. Fax may be used as the sole method of delivery if the service program required to comply with the order has filed a written request that agency orders be sent by fax and has provided a fax number for that purpose.

(3) To the degree practicable, the department shall select the procedure for providing written notice that best ensures prompt, reliable delivery.

(4) Unless the written emergency adjudicative order is provided by personal delivery on the same day that the order issues, the department shall make reasonable immediate efforts to contact by telephone the service program that is required to comply with the order.

(5) After the issuance of an emergency adjudicative order, the department shall proceed as quickly as feasible to complete any proceedings that would be required if the matter did not involve an immediate danger.

(6) Issuance of a written emergency adjudicative order shall include notification of the date on which department proceedings are scheduled for completion. After issuance of an emergency adjudicative order, continuance of further department proceedings to a later date will be granted only in compelling circumstances upon application in writing unless the service program that is required to comply with the order is the party requesting the continuance.

[**ARC 8662B**, IAB 4/7/10, effective 5/12/10]

641—144.7(147A) Temporary variances.

144.7(1) If during a period of authorization there is some occurrence that temporarily causes a service program to be in noncompliance with these rules, the department may grant a temporary variance. Temporary variances from these rules (not to exceed six months in length per any approved

request) may be granted by the department to a currently authorized service program. Requests for temporary variances shall apply only to the service program requesting the variance and shall apply only to those requirements and standards for which the department is responsible.

144.7(2) To request a variance, the service program shall:

a. Notify the department verbally (as soon as possible) of the need to request a temporary variance. Submit to the department, within ten days after having given verbal notification to the department, a written explanation for the temporary variance request. The address and telephone number are Iowa Department of Public Health, Bureau of Emergency Medical Services, Lucas State Office Building, Des Moines, Iowa 50319-0075; (515)725-0326.

b. Cite the rule from which the variance is requested.

c. State why compliance with the rule cannot be maintained.

d. Explain the alternative arrangements that have been or will be made regarding the variance request.

e. Estimate the period of time for which the variance will be needed.

144.7(3) Upon notification of a request for variance, the department shall consider, but shall not be limited to the following:

a. Examining the rule from which the temporary variance is requested to determine if the request is appropriate and reasonable.

b. Evaluating the alternative arrangements that have been or will be made regarding the variance request.

c. Examining the effect of the requested variance upon the level of care provided to the general populace served.

d. Requesting additional information if necessary.

144.7(4) Preliminary approval or denial shall be provided verbally within 24 hours. Final approval or denial shall be issued in writing within ten days after department receipt of the written explanation for the temporary variance request and shall include the reason for approval or denial. If approval is granted, the effective date and the duration of the temporary variance shall be clearly stated.

144.7(5) Any request for appeal concerning the denial of a request for temporary variance shall be in accordance with the procedures outlined in rule 641—144.6(147A).

[**ARC 8662B**, IAB 4/7/10, effective 5/12/10]

641—144.8(147A) Transport options for air medical services.

144.8(1) Upon responding to an emergency call, air medical services may make a determination at the scene as to whether air medical transportation is needed. The determination shall be made by a medical crew member and shall be based upon protocol and concurrence of medical control approved by the service program's medical director. When the medical crew member applies this protocol to determine the appropriate transport option, the following criteria, as a minimum, shall be used:

a. Primary assessment;

b. Focused history and physical examination;

c. Chief complaint;

d. Name, address and age of the individual in need of emergency assistance; and

e. Nature of the call for assistance.

144.8(2) Air medical transportation shall be provided whenever any of the above criteria indicate that treatment should be initiated. If treatment is not indicated, the air medical service program shall make arrangements for alternate transportation, if indicated.

[**ARC 8662B**, IAB 4/7/10, effective 5/12/10]

These rules are intended to implement Iowa Code chapter 147A.

[Filed ARC 8662B (Notice ARC 8499B, IAB 1/27/10), IAB 4/7/10, effective 5/12/10]

CHAPTERS 145 to 149
Reserved

CHAPTER 150
IOWA REGIONALIZED SYSTEM OF PERINATAL HEALTH CARE

641—150.1(135,77GA,ch1221) Purpose and scope. Hospitals within the state shall determine whether to participate in Iowa's regionalized system of perinatal health care and shall select the hospital's level of participation in the regionalized system. A hospital having determined to participate in the regionalized system shall comply with the rules appropriate to the level of participation selected by the hospital.

Iowa's regionalized system of perinatal health care helps practitioners in rural Iowa to rapidly access specialty services for their patients even though such services may not exist in the local community. This is predicated on several factors, including the willingness of certain hospitals in moderate-to-large Iowa cities to provide specialty services and the presence of a functional system of patient transportation. These rules address how participating Iowa hospitals relate to the regionalized system and suggest a level of functioning which should identify the role each participating hospital plays in the system.

The following rules present a description of the levels of care among Iowa perinatal hospitals. The levels are as follows: Level I hospital, Level II hospital, Level II regional center, Level II regional neonatology center, and Level III center. The department is very much aware of the need for organization of limited resources in a rural state. Accordingly, the rules are designed to encourage and support the presence of a Level II regional center in areas not populous enough to support a Level III center.

These rules are not meant to hold Iowa hospitals and Iowa perinatal professionals to an impractical ideal. Although the rules are clearly not intended to serve as standards, they do specify particulars when feasible. For example, specification of a designated level of care for a hospital should be clearly evident from the descriptions. Levels of care are designated by the functional capacity of the hospital. Thus, it may be possible to have a number of Level II hospitals or Level III centers in one city.

The primary purpose of designation is to ensure Iowa perinatal patients appropriate care as close to their homes as possible. In an ideal situation, no community hospital would be more than 50 miles from a perinatal center. Unfortunately, Iowa's low population density precludes this. Accordingly, Iowa developed a network of regional centers.

The further intent of these rules is to ensure that when a hospital markets itself at a particular level of perinatal care, it is capable of providing that care. The public is entitled to know the level of functioning. The rules provide the framework to be used in defining and evaluating the level of perinatal services being offered.

641—150.2(135,77GA,ch1221) Definitions. For the purpose of these rules, the following definitions shall apply:

"Categorization" means a preliminary determination by the department that a hospital is capable of providing perinatal care at Level I, Level II, Level II regional, Level II regional neonatology center, or Level III care capabilities.

"Certificate of verification" means a document awarded by the department that identifies a hospital's level of perinatal care and term of verification at that level.

"Department" means the Iowa department of public health.

"Director" means the director of the Iowa department of public health.

"Hospital" means a facility licensed under Iowa Code chapter 135B or a comparable facility located and licensed in another state.

"On-site verification survey" means an on-site survey conducted by the department's statewide perinatal care program based at the University of Iowa hospitals and clinics to assess a hospital's ability to meet the level of designation selected by the hospital.

"Perinatal advisory committee" means the committee that provides review and counsel to the statewide perinatal care program based at the University of Iowa hospitals and clinics.

"Perinatal guidelines advisory committee" means the committee that provides consultation to the department regarding these rules for the regionalized system of perinatal health care.

"Regionalized system of perinatal health care" means the department's program for the provision of appropriate perinatal care as close to patients' homes as possible.

"Respiratory distress" means tachypnea (respiratory rate of 60 or more per minute), grunting, tugging, retracting, nasal flaring, or cyanosis. Any or all of these may constitute respiratory distress.

"Statewide perinatal health care program" means the educational team based at the University of Iowa hospitals and clinics and retained by the department of public health.

"Verification" means a process by which the department certifies a hospital's capacity to provide perinatal care in accordance with criteria established for Level I hospitals, Level II hospitals, Level II regional centers, Level II regional neonatology centers, and Level III centers under these rules.

641—150.3(135,77GA,ch1221) Perinatal guidelines advisory committee.

150.3(1) *Purpose.* The director shall appoint an advisory committee to consult with the department in its development and maintenance of the regionalized system of perinatal health care. This advisory committee should not be confused with the perinatal advisory committee that provides review and counsel to the statewide perinatal care program.

150.3(2) *Appointment.*

a. Members of the advisory committee shall include a representative from each of the following organizations that chooses to designate a nominee to the director: Iowa Hospitals and Health Systems; Iowa Medical Society; Iowa Osteopathic Medical Association; Iowa Chapter, American Academy of Pediatrics; Iowa Section, American College of Obstetricians and Gynecologists; Iowa Academy of Family Physicians; Iowa Nurses Association; Iowa Association of Neonatal Nurses; Iowa Association of Women's Health, Obstetrical and Neonatal Nurses; and Iowa Chapter, Great Plains Organization for Perinatal Health Care.

b. Nonvoting ex officio members of the committee shall include representatives from the department of inspections and appeals, the statewide perinatal health care program at the University of Iowa hospitals and clinics and the division of family and community health medical director at the department.

c. Vacancies shall be filled in the same manner in which the original appointments were made.

d. Three consecutive unexcused absences shall be grounds for the director to consider dismissal of the committee member and appointment of another. The chairperson of the committee shall notify the director of the department.

150.3(3) *Officers.* Officers of the committee shall be a chairperson and a vice-chairperson and shall be elected at the first meeting of each fiscal year unless designated at the time of appointment. Vacancies in the office of chairperson shall be filled by elevation of the vice-chairperson. Vacancies in the office of vice-chairperson shall be filled by election at the next meeting after the vacancy occurs. The chairperson shall preside at all meetings of the committee, appoint such subcommittees as deemed necessary, and designate the chairperson of each subcommittee. If the chairperson is absent or unable to act, the vice-chairperson shall perform the duties of the chairperson. When so acting, the vice-chairperson shall have all the powers of and be subject to all restrictions upon the chairperson. The vice-chairperson shall also perform such other duties as may be assigned by the chairperson.

150.3(4) *Meetings.*

a. The committee shall establish a meeting schedule on an annual basis to conduct its business. Meetings may be scheduled as business requires, but notice to members must be at least five working days prior to the meeting date. A four-week notice is encouraged to accommodate the schedules of members.

b. Robert's Rules of Order shall govern all meetings.

c. Action on any issue before the committee can be taken only by a majority vote of the entire membership. The committee shall maintain information sufficient to indicate the vote of each member present.

150.3(5) *Subcommittees.* The committee may designate one or more subcommittees to perform such duties as may be deemed necessary.

150.3(6) *Expenses of committee members.* The following may be considered necessary expenses for reimbursement of committee members when incurred on behalf of committee business and are subject to established state reimbursement rates:

a. Reimbursement for travel in a private car.
b. Actual lodging and meal expenses including sales tax on lodging and meals.
c. Actual expense of public transportation.

641—150.4(135,77GA,ch1221) Categorization and selection of level of care designation. Hospitals that have previously participated in the regionalized system of perinatal health care shall be categorized by the department at the level of care designation last verified by the department. A hospital that has chosen to participate in the regionalized system for the first time or that has chosen to select a new level of care designation shall:

1. Submit the following information to the department:
- Description of the geographic area to be served.
- Identification of the target population to be served.
- Identification of Level I hospitals to be served.
- Identification of unmet needs of the area to be served.
- Demonstration of the ability to meet these rules.

2. Mail the information to:

Iowa Regionalized System of Perinatal Health Care
Iowa Department of Public Health
Division of Health Promotion and Chronic Disease Prevention
321 East 12th Street, Lucas State Office Building
Des Moines, Iowa 50319-0075

641—150.5(135,77GA,ch1221) Recommendation by the statewide perinatal care program.

150.5(1) Upon receipt of the hospital's application information from the department, the statewide perinatal care program will provide verification of the hospital's ability to meet the criteria for the level of designation selected by the hospital. The results of the verification shall be submitted to the department, along with a recommendation to grant or deny the hospital a certificate of verification.

150.5(2) The statewide perinatal health care program shall also perform periodic on-site verification surveys of established perinatal service programs to verify the continued ability of each hospital visited to meet the criteria for the level of designation selected by the hospital. The results of each survey shall also be submitted to the department, along with a recommendation to continue, suspend, or revoke the hospital's certificate of verification.

150.5(3) Any review and evaluation of the University of Iowa hospitals and clinics' established perinatal service program shall be performed by the department, or for the department, by a person or entity unaffiliated with the University of Iowa hospitals and clinics.

641—150.6(135,77GA,ch1221) Level I hospitals.

150.6(1) *Definition.* Level I hospitals provide basic inpatient care for pregnant women and newborns without complications; manage perinatal emergencies, including neonatal resuscitation; provide leadership in early risk identification before and after birth; seek consultation or referral for high-risk patients; and provide public and professional education.

150.6(2) *Functions.* Level I hospitals have a family-centered philosophy. Parents have reasonable access to their newborns 24 hours a day within all functional units and are encouraged to participate in the care of their newborns. Generally, parents can be with their newborns in the mother's room. Noninfectious siblings may visit in the mother's room or in a designated space.

Level I hospitals have the capability to:

a. Provide surveillance and care of all patients admitted to the obstetric service with an established triage system for identifying high-risk patients who should be transferred to a facility that provides Level II or higher care, prior to delivery;

b. Provide proper detection and supportive care of unanticipated maternal-fetal problems that occur during labor and delivery;

c. Perform emergency Cesarean sections as soon as possible after the decision to do the operation has been made;

d. Provide transfusions of blood and fresh frozen plasma on a 24-hour basis;

e. Provide anesthesia, pharmacy, radiology, respiratory support, electronic fetal heart-rate monitoring, and laboratory services on a 24-hour basis;

f. Provide care of postpartum conditions;

g. Evaluate the condition of healthy neonates and their continuing care until discharge;

h. Resuscitate all neonates using the neonatal resuscitation program guidelines as published by the American Heart Association/American Academy of Pediatrics;

i. Stabilize all neonates including unexpectedly small or sick neonates before transfer;

j. Consult and arrange transfers in conjunction with the obstetrician, pediatrician or neonatologist at the referral center;

k. Maintain a nursery for normal-term or near-term newborns.

150.6(3) *Physical facilities.* Physical facilities for perinatal care in hospitals should be conducive to care that meets the normal physiologic and psychosocial needs of mothers, neonates, fathers, and families. Special facilities should be available when deviations from the norm require uninterrupted physiologic, biochemical, and clinical observations of patients throughout the perinatal period. Labor, delivery, and newborn care facilities should be located contiguously.

The following recommendations are intended as general guidelines and are meant to be flexible enough to meet local needs. It is recognized that individual limitations of physical facilities for perinatal care may impede strict adherence to the recommendations. Furthermore, not all hospitals will have all the functional units described. Provisions for individual units should be consistent within the framework of a regionalized perinatal care system and the state and local public health regulations.

a. *Obstetric functional units.*

(1) Labor. Areas used for women in labor are equipped with the following components:

1. Adequate space for support persons, personnel, and equipment;
2. Adequate ventilation and temperature control;
3. A labor or birthing bed;
4. A storage area for the patient's clothing and personal belongings;
5. Adjustable lighting that is pleasant for the patient and adequate for examinations;
6. An emergency signal and an intercommunication system;
7. A sphygmomanometer and stethoscope;
8. Mechanical infusion equipment;
9. Fetal monitoring equipment;
10. Oxygen and suction outlets;
11. Access to at least one shower for use by labor patients; and
12. Storage facilities for supplies and equipment.

(2) Delivery.

1. Delivery rooms should be close to the labor rooms in order to afford easy access and to provide privacy to women in labor. A waiting area for families should be adjacent to the delivery suite, and restrooms should be located nearby.

2. Traditional delivery rooms and Cesarean birth rooms are similar in design to operating rooms. Vaginal deliveries can be performed in either room, whereas Cesarean birth rooms are designed especially for that purpose and are thus larger. Each type of birthing room is well lighted and environmentally controlled to prevent chilling of the mother and neonate.

3. It is desirable that Cesarean deliveries be performed in the obstetric unit; however, if this is not possible due to cost and space, equipment for neonatal stabilization and resuscitation, as described herein under 150.6(3)*"b"*(1), is available during delivery.

4. Each delivery room is maintained as a separate unit with the following equipment and supplies necessary for normal delivery and for the management of complications:

- Delivery/operating table that allows variation in position for delivery;
- Instrument table and solution basin stand;

- Instruments and equipment for vaginal delivery, repair of laceration, Cesarean delivery, and the management of obstetric emergencies;
- Solutions and equipment for the intravenous administration of fluids;
- Equipment for administration of all types of anesthesia, including equipment for emergency resuscitation of the mother;
- Individual oxygen, air, and suction outlets for mother and neonate;
- An emergency call system;
- Mirrors for patients to observe the birth;
- Wall clock with a second hand;
- Equipment for fetal heart rate monitoring; and
- Scrub sinks with controls strategically placed to allow observation of the patient.

5. 5. Trays containing drugs and equipment necessary for emergency treatment of both mother and neonate are kept in the delivery room area. Equipment necessary for the treatment of cardiac arrest is easily accessible.

(3) Postpartum care. The postpartum unit is flexible enough to permit comfortable accommodation of patients when the patient census is at its peak and use of beds for alternate functions when the patient census is low. Ideally, single-occupancy rooms should be provided; however, not more than two patients should share one room. If possible, each room in the postpartum unit should have its own toilet and hand-washing facilities. When this is not possible and it is necessary for patients to use common facilities, patients should be able to reach them without entering a general corridor. When the newborn rooms-in with the mother, the room should have hand-washing facilities, a mobile bassinet unit, and supplies necessary for the care of the newborn.

(4) Combined units (labor/delivery/recovery or labor/delivery/recovery/postpartum room).

1. Comprehensive obstetric and neonatal care can be provided to the low-risk and the high-risk parturient and infant and the family in a single room. A homelike, family-centered environment with the capability for providing high-risk care is a key design criterion for both the labor/delivery/recovery (LDR) and labor/delivery/recovery/postpartum (LDRP) rooms. Each room is equipped for all types of delivery except Cesarean deliveries or those that may require general anesthesia.

2. During the labor, delivery, and recovery phases, care can be provided in an LDR room or can be extended to include the postpartum period in an LDRP room.

3. Nurses providing care in combined units are knowledgeable in antepartum care, labor and delivery, postpartum care, and neonatal care, making the use of staff cost-effective and increasing the continuity and quality of care.

b. Neonatal functional units.

(1) Resuscitation/stabilization.

1. A resuscitation and stabilization bed should be available in the immediate area of delivery for those neonates who require it. Contingent upon their condition, neonates are moved from this area to the nursery for admission and stabilization and possible transfer to a Level II regional center or Level III center.

2. The resuscitation area contains the following items:

- Overhead source of radiant heat that can be regulated based on the infant's temperature; radiant warmers with accommodations for X-ray capabilities are recommended;
- Thin resuscitation/examination mattress that allows access on three sides;
- Wall clock;
- Equipment and medications as recommended by the neonatal resuscitation program. This includes a laryngoscope with infant-sized blades, endotracheal tubes, and resuscitation (breathing) bags with masks for full-term and preterm neonates;
- Oxygen, compressed air and suction sources that are separate from those for the mother;
- Equipment for examination, immediate care, and identification of the neonate.

3. The resuscitation area is usually within the delivery room, although it may be in a designated, contiguous, separate room. If resuscitation takes place in the delivery room, the area is large enough to ensure that the resuscitation of the neonate can be achieved without interference with or from the ongoing

care of the mother. Following stabilization of the neonate, the newborn's vital signs must be maintained (e.g., by using prewarmed blankets). The room temperature is kept at a level higher than that customary for patient rooms or operating suites. Qualified nursing staff is available to assess the newborn during this period.

(2) Admission/observation (transitional care stabilization).

1. The admission/observation area is for careful assessment of the neonate's condition during the first 24 hours after birth (i.e., during the period of physiologic adjustment to extrauterine life). This assessment may take place within one or more functional areas (e.g., the room in which the mother is recovering, the LDRP room, the newborn nursery, or a separate admission/observation area). In some hospitals, the newborn nursery is the primary area for transitional care, both for neonates born within the hospital and for those born outside the hospital.

2. The admission/observation area should be near the delivery/Cesarean birth room. If it is part of the maternal recovery area, which is preferable, physical separation of the mother and newborn during this period can be avoided.

3. The capacity of the admission/observation area depends on the size of the delivery service and the duration of close observation. The admission/observation area is well lighted, has a wall clock, and contains emergency resuscitation equipment similar to that in the designated resuscitation area.

4. The physicians' and registered nurses' assessments of the neonate's condition determine the subsequent level of care. Most neonates are transferred from the admission/observation area to the newborn nursery or to the postpartum area for rooming-in. Some neonates may require transfer to another facility. Consultation with a pediatrician or neonatologist and possible referral to a hospital offering a higher level of care should be initiated for infants with respiratory distress or those infants requiring oxygen therapy for more than two hours.

(3) Newborn nursery. Routine care of apparently normal full-term neonates who have demonstrated successful adaptation to extrauterine life may be provided either in the newborn nursery or in the area where the mother is receiving postpartum care. The nursery should be relatively close to the postpartum area. The newborn nursery is well lighted, has a large wall clock, and is equipped for emergency resuscitation.

150.6(4) *Medical personnel.*

a. The obstetric/newborn care area is under the supervision of a board-eligible or board-certified obstetrician-gynecologist, pediatrician or a physician with special interest and experience in obstetrics or pediatrics.

b. Adequate anesthesia coverage by a qualified anesthesia provider is available in a timely fashion for emergency situations on a 24-hour-a-day, 7-day-a-week basis.

c. For Cesarean sections or if neonatal problems are anticipated during vaginal delivery, a second physician or attendant who is skilled in resuscitation and care of the neonate should be in attendance.

150.6(5) *Nursing personnel.* Nurses assigned to the obstetrical/neonatal service demonstrate competency in the care of the mother and infant.

a. *Staffing.* Registered nurses assigned to the obstetrical/neonatal service must be licensed to practice in Iowa, complete an obstetrical or neonatal orientation and demonstrate obstetrical or neonatal competencies as defined by each hospital. At least one of these registered nurses must be available at all times. The primary responsibility of the registered nurse is the delivery of nursing care and departmental organization.

b. *Labor/delivery/immediate postpartum/newborn.*

(1) A registered nurse is responsible for the admission assessment of the gravida in labor, as well as continuing assessment and support of the mother and fetus during labor, delivery and the early postpartum period.

(2) A registered nurse is responsible for the admission assessment of the newborn, as well as continuing assessment during the stabilization period.

(3) Licensed practical nurses, nursing assistants and other appropriate technical personnel may assist in the care of the gravida in labor, but should be under the direct supervision of the registered nurse.

c. *Later postpartum period/newborn care.*

(1) Nursing care of the mother and newborn is directed and supervised by a registered nurse. A licensed practical nurse may provide care for patients without complications.

(2) Nurses have a supporting and teaching role in assisting mothers to care for their infants. This should be recognized and fostered.

150.6(6) *Outreach education.* Level I hospitals should assume an active role in the development and coordination of wellness and preventive programs concerning maternal/child health at the community level (e.g., programs on family planning, family-life education, parenting, breast feeding, cessation of smoking).

150.6(7) *Allied health personnel and services.* Level I hospitals have available, but are not limited to, the following allied health personnel and services:

a. Registered dietitian with knowledge of maternal and neonatal nutrition management;

b. Social worker;

c. Bioengineer-safety and environmental control;

d. Pharmacy;

e. Radiology;

f. Laboratory;

g. Pathology.

150.6(8) *Infection control.*

a. Each hospital establishes written policies and procedures for assessing the health of personnel assigned to the perinatal care services and those who have significant contact with the newborn. This includes restricting their contact with patients when necessary. These policies and procedures include screening for tuberculosis and rubella. Routine culturing of specimens obtained from personnel is not useful, although selective culturing may be of value when a pattern of infection is suspected.

b. No special or separate isolation facilities are required for neonates born at home or in transit to the hospital. Detailed descriptions of the isolation categories and requirements should be available in each hospital's infection control manual.

150.6(9) *Newborn safety.* The protection of infants is the responsibility of all personnel in a facility. Infants are to be transported in a bassinet or stroller and should never be carried. Infants are transported one at a time and are never grouped in a hallway without direct supervision. Infants should always be within the sight and supervision of staff, the mother, or other family members or friends designated by the mother. Each hospital has a policy established that addresses strategies to promote infant safety.

150.6(10) *Maternal-fetal transport.* Maternal-fetal transport is an essential component of modern perinatal care. All facilities in the state providing obstetrics need to be familiar with their own resources and capabilities in dealing with obstetrical and neonatal complications. In most instances, maternal-fetal transport is preferable to neonatal transport. Each hospital, when transporting or accepting a transport, needs a system in place to facilitate a smooth transition of care in the most expeditious manner possible. The majority of maternal-fetal transports can be carried out by ground transportation. It is important for ambulance services to be equipped for maternal-fetal transport and have appropriately trained staff.

641—150.7(135,77GA,ch1221) Level II hospitals.

150.7(1) *Definition.* Level II hospitals provide the same care and services as Level I hospitals plus they provide management of certain high-risk pregnancies and services for newborns with selected complications. These hospitals deliver approximately 500 or more babies annually and have an obstetrician and pediatrician on staff. The perinatal unit is under the co-direction of a pediatrician and an obstetrician.

150.7(2) *Functions.* In addition to the functions of Level I hospitals, Level II hospitals have the capability to:

a. Manage selected high-risk pregnancies.

b. At a minimum, manage neonates of 34 weeks and greater gestation.

c. Manage recovering neonates who can be appropriately transferred from the referral center.

d. Maintain a special area designated for the care of sick neonates.

e. Maintain nursing personnel with demonstrated competency in the care of sick neonates.

f. Maintain nursing personnel with demonstrated competency in the care of high-risk mothers.

Consultation with a pediatrician or neonatologist and possible referral to a higher-level perinatal center should be initiated for infants requiring oxygen therapy for more than six hours or ventilatory care for more than two hours.

150.7(3) *Physical facilities.* Level II hospitals have the same physical facilities as Level I hospitals.

150.7(4) *Medical personnel.* Level II hospitals have the same medical personnel as Level I hospitals. In addition, the perinatal units in Level II hospitals are under the co-direction/supervision of either a board-eligible or board-certified obstetrician/gynecologist or a board-eligible or board-certified pediatrician for their respective areas. Allied medical specialists in various disciplines are on staff, including specialists in internal medicine, radiology, and pathology. Psychiatric services are available.

150.7(5) *Nursing personnel.* Level II hospitals have the same minimal requirements for nursing personnel as Level I hospitals. Nursing orientation and competencies in a Level II hospital are specific to the patient population they serve.

150.7(6) *Outreach education.* Level II hospitals have the same responsibility for outreach education as Level I hospitals.

150.7(7) *Allied health personnel and services.* Level II hospitals have the same allied health personnel and services available as Level I hospitals, with the addition of the following:

a. Respiratory therapy.

b. Ultrasound.

150.7(8) *Infection control.* Infection control guidelines are the same as for Level I hospitals.

150.7(9) *Newborn safety.* Level II hospitals have at least the same requirements for newborn safety as Level I hospitals.

150.7(10) *Maternal-fetal transport.* Level II hospitals have the same requirements for maternal-fetal transport as Level I hospitals. In addition, Level II hospitals are expected to accept patient referrals when appropriate. A critical function of providers at Level II hospitals is to communicate with the providers at Level I hospitals in deciding whether a particular patient should be transported to the Level II hospital. Careful assessment of the hospital's capabilities for perinatal management will be critical in these decisions. This information will need to be disseminated among the hospital staff. Providers of obstetric care need to know the critical gestational age limitations for their particular nursery. Below this gestational age, maternal-fetal transport should be utilized if delivery is anticipated and the circumstances permit.

150.7(11) *Perinatal care committee.*

a. All Level II hospitals maintain a perinatal care committee. Members of this committee should represent, but not be limited to, the fields of obstetrics, pediatrics, family practice, nursing, administration, laboratory, respiratory therapy, anesthesia and social services.

b. Responsibilities of the perinatal care committee include the following:

(1) Develop policies for the unit including provisions to ensure adequate patient care by qualified providers.

(2) Conduct a meeting at least semiannually to resolve problems related to the unit.

(3) Review educational activities conducted by the unit.

(4) Serve as a general liaison between the various groups represented on the committee.

641—150.8(135,77GA,ch1221) Level II regional centers.

150.8(1) *Definition.*

a. Level II regional centers have a developed neonatal intensive care unit (NICU). The sizes of the units vary because of the differing demands in the various regions in Iowa. Accordingly, a Level II regional center may have as few as four neonatal intensive care beds.

b. The obstetric service in a Level II regional center provides services for maternity patients at higher risk than those in Level II hospitals because of the presence of an NICU. However, reasonable efforts should be expended to transfer those patients whose newborns are likely to require a higher intensity of care not available in the Level II regional center but offered in a Level III center.

c. Level II regional centers provide the same care and services as Level II hospitals. In addition, Level II regional centers have the following differentiating characteristics:

(1) A defined referral area;

(2) A defined relationship with a Level III center either in Iowa or a contiguous state;

(3) A minimum of three pediatricians and three obstetricians on staff; and

(4) The ability to manage patients at higher risk than Level I or Level II hospitals. Complexity of care is determined by the training and experience of physicians and nursing staff and extent of support services available.

150.8(2) *Functions.* Level II regional centers have the same functions as Level II hospitals. In addition, Level II regional centers have the capability to:

a. Accept selected maternal transports based on criteria developed in conjunction with the Level III center;

b. Maintain nursing personnel demonstrating competency in the care of high-risk mothers;

c. Maintain a defined neonatal intensive care unit;

d. Maintain nursing personnel that demonstrate competency in the care of infants in neonatal intensive care;

e. Provide care for infants requiring ventilatory support;

f. Maintain a functioning neonatal transport team for the regional area served; and

g. Provide for follow-up care of high-risk newborns in accordance with the Iowa high-risk infant follow-up program.

150.8(3) *Physical facilities.* Level II regional centers have the same physical facilities as Level II hospitals with the addition of the following.

a. *Obstetric functional units.*

(1) Labor/delivery. Patients who have significant medical or obstetric complications are cared for in a room especially equipped with cardiopulmonary resuscitation equipment and other monitoring equipment necessary for observation and special care. It is preferable that this room be located in the labor and delivery area and meet the physical requirements of any other intensive care room in the hospital. When patients with significant medical or obstetric complications are cared for in the labor and delivery area, the unit has the same capabilities as an intensive care unit.

(2) Postpartum. Larger services may have a specific recovery room for postpartum patients with a separate area for high-risk patients. Required equipment is similar to that needed in any surgical recovery room and includes equipment for monitoring vital signs, suctioning, administering oxygen, and infusing fluids intravenously. Cardiopulmonary resuscitation equipment must be immediately available.

b. *Neonatal functional units.*

(1) Continuous cardiopulmonary monitoring and constant nursing care and other support for severely ill infants are provided in the intensive care area. Because emergency care is provided in this area, laboratory and radiological services are readily available 24 hours a day. The results of blood gas analysis are available soon after blood sample collection.

(2) The neonatal intensive care area should be near the delivery/Cesarean birth room and should be easily accessible from the hospital's ambulance entrance. It should be away from routine hospital traffic.

(3) The amount and complexity of equipment are considerably greater than required in Level I and Level II nurseries. Equipment and supplies in the intensive care area include the same items as needed in the resuscitation and intermediate care areas. Immediate availability of emergency oxygen is essential. Continuous monitoring of delivered oxygen concentrations, patient oxygenation, body temperature, ECG, respirations and blood pressure should be available. Supplies should be kept close to the patient station so that nurses are not away from the neonate unnecessarily and may use their time and skills efficiently.

150.8(4) *Medical personnel.*

a. Level II regional centers have the same medical personnel as Level II hospitals with the addition of a board-eligible or board-certified pediatrician serving as director of the NICU. This physician maintains a consultative relationship with Level III physicians. Additionally, Level II regional centers have a minimum of three pediatricians and three obstetricians on staff.

b. If an infant is placed on mechanical ventilation, a physician, nurse practitioner, physician assistant, or appropriate person capable of airway management and experienced in diagnosis is available in-house on a 24-hour basis.

150.8(5) *Nursing personnel.* Level II regional centers have the same minimal requirements for nursing personnel as Level II hospitals. Additionally, Level II regional center registered nurses have demonstrated competency in high-risk obstetrics or neonatal care.

150.8(6) *Outreach education.* Outreach education is provided to each hospital in the referral area at least once per year. This can be achieved by one or more of the following:

a. Sponsoring an annual conference;

b. Visiting Level I and Level II hospitals;

c. Providing educational programs at the regional center for the staff members of the Level I and Level II hospitals;

d. Sending written educational materials to the Level I and II hospitals.

150.8(7) *Allied health personnel and services.* Level II regional centers have the same allied health personnel and services available as Level II hospitals, with the addition of the following:

a. A respiratory therapist, certified lab technician/blood gas technician and an X-ray technologist should be in-house on a 24-hour basis when a neonate is being managed on mechanical ventilation.

b. Allied personnel should have special training and an interest in high-risk mothers and infants.

150.8(8) *Infection control.* Infection control guidelines are the same as for Level II hospitals.

150.8(9) *Newborn safety.* Level II regional centers have at least the same requirements for newborn safety as Level II hospitals.

150.8(10) *Maternal-fetal transport.* Level II regional centers have the same requirements for maternal-fetal transport as Level II hospitals. In addition, Level II regional centers are expected to provide transportation services.

150.8(11) *Perinatal care committee.* Level II regional centers have at least the same requirements for a perinatal care committee as Level II hospitals.

641—150.9(135,77GA,ch1221) Level II regional neonatology centers.

150.9(1) *Definition.*

a. Level II regional neonatology centers provide the same care and services as Level II regional centers with the addition of a demonstrated commitment to providing a higher level of neonatology care. The Level II regional neonatology center will manage high-risk pregnancies and infants born at less than 34 weeks' gestation or weighing less than 1500 grams. Exceptions will be cases for which surgical intervention or pediatric subspecialty care is anticipated or needed.

b. The obstetric service in a Level II regional neonatology center provides services for maternity patients at higher risk than those in Level II hospitals because of the presence of an NICU. However, reasonable efforts should be expended to transfer those patients whose newborns are likely to require a higher intensity of care not available in the Level II regional neonatology center but offered in a Level III center. Efforts should also be made to transfer those patients to a Level III center when the pregnancy has risk factors that require the care of a maternal-fetal medicine specialist.

c. Level II regional neonatology centers provide the same care and services as Level II regional centers. In addition, Level II regional neonatology centers have the following differentiating characteristics:

(1) A defined referral area;

(2) A defined relationship with a Level III center either in Iowa or a contiguous state;

(3) A minimum of two board-eligible or board-certified neonatal/perinatal medicine subspecialists on staff;

(4) Neonatology care available on a continuous 24-hour basis, with at least three obstetricians on staff; and

(5) A medical director in the neonatal intensive care unit who is a full-time, board-eligible or board-certified pediatrician with board eligibility or certification in neonatal/perinatal medicine.

150.9(2) *Functions.* Level II regional neonatology centers have the same functions as Level II regional centers.

a. Accept selected maternal transports based on criteria developed in conjunction with the Level III center;

b. Maintain nursing personnel demonstrating competency in the care of high-risk mothers;

c. Maintain a defined neonatal intensive care unit;

d. Maintain nursing personnel that demonstrate competency in the care of infants in neonatal intensive care;

e. Provide care for infants requiring ventilatory support;

f. Maintain a functioning neonatal transport team for the regional area served; and

g. Provide for follow-up care of high-risk newborns in accordance with the Iowa high-risk infant follow-up program.

150.9(3) *Physical facilities.* Level II regional neonatology centers have the same physical facilities as Level II regional centers; however, they have special equipment for infants born at less than 34 weeks' gestation or weighing less than 1500 grams, and they serve a more complicated patient population.

150.9(4) *Medical personnel.*

a. Level II regional neonatology centers have the same medical personnel as Level II regional centers.

b. The medical director of the neonatal intensive care unit is a full-time, board-eligible or board-certified pediatrician with certification in neonatal/perinatal medicine. This physician maintains a consultative relationship with Level III physicians.

c. Anesthesia providers on staff have special training or experience in obstetric and pediatric anesthesia.

d. A pediatric cardiologist is active on staff.

e. A neonatologist shall be on the premises when unstable critically ill infants are in the Level II regional neonatology center.

150.9(5) *Nursing personnel.* Level II regional neonatology centers have the same minimal requirements for nursing personnel as Level II regional centers. Additionally, registered nurses in the NICU of Level II regional neonatology centers must have specialty certification or advanced training and experience in the nursing management of high-risk neonates and their families.

150.9(6) *Outreach education.* Outreach education is provided to each hospital in the referral area at least once per year. This can be achieved by one or more of the following:

a. Sponsoring an annual conference;

b. Visiting Level I and Level II hospitals;

c. Providing educational programs at the regional center for the staff members of the Level I and Level II hospitals;

d. Sending written educational materials to the Level I and II hospitals.

150.9(7) *Allied health personnel and services.* Level II regional neonatology centers have the same allied health personnel and services available as Level II regional centers, with the addition of the following:

a. Respiratory therapists, certified lab technicians/blood gas technicians, X-ray technologists, and ultrasound technicians with neonatal/perinatal experience available on a 24-hour basis.

b. Social services, with social workers assigned specifically to the maternal and neonatal units.

150.9(8) *Infection control.* Infection control guidelines are the same as for Level II hospitals and Level II regional centers.

150.9(9) *Newborn safety.* Level II regional neonatology centers have at least the same requirements for newborn safety as Level II regional centers.

150.9(10) *Maternal-fetal transport.* Level II regional neonatology centers have the same requirements for maternal-fetal transport as Level II hospitals and Level II regional centers. In addition, Level II regional neonatology centers are expected to provide neonatal transportation services.

150.9(11) *Perinatal care committee.* Level II regional neonatology centers maintain a perinatal care committee with the same required meetings and membership as the Level II hospitals and Level II regional centers.

150.9(12) *Quality improvement.* Centers that routinely provide care to infants born at less than 34 weeks' gestation or weighing less than 1500 grams shall maintain a patient database of all NICU admissions that includes an accounting of patient mortality and morbidity for the benchmarking of results against other centers (national or statewide) and for the purpose of continuous review and quality improvement.

641—150.10(135,77GA,ch1221) Level III centers.

150.10(1) *Definition and function.* Level III centers provide the same care and services as Level II regional centers, plus they manage high-risk pregnancies and neonates, with the possible exception of a few very specialized complications. The Level III center is an extension of the Level II regional center and serves the same regional functions. The differentiating factor between them is primarily one of additional professional staff and more extensive physical facilities. There may be multiple Level III centers in the same city.

150.10(2) *Physical facilities.* Level III centers have the same physical facilities as Level II regional centers; however, they have more equipment and serve a more complicated patient population.

150.10(3) *Medical personnel.*

a. The medical director of the maternal-fetal intensive care unit is a full-time, board-eligible or board-certified obstetrician with certification in maternal-fetal medicine.

b. The medical director of the neonatal intensive care unit is a full-time, board-eligible or board-certified pediatrician with certification in neonatal/perinatal medicine.

c. Anesthesia providers on staff have special training or experience in obstetric and pediatric anesthesia.

d. A pediatric surgeon is on staff.

e. A pediatric cardiologist is on staff.

f. These physicians must be immediately available to the Level III center and reside in the same metropolitan area as the hospital.

g. A neonatologist should be on the premises when unstable critically ill infants are in the Level III center. An obstetrician should be on the premises when unstable critically ill mothers are in the Level III center.

150.10(4) *Nursing personnel.* Level III centers have the same minimal requirements for nursing personnel as Level II regional centers. The nurse managers of the perinatal units in Level III centers have prior experience in maternal or pediatric nursing and have a minimum of a bachelor of science in nursing degree, or a bachelor's degree in a related field.

150.10(5) *Outreach education.* Level III centers have the same responsibilities for outreach education as Level II regional centers.

150.10(6) *Allied health personnel and services.* Level III centers have the same allied health personnel and services as Level II regional centers. Additionally, Level III centers have respiratory therapists, certified lab technicians/blood gas technicians, X-ray technologists and ultrasound technicians with neonatal/perinatal experience available on a 24-hour basis. Level III centers also have social work services with social workers assigned specifically to the maternal and neonatal units.

150.10(7) *Infection control.* Infection control guidelines are the same as for Level II regional centers.

150.10(8) *Newborn safety.* Level III centers have at least the same requirements for newborn safety as Level II regional centers.

150.10(9) *Maternal-fetal transport.* Level III centers have the same requirements for maternal-fetal transport as Level II regional centers. In addition, Level III centers are capable of providing ground and air transportation whose crews have demonstrated competencies in maternal/neonatal resuscitation. Important decisions to be made jointly will include the appropriateness of transport, the best mode of transportation, the need for additional personnel accompanying the transport, and the appropriate medical management to initiate prior to transport.

150.10(10) *Perinatal care committee.* Level III centers maintain a perinatal care committee with additional representation by surgical specialties.

641—150.11(135,77GA,ch1221) Grant or denial of certificate of verification; and offenses and penalties.

150.11(1) Upon receipt of the on-site survey results, the department shall within 30 days issue its decision to grant or deny the hospital a certificate of verification. The department may deny verification or may give a citation and warning, place on probation, suspend, or revoke existing verification if the department finds reason to believe the hospital's perinatal care program has not been or will not be operated in compliance with these rules. The denial, citation and warning, period of probation, suspension, or revocation shall be effected and may be appealed in accordance with the requirements of Iowa Code section 17A.12.

150.11(2) All complaints regarding the operation of a participating hospital's perinatal care program shall be reported to the department and to the department of inspections and appeals.

150.11(3) Complaints and the investigative process shall be treated as confidential to the extent they are protected by Iowa Code section 22.7.

150.11(4) Complaint investigations may result in the department's issuance of a notice of denial, citation and warning, probation, suspension or revocation.

150.11(5) Notice of denial, citation and warning, probation, suspension or revocation shall be effected in accordance with the requirements of Iowa Code section 17A.12. Notice to the hospital of denial, citation and warning, probation, suspension or revocation shall be served by certified mail, return receipt requested, or by personal service.

150.11(6) Any request for a hearing concerning the denial, citation and warning, probation, suspension or revocation shall be submitted by the aggrieved party in writing to the department by certified mail, return receipt requested, within 20 days of the receipt of the department's notice to take action. The address is: Iowa Regionalized System of Perinatal Health Care, Iowa Department of Public Health, Division of Health Promotion and Chronic Disease Prevention, 321 East 12th Street, Lucas State Office Building, Des Moines, Iowa 50319-0075. If the request is made within the 20-day time period, the notice to take action shall be deemed to be suspended pending the hearing. Prior to or at the hearing, the department may rescind the notice upon satisfaction that the reason for the denial, citation and warning, probation, suspension or revocation has been or will be removed. If no request for a hearing is received within the 20-day time period, the department's notice of denial, citation and warning, probation, suspension or revocation shall become the department's final agency action.

150.11(7) Upon receipt of a request for hearing, the request shall be forwarded within five working days to the department of inspections and appeals pursuant to the rules adopted by that agency regarding the transmission of contested cases. The information upon which the adverse action is based and any additional information, which may be provided by the aggrieved party, shall also be provided to the department of inspections and appeals.

150.11(8) The hearing shall be conducted according to the procedural rules of the department of inspections and appeals found in 481—Chapter 10, Iowa Administrative Code.

150.11(9) When the administrative law judge makes a proposed decision and order, it shall be served by certified mail, return receipt requested, or delivered by personal service. That proposed decision and order then becomes the department's final agency action without further proceedings ten days after it is received by the aggrieved party unless an appeal to the director is taken.

150.11(10) Any appeal to the director for review of the proposed decision and order of the administrative law judge shall be filed in writing and mailed to the director by certified mail, return receipt requested, or delivered by personal service within ten days after the receipt of the administrative law judge's proposed decision and order by the aggrieved party. A copy of the appeal shall also be mailed to the administrative law judge. Any request for an appeal shall state the reason for appeal.

150.11(11) Upon receipt of an appeal request, the administrative law judge shall prepare the record of the hearing for submission to the director. The record shall include the following:

a. All pleadings, motions, and rules.

b. All evidence received or considered and all other submissions by recording or transcript.
c. A statement of all matters officially noticed.
d. All questions and offers of proof, objections and rulings on them.
e. All proposed findings and exceptions.
f. The proposed decision and order of the administrative law judge.

150.11(12) The decision and order of the director becomes the department's final agency action upon receipt by the aggrieved party and shall be delivered by certified mail, return receipt requested, or by personal service.

150.11(13) It is not necessary to file an application for a rehearing to exhaust administrative remedies when appealing to the director or the district court as provided in Iowa Code section 17A.19. The aggrieved party to the final agency action of the department who has exhausted all administrative remedies may petition for judicial review of that action pursuant to Iowa Code chapter 17A.

150.11(14) Any petition for judicial review of a decision and order shall be filed in the district court within 30 days after the decision and order becomes final. A copy of the notice of appeal shall be sent to the department by certified mail, return receipt requested, or by personal service. The address is: Iowa Regionalized System of Perinatal Health Care, Iowa Department of Public Health, Division of Health Promotion and Chronic Disease Prevention, 321 East 12th Street, Lucas State Office Building, Des Moines, Iowa 50319-0075.

150.11(15) The party who appeals a final agency action to the district court shall pay the cost of the preparation of a transcript of the contested case hearing for the district court.

150.11(16) Final decisions of the department relating to disciplinary proceedings may be transmitted to the department of inspections and appeals and to the appropriate professional associations or news media.

641—150.12(135,77GA,ch1221) Prohibited acts. A hospital that imparts or conveys, or causes to be imparted or conveyed, that it is a participating hospital in Iowa's regionalized system of perinatal health care, or that uses any other term, such as a designated level of care, to indicate or imply that the hospital is a participating hospital in the regionalized system of perinatal health care without having obtained a certificate of verification from the department is subject to licensure disciplinary action by the department of inspections and appeals, as well as to the application by the director to the district court for a writ of injunction to restrain the use of the term or terms "Level I hospital," "Level II hospital," "Level II regional center," "Level II regional neonatology center," and "Level III center" in relation to the provision of perinatal health care services.

641—150.13(135,77GA,ch1221) Construction of rules. Nothing in these administrative rules shall be construed to restrict a hospital from providing any services for which it is duly authorized.

These rules are intended to implement 1998 Iowa Acts, chapter 1221, section 5, subsection 4*"a"*(2)(c).

[Filed 1/21/99, Notice 11/18/98—published 2/10/99, effective 3/17/99]
[Filed 1/10/07, Notice 11/22/06—published 1/31/07, effective 3/7/07]

CHAPTER 151
TOBACCO USE PREVENTION AND CONTROL COMMUNITY PARTNERSHIP INITIATIVE

641—151.1(142A) Scope. These rules apply to community partnerships established under Iowa Code chapter 142A as part of a comprehensive tobacco use prevention and control initiative to reduce tobacco use by youth and pregnant women, to promote compliance by minors and retailers with tobacco sales laws and ordinances, to enhance the capacity of youth to make healthy choices and to foster a social and legal climate in which tobacco use becomes undesirable and unacceptable.

641—151.2(142A) Community partnership areas. It is the goal of the commission on tobacco use prevention and control that the entire state be divided into multiple community partnership areas, so that all portions of the state are included in a community partnership area and no portion of the state is without the services of a community partnership. Toward this goal, the commission will encourage formation of community partnership areas that incorporate surrounding communities in a manner that does not isolate any geographic region of the state, and encourages optimal use of resources. In addition to the requirements of Iowa Code section 142A.8(1), a community partnership area:

151.2(1) Shall be composed of one or more counties, school districts, economic development enterprise zones, or community empowerment areas.

151.2(2) Shall follow existing boundaries of one or more counties, school districts, economic development enterprise zones, or community empowerment areas.

151.2(3) Shall serve a population of at least 4,000, including a minimum school-age population of 500.

151.2(4) Shall serve a minimum geographic area of one county.

641—151.3(142A) Community partnerships. A community partnership is a public agency or nonprofit organization which utilizes broad community involvement and represents a broad coalition of community groups, organizations, and interests. Community partnerships shall promote a wide range of activities that discourage tobacco use and support smoke-free environments. Some of these activities include developing coalitions with local organizations, conducting educational programs and encouraging policies that support tobacco use prevention and cessation.

641—151.4(142A) Application requirements for community partnerships. In order to qualify for funding through the tobacco use prevention and control program, a public agency or nonprofit organization seeking to be designated as a community partnership must apply to, and be approved by, the department of public health. Only one application per community partnership will be accepted. An application must provide the following information:

151.4(1) A description of the community partnership area to be served by the community partnership, including:

a. The geographic boundaries of the area;

b. Population, including both general population and school-age population, of the area;

151.4(2) A description of the applicant, including a description of the governing structure of the agency or organization, a table of organization, and the applicant's mission statement;

151.4(3) A description of the tobacco use prevention and control services currently provided by the applicant;

151.4(4) A description of the community outreach and educational programming services currently provided by the applicant;

151.4(5) A description of the number of years the applicant has provided tobacco use prevention and control services and the number of clients served annually by the applicant;

151.4(6) A description of the funds currently received by the applicant which are targeted to provide tobacco use prevention and control services, including the source of funds, the dollar amount, and the period of funding;

151.4(7) A list of the other agencies, organizations, and entities currently providing tobacco use prevention and control services in the proposed community partnership area and a description of the tobacco use prevention and control services currently provided by the other agencies, organizations, or entities;

151.4(8) A description of the collaborative efforts the applicant has undertaken with the agencies, organizations, and entities described in subrule 151.4(6) and an action plan describing anticipated collaborative efforts during the funding period;

151.4(9) An assessment of the needs of the community partnership area which incorporates, but is not limited to, the following information for each county in the community partnership area:

a. Tobacco-related information from the community health needs assessment and health improvement plan (CHNA and HIP, Healthy Iowans);

b. Tobacco-related information from the most recent Iowa youth survey;

c. Relevant data regarding tobacco use;

d. Relevant Synar data;

e. Information or data received from other service providers, organizations, or law enforcement agencies;

151.4(10) A description of how the applicant intends to implement the initiative's goals described in Iowa Code section 142A.6(2) in light of the community needs identified in subrule 151.4(11), including a proposed budget and a description of how performance measures shall be developed and utilized;

151.4(11) Identification of the source and amount of local matching funds, services, or support;

151.4(12) A description of how youth (aged 5 to 24 years) will be involved in the community partnership.

[**ARC 1225C**, IAB 12/11/13, effective 1/15/14]

641—151.5(142A) Performance indicators. Periodic reports shall be submitted to the department by the community partnerships. These required reports shall be based on the degree to which the partnerships have achieved goals set out in the application and shall include information such as how many events/meetings were held and how many participants were in attendance.

641—151.6(142A) Application deadline. An applicant seeking to be approved as a community partnership for distribution of funds during the current fiscal year may apply once the RFA/RFP has been posted.

151.6(1) Rescinded IAB 12/11/13, effective 1/15/14.

151.6(2) Any change in the geographic boundaries of a community partnership area after a community partnership has been approved must be submitted to the tobacco use prevention and control division as a request to amend the application. The request shall describe the boundary change, explain the reason for the boundary change and describe any impact the boundary change will have on the information provided in response to rule 641—151.4(142A).

[**ARC 1225C**, IAB 12/11/13, effective 1/15/14]

641—151.7(142A) Distribution of funding.

151.7(1) Applications submitted in accordance with these rules will be evaluated by the administrator of the division of tobacco use prevention and control, or the administrator's designee, to determine whether the application meets the requirements for funding as designated in these rules. The administrator or designee may request additional information from any applicant regarding the content of the application and may condition funding based on an applicant's submission of additional information or based on an applicant's willingness to change any term of the application, including geographic boundaries of the community partnership area.

151.7(2) The department in consultation with the commission shall allocate funding to the community partnerships from the total moneys appropriated to the tobacco use prevention and control initiative. If sufficient funds are available, the department shall distribute the funding allocated to the community partnerships in accordance with this rule.

151.7(3) The department shall fund one community partnership per community partnership area. Funds shall be distributed equitably among the state's community partnership areas based on general population, school-age population, and designation of county or counties which comprise the community partnership area as a rural county or an urban county as defined by the Office of Management and Budget. Available funds will be distributed under the following formulas, using United States Census Bureau annual population estimates:

Rural counties:
$.84 per school-age youth plus an additional $.84 per non-school-age county resident

Urban counties:
$.52 per school-age youth plus an additional $.52 per non-school-age county resident; provided that application of the funding formula results in distribution to a community partnership of a minimum amount per county included in each community partnership area as determined annually by the department in consultation with the commission.

If application of the funding formula would result in distribution of less than the minimum established amount, the department shall distribute to such community partnership no less than the minimum established amount per county included in the community partnership area.

As sufficient funds become available, the department in consultation with the commission may also distribute to community partnerships funds for special or pilot projects within a community partnership area.

151.7(4) Funding received by a community partnership shall be matched on a one-to-four basis. The match may include in-kind services, office support, or other tangible support or offset of costs.

Any offers to assist the applicant in reaching the match must be disclosed to the department in writing. In regard to any cash offers that are declined, the applicant must disclose reasons and rationale as to why these offers were declined.

151.7(5) Prior to receiving funding, a community partnership shall be required to execute a contract with the department.

151.7(6) Funding may be denied on grounds including, but not limited to:

a. Applications from more than one entity have been received covering the same, or portions of the same, geographic area and another application more closely satisfies application criteria.

b. The application is incomplete, untimely, or includes misleading or inaccurate information.

c. Program funds are no longer available.

d. Local matching funds, services, or support is not available.

e. The applicant refuses to execute a contract with the department.

f. The applicant fails to comply with the statute or administrative rules governing this program.

[**ARC 1225C**, IAB 12/11/13, effective 1/15/14]

641—151.8(142A) Gifts. The commission shall solicit and accept gifts of money or services or property from governmental or private sources for use in support of the comprehensive tobacco use prevention and control initiative.

151.8(1) The commission shall not accept gifts of money or services or property from a manufacturer of tobacco products.

a. A gift means a rendering of anything of value in return for which legal consideration of equal or greater value is not given and received. A gift does not include funds deposited by any manufacturer of tobacco products into the tobacco settlement fund.

b. A manufacturer of tobacco products means every person who ships cigarettes or other tobacco products as defined in Iowa Code section 453A.1 into this state from outside the state.

151.8(2) The commission shall not accept a gift of money or services or property from a corporation or other private legal entity which is controlled by a manufacturer of tobacco products. A manufacturer of tobacco products controls a corporation or other private legal entity when the manufacturer possesses, directly or indirectly, the power to direct or cause the direction of the management and policies of a

corporation or other private legal entity, whether through the ownership of voting rights, by contract, or otherwise.

151.8(3) The commission may not accept a gift of money or services or property from a corporation or other private legal entity in which a manufacturer of tobacco products has a noncontrolling interest. A manufacturer of tobacco products has a noncontrolling interest in a corporation or other private legal entity when the manufacturer has a commercial contract for goods or nonmanagement services, or holds the power to vote, or holds proxies representing less than 10 percent of the voting rights of any other person.

151.8(4) The commission, in its discretion, may require any corporation or other private legal entity from which it solicits, or which offers to it, a gift of money or services or property for use in support of the comprehensive tobacco use prevention and control initiative to submit a statement describing the relationship, if any, between the corporation or other private legal entity and a manufacturer of tobacco products.

151.8(5) If the commission accepts a gift from a corporation or other private legal entity under the circumstances described in subrule 151.8(3), the commission may require the gift to be contingent on a waiver by the manufacturer of tobacco products of any right to advertise with regard to, claim responsibility for, or otherwise publicize the gift.

These rules are intended to implement Iowa Code chapter 142A.

[Filed emergency 10/13/00—published 11/1/00, effective 10/13/00]

[Filed emergency 5/25/01—published 6/13/01, effective 5/25/01]

[Filed ARC 1225C (Notice ARC 0973C, IAB 8/21/13), IAB 12/11/13, effective 1/15/14]

CHAPTER 152
TOBACCO USE PREVENTION AND CONTROL FUNDING PROCESS

641—152.1(78GA,HF2565) Scope and purpose. In addition to funding community partnerships in accordance with 641—Chapter 151, it is the goal of the commission on tobacco use prevention and control to provide funding for other programs for the purpose of achieving the goals of the initiative as defined in 2000 Iowa Acts, House File 2565. Toward this end, the commission intends to provide funding on a competitive basis for school programs; a media, marketing, and communications program; and a cessation program for pregnant women.

641—152.2(78GA,HF2565) Funding.

152.2(1) In addition to other requests for proposals necessary to implement the initiative, the commission shall issue a request for proposal (RFP) for the youth program, the media, marketing and communications program, and the cessation program for pregnant women. The RFP for each program shall include the amount of funding available, the project period, the services to be delivered, performance measures, application due date and other relevant time frames, a description of the review process, the review criteria to be used, expected contract terms, and a reference to the appeal process in the event an application is denied.

152.2(2) Applications submitted in accordance with these rules shall be evaluated in accordance with the review process described in the RFP. The administrator of the division of tobacco use prevention and control shall make the final determination regarding funding and shall notify all applicants regarding funding decisions by restricted certified mail, return receipt requested.

641—152.3(78GA,HF2565) Appeals.

152.3(1) Any request for an appeal concerning denial or partial denial of an application for funding shall be submitted by an aggrieved party in writing to the department by certified mail, return receipt requested, within ten days of receipt of the notice of denial. The address is Department of Public Health, Tobacco Use Prevention and Control Division, Lucas State Office Building, 321 E. 12th Street, Des Moines, Iowa 50319. The request for appeal must state the party's complete legal name, street address, telephone number, fax number, and the specific grounds upon which the party challenges the board's denial, including legal authority, if any. The request for appeal commences a contested case.

152.3(2) Upon receipt of an appeal, the appeal shall be forwarded within five working days to the department of inspections and appeals pursuant to the rules adopted by the department regarding transmission of contested cases.

152.3(3) The hearing shall be conducted according to the procedural rules of the department of inspections and appeals found in 481—Chapter 4.

152.3(4) When the hearing officer makes a proposed decision and order, it shall be served by restricted certified mail, return receipt requested, or delivered by personal service. That proposed decision and order then becomes the department's final agency action without further proceeding ten days after it is received by the aggrieved party unless an appeal to the commission is taken as provided in subrule 152.3(5).

152.3(5) Any appeal to the commission for review of the proposed decision and order of the administrative law judge shall be filed in writing and mailed to the commission by certified mail, return receipt requested, or delivered by personal service within ten days after the receipt of the administrative law judge's proposed decision and order by the aggrieved party. A copy of the appeal shall also be mailed to the administrative law judge. Any request for appeal shall state the reasons for appeal.

152.3(6) Upon receipt of an appeal request, the administrative law judge shall prepare the record of the hearing for submission to the commission.

152.3(7) Review of a proposed decision shall be based on the record and limited to the issues raised in the hearing. The issues shall be specified in the notice of appeal of a proposed decision. The party requesting the review shall be responsible for transcribing any tape of the oral proceedings or arranging for a transcript of oral proceedings reported by a certified shorthand reporter.

152.3(8) Each party shall have the opportunity to file exceptions and present briefs. The administrator may set deadlines for the submission of exceptions or briefs. If oral argument will be held, the administrator shall notify all parties of the date, time and location at least ten days in advance.

152.3(9) The commission shall not receive any additional evidence, unless it grants an application to present additional evidence. Any such application must be filed by a party no less than five business days in advance of oral argument. Additional evidence shall be allowed only upon a showing that it is material to the outcome and that there were good reasons for failure to present it at hearing. If an application to present additional evidence is granted, the commission shall order the conditions under which it shall be presented.

152.3(10) The commission's final decision shall be in writing and it may incorporate all or part of the proposed decision.

152.3(11) The decision and order of the commission becomes the department's final agency action pursuant to Iowa Code chapter 17A upon receipt by the aggrieved party and shall be delivered by restricted certified mail, return receipt requested, or by personal service.

These rules are intended to implement Iowa Code chapter 17A and 2000 Iowa Acts, House File 2565.

[Filed emergency 10/13/00—published 11/1/00, effective 10/13/00]

CHAPTER 153
SMOKEFREE AIR

641—153.1(82GA,HF2212) Purpose and scope. The purpose of these rules is to implement Iowa's Smokefree Air Act, enacted to reduce the level of exposure by the general public and employees to environmental tobacco smoke in order to improve the public health of Iowans. These rules apply to public places, places of employment, and certain outdoor areas in the state.

641—153.2(82GA,HF2212) Definitions. For the purposes of this chapter, the following definitions shall apply:

"Ashtray" means any receptacle, including a can, bottle, bowl, tray, or other vessel that is used for extinguishing or disposing of any lighted cigar, cigarette, pipe, or other tobacco product in any manner or form including ash, cigarette butts or filters, or cigar stubs. However, "ashtray" shall not include any receptacle located outdoors and on the perimeter of any public place, the perimeter of the grounds of any public building, the perimeter of school grounds, or the perimeter of any other outdoor space subject to the prohibition in 2008 Iowa Acts, House File 2212, section 3, and rule 641—153.3(82GA,HF2212).

"Bar" means an establishment where one may purchase alcoholic beverages, as defined in Iowa Code section 123.3, for consumption on the premises and in which the serving of food is only incidental to the consumption of those beverages.

"Child care facility" means child care facility as defined by the department of human services pursuant to Iowa Code section 237A.1.

"Child care home" means child care home as defined by the department of human services pursuant to Iowa Code section 237A.1.

"Department" means the Iowa department of public health.

"Entrance" means any doorway to an enclosed area used by the public or employees for ingress to any public place or place of employment, but does not include any doorway designated for use as an exit in an emergency only. "Entrance" also includes the commonly understood points of entry to an outdoor area, subject to the prohibitions of this chapter, such as a driveway, sidewalk, pathway, access road, gate, or dedicated point of entry, but not including a street, road, highway, or sidewalk in the public right-of-way.

"Gaming floor" means gaming floor as defined by the state racing and gaming commission pursuant to Iowa Code section 99F.1.

"Grounds of any public building" means an outdoor area of a public building that is used in connection with the building, including but not limited to a sidewalk or driveway immediately adjacent to the building, but not including a sidewalk in the public right-of-way; a sitting or standing area immediately adjacent to the building; a patio; a deck; a curtilage or courtyard; a swimming or wading pool; a beach; or any other outdoor area as designated by the person having custody or control of the public building. A person having custody or control of a public building may exclude from the designated grounds of any public building the following: a parking lot, the course of play at a golf course, a hiking trail, locations of an individual campsite or campfire, or a lake, river, or other body of water. Nothing in this definition prohibits any owner, operator, manager, or other person having custody or control of an area that is exempt from the prohibitions of 2008 Iowa Acts, House File 2212, section 3, and rule 641—153.3(82GA,HF2212) from declaring the entire area or property a nonsmoking place.

"Hotel and motel" means any building or structure equipped, used, advertised as, or held out to the public to be an inn, hotel, motel, motor inn, or place where sleeping accommodations are furnished for hire to transient guests.

"Incidental to the sale of tobacco products" means that the gross revenue of a retail tobacco store derived from the sale of products other than tobacco products is not more than 20 percent of the retail tobacco store's total gross revenue.

"Infiltrate" means to permeate an area where smoking is prohibited by passing through a wall, ceiling, floor, window, door, or ventilation system to the extent that an individual can smell secondhand smoke.

"Public and private educational facility" means a public school and nonpublic school as defined in Iowa Code section 280.2, a community college as defined in Iowa Code section 260C.2, an accredited private institution as defined in Iowa Code section 261.9, and an institution governed by the board of regents pursuant to Iowa Code section 262.7.

"Public building" means an enclosed area owned, leased, or operated by or under the control of the state government or its political subdivisions.

"Restaurant" means eating establishments, including private and public school cafeterias, which offer food to the public, guests, or employees, including the kitchen and catering facilities in which food is prepared on the premises for serving elsewhere, and including a bar area within a restaurant.

"Retail tobacco store" means a retail store utilized primarily for the sale of tobacco products and accessories and in which the sale of other products is incidental to the sale of tobacco products.

"Seating areas of outdoor sports arenas, stadiums, amphitheaters, or other entertainment venues" means areas designated by the owner, operator, manager, or other person having custody or control of the area to be used primarily to witness entertainment events and shall include, but not be limited to, all chairs, seats, and bleachers whether permanent or temporary; standing room only; general admission or festival-style seating; and any other areas where individuals congregate to witness entertainment events.

"Serving of food incidental to the consumption of alcoholic beverages" means food preparation that is limited to the service of ice, prepackaged snack foods, popcorn, peanuts, and the reheating of commercially prepared foods that do not require assembly, such as frozen pizza, prepackaged sandwiches, or other prepackaged, ready-to-serve products.

"Smoking cessation program" means a course of treatment that is capable of clinical review for evidence-based outcomes that verify that individuals in the program stop smoking and that has been approved for coverage by a private or managed health care plan, Medicaid, Medicare, the Veterans Health Administration, or the United States military.

641—153.3(82GA,HF2212) Prohibition of smoking.

153.3(1) *Public places, places of employment.* Smoking is prohibited and a person shall not smoke in either of the following areas:

a. Public places, as defined in 2008 Iowa Acts, House File 2212.

b. All enclosed areas within places of employment including but not limited to work areas, private offices, conference and meeting rooms, classrooms, auditoriums, employee lounges and cafeterias, hallways, medical facilities, restrooms, elevators, stairways and stairwells, and vehicles owned, leased, or provided by the employer unless otherwise provided under these rules and 2008 Iowa Acts, House File 2212.

153.3(2) *Outdoor areas.* Smoking is prohibited and a person shall not smoke in or on any of the following outdoor areas:

a. The seating areas of outdoor sports arenas, stadiums, amphitheaters and other entertainment venues where members of the general public assemble to witness entertainment events.

b. Outdoor seating or serving areas of restaurants.

c. Public transit stations, platforms, and shelters under the authority of the state or its political subdivisions.

d. School grounds, including parking lots, athletic fields, playgrounds, tennis courts, and any other outdoor area under the control of a public or private educational facility, including inside any vehicle located on such school grounds.

e. The grounds of any public buildings owned, leased, or operated by or under the control of the state government or its political subdivisions, including the grounds of a private residence of any state employee any portion of which is open to the public with the following exceptions:

(1) This paragraph shall not apply to the Iowa state fairgrounds, or fairgrounds as defined in Iowa Code section 174.1.

(2) This paragraph shall not apply to institutions administered by the department of corrections, except that smoking on the grounds shall be limited to designated smoking areas.

(3) This paragraph shall not apply to facilities of the Iowa National Guard as defined in Iowa Code section 29A.1, except that smoking on the grounds shall be limited to designated smoking areas.

641—153.4(82GA,HF2212) Areas where smoking not regulated. Notwithstanding any provision of these rules and 2008 Iowa Acts, House File 2212, to the contrary, the following areas are exempt from the prohibitions of 2008 Iowa Acts, House File 2212, section 3:

153.4(1) Private residences, unless used as a child care facility, child care home, or a health care provider location.

153.4(2) Hotel and motel rooms that are rented to guests and are designated as smoking rooms; provided that not more than 20 percent of the rooms of a hotel or motel rented to guests are designated as smoking rooms, all smoking rooms on the same floor are contiguous, and smoke from smoking rooms does not infiltrate into areas in which smoking is otherwise prohibited under these rules. The status of smoking and nonsmoking rooms shall not be changed, except to provide additional nonsmoking rooms.

153.4(3) Retail tobacco stores, provided that smoke from these locations does not infiltrate into areas in which smoking is otherwise prohibited under these rules.

153.4(4) Private and semiprivate rooms in long-term care facilities, occupied by one or more individuals, all of whom are smokers and have requested in writing to be placed in a room where smoking is permitted, provided that smoke from these locations does not infiltrate into areas in which smoking is otherwise prohibited under these rules and 2008 Iowa Acts, House File 2212.

153.4(5) Private clubs that have no employees, except when being used for a function to which the general public is invited, provided that smoke from these locations does not infiltrate into areas in which smoking is otherwise prohibited under these rules and 2008 Iowa Acts, House File 2212. This exemption shall not apply to any entity that is established for the purpose of avoiding compliance with these rules and 2008 Iowa Acts, House File 2212.

153.4(6) Outdoor areas that are places of employment except those areas where smoking is prohibited pursuant to 2008 Iowa Acts, House File 2212, section 3, subsection 2.

153.4(7) Limousines under private hire; vehicles owned, leased, or provided by a private employer that are for the sole use of the driver and are not used by more than one person in the course of employment either as a driver or passenger; privately owned vehicles not otherwise defined as a place of employment or public place; and cabs of motor trucks or truck tractors if no nonsmoking employees are present.

153.4(8) An enclosed area within a place of employment or public place that provides a smoking cessation program or a medical or scientific research or therapy program, if smoking is an integral part of the program.

153.4(9) Farm tractors, farm trucks, and implements of husbandry when being used for their intended purposes.

153.4(10) Only the gaming floor of premises licensed pursuant to Iowa Code chapter 99F exclusive of any bar or restaurant located within the gaming floor which is an enclosed area and subject to the prohibitions of 2008 Iowa Acts, House File 2212, section 3.

153.4(11) The Iowa veterans home.

641—153.5(82GA,HF2212) Duties of employers, owners, operators, managers, and persons having custody or control of a public place, place of employment, area declared nonsmoking pursuant to 2008 Iowa Acts, House File 2212, section 5, or outdoor areas where smoking is prohibited.

153.5(1) The employer, owner, operator, manager, or person having custody or control of a place where smoking is prohibited under 2008 Iowa Acts, House File 2212, shall:

a. Not permit smoking in a public place, place of employment, outdoor area where smoking is prohibited, or an area declared nonsmoking pursuant to 2008 Iowa Acts, House File 2212, section 5.

b. Inform all current employees and all prospective employees upon application for employment of the prohibitions of 2008 Iowa Acts, House File 2212.

c. Not retaliate against any employee, applicant for employment, or customer that exercises any rights under 2008 Iowa Acts, House File 2212, registers a complaint, or attempts to prosecute a violation of 2008 Iowa Acts, House File 2212.

d. Post signs in and at every entrance to the public place, place of employment, area declared nonsmoking, and outdoor area where smoking is prohibited that clearly and conspicuously inform persons that they are entering a no smoking facility or area.

(1) The signs shall be clear and conspicuous in or at the entrance where posted.

(2) The signs shall be at least 24 square inches in size (for example, 4 inches by 6 inches) and shall be in legible font type.

(3) The signs shall contain the words "No Smoking" or the international "no smoking" symbol; the telephone number for reporting complaints, 1-888-944-2247; and the department of public health Web site, www.IowaSmokefreeAir.gov.

e. Place no smoking signs in every vehicle that constitutes a public place, place of employment, or area declared nonsmoking pursuant to 2008 Iowa Acts, House File 2212, section 5.

(1) Such signs shall be clear and conspicuous from the exterior of the vehicle.

(2) The signs shall be at least 9 square inches (for example, 3 inches by 3 inches) and shall be in legible font type.

(3) The signs shall contain the words "No Smoking" or the international "no smoking" symbol; the telephone number for reporting complaints, 1-888-944-2247; and the department of public health Web site, www.IowaSmokefreeAir.gov.

(4) Nothing in this rule requires the placement of a sign in any vehicle that the director of the department of administrative services or the director of transportation orders to receive a regular registration plate pursuant to Iowa Code section 321.19.

f. Remove all ashtrays from areas where smoking is prohibited.

153.5(2) The owner or operator of a building or facility that contains more than one public place, place of employment, or area declared nonsmoking pursuant to 2008 Iowa Acts, House File 2212, section 5, which is controlled by other employers, owners, or operators shall comply with the provisions of subrule 153.5(1) for the area of the building or facility under the owner's or operator's control.

153.5(3) An employer, owner, or operator of a public place, place of employment or area declared nonsmoking pursuant to 2008 Iowa Acts, House File 2212, section 5, that is within a public place that is owned or operated by another person shall comply with the provisions of subrule 153.5(1) for the area under the control of the employer, owner, or operator within that public place.

153.5(4) An employer, owner, operator, manager, or person having custody or control of a place where smoking is prohibited under 2008 Iowa Acts, House File 2212, shall inform any individual smoking in a place where smoking is prohibited that the individual is violating the smokefree air Act and shall request that the individual stop smoking immediately.

a. If the individual refuses to stop smoking, the employer, owner, operator, manager, or person having custody or control of the place where smoking is prohibited may discontinue service to that individual.

b. If the individual refuses to stop smoking, the employer, owner, operator, manager, or person having custody or control of the place where smoking is prohibited may request that the individual leave the area where smoking is prohibited.

c. If the individual refuses to leave the area where smoking is prohibited, the employer, owner, operator, manager, or person having custody or control of the place where smoking is prohibited may notify the state or local law enforcement agency with jurisdiction over the area where smoking is prohibited.

641—153.6(82GA,HF2212) Duties of other state agencies and political subdivisions. A state agency or political subdivision which inspects public places shall assess compliance with the requirements of these rules and 2008 Iowa Acts, House File 2212, during any inspection process and shall report any violations of 2008 Iowa Acts, House File 2212, to the department.

641—153.7(82GA,HF2212) Leases. Any lease entered into by the state or its political subdivisions on or after July 1, 2008, shall require that all areas where smoking is prohibited in 2008 Iowa Acts, House File 2212, section 3, comply with the provisions of 2008 Iowa Acts, House File 2212.

641—153.8(82GA,HF2212) Complaints and enforcement.

153.8(1) *Duties of department.* The department shall maintain a system for receiving and investigating complaints against persons who own, operate, manage, or otherwise have custody or control of a place where smoking is prohibited and who fail to comply with the provisions of 2008 Iowa Acts, House File 2212.

a. Pursuant to 2008 Iowa Acts, House File 2212, section 9, subsection 7, the department may designate one or more public agencies through a 28E agreement or other written contract to assist with the enforcement of 2008 Iowa Acts, House File 2212.

b. The department may refer complaints regarding a violation of 2008 Iowa Acts, House File 2212, to the law enforcement authorities of the state or of the political subdivision of the state in which the alleged violation occurred.

153.8(2) *Enforcement against a person who smokes in an area where smoking is prohibited.* Pursuant to 2008 Iowa Acts, House File 2212, section 9, subsection 7, the department designates the law enforcement authorities of the state and of each political subdivision of the state to assist with the enforcement of 2008 Iowa Acts, House File 2212. A peace officer may issue a citation in lieu of arrest pursuant to Iowa Code chapter 805 against a person who smokes in an area where smoking is prohibited pursuant to 2008 Iowa Acts, House File 2212, and such person shall pay a civil penalty pursuant to Iowa Code section 805.8C(3)*"a"* for each violation.

153.8(3) *Enforcement against a person who owns, operates, manages, or otherwise has control of a place where smoking is prohibited.* Pursuant to 2008 Iowa Acts, House File 2212, section 9, subsection 7, the department designates the law enforcement authorities of the state and of each political subdivision of the state to assist with the enforcement of 2008 Iowa Acts, House File 2212. The department or its designee may initiate a civil action against an owner, operator, manager, or person who otherwise has custody or control of a place where smoking is prohibited pursuant to 2008 Iowa Acts, House File 2212, and such person shall pay the applicable civil penalty pursuant to 2008 Iowa Acts, House File 2212, section 9.

153.8(4) *Manner of filing a complaint.* Any person may register a complaint with the department by calling the toll-free number, 1-888-944-2247, or registering a complaint on the department's Web site, www.IowaSmokefreeAir.gov, or downloading a complaint form from the department's Web site and mailing the complaint form to the department at Department of Public Health, Division of Tobacco Use Prevention and Control, Lucas State Office Building, 321 East 12th Street, Des Moines, Iowa 50319.

153.8(5) *Contents of the complaint.* A complaint filed with the department shall include:

a. The name or location of the public place, place of employment, area declared a nonsmoking place pursuant to 2008 Iowa Acts, House File 2212, section 5, or outdoor area where smoking is prohibited which is the subject of the complaint;

b. A description of the occurrence that prompted the complaint; and

c. Any other information relevant to the occurrence.

153.8(6) *Review of complaint by department.* Upon receipt of a complaint, the department or its designee may contact the individual making the complaint to confirm the details of the complaint and obtain any additional information.

153.8(7) *Information from inspections.* Information received by the department pursuant to rule 641—153.6(82GA,HF2212) of one or more violations of 2008 Iowa Acts, House File 2212, as a result of an inspection of a public place by the state or political subdivision of the state shall be considered a credible complaint under this rule.

153.8(8) *Notice of potential violation.* If the department determines that a complaint against a public place, place of employment, area declared nonsmoking pursuant to 2008 Iowa Acts, House File 2212, section 5, or outdoor areas where smoking is prohibited is credible, the department shall:

a. For the first complaint.

(1) Issue a written notice of potential violation to the owner, operator or person having custody or control including the details of the complaint.

(2) The notice shall include educational materials about how to comply with 2008 Iowa Acts, House File 2212, and information on whom to contact for further information and assistance for compliance.

b. For the second complaint in one year.

(1) Issue a second notice of potential violation to the owner, operator, or person having custody or control.

(2) In addition, the department may authorize one or more public agencies to conduct a compliance check of the location.

(3) In addition, the department may pursue the civil penalties provided for in 2008 Iowa Acts, House File 2212, section 9, subsection 2; may refer the complaint to the appropriate authority for enforcement of the civil penalties provided for in 2008 Iowa Acts, House File 2212, section 9, subsection 2; or may pursue any other remedy authorized by 2008 Iowa Acts, House File 2212.

c. For the third and subsequent complaints of a potential violation within one year.

(1) Issue a subsequent notice of potential violation to the owner, operator, or person having custody or control.

(2) In addition, the department may authorize one or more public agencies to conduct a compliance check of the location.

(3) In addition, the department may pursue the civil penalties provided for in 2008 Iowa Acts, House File 2212, section 9, subsection 2; may refer the complaint to the appropriate authority for enforcement of the civil penalties provided for in 2008 Iowa Acts, House File 2212, section 9, subsection 2; or may pursue any other remedy authorized by 2008 Iowa Acts, House File 2212.

641—153.9(82GA,HF2212) Limitation of rules. Nothing in these rules is intended to limit any other state administrative rule or federal regulation that prohibits smoking.

These rules are intended to implement 2008 Iowa Acts, House File 2212.

[Filed emergency 6/30/08—published 7/30/08, effective 7/1/08]
[Filed 11/12/08, Notice 7/30/08—published 12/3/08, effective 1/7/09]

CHAPTER 154
MEDICAL CANNABIDIOL ACT REGISTRATION CARD PROGRAM

641—154.1(85GA,SF2360) Definitions. For the purposes of these rules, the following definitions shall apply:

"Cannabidiol" means a nonpsychoactive cannabinoid found in the plant *Cannabis sativa L.* or *Cannabis indica* or any other preparation thereof that is essentially free from plant material, and has a tetrahydrocannabinol level of no more than 3 percent.

"Date of expiration" means one year from the date of issuance of the cannabidiol registration card by the department of transportation.

"Date of issuance" means the date of issuance of the cannabidiol registration card by the department of transportation.

"Department" means the Iowa department of public health.

"Department of transportation" means the Iowa department of transportation.

"Intractable epilepsy" means an epileptic seizure disorder for which standard medical treatment does not prevent or significantly ameliorate recurring, uncontrolled seizures or for which standard medical treatment results in harmful side effects.

"Neurologist" means an allopathic or osteopathic physician board-certified in neurology in good standing and licensed under Iowa Code chapter 148.

"Patient" means a person who is a permanent resident of the state of Iowa who suffers from intractable epilepsy and has received a recommendation from a neurologist for the medical use of cannabidiol pursuant to 2014 Iowa Acts, Senate File 2360.

"Permanent resident" means a natural person who physically resides in Iowa as the person's principal and primary residence and who establishes evidence of such residency by providing the department with one of the following:

1. A valid Iowa driver's license,
2. A valid Iowa nonoperator's identification card,
3. A valid Iowa voter registration card,
4. A current Iowa vehicle registration certificate,
5. A utility bill,
6. A statement from a financial institution,
7. A residential lease agreement,
8. A check or pay stub from an employer,
9. A child's school or child care enrollment documents,
10. Valid documentation establishing a filing for homestead or military tax exemption on property located in Iowa, or
11. Other valid documentation as deemed acceptable by the department to establish residency.

"Primary caregiver" means a person, at least 18 years of age, who has been designated by a patient's neurologist or a person having custody of a patient, as being necessary to take responsibility for managing the well-being of the patient with respect to the medical use of cannabidiol pursuant to the provisions of 2014 Iowa Acts, Senate File 2360.

"State" means a state of the United States, the District of Columbia, Puerto Rico, the Virgin Islands, Guam, American Samoa, and the Commonwealth of the Northern Mariana Islands.

[**ARC 1640C**, IAB 10/1/14, effective 1/30/15]

641—154.2(85GA,SF2360) Neurologist recommendation—medical use of cannabidiol.

154.2(1) A neurologist who has examined and treated a patient suffering from intractable epilepsy may provide, but has no duty to provide, a written recommendation for the patient's medical use of cannabidiol to treat or alleviate symptoms of intractable epilepsy if no other satisfactory treatment options exist for the patient and all of the following conditions apply:

a. The patient is a permanent resident of Iowa.

b. A neurologist has treated the patient for intractable epilepsy for at least six months. For purposes of this treatment period, and notwithstanding 2014 Iowa Acts, Senate File 2360, section 3, subsection 4, treatment provided by a neurologist may include treatment by a neurologist licensed in another state and in good standing.

c. The neurologist has tried and documented alternative treatment options that have not alleviated the patient's symptoms.

d. The neurologist determines the risks of recommending the medical use of cannabidiol are reasonable in light of the potential benefit for the patient and has documented a discussion of the risks and benefits with the patient or the patient's parent or legal guardian.

e. The neurologist maintains a patient treatment plan. The neurologist shall have the sole, exclusive authority to recommend the use and amount of cannabidiol, if any, in the treatment plan, and shall recommend in the treatment plan only the oral or transdermal administration of cannabidiol.

f. The neurologist shall be available to provide follow-up care and treatment to the patient, including but not limited to patient examinations; however, this rule shall not restrict the authority of a neurologist to terminate the physician-patient relationship, provided that such termination is effectuated in accordance with rule 653—13.7(147,148,272C).

154.2(2) The neurologist is required to use the written recommendation section of the application form provided for this purpose on the department's Web site (www.idph.state.ia.us).

154.2(3) The neurologist, or authorized persons in the neurologist's office or clinic, is required to complete the written recommendation section of the application form and send the application to the department's address as provided on the application form.

154.2(4) A neurologist who provides a written recommendation pursuant to this chapter shall maintain a record-keeping system for all patients for whom the neurologist has recommended the medical use of cannabidiol to treat or alleviate symptoms of intractable epilepsy.

154.2(5) A neurologist who provides a written recommendation pursuant to this chapter is required to participate in any survey that will be conducted by the department on the implementation of the medical cannabidiol Act. Any such survey will adhere to the federal Health Insurance Portability and Accountability Act of 1996.

[**ARC 1640C**, IAB 10/1/14, effective 1/30/15]

641—154.3(85GA,SF2360) Cannabidiol registration card—application and issuance to patient.

154.3(1) The department may approve the issuance of a cannabidiol registration card by the department of transportation to a patient who:

a. Is at least 18 years of age.

b. Is a permanent resident of Iowa.

c. Requests the patient's neurologist to submit to the department, pursuant to rule 641—154.2(85GA,SF2360), a written recommendation signed by the neurologist that the patient may benefit from the medical use of cannabidiol.

d. Is listed as the patient on the application form submitted to the department, on a form created by the department in consultation with the department of transportation and available at the department's Web site (www.idph.state.ia.us) that contains all of the following:

(1) The patient's full legal name, Iowa residence address, mailing address (if different from the patient's residence address), telephone number, date of birth, and sex designation. The patient shall not provide as a mailing address an address for which a forwarding order is in place.

(2) A copy of the patient's valid photo identification. Acceptable photo identification includes:

1. A valid Iowa driver's license,

2. A valid Iowa nonoperator's identification card, or

3. An alternative form of valid photo identification. A patient who possesses or is eligible for an Iowa driver's license or an Iowa nonoperator's identification card shall present such document as valid photo identification. A patient who is ineligible to obtain an Iowa driver's license or an Iowa nonoperator's identification card may apply for an exemption and request submission of an alternative form of valid photo identification. A patient who applies for an exemption is subject to verification of the

patient's identity through a process established by the department and the department of transportation to ensure the genuineness, regularity, and legality of the alternative form of valid photo identification.

(3) Full name, address, and telephone number of the patient's neurologist.

(4) Full legal name, residence address, date of birth, and telephone number of each primary caregiver of the patient, if any.

(5) An attestation as to the truthfulness and accuracy of the information provided by the patient on the application.

154.3(2) Upon the completion, verification, and approval of the patient's application, the department shall notify the department of transportation that the patient may be issued a cannabidiol registration card.

154.3(3) A cannabidiol registration card issued to a patient by the department of transportation shall contain all of the following:

a. The patient's full legal name, Iowa residence address, date of birth, and sex designation, as shown on the patient's Iowa driver's license, nonoperator's identification card, or alternative form of valid photo identification provided pursuant to paragraph 154.3(1)*"d"*(2)"3." If the patient's name, Iowa residence address, date of birth, or sex designation has changed since the issuance of the patient's Iowa driver's license, nonoperator's identification card, or alternative form of valid photo identification, the patient shall first update the patient's Iowa driver's license or nonoperator's identification card to reflect the current information, according to the procedures set forth in 761—subrule 605.11(2), 761—subrule 605.25(4), or rule 761—630.3(321), or shall update the alternative form of valid photo identification in accordance with the process of the issuing agency.

b. The date of issuance and the date of expiration.

c. A distinguishing registration number that is not the patient's social security number.

d. The patient's signature. The signature shall be without qualification and shall contain only the patient's usual signature without any other titles, characters, or symbols. The patient's signature certifies, under penalty of perjury and pursuant to the laws of the state of Iowa, that the statements made and information provided in the patient's application for a cannabidiol registration card are true and correct. The patient's signature shall be captured electronically.

e. A color photograph of the patient.

f. A statement that the cannabidiol registration card is not valid for identification purposes.

154.3(4) A patient in possession of a valid cannabidiol registration card issued pursuant to this rule shall not possess a quantity of cannabidiol oil in excess of 32 ounces.

154.3(5) An authorization to use cannabidiol or marijuana for medicinal purposes issued by another state, territory, or jurisdiction does not satisfy the requirements of 2014 Iowa Acts, Senate File 2360, or these rules for the issuance of a cannabidiol registration card.

[**ARC 1640C**, IAB 10/1/14, effective 1/30/15]

641—154.4(85GA,SF2360) Cannabidiol registration card—application and issuance to primary caregiver.

154.4(1) For a patient in a primary caregiver's care, the department may approve the issuance of a cannabidiol registration card by the department of transportation to a primary caregiver who:

a. Is at least 18 years of age.

b. Requests the patient's neurologist to submit to the department, pursuant to rule 641—154.2(85GA,SF2360), a written recommendation signed by the neurologist that the patient may benefit from the medical use of cannabidiol pursuant to 2014 Iowa Acts, Senate File 2360, section 4.

c. Is listed as a primary caregiver on the application form submitted to the department, on a form created by the department in consultation with the department of transportation and available at the department's Web site (www.idph.state.ia.us) that contains all of the following:

(1) The primary caregiver's full legal name, residence address, mailing address (if different from the primary caregiver's residence address), telephone number, date of birth, and sex designation. The primary caregiver shall not provide as a mailing address an address for which a forwarding order is in place.

(2) The patient's full legal name.

(3) A copy of the primary caregiver's valid photo identification. Acceptable photo identification includes:

1. A valid Iowa driver's license,

2. A valid Iowa nonoperator's identification card,

3. If the primary caregiver is not a resident of the state of Iowa, a valid state-issued driver's license or nonoperator's identification card issued by a state other than Iowa, or

4. An alternative form of valid photo identification. A primary caregiver who possesses or is eligible for a driver's license or a nonoperator's identification card shall present such document as valid photo identification. A primary caregiver who is ineligible to obtain a driver's license or a nonoperator's identification card may apply for an exemption and request submission of an alternative form of valid photo identification. A primary caregiver who applies for an exemption is subject to verification of the primary caregiver's identity through a process established by the department and the department of transportation to ensure the genuineness, regularity, and legality of the alternative form of valid photo identification.

(4) Full name, address, and telephone number of the patient's neurologist.

(5) An attestation as to the truthfulness and accuracy of the information provided by the primary caregiver on the application.

154.4(2) Upon the completion, verification, and approval of the primary caregiver's application, the department shall notify the department of transportation that the primary caregiver may be issued a cannabidiol registration card.

154.4(3) A cannabidiol registration card issued to a primary caregiver by the department of transportation shall contain all of the following:

a. The primary caregiver's full legal name, current residence address, date of birth, and sex designation, as shown on the primary caregiver's state-issued driver's license, nonoperator's identification card, or alternative form of valid photo identification provided pursuant to paragraph 154.4(1)*"c"*(3)"4." If the primary caregiver's name, current residence address, date of birth, or sex designation has changed since issuance of the primary caregiver's Iowa-issued driver's license, nonoperator's identification card, or other form of valid photo identification, the primary caregiver shall first update the primary caregiver's Iowa-issued driver's license or nonoperator's identification card according to the procedures set forth in 761—subrule 605.11(2), 761—subrule 605.25(4), or rule 761—630.3(321) or update the alternative form of valid photo identification in accordance with the process of the issuing agency.

b. The date of issuance and the date of expiration.

c. A distinguishing registration number that is not the primary caregiver's social security number.

d. The primary caregiver's signature. The signature shall be without qualification and shall contain only the primary caregiver's usual signature without any other titles, characters, or symbols. The primary caregiver's signature certifies, under penalty of perjury and pursuant to the laws of the state of Iowa, that the statements made and information provided in the primary caregiver's application for a cannabidiol registration card are true and correct. The primary caregiver's signature shall be captured electronically.

e. A color photograph of the primary caregiver.

f. A statement that the cannabidiol registration card is not valid for identification purposes.

g. A statement distinguishing the cannabidiol registration cardholder as a primary caregiver.

h. The full name of each patient in the primary caregiver's care, as approved by the department in its notice to the department of transportation.

154.4(4) A primary caregiver in possession of a valid cannabidiol registration card issued pursuant to this rule shall not possess a quantity of cannabidiol oil in excess of 32 ounces per patient.

154.4(5) An authorization to use, or to act as a primary caregiver for a patient authorized to use, cannabidiol or marijuana for medicinal purposes issued by another state, territory, or jurisdiction does not satisfy the requirements of 2014 Iowa Acts, Senate File 2360, or these rules for the issuance of a cannabidiol registration card.

[**ARC 1640C**, IAB 10/1/14, effective 1/30/15]

641—154.5(85GA,SF2360) Tamperproofing. The department of transportation shall issue a cannabidiol registration card by a method or process which prevents as nearly as possible the alteration, reproduction, or superimposition of a photograph on the cannabidiol registration card without ready detection.
[**ARC 1640C**, IAB 10/1/14, effective 1/30/15]

641—154.6(85GA,SF2360) Denial and cancellation. The department may deny an application for a cannabidiol registration card, or may cancel or direct the department of transportation to cancel a cannabidiol registration card, for any of the following reasons:

1. Information contained in the application is illegible, incomplete, falsified, misleading, deceptive, or untrue.

2. The department or the department of transportation is unable to verify the identity of the applicant from the photo identification or other documentation presented pursuant to paragraph 154.3(1)*"d"*(2)"3" or 154.4(1)*"c"*(3)"4."

3. The applicant violates or fails to satisfy any of the provisions of 2014 Iowa Acts, Senate File 2360, or these rules.
[**ARC 1640C**, IAB 10/1/14, effective 1/30/15]

641—154.7(85GA,SF2360) Appeal. If the department denies an application for or cancels a cannabidiol registration card, the department shall inform the applicant or cardholder of the denial or cancellation and state the reasons for the denial or cancellation in writing. An applicant or cardholder may appeal the denial or cancellation of a cannabidiol registration card by submitting a request for appeal to the department by certified mail, return receipt requested, within 20 days of receipt of the notice of denial or cancellation. The department's address is Iowa Department of Public Health, Lucas State Office Building, 321 E. 12th Street, Des Moines, Iowa 50319-0075. Upon receipt of a request for appeal, the department shall forward the request within five working days to the department of inspections and appeals. A contested case hearing shall be conducted in accordance with 641—Chapter 173.
[**ARC 1640C**, IAB 10/1/14, effective 1/30/15]

641—154.8(85GA,SF2360) Duplicate card.

154.8(1) *Lost, stolen, or destroyed card.* To replace a cannabidiol registration card that is lost, stolen, or destroyed, a cardholder shall present to the department of transportation the cardholder's valid state-issued driver's license, nonoperator's identification card, or alternative form of valid photo identification provided pursuant to paragraph 154.3(1)*"d"*(2)"3" or 154.4(1)*"c"*(3)"4."

154.8(2) *Change in card information and voluntary replacement.*

a. To replace a cannabidiol registration card that is damaged, the cardholder shall surrender to the department of transportation the card to be replaced and present the cardholder's valid state-issued driver's license, nonoperator's identification card, or alternative form of valid photo identification provided pursuant to paragraph 154.3(1)*"d"*(2)"3" or 154.4(1)*"c"*(3)"4."

b. A patient or primary caregiver to whom a cannabidiol registration card is issued shall notify the department of a change in current residence address, name, or sex designation listed on the card, within ten calendar days of the change. To replace a cannabidiol registration card to change the current residence address, name, or sex designation listed on the card, the cardholder shall surrender to the department of transportation the card to be replaced and present a valid state-issued driver's license, nonoperator's identification card, or alternative form of valid photo identification provided pursuant to paragraph 154.3(1)*"d"*(2)"3" or 154.4(1)*"c"*(3)"4" that has been updated according to the procedures established by the state or agency of issuance to reflect the requested residence address, name, or sex designation.

c. To replace a cannabidiol registration card held by a primary caregiver to change the patient or patients listed on the primary caregiver's card, the primary caregiver shall submit a new application to the department pursuant to rule 641—154.4(85GA,SF2360). A cannabidiol registration card issued pursuant to this paragraph shall not be considered a duplicate card.

154.8(3) *Expiration date.* A duplicate cannabidiol registration card shall have the same expiration date as the cannabidiol registration card being replaced, changed, or amended.
[**ARC 1640C**, IAB 10/1/14, effective 1/30/15]

641—154.9(85GA,SF2360) Renewal. A cannabidiol registration card shall be valid for one year from the date of issuance unless canceled pursuant to rule 641—154.6(85GA,SF2360).

154.9(1) A cardholder seeking renewal of a cannabidiol registration card shall submit a renewal application to the department at least 60 days prior to the date of expiration.

a. A patient applying for renewal of a cannabidiol registration card shall submit a renewal application to the department on a form approved by the department.

b. A primary caregiver applying for a renewal of a cannabidiol registration card shall submit a renewal application to the department on a form approved by the department.

154.9(2) A cardholder who fails to renew the cannabidiol registration card may not lawfully possess cannabidiol pursuant to this chapter.
[**ARC 1640C**, IAB 10/1/14, effective 1/30/15]

641—154.10(85GA,SF2360) Confidentiality. The department shall maintain a confidential file of the names of each patient to or for whom the department approves the issuance of a cannabidiol registration card and the name of each primary caregiver to whom the department issues a cannabidiol registration card under 2014 Iowa Acts, Senate File 2360, section 5.

154.10(1) Personally identifiable information of patients and primary caregivers shall be maintained as confidential and is not accessible to the public. The department and the department of transportation shall release aggregate and statistical information regarding the medical cannabidiol act registration card program in a manner which prevents the identification of any patient or primary caregiver.

154.10(2) Personally identifiable information of patients and primary caregivers may be disclosed under the following limited circumstances:

a. To authorized employees or agents of the department and the department of transportation as necessary to perform the duties of the department and the department of transportation pursuant to this chapter.

b. To authorized employees of state or local law enforcement agencies located in Iowa, solely for the purpose of verifying that a person is lawfully in possession of a cannabidiol registration card issued pursuant to this chapter.

c. To a patient, primary caregiver, or neurologist, upon written authorization of the patient or primary caregiver.
[**ARC 1640C**, IAB 10/1/14, effective 1/30/15]

641—154.11(85GA,SF2360) Agreement with department of transportation. The department may enter into a chapter 28E agreement with the department of transportation to facilitate the issuance of cannabidiol registration cards. The agreement may include provisions which govern the issuance, denial, and cancellation of cannabidiol registration cards and the sharing of information between the department and the department of transportation.
[**ARC 1640C**, IAB 10/1/14, effective 1/30/15]

These rules are intended to implement 2014 Iowa Acts, Senate File 2360.

[Filed ARC 1640C (Notice ARC 1571C, IAB 8/6/14), IAB 10/1/14, effective 1/30/15]

CHAPTER 155
LICENSURE STANDARDS FOR SUBSTANCE ABUSE AND PROBLEM GAMBLING TREATMENT PROGRAMS

[Prior to 7/27/88, see Substance Abuse, Iowa Department of[805] Ch 3]
[Prior to 3/29/06, see 643—Ch 3]

641—155.1(125,135) Definitions. Unless otherwise indicated, the following definitions shall apply to the specific terms used in these rules:

"Accreditation body" means a national or not-for-profit body or organization recognized by the committee as meeting the criteria of the committee for deemed status.

"Acute intoxication or withdrawal potential" is a category to be considered in the ASAM-PPC-2R criteria. This category evaluates client/patient's current status of intoxication and potential for withdrawal complications. Historical information about client/patient's withdrawal patterns may also be considered.

"Administration" means the direct application of a prescription drug, whether by injection, inhalation, ingestion, or any other means, to the body of a client/patient or research subject by one of the following:

1. A practitioner or the practitioner's authorized agent.
2. The client/patient or research subject at the direction of a practitioner.

"Admission" means the point in an individual's relationship with the program at which the screening process has been completed and the individual is entitled to receive treatment services.

"Admission criteria" means specific ASAM-PPC-2R criteria to be considered in determining appropriate client/patient placement and resultant referral to a level of care (substance abuse treatment only). Criteria vary in intensity and are organized into categories to be used by treatment programs for assessment, to determine appropriate level of care, and for treatment planning.

"Affiliation agreement" means a written agreement between the governing authority of the program and another organization under the terms of which specified services, space or personnel are provided to one organization by the other, but without exchange of moneys.

"Applicant" means any treatment program which has applied for a license or renewal thereof.

"Application" means the process through which a treatment program applies for a license or renewal as outlined in the application procedures.

"ASAM-PPC-2R" means the American Society of Addiction Medicine Patient Placement Criteria for the Treatment of Substance-Related Disorders, Second Edition, Revised.

"Assessment" means the ongoing process of identifying a diagnosis, ruling out other diagnoses, and determining the level of care needed by the client/patient.

"Biomedical conditions and complications" means one category to be considered in the ASAM-PPC-2R criteria. This category evaluates client/patient's current physical condition. Historical information on client/patient's medical/physical functioning may also be considered. This category includes biological and physical aspects of the medical assessment and treatment of a client/patient. Physical problems may be the direct result of a substance use disorder, or be independent of and interactive with such a disorder, thus affecting the total treatment plan and prognosis.

"Board" means the state board of health created pursuant to Iowa Code chapter 136.

"Case management" means the process of using predefined criteria to evaluate the necessity and appropriateness of client/patient care.

"Chemical dependency" means alcohol or drug dependence or psychoactive substance use disorder as defined by the current Diagnostic and Statistical Manual of Mental Disorders, Fourth Edition (DSM IV), criteria or by other standardized and widely accepted criteria.

"Chemical dependency rehabilitation services" means those individual or group services that are directly related to chemical dependency or the individual treatment plan. These services include individual, group and family counseling, educational services, self-help groups and structured recreational activities. They do not include active employment or education courses beyond the secondary level.

"Chemical substance" means alcohol, wine, spirits and beer as defined in Iowa Code chapter 123 and controlled substances as defined in Iowa Code section 124.101.

"Client/patient" means an individual who is a substance abuser or a problem gambler or is chemically dependent, has been assessed as appropriate for services, and for whom screening procedures have been completed.

"Clinical oversight" means oversight provided by an individual who, by virtue of education, training and experience, is capable of assessing the psychosocial history of a client/patient to determine the most appropriate treatment plan. The person providing oversight shall be designated by the treatment program.

"Clinically managed high-intensity residential services (Level III.5)" means high-intensity residential services designed to address significant problems with living skills. The prime example of Level III.5 care is the therapeutic community, which provides a highly structured recovery environment in combination with moderate- to high-intensity professional clinical services to support and promote recovery. Client/patients must participate in at least 50 hours of structured chemical dependency rehabilitation services per week.

"Clinically managed low-intensity residential services (halfway house) (Level III.1)" means low-intensity professional addiction treatment services offered at least five hours per week. Treatment is directed toward applying recovery skills, preventing relapse, promoting personal responsibility and reintegrating the resident into the worlds of work, education and family life. The services may include individual, group and family therapy. Mutual/self-help meetings are available on site.

"Clinically managed medium-intensity residential services (Level III.3)" are frequently referred to as extended or long-term care. Level III.3 programs provide a structured recovery environment in combination with medium-intensity professional clinical services to support and promote recovery. Client/patients must participate in at least 30 hours of structured chemical dependency rehabilitation services per week.

"Clinically managed services" means clinically managed services in which treatment is directed by addiction specialists rather than by medical professionals. They serve residents whose problems in the area of emotional/behavioral concerns, treatment acceptance, relapse potential, or recovery environment are the primary focus of treatment and problems in the areas of intoxication/withdrawal (Dimension 1) and biomedical concerns (Dimension 2), if any, are minimal.

"Committee" means the substance abuse and gambling treatment program committee appointed by the state board of health pursuant to Iowa Code section 136.3(13). The committee shall consist of three board members who are recommended by the board chairperson and approved by the board, including two members who have direct experience with substance abuse treatment or prevention and one member who represents the general public. The committee chairperson shall be one of the members who has substance abuse treatment or prevention experience as recommended by the board chairperson and approved by the board.

"Concerned family member" or *"concerned person"* means an individual who is seeking treatment services due to problems arising from the person's involvement or association with a substance abuser, chemically dependent individual, problem gambler or client/patient and who is negatively affected by the behavior of the substance abuser, chemically dependent individual, problem gambler or client/patient.

"Continuing care" means a Level I service of the ASAM-PPC-2R criteria, which provides a specific period of structured therapeutic involvement designed to enhance, facilitate and promote transition from primary care to ongoing recovery. There shall not be any required frequency of review for continuing care or frequency of review of treatment plan by client/patient and counselor.

"Continuing service and discharge criteria" means, in accordance with ASAM-PPC-2R, during the process of client/patient assessment, certain problems and priorities are identified as justifying admission to a particular level of care and the resolution of those problems and priorities determines when a client/patient can be treated at a different level of care or discharged from treatment. New problems may require services that can be provided effectively at the same level of care or may require a more intensive or less intensive level of care.

"Continuum of care" means a structure of interlinked treatment modalities and services designed so that a client/patient's changing needs will be met as the client/patient moves through the treatment and recovery process.

"Contract" means a formal legal document adopted by the governing authority of the program and any other organization, agency, or individual that specifies services, personnel or space to be provided to the program as well as the moneys to be expended in the exchange.

"Counselor" means an individual who, by virtue of education, training or experience, provides treatment, which includes advice, opinion, or instruction to an individual or in a group setting to allow an opportunity for a person to explore the person's problems related directly or indirectly to substance abuse, chemical dependence or problem gambling.

"Culturally and environmentally specific" means integrating into the assessment and treatment process the ideas, customs, beliefs, and skills of a given population, as well as an acceptance, awareness, and celebration of diversity regarding conditions, circumstances and influences surrounding and affecting the development of an individual or group.

"Deemed status" means that the committee and division will accept a committee-approved, outside accreditation body's review, assessment and accreditation of a program, component or service of a program/organization's operations and services. Programs which received deemed status approval are exempt from routine licensure requirements; however, such programs are subject to all other provisions of this chapter.

"Department" means the Iowa department of public health.

"Designee" means the staff person or counselor who is delegated tasks, duties and responsibilities normally performed by the treatment supervisor, treatment director or executive director.

"Detoxification" means the process of withdrawing a person from a specific psychoactive substance in a safe and effective manner. ASAM-PPC-2R detoxification levels of care include Levels I-D, II-D, III.2-D, III.7-D, and IV-D.

"Director" means the director of the Iowa department of public health.

"Discharge planning" means the process, begun at admission, of determining a client/patient's continued need for treatment services and of developing a plan to address ongoing client/patient posttreatment needs. Discharge planning may or may not include a document identified as a discharge plan.

"Division" means the division of behavioral health.

"Emergency admission" means an admission due to an emergency situation with placement screening criteria being applied as soon after admission as possible.

"Emotional, behavioral or cognitive conditions and complications" is a category to be considered in the ASAM-PPC-2R criteria. This category evaluates client/patient's current emotional, behavioral, and cognitive status. Emotional, behavioral or cognitive status may include, but is not limited to, psychiatric conditions, psychological or emotional/behavioral complications, poor impulse control, changes in mental status, or transient neuropsychiatric complications and the behavior that accompanies or follows these emotional states. Historical information on client/patient's emotional/behavioral functioning may also be considered.

"Evaluation" means the process to evaluate the client/patient's strengths, weaknesses, problems, and needs for the purpose of defining a course of treatment. This includes use of the standardized placement screening and any additional client/patient profile information and development of a comprehensive treatment plan.

"Extended outpatient treatment" means a Level I service of the ASAM-PPC-2R criteria, which is an organized, nonresidential service. Extended outpatient treatment services usually are provided in regularly scheduled sessions which include less than nine treatment hours a week for adults or less than six treatment hours a week for adolescents. For problem gambling client/patients, extended outpatient treatment services may be offered in conjunction with transitional housing.

"Facility" means a hospital, detoxification center, institution or program licensed under Iowa Code section 125.13 or 2009 Iowa Code Supplement section 135.150 providing care, maintenance and

treatment for client/patients. Facility also includes the physical areas such as grounds, buildings, or portions thereof under direct administrative control of the program.

"Focused reviews" means a survey conducted during the licensing process to assess the degree to which a program has improved its level of compliance relating to specific recommendations. The subject matter of the review is typically in area(s) of identified deficiency in compliance; however, other performance areas may also be assessed by a surveyor(s), including areas not covered in deemed status.

"Follow-up" means the process for determining the status of an individual who has been referred to an outside resource for services or who has been discharged from services.

"Governing body" means the individual(s), group, or agency that has ultimate authority and responsibility for the overall operation of the facility.

"HIPAA" means the Health Insurance Portability and Accountability Act of 1996.

"Intake" means gathering additional assessment information at the time of admission to services.

"Intensive outpatient treatment (Level II.1)" means intensive outpatient programs (IOP) that provide a minimum of nine hours for adults or a minimum of six hours for adolescents of structured programming per week, consisting primarily of counseling and education. For problem gambling client/patients, the service may be offered in conjunction with transitional housing.

"Iowa board of certification" means the professional certification board that certifies substance abuse counselors and prevention specialists, problem gambling treatment specialists and other addiction treatment specialists in the state of Iowa.

"Levels of care" is a general term that encompasses the different options for treatment that vary according to the intensity of the services offered. Each treatment option in the ASAM-PPC-2R is a level of care.

"Licensee" means any program licensed by the department.

"Licensure" means the issuance of a license by the department and the committee which validates the licensee's compliance with treatment program standards and authorizes the licensee to operate a treatment program in the state of Iowa.

"Licensure weighting report" means the report that is used to determine the type of license a program qualifies for based on point values assigned to areas reviewed and total number of points attained. In addition, a minimum percent value in each of three categories shall be attained to qualify a program for a license as follows: 95 percent or better rating in clinical, administrative and programming for a three-year license; 90 percent or better rating in clinical, administrative and programming for a two-year license; or less than 90 percent but no less than 70 percent rating in clinical, administrative and programming for a one-year license. The determination of length of license for programs licensed through deemed status shall be made by the accreditation body.

"Maintenance" means the prolonged scheduled administration of methadone or other approved controlled substances intended as a substitute or antagonist to abused substances in accordance with federal and state regulations.

"Management of care" means the process to ensure the appropriate level of care is utilized by implementing ASAM-PPC-2R criteria during placement screening, continuing service and discharge. This process includes discharge planning that begins at admission to meet the immediate, ongoing and posttreatment needs of the client/patient.

"May" means a term used in the interpretation of a standard to reflect an acceptable method that is recognized but not necessarily preferred.

"Medically managed intensive inpatient treatment (Level IV)" is an organized ASAM-PPC-2R service staffed by designated addiction physicians or addiction credentialed clinicians. Level IV care involves a planned regimen of 24-hour medically directed evaluation, care and treatment of substance-related disorders in an acute-care inpatient setting. Such a service functions under a defined set of policies and procedures and has permanent facilities that include inpatient beds. Services involve daily medical care in which diagnostic and treatment services are directly provided by a licensed physician.

"Medically monitored intensive inpatient treatment (Level III.7)" is an organized ASAM-PPC-2R service delivered by an interdisciplinary staff to client/patients whose subacute biomedical and

emotional/behavioral problems are sufficiently severe to require inpatient care. Twenty-four-hour observation, monitoring and treatment are available. However, the full resources of an acute care general hospital or a medically managed inpatient treatment service system are not necessary. Services are provided by an interdisciplinary staff of nurses, counselors, social workers, addiction specialists and other health care professionals and technical personnel, under the direction of licensed physicians. Medical monitoring is provided through an appropriate mix of direct patient contact, review of records, team meetings, 24-hour coverage by a physician, and quality assurance programs.

"Outreach" means public speaking engagements and other similar activities and functions that inform the public of available programs and services offered by a treatment program. In addition, outreach is a process or series of activities that identifies individuals in need of services, engages them and links them with the most appropriate resource or service provider. Such activities may include, but are not limited to, the following: individual client/patient recruitment through street outreach and organized informational sessions at churches, community centers, recreational facilities, and community service agencies.

"OWI" means operating while intoxicated, in violation of Iowa Code chapter 321J.

"Partial hospitalization (day treatment) (Level II.5)" means a program which provides 20 or more hours of clinically intensive programming per week based on individual treatment plans. Programs have ready access to psychiatric, medical and laboratory services and thus are better able than Level II.1 programs to meet client/patient needs. Partial hospitalization/day treatment is a generic term encompassing day, night, evening and weekend treatment programs that employ an integrated, comprehensive and complementary schedule of recognized treatments.

"Physician" means any individual licensed under Iowa Code chapter 148, 150, or 150A.

"Prevention" means a proactive process to eliminate unnecessary disease, disability, and premature death caused by (1) acute disease, (2) chronic disease, (3) intentional or unintentional injury or disease associated with environmental, home and workplace hazards, and (4) controllable risk factors such as poor nutrition; lack of exercise; alcohol, tobacco, and other drug use; inadequate use of preventive health services; and other risk behaviors.

"Primary care modality" means a treatment component or modality including continuing care, halfway house, extended outpatient treatment, intensive outpatient treatment, primary extended residential treatment, medically monitored intensive inpatient treatment, and medically managed intensive inpatient treatment services.

"Primary scope of practice" means the area in which a counselor maintains a professional license or certification.

"Prime programming time" means any period of the day when special attention or supervision is necessary, for example, upon awakening in the morning until departure for school, during meals, after school, transition between activities, evenings and bedtime, or weekends and holidays, in order to maintain continuity of program and care. Prime programming time shall be defined by the facility.

"Problem gambling" means a pattern of gambling behavior which may compromise, disrupt or damage family, personal or vocational pursuits.

"Program" means any partnership, corporation, association, governmental subdivision or public or private organization.

"Protected classes" means classes of people who have required special legislation to ensure equality.

"Quality improvement" means the process of objectively and systematically monitoring and evaluating the quality and appropriateness of client/patient care to improve client/patient care and resolve identified problems.

"Readiness to change" is a category to be considered in the ASAM-PPC-2R criteria. This category evaluates the client/patient's current emotional and cognitive awareness of the need to change and level of commitment to change.

"Recovery/living environment" is a category to be considered in the ASAM-PPC-2R criteria. This category evaluates client/patient's current recovery/living environment as it impacts on level of care decision making and treatment planning. Recovery/living environment may include, but is not limited to, current relationships and degree of support for recovery, current housing, employment situation, and

availability of alternatives. Historical information on client/patient's recovery/living environment may also be considered.

"Recovery oriented system of care" means person-centered and self-directed approaches to care that build on the strengths and resilience of individuals, families and communities to take responsibility for their sustained health, wellness, and recovery from mental illness, alcohol and drug problems, and problem gambling. A recovery oriented system of care offers a comprehensive menu of services and supports that can be combined and readily adjusted to meet the individual's needs and chosen pathway to recovery.

"Rehabilitation" means the restoration of a client/patient to the fullest physical, mental, social, vocational, and economic usefulness of which the client/patient is capable. Rehabilitation may include, but is not limited to, medical treatment, psychological therapy, occupational training, job counseling, social and domestic rehabilitation and education.

"Relapse" means progressive irresponsible, inappropriate and dysfunctional behavior patterns that could lead to resumption of alcohol or drug use or problem gambling. "Relapse" also refers to the resumption of alcohol or drug use or problem gambling.

"Relapse, continued-use or continued-problem potential" is a category to be considered in the ASAM-PPC-2R criteria. This category evaluates client/patient's current factors that contribute to relapse potential as it impacts on level of care decision making and treatment planning. Relapse potential may include, but is not limited to, current statements by client/patient about relapse potential, reports from others on potential for client/patient's relapse, and assessment by clinical staff. Historical information on client/patient's relapse potential may also be considered. This category may include the client/patient's understanding of skills in coping with addictive or mental disorders, recognition of relapse triggers, skills to control impulses and ways to cope with relapse potential.

"Residential program" means a 24-hour, live-in, seven-day-a-week treatment program facility offering intensive rehabilitation services to individuals who are considered unable to live or work in the community due to social, emotional, or physical disabilities resulting from substance abuse or problem gambling. The ASAM-PPC-2R levels of care may include III.1, III.3, III.5 or III.7.

"Rule" means each statement of general applicability that implements, interprets, or prescribes division law or policy, or that describes the organization procedure or practice requirements of the division. The term includes the amendment or repeal of existing rules as specified in the Iowa Code.

"Screening" means the process by which a client/patient is determined appropriate and eligible for admission to a particular program or level of care. The focus is on the minimum criteria necessary for appropriateness/eligibility.

"Self-administration of medication" means the process where a properly trained staff member observes a client/patient inject, inhale, ingest, or by any other means take, medication which has been prescribed by a licensed physician.

"Shall" means the term used to indicate a mandatory statement, the only acceptable method under the present standards.

"Should" means the term used in the interpretation of a standard to reflect the commonly accepted method, yet allowing for the use of effective alternatives.

"Sole practitioner" means an individual incorporated under the laws of the state of Iowa, or an individual in private practice who is providing substance abuse treatment services independent from a program that is required to be licensed in accordance with Iowa Code section 125.13(1).

"Specialized certification" means a substance abuse- or problem gambling-related credential acceptable to the department for providing treatment according to these rules.

"Staff" means any individual who provides services to the treatment program on a regular basis as a paid employee, agent or consultant or as a volunteer.

"Standards" means specifications representing the minimal characteristics of a treatment program which are acceptable for the issuance of a license.

"Subspecialty" means a secondary scope of practice, either substance abuse treatment or problem gambling treatment, approved in accordance with these rules. To maintain expertise within the

subspecialty, the counselor shall complete a minimum of an additional 20 hours of training within the subspecialty every two years.

"Substance abuser" means a person who habitually lacks self-control as to the use of chemical substances or uses chemical substances to the extent that the person's health is substantially impaired or endangered or that the person's social or economic function is substantially disrupted.

"Time frames" means the period of time within which the assessment and treatment plan must be completed after admission, frequency of review of the treatment plan by the client/patient and counselor, and frequency of reviews for continuing service and discharge. The time frames for Levels I and III.1 shall be every 30 days; for Levels II.1, II.5, III.3 and III.5, every 7 days; and for Levels III.7 and IV, daily. For Level I continuing care/aftercare, there shall not be any required frequency of review for continuing service or frequency of review of treatment plan by client/patient and counselor.

"Transitional housing" means housing that may be offered to individuals who are problem gamblers and who have no other housing alternatives or whose housing alternatives are not conducive to problem gambling recovery. Problem gamblers receiving transitional housing must also be receiving problem gambling treatment services.

"Treatment" means the broad range of planned and continuing inpatient, outpatient, and residential care services, including diagnostic evaluation, counseling, and medical, psychiatric, psychological, and social service care, which may be extended to substance abusers, problem gamblers, concerned persons, concerned family members, or significant others. Treatment is geared toward influencing the behavior of such individuals to achieve a state of rehabilitation.

"Treatment days" means days in which the treatment program is open for services or actual working days.

"Treatment planning" means the process by which a counselor and client/patient identify and rank problems, establish agreed-upon goals, and decide on the treatment process and resources to be utilized.

"Treatment program" means a program licensed under these rules. A treatment program may be a substance abuse treatment program, a problem gambling treatment program, or a substance abuse and problem gambling treatment program.

"Treatment supervisor" means an individual who, by virtue of education, training or experience, is capable of assessing the psychosocial history of a client/patient to determine the treatment plan most appropriate for the client/patient. This person shall be designated by the treatment program.

[**ARC 8792B**, IAB 6/2/10, effective 7/1/10; **ARC 9534B**, IAB 6/1/11, effective 7/6/11]

641—155.2(125,135) Licensing. A single license will be issued to each qualifying treatment program. A program shall apply for a license to provide substance abuse treatment, problem gambling treatment, or combined substance abuse and problem gambling treatment.

155.2(1) *Categories of services.* The license will delineate one or more categories of services the program is authorized to provide. Although a program may have more than one facility, only one license will be issued to the program. The categories of services for which licenses will be issued are:

a. Narcotic detoxification/chemical substitute, antagonist maintenance chemotherapy;

b. Assessment and evaluation;

c. OWI correctional residential;

d. OWI correctional outpatient;

e. Correctional residential treatment;

f. Correctional outpatient treatment;

g. Medically managed intensive inpatient services: Level IV;

h. Residential/inpatient services: Levels III.1, III.3, III.5 and III.7;

i. Intensive outpatient/partial hospitalization services: Levels II.1 and II.5; and

j. Outpatient extended and continuing care services: Level I.

155.2(2) *Licensing body.* The committee shall:

a. Consider and approve or disapprove all applications for a license and all cases involving the renewal, denial, suspension, or revocation of a license;

b. Advise the department on policies governing the performance of the department in the discharge of any duties imposed on the department by law;

c. Advise or make recommendations to the board relative to substance abuse and gambling treatment, intervention, education, and prevention programs in this state; and

d. Perform other duties as assigned by the board.

[**ARC 8792B**, IAB 6/2/10, effective 7/1/10; **ARC 9534B**, IAB 6/1/11, effective 7/6/11]

641—155.3(125,135) Type of licenses.

155.3(1) *Issuance of licenses.*

a. Licenses may be issued for up to three years. A license may be renewed for one, two, or three years. An initial license may be issued for 270 days. A license issued for 270 days shall not be renewed or extended.

b. Licenses shall expire one or two calendar years from the date of issue, and a renewal of the license shall be issued only on application.

c. The renewal of a one-year or two-year license shall be contingent upon demonstration of continued compliance with licensure standards and in accordance with the licensure weighting report criteria.

d. The renewal of a three-year license shall be contingent upon demonstration of substantial continued compliance with licensure standards and in accordance with the licensure weighting report criteria or continuation in deemed status.

e. Failure to apply for renewal of the license within 30 days after the expiration date shall result in immediate termination of license and require reapplication.

155.3(2) *Corrective action.* Following the issuance of a license, the treatment program may be requested by the committee to provide a written plan of corrective action and to bring into compliance all areas found in noncompliance during the on-site visit. The corrective action plan shall be placed in the program's permanent file with the division and used as reference during future on-site inspections.

[**ARC 8792B**, IAB 6/2/10, effective 7/1/10; **ARC 9534B**, IAB 6/1/11, effective 7/6/11]

641—155.4(125,135) Nonassignability; program closure.

155.4(1) A license issued by the department for the operation of a treatment program applies both to the applicant program and the premises upon which the program is to be operated. Licenses are not transferable.

155.4(2) A discontinued program is one which has terminated the services for which it has been licensed. When a program is discontinued, its current license is void immediately and shall be returned to the department.

155.4(3) Any person or other legal entity acquiring a licensed facility for the purpose of operating a treatment program shall apply for a new license.

155.4(4) Any person or legal entity having acquired a license and desiring to fundamentally alter the treatment philosophy or transfer to a different premises must notify the committee 30 days prior to said action in order for the department to review the site change and to determine appropriate action.

155.4(5) A licensee shall, if possible, notify the department of impending closure of the licensed program at least 30 days prior to such closure. The licensee shall be responsible for the removal and placement of client/patients and for the preservation of all records. Upon closing all facilities and terminating all service delivery activities, the licensee shall immediately return the license to the department.

[**ARC 8792B**, IAB 6/2/10, effective 7/1/10; **ARC 9534B**, IAB 6/1/11, effective 7/6/11]

641—155.5(125,135) Application procedures. The department shall provide an application to all applicants for licensure. An on-site visit for licensure of an initial applicant shall occur before the program opens and admits client/patients for services. For initial applicants, if technical assistance has been provided, the on-site visit may be waived at the discretion of the department. The division shall prepare a report with a recommendation for licensure to be presented at a committee meeting within 60 days from the site visit. Public notice for committee meetings will be made in accordance

with Iowa Code section 21.4. The division shall provide notice to the program ten days prior to the committee meeting notifying the program director and program board chairperson of the time, place, and date the committee will review and act upon the application for the program along with the results of the inspection. The division shall provide to all committee members reports of the on-site program licensure inspection and a final recommendation for each application to be acted upon at the next committee meeting.

155.5(1) *Application information for comprehensive programs.* An applicant for licensure shall submit the following information on forms available at the Iowa Department of Public Health, Division of Behavioral Health, Lucas State Office Building, 321 East 12th Street, Des Moines, Iowa 50319-0075.

a. The name and address of the applicant treatment program.

b. The name and address of the executive director of such treatment program.

c. The names, titles, dates of employment, education, and years of current job-related experience of staff and a copy of the table of organization. Where multiple components and facilities exist, the relationship between components and facilities must be shown, as well as a description of the screening and training process for volunteer workers.

d. The names and addresses of members of the governing body, sponsors, or advisory boards of such treatment program and current articles of incorporation and bylaws.

e. The names and addresses of all physicians, other professionally trained personnel, medical facilities, and other individuals or organizations with whom the treatment program has a direct contractual or affiliation agreement.

f. A description of the treatment services provided by the treatment program and a description of weekly activities for each treatment modality or component.

g. Copies of reports substantiating compliance with federal, state and local rules and laws for each facility, to include appropriate Iowa department of inspections and appeals rules, state fire marshal's rules and fire ordinances, appropriate local health, fire, occupancy code, and safety regulations.

h. Information required under Iowa Code section 125.14A.

i. Fiscal management information to include a recent audit or opinion of auditor and program board minutes to reflect approval of budget and insurance program.

j. Insurance coverage related to professional and general liability; building; workers' compensation; and fidelity bond.

k. The address and facility code of each office, facility, or program location.

l. The program's current written policies and procedures manual to include the staff development and training program, and personnel policies. Applications for licensure will not be considered complete until a complete policies and procedures manual has been submitted to the division.

m. The application information for an initial application for licensure shall be complete and shall be reviewed by the department prior to a scheduled on-site inspection.

155.5(2) *Application information for substance abuse assessment and evaluation programs.* An applicant for licensure shall submit the following information on forms available at the Iowa Department of Public Health, Division of Behavioral Health, Lucas State Office Building, 321 East 12th Street, Des Moines, Iowa 50319-0075.

a. The name and address of the applicant substance abuse assessment and evaluation program.

b. The name and address of the executive director or sole practitioner of such substance abuse program.

c. The names, titles, dates of employment, education, and years of current job-related experience of staff and a copy of the table of organization (if applicable). If multiple components and facilities exist, the relationship between components and facilities must be shown, as well as a description of services.

d. The names and addresses of members of the governing body, sponsors, or advisory boards of such substance abuse assessment and evaluation program and current articles of incorporation and bylaws. (This requirement does not apply to a sole practitioner.)

e. The name(s) and address(es) of person(s) entered into the affiliation agreement for clinical oversight.

f. A description of the assessment and evaluation services.

g. Copies of reports substantiating compliance with federal, state and local rules and laws for each facility, to include appropriate state fire marshal's rules and fire ordinances, occupancy code, and safety regulations.

h. Information required under Iowa Code section 125.14A.

i. Insurance coverage related to professional and general liability; building; workers' compensation; and fidelity bond.

j. The address and facility code of each office, facility, or program location.

k. The program's current written policies and procedures manual which shall include the staff development and training program, and personnel policies. Applications for licensure will not be considered complete until a complete policies and procedures manual has been submitted to the division.

The application information for an initial application for licensure shall be complete and shall be reviewed by the department prior to a scheduled on-site inspection.

155.5(3) *Renewal.* An application for renewal shall be submitted on forms provided by the department at least 60 calendar days before expiration of the current license. An application for licensure renewal will not be considered complete until a current policies and procedures manual has been submitted to the department by the applicant treatment program.

155.5(4) *Application update or revision.* The department shall be notified, and a request of an application for licensure for update or revision shall be made, by an existing licensed program 30 days prior to any change(s) of address of offices, facilities, or program locations; or additions or deletions of the type(s) of services or programs provided and licensed. A new licensure application form shall be completed to reflect change of address of offices, facilities, or program locations, or additions or deletions of the type(s) of services or program(s) provided or licensed and shall be returned to the division within 10 working days from the date the forms are received. When applicable, as determined by the department, an on-site licensure inspection of a new component, service, program or facility may be conducted by the department within six months, upon receipt of the updated or revised application or during an existing licensed program's scheduled relicensure on-site inspection, whichever occurs first.

[**ARC 8792B**, IAB 6/2/10, effective 7/1/10; **ARC 9534B**, IAB 6/1/11, effective 7/6/11]

641—155.6(125,135) Application review. An applicant for licensure shall submit a completed application to the department within 30 days from the date the forms are received. The department shall review the application for completion and request any additional material as needed.

Applicants failing to return the forms shall be notified by registered mail that all programs must be licensed.

[**ARC 8792B**, IAB 6/2/10, effective 7/1/10]

641—155.7(125,135) Inspection of licensees. The department shall inspect the facilities and review the policies and procedures utilized by each program. The examination and review may include case record audits and interviews with staff and clients, consistent with the confidentiality safeguards of state and federal laws.

155.7(1) *Technical assistance.* A program applying for an initial license to operate a treatment program in the state of Iowa will be visited by the department for the purpose of providing needed technical assistance regarding the licensure criteria and procedures. The program may waive technical assistance in order to expedite the licensing process. Requests shall be submitted in writing to the division.

a. Following the issuance of a license, the treatment program may request technical assistance from the department so as to bring into conformity areas reported to be in noncompliance to these rules. Such technical assistance shall be scheduled within 30 days of the applicant's request depending on the availability of staff. The department may also request that technical assistance be provided to the program if deficiencies are noted during a site visit.

b. Reserved.

155.7(2) *On-site visit for licensure.* A licensure on-site inspection shall be scheduled after the department's receipt of the program's application to operate a treatment program. The department shall not be required to provide advance notice to the program of the on-site visit for licensure.

a. The on-site visit team will consist of designated members of the division staff, as approved by the director.

b. The team will inspect the program in order to verify information contained in the application and ensure compliance with all laws, rules and regulations.

c. The inspection team shall send a written report, return receipt requested, of their findings to the applicant within 20 working days after the completion of the inspection.

155.7(3) *Effective date of license.* The effective date of a license shall begin on the date the committee reviews the program's written report/application and acts to issue a license.

[**ARC 8792B**, IAB 6/2/10, effective 7/1/10; **ARC 9534B**, IAB 6/1/11, effective 7/6/11]

641—155.8(125,135) Licenses—renewal. Upon approval of an application for licensing by the committee, a license shall be issued by the department. Licenses shall be renewed pursuant to rule 641—155.5(125,135).

155.8(1) *Committee meeting preparation.* The division shall prepare a report with a final recommendation for licensing to be presented at a committee meeting within 80 days from the site visit. Public notice of committee meetings shall be made in accordance with Iowa Code section 21.4.

a. The division shall send notice to the program by certified mail, return receipt requested, ten days prior to the committee meeting notifying the program director and program board chairperson of the time, place, and date the committee will review and act upon the application for the program along with the results of the inspection.

b. The division shall mail to all committee members the following information on each application to be processed at the next committee meeting:

(1) Reports of the on-site program licensure inspections; and

(2) A final recommendation for licensing.

155.8(2) *Committee meeting format.*

a. The chairperson or designee shall call the meeting to order at the designated time.

b. The presiding officer will read each application and protocols.

c. Opportunity shall be given all concerned parties to respond, present evidence, and arguments on each application.

d. After all concerned parties are heard, the committee will make a decision as to whether the applicant should be finally approved or initially denied a license to operate a substance abuse treatment program.

[**ARC 8792B**, IAB 6/2/10, effective 7/1/10; **ARC 9534B**, IAB 6/1/11, effective 7/6/11]

641—155.9(125,135) Corrective action plan. Programs approved for a license for 270 days by the committee shall submit a corrective action plan to the director no later than 30 days following the committee meeting. The corrective action plan shall include, but not be limited to:

1. Specific problem areas.
2. A delineation of corrective measures to be taken by the program.
3. A delineation of target dates for completion of corrective measures for each problem area.
4. A follow-up on-site visit will be required to review the implemented corrective action with a subsequent report to the committee.

Programs issued a license for a period of one or two years shall submit a corrective action plan for those standards found to be in noncompliance following a licensure inspection. Technical assistance on a corrective action plan shall not be required for one- or two-year licenses. The corrective action plan shall be submitted within 30 days of receipt of the licensure inspection report.

[**ARC 8792B**, IAB 6/2/10, effective 7/1/10; **ARC 9534B**, IAB 6/1/11, effective 7/6/11]

641—155.10(125,135) Grounds for denial of initial license.

155.10(1) *Denial of application for licensure.* All programs applying for an initial license shall submit complete application information and shall be inspected by the department prior to the program's opening and offering services. A recommendation by the department of a denial of an initial application for licensure to the committee may be made based on the following reasons:

a. The application for licensure is incomplete or does not have the information required by 641—155.5(125).

b. On-site inspection report results based on the licensure weighting report indicate a score below minimum required for a recommendation of a 270-day license. A program applying for a 270-day license shall have a minimum score of 70 percent in each of the following standards: clinical, administrative and programming.

c. Violation of any of the grounds for discipline pursuant to 641—155.11(125,135).

155.10(2) *On-site visit for licensure.* The on-site visit for licensure of an initial applicant shall occur prior to the program opening and admitting client/patients. The department shall not be required to provide advance notice to the program of the on-site visit for licensure.

a. The on-site visit team will consist of designated members of the division staff, as approved by the director.

b. The team will inspect the program that has applied for a license in order to verify information contained in the application, ensure compliance with all laws, rules and regulations.

c. The inspection team shall send a written report, return receipt requested, of their findings to the applicant within 20 working days after the completion of the inspection.

d. The application information for an initial application for licensure shall be complete and shall be reviewed by the department prior to a scheduled on-site inspection.

155.10(3) *Committee action.* The committee shall meet to consider all cases involving issuance of a license. Upon approval of an application for licensure by the committee, a license shall be issued by the department.

a. Committee hearing preparation. The division will prepare all documents with a final recommendation for licensing determination to be presented at a committee meeting within 120 days from the site visit. The division shall provide public notice of the date, time, and place of the meeting and the names of applicants to be reviewed and processed.

(1) The division shall provide notice to the program 30 days prior to the committee meeting notifying the program director and program board chairperson of the time, place, and date the committee will review and act upon the application for the program along with the results of the inspection.

(2) The division shall provide to all committee members the following information on each application to be processed at the next committee meeting: reports of the on-site program licensure inspections, and a final recommendation for licensing.

b. Committee meeting format.

(1) The chairperson or designee shall call the meeting to order at the designated time.

(2) The presiding officer or designee shall give summary of each application and protocols.

(3) Opportunity shall be given all concerned parties to respond and present evidence and arguments on each application.

(4) After all concerned parties are heard, the committee will make a decision as to whether the applicant should be finally approved or initially denied a license to operate a substance abuse treatment program.

[**ARC 8792B**, IAB 6/2/10, effective 7/1/10; **ARC 9534B**, IAB 6/1/11, effective 7/6/11]

641—155.11(125,135) Suspension, revocation, or refusal to renew a license.

155.11(1) The committee may suspend or revoke a license or refuse to renew a license for any of the following reasons:

a. Failure to adequately complete the application or renewal application process or submission of fraudulent or misleading information in the application or renewal process.

b. Failure to obtain the minimum score required for a one-, two- or three-year license.

c. Violation by a program, program employee or agent of any statute or rule pertaining to treatment programs, including a violation of any provision of this chapter.

d. Failure to comply with licensure, inspection, health, fire, occupancy, safety, sanitation, zoning, or building code or regulations required by federal, state, or local law.

e. Receiving a report from an accreditation body sanctioning, modifying, terminating, or withdrawing the accreditation of the program.

f. Suspension, revocation, refused renewal, or refused issuance of a federal registration to distribute or dispense methadone or other controlled substances.

g. Committing or permitting or aiding or abetting the commission of an unlawful act within a facility.

h. Conviction of a member of the governing body, a director, administrator, chief executive officer, or other managing staff member, of a felony or misdemeanor involving the management or operation of the facility or which is directly related to the operation or integrity of the facility.

i. Use of untruthful or improbable statements in advertising.

j. Conduct or practices found by the committee to be detrimental to the general health, safety, or welfare of a client/patient or member of the general community.

k. Violating a client/patient's confidentiality or willful, substantial, or repeated violations of a client/patient's rights.

l. Defrauding a client/patient, potential client/patient, or third-party payor.

m. Inappropriate conduct by program staff, including sexual or other harassment or exploitation of a program client/patient, volunteer, trainee or employee.

n. Utilization of treatment techniques which endanger the health, safety, or welfare of a client/patient.

o. Discrimination or retaliation against a client/patient or employee who has submitted a complaint or information to the department.

p. Failure to allow an employee or agent of the department access to the facility for the purpose of inspection, investigation, or other information collection duties necessary to the performance of the department's duties.

q. Failure to submit an acceptable written plan of corrective action or failure to comply with a written plan of corrective action issued pursuant to 155.3(2), 641—155.9(125,135), or 155.16(4)*"e."*

r. Violating an order of the committee or violating the terms or conditions of a consent agreement or informal settlement between a program and the committee.

155.11(2) Initial notice from committee. When the committee determines to deny a renewal, suspend or revoke a license, the committee shall notify the licensee by certified mail, return receipt requested, of the committee's intent to suspend, revoke, or refuse to renew the license and the changes that must be made in the licensee's operation to avoid such action. The initial notice shall further provide the licensee the opportunity to submit either a written plan of corrections or written objections to the department within 20 days from the receipt of notice from the committee.

155.11(3) Correction of issues or objections.

a. *Written plan of corrections.* If a licensee submits a written plan of corrections, the licensee shall have 60 days from the date of submission within which to show compliance with the plan of corrections. The licensee shall submit any information to the committee that the licensee deems pertinent to show compliance with the plan of corrections.

b. *Objections.* If a licensee submits written objections, the licensee shall submit to the committee any information that the licensee deems pertinent which supports the licensee's defense.

155.11(4) Decision of committee. Following receipt of a written plan of corrections and expiration of the 60-day time period, or following receipt of written objections, or when objections or notice of corrections have not been received within the 20-day time period, the committee may meet to determine whether to proceed with the disciplinary action. The licensee shall receive notice of this meeting in the same manner as provided by 155.8(1)*"a."*

155.11(5) Notice of decision and opportunity for contested case hearing.

a. When the committee determines to suspend, revoke or not renew a license, the licensee shall be given written notice by restricted certified mail.

b. The licensee may request a hearing on the determination. The request must be in writing and mailed to the department address within 30 days of the notice issued by the committee. The request shall

be sent by certified mail, return receipt requested. Failure to request a hearing will result in final action by the committee.

155.11(6) Summary suspension. If the committee finds that the health, safety or welfare of the public is endangered by continued operation of a treatment program, summary suspension of a license may be ordered pending proceedings for revocation or other actions. These proceedings shall be promptly instituted and determined.

[**ARC 8792B**, IAB 6/2/10, effective 7/1/10; **ARC 9534B**, IAB 6/1/11, effective 7/6/11]

641—155.12(125,135) Contested case hearing. Programs that wish to contest the denial, suspension, revocation or refusal to renew their license shall be afforded an opportunity for a hearing before an administrative law judge from the Department of Inspections and Appeals. The program will be notified in writing, return receipt requested, of the date of the hearing, no less than 30 days before the hearing.

155.12(1) *Failure to appear.* If a party fails to appear in a contested case hearing proceeding after proper service of notice, the administrative law judge shall, in such a case, enter a default judgment against the party failing to appear.

155.12(2) *Conduct of hearing.* Opportunity shall be afforded all parties to respond and present evidence and argument on all issues involved and to be represented by counsel at their own expense.

a. The hearing shall be informal and all relevant evidence admissible. Effect will be given to the rules of privilege recognized by law. Objections to evidentiary offers may be made and shall be noted in the record. When the hearing will be expedited and the interests of the parties will not be prejudiced substantially, any part of the evidence may be required to be submitted in verified written form.

b. Documentary evidence may be received in the form of copies or excerpts if the original is not readily available. Upon request, parties shall be given an opportunity to compare the copy with the original, if available.

c. Witnesses present at the hearing shall be subject to cross-examination by any party as necessary for a full and true disclosure of the facts.

d. The record in a contested case shall include:

(1) All pleadings, motions and intermediate rulings.

(2) All evidence received or considered and all other submissions.

(3) A statement of all matters officially noticed.

(4) All questions and offers of proof, objections and rulings therein.

(5) All proposed findings and exceptions.

(6) Any decision, opinion or report by the officer presiding at the hearing.

e. Oral proceedings shall be open to the public and shall be recorded either by mechanized means or by certified shorthand reporters. Oral proceedings or any part thereof shall be transcribed at the request of any party with the expense of the transcription charged to the requesting party. The recording or stenographic notes of oral proceedings or the transcription thereof shall be filed with and maintained by the agency for at least five years from the date of decision.

f. Findings of fact shall be based solely on the evidence in the record and on matters officially noticed in the record.

155.12(3) *Continuance.* For good cause, the administrative law judge may continue hearings beyond the time originally scheduled or recessed. Requests for continuance shall be made to the administrative law judge in writing at least three days prior to the scheduled hearing date. Continuances will not be granted less than three days before the hearing except for exigent circumstances.

155.12(4) *Decision.* Findings of fact shall be based solely on the evidence in the record and upon matters officially noticed in the record.

a. The decision of the administrative law judge shall be the final decision unless there is an appeal to the board within 20 days of the receipt of the decision.

b. A proposed or final decision or order in a contested case hearing shall be in writing. A proposed or final decision shall include findings of fact and conclusions of law, separately stated. Parties will be promptly notified of each proposed or final decision or order by the delivery to them of a copy of such

decision or order by certified mail, return receipt requested. In the case of a proposed decision, parties shall be notified of the right to appeal the decision to the board.

155.12(5) *Appeal to the board.*

a. Either party may request the board review the proposed decision. The request shall be in writing and mailed within 20 days of receipt of the proposed decision.

b. The parties shall have an opportunity to submit briefs to the board. The board will review the record and any briefs. No new evidence shall be admitted unless requested and allowed by the board.

c. Oral presentation will be made to the board at a time set by the board.

d. The board shall issue its decision in writing within 30 days after conclusion of the hearing.

[**ARC 8792B**, IAB 6/2/10, effective 7/1/10]

641—155.13(125,135) Rehearing application. Any party may file an application for rehearing, stating the specific grounds therefor and the relief sought, within 20 days after the issuance of any final decision by the board in a contested case. A copy of such application shall be timely mailed by the applicant to all parties of record not joining therein. Such an application for rehearing shall be deemed to have been denied unless the board grants the application within 20 days after its filing.

[**ARC 8792B**, IAB 6/2/10, effective 7/1/10]

641—155.14(125,135) Judicial review. A licensee who is aggrieved or adversely affected by the board's final decision and who has exhausted all adequate administrative remedies may seek judicial review of the board's decision pursuant to and in accordance with Iowa Code section 17A.19.

[**ARC 8792B**, IAB 6/2/10, effective 7/1/10]

641—155.15(125,135) Reissuance or reinstatement. After suspension, revocation or refusal to renew a license, the affected licensee shall not have the license reissued or reinstated within one year of the effective date of the suspension, revocation or expiration upon refusal to renew, unless by order of the committee. After that time, proof of compliance with the licensure standards must be presented to the committee prior to reinstatement or reissuance of a license.

[**ARC 8792B**, IAB 6/2/10, effective 7/1/10; **ARC 9534B**, IAB 6/1/11, effective 7/6/11]

641—155.16(125,135) Complaints and investigations.

155.16(1) *Complaints.* Any person may file a complaint with the department against any program licensed pursuant to this chapter. The complaint shall be made in writing and shall be mailed or delivered to the division director at the Division of Behavioral Health, Lucas State Office Building, 321 East 12th Street, Des Moines, Iowa 50319-0075. A complaint form may be downloaded on-line at: http://www.idph.state.ia.us/bh/common/pdf/substance_abuse/complaint_form.pdf. The complaint shall include the name and address of the complainant, the name of the program, and a concise statement of the allegations against the program, including the specific alleged violations of Iowa Code chapter 125 or this chapter, if known. A complaint may also be initiated upon the committee's own motion pursuant to evidence received by the department. Timely filing of complaints is required in order to ensure the availability of witnesses and to avoid initiation of an investigation under conditions which may have been significantly altered during the period of delay.

155.16(2) *Evaluation and investigation.* Upon receipt of a complaint, the department shall make a preliminary review of the allegations contained in the complaint. Unless the department concludes that the complaint is intended solely to harass a program or lacks a reasonable basis, it shall conduct an on-site investigation of the program which is the subject of the complaint as soon as is practicable. The program which is the subject of the complaint shall be given an opportunity to informally respond to the allegations contained in the complaint either in writing or through a personal interview or conference.

155.16(3) *Investigative report.* Within 30 working days after completion of the investigation, the department shall prepare a written investigative report and shall submit the report to the executive director of the program, the chairperson of the governing body, and the committee. This report shall include the nature of the complaint and shall indicate if the complaint allegations were substantiated, unsubstantiated,

or undetermined, the basis for the finding, the specific statutes or rules at issue, a response from the program, if received, and a recommendation for action.

155.16(4) *Review of investigations.* The committee shall review the investigative report at its next regularly scheduled meeting and shall determine appropriate action.

a. *Closure.* If the committee determines that the allegations contained in the complaint are unsubstantiated, the committee shall close the case and shall promptly notify the complainant and the program by letter.

b. *Referral for further investigation.* If the committee determines that the case warrants further investigation, it shall refer the case to the department for further investigation.

c. *Written plan of corrective action.* If the committee determines that the allegations contained in the complaint are substantiated and corrective action is warranted, the committee may require the program to submit and comply with a written plan of corrective action. A program shall submit a written plan of corrective action to the department within 20 working days after receiving a request for such plan. The written plan of corrective action shall include a plan for correcting violations as required by the committee and a time frame within which such plan shall be implemented. The plan is subject to department approval. Requiring a written plan of corrective action is not formal disciplinary action. Failure to submit or comply with a written plan of corrective action may result in formal disciplinary action against the program.

d. *Disciplinary action.* If the committee determines that the allegations contained in the complaint are substantiated and disciplinary action is warranted, the committee may proceed with such action in accordance with rule 641—155.11(125).

155.16(5) *Confidential information and public information.* Information contained in a complaint may be confidential pursuant to Iowa Code section 22.7(2), 22.7(18), or 125.37 or any other provision of state or federal law. Investigative reports, written plans of corrective action, and all notices and orders issued pursuant to rule 641—155.11(125,135) shall refer to client/patients by number and shall not include any other client/patient identifying information. Investigative reports, written plans of corrective action, and all notices and orders issued pursuant to rule 641—155.11(125,135) shall be available to the public as open records pursuant to Iowa Code chapter 22.

[**ARC 8792B**, IAB 6/2/10, effective 7/1/10; **ARC 9534B**, IAB 6/1/11, effective 7/6/11]

641—155.17 Reserved.

641—155.18(125,135) Deemed status. The committee shall grant deemed status to programs accredited either by a recognized national or not-for-profit accreditation body when the committee determines that the accreditation is for the same services. Problem gambling treatment components shall not be granted deemed status under this rule, unless specifically reviewed by the accreditation body.

155.18(1) National accreditation bodies. The national accreditation bodies currently recognized as meeting committee criteria for possible deemed status are:

a. Joint Commission.

b. Council on Accreditation of Rehabilitation Facilities (CARF).

c. Council on Accreditation of Children and Family Services (COA).

d. American Osteopathic Association (AOA).

155.18(2) Credentials and expectations of accreditation bodies.

a. The accreditation credentials of the bodies shall specify the types of organizations, programs and services the bodies accredit and targeted population groups, if appropriate.

b. Deemed status means that the committee and division shall recognize, in lieu of their own review, an outside body's review, assessment, and accreditation of a hospital-based or freestanding community-based treatment program's operations, functioning, and services that correspond to those described in this chapter.

155.18(3) Responsibilities of programs granted deemed status.

a. When a program receives accreditation and is then granted licensure through deemed status, the program shall continue to be responsible for meeting all requirements in accordance with this chapter and all applicable laws and regulations.

b. If a program that is nationally accredited requests deemed status for services not covered by the national accreditation body's standards, but covered by this chapter, the licensing for those services shall be conducted by the division.

c. Copies of the entire CARF, Joint Commission, COA, or AOA behavioral health accreditation survey/inspection report and certificate of accreditation shall be submitted to the division with the application for deemed status provided by the division.

d. A program shall submit to the division accreditation corrective plans or written conditions to accreditation.

e. A program shall be currently accredited by a committee-approved national accreditation body for services that are outlined in this chapter.

f. A program shall advise the division of any changes in the program's accreditation status, address, executive director/CEO, facility locations, or any other changes to the program/organization within 30 days of such change.

g. All survey reports for the hospital-based or freestanding community-based treatment program from the accrediting or licensing body shall be sent to the division.

h. For a program granted deemed status, the period of deemed status shall coincide with the period of time that program is awarded accreditation by the national accreditation body. However, under no circumstances shall it be longer than three years.

155.18(4) The committee and division shall retain the following responsibilities and rights when deemed status is granted to program/organizations:

a. The division may conduct site follow-up visits as determined appropriate.

b. The division shall investigate all complaints that are under the authority of this chapter and recommend and require corrective action or other sanctions in accordance with 641—155.16(125,135). All complaints, findings, and required corrective action may be reported to the accreditation body.

c. The committee shall review and act upon deemed status if necessary when complaints have been founded, when national accreditation bodies find instances of noncompliance with accreditation, when the accreditation status of the program expires without renewal, when the program's accreditation status is downgraded or withdrawn by the accreditation body, or when focused reviews find instances of noncompliance.

155.18(5) *Continuation of deemed status.* The program shall submit a copy of all CARF, Joint Commission, COA, or AOA behavioral health accreditation survey reports to the division. Applications for continuation of deemed status shall be submitted pursuant to 155.5(3).

[**ARC 8792B**, IAB 6/2/10, effective 7/1/10; **ARC 9534B**, IAB 6/1/11, effective 7/6/11]

641—155.19(125,135) Funding. The issuance of the license to any program shall not be construed as a commitment on the part of either the state or federal government to provide funds to such licensed program.

[**ARC 8792B**, IAB 6/2/10, effective 7/1/10]

641—155.20(125,135) Inspection. Each applicant or licensee agrees as a condition of licensure:

155.20(1) To permit properly designated representatives of the department to enter into and inspect any and all premises of programs for which a license has been either applied or issued to verify information contained in the application or to ensure compliance with all laws, rules, and regulations relating thereto, during all hours of operation of said facility and at any other reasonable hour.

155.20(2) To permit properly designated representatives of the department to audit and collect statistical data from all records maintained by the licensee. A facility shall not be licensed which does not permit inspection by the department or examination of all records, including financial records, methods of administration, general and special dietary programs, the disbursement of drugs and methods of supply, and any other records the committee deems relevant to the establishment of such a system.

[**ARC 8792B**, IAB 6/2/10, effective 7/1/10; **ARC 9534B**, IAB 6/1/11, effective 7/6/11]

641—155.21(125,135) General standards for all treatment programs. The following standards shall apply to all treatment programs in the state of Iowa regardless of the category of treatment services provided by such programs. In situations where differences between general standards for all treatment programs and specific standards occur, both general and specific standards must be met.

155.21(1) *Governing body.* Each program shall have a formally designated governing body that is representative of the community being served, complies with Iowa Code chapter 504, and is the ultimate authority for the overall program operations. Persons in private practice as sole practitioners shall be exempt from this subrule except for requirements to have malpractice and liability insurance.

a. The governing body shall develop and adopt written bylaws and policies that define the powers and duties of the governing body, its committees, advisory groups, and the executive director. These bylaws shall be reviewed and revised by the governing body as necessary.

b. The bylaws shall minimally specify the following:

(1) The type of membership;

(2) The term of appointment;

(3) The frequency of meetings;

(4) The attendance requirements; and

(5) The quorum necessary to transact business.

c. Minutes of all meetings shall be kept and be available for review by the department and shall include, but not necessarily be limited to:

(1) Date of the meeting;

(2) Names of members attending;

(3) Topics discussed; and

(4) Decisions reached and actions taken.

d. The duties of the governing body shall include, but not necessarily be limited to, the following:

(1) Appointment of a qualified executive director who shall have the responsibility and authority for the management of the program in accordance with the governing body's established policies;

(2) Establish an effective control which will ensure that quality services are delivered;

(3) Review and approve the program's annual budget; and

(4) Approve all contracts.

e. The governing body shall develop and approve policies for the effective operation of the program.

f. The governing body shall be responsible for all funds, equipment, supplies and the facility in which the program operates. The governing body shall be responsible for the appropriateness and adequacy of services provided by the program.

g. The governing body shall at least annually prepare a report which will include, but not necessarily be limited to, the following items:

(1) The name, address, occupation, and place of employment of each governing body member;

(2) Any family relationships which a member of the governing body may have to a program staff member; and

(3) Where applicable, the name and address of all owners or controlling parties whether they are individuals, partnerships, corporation body, or subdivision of other bodies, such as a public agency, or religious group, fraternity, or other philanthropic organization.

h. The governing body shall assume responsibility in seeing that the program has malpractice and liability insurance and a fidelity bond.

155.21(2) *Executive director.* This individual shall have primary responsibility for the overall program operations. The duties of the executive director shall be clearly defined by the governing authority, when applicable, in accordance with the policies established by the governing body.

155.21(3) *Clinical oversight.* The program shall have appropriate clinical oversight to ensure quality of clinical services provided to client/patients. This may be provided in-house or through consultation.

Clinical oversight may include assisting the program in developing policies and procedures relating to the assessment and treatment of psychopathology, assisting in the training of the staff and providing

assistance to the clinical staff in assessment or treatment. The executive director or designee shall be ultimately responsible for clinical services and implementation of treatment services to client/patients.

155.21(4) *Staff development and training.* There shall be written policies and procedures that establish staff development. Staff development shall include orientation for staff and opportunities for continuing job-related education. For corporations organized under Iowa Code chapter 496C and sole practitioners, documentation of continuing education to maintain professional license or certification as specified in 155.21(8) will meet the requirements of this subrule.

a. Evidence of professional education, certification as specified in 155.21(8), licensing, or orientation which includes the following: psychosocial, medical, pharmacological, confidentiality, and tuberculosis and blood-borne pathogens; an orientation to the program and community resources; counseling skill development; HIV/AIDS (human immunodeficiency virus/acquired immune deficiency syndrome) information/education; and the attitudes, values and lifestyles of racially diverse cultures, other cultures and special populations.

b. The program shall establish on-site training programs or enter into relationships with outside resources capable of meeting staff training needs.

c. The staff development program shall take steps to ensure that staff members are kept informed of new developments in the field of assessment, evaluation, placement, treatment and rehabilitation.

d. In-service training programs shall be instituted when program operations or functions are changed and shall be designed to allow staff members to develop new skills so that they may effectively adapt to such changes.

e. Staff development activities and participation in state, national and regional training shall be planned and scheduled. These activities shall be documented in order to evaluate their scope, effectiveness, attendance, and amount of time spent on such efforts. The written plan for on-site staff development and activities for professional growth and development of personnel shall be based on the annual needs assessment and shall be available to all personnel.

f. Minutes shall be kept of on-site training activities and shall include, but not necessarily be limited to:

(1) Date of the meeting;

(2) Names of persons attending; and

(3) Topics discussed, to include name and title of presenters.

g. The individual responsible for supervising staff development activities shall conduct at least an annual needs assessment.

155.21(5) *Management information system.* Programs receiving Medicaid or state funding and programs performing OWI evaluations in accordance with 641—Chapter 157 shall submit client/patient data to the Iowa Department of Public Health, Division of Behavioral Health, Lucas State Office Building, 321 East 12th Street, Des Moines, Iowa 50319-0075, in accordance with reporting system procedures.

155.21(6) *Procedures manual.* All programs shall develop and maintain a procedures manual. This manual shall define the program's policies and procedures to reflect the program's activities. Revisions shall be entered with the date, name and title of the individual making the entries. This manual shall contain all of the required written policies, procedures, definitions, and all other documentation outlined throughout these standards. The manual shall contain a working table of contents covering all policies and procedures mandated by this chapter.

155.21(7) *Fiscal management.* The program shall ensure proper fiscal management which shall include the following:

a. The preparation and maintenance of an annual written budget which shall be reviewed and approved by the governing body prior to the beginning of the budget year.

b. The fiscal management system shall be maintained in accordance with generally accepted accounting principles, including internal controls to reasonably protect agency assets. This shall be verified by an independent fiscal audit of the program by the state auditor's office or certified public accountant based on an agreement entered into by the governing body. An annual fiscal audit shall not be required for programs with an annual budget of $75,000 or less.

c. There shall be an insurance program that provides for the protection of the physical and financial resources of the program which provides coverage for all people, buildings, and equipment. The insurance program shall be reviewed annually by the governing body.

d. Assessment and evaluation programs shall make public the OWI evaluation fees, and the client/patient shall be informed of the fee at the time of scheduling the appointment for the evaluation.

155.21(8) *Personnel.* Written personnel policies and procedures shall be developed by all programs except for sole practitioners. All program staff shall subscribe to a code of conduct found in professional certification or licensure as specified in 155.21(8).

a. All programs shall have written policies and procedures that address the following areas:

(1) Recruitment, selection, and certification of staff members;

(2) Recruitment and selection of volunteers;

(3) Wage and salary administration;

(4) Promotions;

(5) Employee benefits;

(6) Working hours;

(7) Vacation and sick leave;

(8) Lines of authority;

(9) Rules of conduct;

(10) Disciplinary actions and termination of employees;

(11) Methods for handling cases of inappropriate client/patient care;

(12) Work performance appraisal;

(13) Employee accidents and safety;

(14) Employee grievances; and

(15) Policy on staff persons suspected of using or abusing substances.

b. The written personnel policies and practices shall include an equal employment opportunity policy and an affirmative action plan for hiring members of protected classes that minimally comply with Iowa civil rights commission rules and any local ordinances.

c. There shall be written job descriptions that reflect the actual duties of the employee.

d. Job descriptions shall accurately reflect the actual job situation and shall be reviewed when necessary by the executive director or whenever there is a change in required qualifications or duties.

e. All positions shall have job descriptions included in the personnel section of the procedures manual or personnel record of the staff member.

f. The written personnel policies and practices shall include a mechanism for written evaluation of personnel performance on at least an annual basis. There shall be evidence that this evaluation is reviewed with the employee and that the employee is given the opportunity to respond to this evaluation.

g. There shall be a personnel record kept on each staff member. These records shall contain as applicable:

(1) Verification of training, experience, and all professional credentials relevant to the position;

(2) Job performance evaluations;

(3) Incident reports;

(4) Disciplinary actions taken; and

(5) Documentation of review and adherence to confidentiality laws and regulations. This review and agreement shall occur prior to assumption of duties.

h. There shall be written policies and procedures designed to ensure confidentiality of personnel records and a delineation of authorized personnel who have access to various types of personnel information.

i. Appropriately credentialed counselors.

(1) Any person providing screening, evaluations, assessments or treatment in accordance with this chapter shall meet at least one of the following conditions:

1. Currently maintain a substance abuse- or problem gambling-related credential acceptable to the department for providing treatment according to these rules.

2. Currently maintain active status as a licensed marital and family therapist (LMFT) licensed under Iowa Code chapters 154D and 147; a licensed mental health counselor (LMHC) licensed under Iowa Code chapters 154D and 147; a licensed independent social worker (LISW) licensed under Iowa Code chapters 154C and 147; or another licensed professional authorized by the Iowa Code to diagnose and treat DSM-IV disorders.

3. Currently maintain active status as a licensed master social worker (LMSW) licensed under Iowa Code chapters 154C and 147.

4. For a person beginning employment on or after July 1, 2010, at a program licensed in Iowa pursuant to this chapter who does not currently maintain one of the credentials described in "1" to "3" above, successfully complete and maintain one of those credentials within two years of the date on which the person begins to provide services.

5. Be employed before July 1, 2010, as a counselor at a program licensed in Iowa pursuant to this chapter. Those deemed qualified remain qualified only for work for that licensed program.

(2) Any person providing screening, evaluations, assessments or treatment in accordance with this chapter shall maintain a minimum of 30 hours of training within the person's primary scope of practice every two years, including a minimum of three hours of ethics training. In addition to practicing within their primary scope of practice, certified or licensed personnel may practice within a subspecialty in accordance with this chapter by maintaining a minimum of an additional 20 hours of training within the subspecialty every two years.

j. The program shall notify the department in writing within ten working days when a certified or licensed staff member has been sanctioned or disciplined by a certifying or licensing body.

k. There shall be written policies related to the prohibition of sexual harassment.

l. There shall be written policies related to the implementation of the Americans with Disabilities Act.

155.21(9) *Child abuse/dependent adult abuse/criminal history background check.*

a. Written policies and procedures shall prohibit mistreatment, neglect, or abuse of children and dependent adults and shall specify reporting and enforcement procedures for the program. Alleged violations shall be reported immediately to the director of the facility and appropriate department of human services personnel. Written policies and procedures on reporting alleged violations regarding substance abuse client/patients shall be in compliance with HIPAA and DHHS, 42 CFR Part 2, regulations on Confidentiality of Alcohol and Drug Abuse Patient Records. Written policies and procedures on reporting alleged violations regarding problem gambling client/patients shall be in compliance with HIPAA and the Iowa Code. Any employee found to be in violation of Iowa Code sections 232.67 through 232.70, as substantiated by a department of human services' investigation shall be subject to the program's policies concerning dismissal.

b. For each employee working within a juvenile services area as set forth in Iowa Code section 125.14A or with dependent adults as set forth in Iowa Code chapter 235B, the personnel record shall contain at a minimum:

(1) Documentation of a criminal history background check with the Iowa division of criminal investigation on all new applicants for employment. The background check shall include asking whether the applicant has been convicted of a crime.

(2) A written, signed and dated statement furnished by a new applicant for employment which discloses any substantiated reports of child abuse, neglect or sexual abuse or dependent adult abuse.

(3) Documentation of a check after hiring on probationary or temporary status, but prior to permanently employing the individual, with the Iowa central registry for any substantiated reports of child abuse, neglect or sexual abuse pursuant to Iowa Code section 125.14A or substantiated reports of dependent adult abuse for all employees hired on or after July 1, 1994, pursuant to Iowa Code chapter 235B.

c. A person who has a record of a criminal conviction or founded child abuse report or founded dependent adult abuse report shall not be employed, unless an evaluation of the crime or founded child abuse or founded dependent adult abuse has been made by the department of human services which concludes that the crime or founded child abuse or founded dependent adult abuse does not

merit prohibition of employment. If a record of criminal conviction or founded child abuse or founded dependent adult abuse does exist, the person shall be offered the opportunity to complete and submit Form 470-2310, Record Check Evaluation. In its evaluation, the department of human services shall consider the nature and seriousness of the crime or founded abuse in relation to the position sought, the time elapsed since the commission of the crime or founded abuse, the circumstances under which the crime or founded abuse was committed, the degree of rehabilitation and the number of crimes or founded abuses committed by the person involved.

d. Each treatment staff member shall complete two hours of training relating to the identification and reporting of child abuse and dependent adult abuse within six months of initial employment and at least two hours of additional training every five years thereafter.

155.21(10) *Client/patient case record maintenance.* There shall be written policies and procedures governing the compilation, storage and dissemination of individual client/patient case records.

a. These policies and procedures shall ensure that:

(1) The program exercises its responsibility for safeguarding and protecting the client/patient case record against loss, tampering, or unauthorized disclosure of information;

(2) Content and format of client/patient records are kept uniform; and

(3) Entries in the client/patient case record are signed and dated.

b. The program shall provide adequate physical facilities for the storage, processing, and handling of client/patient case records. These facilities shall include suitably locked, secured rooms or file cabinets.

c. Appropriate records shall be readily accessible to those staff members providing services directly to the client/patient and other individuals specifically authorized by program policy. Records should be kept in proximity to the area in which the client/patient normally receives services.

d. The program shall have a written policy governing the disposal and maintenance of client/patient case records. Client/patient case records shall be maintained for not less than seven years from the date they are officially closed.

e. Each file cabinet or storage area containing client/patient case records shall be locked.

f. The governing body shall establish policies that specify the conditions under which information on applicants or client/patients may be released and the procedures to be followed for releasing such information. Even if a program is not federally funded, all such policies and procedures regarding substance abuse client/patients shall be in accordance with HIPAA and the federal confidentiality regulations, "Confidentiality of Alcohol and Drug Abuse Patient Records," 42 CFR Part 2, effective June 9, 1987, which implement federal statutory provisions, 42 U.S.C. 290dd-3 applicable to alcohol abuse client/patient records, and 42 U.S.C. 290ee-3 applicable to drug abuse client/patient records, and state confidentiality laws and regulations. All such policies and procedures regarding problem gambling client/patients shall be in accordance with HIPAA and Iowa Code chapter 228.

g. Confidentiality of alcohol and drug abuse client/patient records. The confidentiality of alcohol and drug abuse client/patient records maintained by a program is protected by HIPAA and the "Confidentiality of Alcohol and Drug Abuse Patient Records" regulations, 42 CFR Part 2, effective June 9, 1987, which implement federal statutory provisions, 42 U.S.C. 290dd-3 applicable to alcohol abuse client/patient records, and 42 U.S.C. 290ee-3 applicable to drug abuse client/patient records.

h. Confidentiality of problem gambling client/patient records. The confidentiality of problem gambling client/patient records maintained by a program is protected by HIPAA and Iowa Code chapter 228.

i. The provision of treatment to a client/patient through any electronic means, including the Internet, telephone, or the Iowa communications network or any fiberoptic media, regardless of the location of the licensee, shall constitute the practice of treatment in the state of Iowa and shall be subject to regulation in accordance with Iowa Code chapter 125 and 2009 Iowa Code Supplement section 135.150 and these rules. A licensee who provides services via electronic media shall inform the client/patient of the limitations and risks associated with such services and shall document in the client/patient case record that such notice has been provided.

j. Confidentiality and transfer of records. Upon receipt of a properly executed written release of information signed by the client/patient, the program shall release client/patient records in a timely manner. A program shall not refuse to transfer or release client/patient records related to continuation of care solely because payment has not been received. A program may refuse to release client/patient records which are unrelated to continuation of care if payment has not been received. A program may refuse to file the reporting form required by 641—subrule 157.3(1), "Notice Iowa Code 321J—Confidential Medical Record," reporting screening, evaluation, and treatment completion, if payment has not been received for such services.

155.21(11) *Placement screening, admission, assessment and evaluation.*

a. The program shall conduct an initial assessment for substance abuse client/patients which shall include evaluation of the American Society of Addiction Medicine Patient Placement Criteria for the Treatment of Substance-Related Disorders, Second Edition, Revised, or other national or recognized criteria approved by the department upon granting a variance by the director in accordance with 641—Chapter 178 for determining the eligibility of individuals for placement and admission. The program shall utilize a recognized diagnostic test/tool to determine substance abuse or dependence as defined in the DSM-IV (Diagnostic and Statistical Manual of Mental Disorders, Fourth Edition).

b. The program shall conduct an initial assessment for problem gambling client/patients that shall utilize a recognized diagnostic test/tool to determine pathological gambling as defined in the DSM-IV (Diagnostic and Statistical Manual of Mental Disorders, Fourth Edition). The client/patient is a problem gambler if the client/patient meets any of the diagnostic criteria for pathological gambling.

c. The program shall have written policies and procedures governing a uniform assessment process that defines:

(1) The types of information to be gathered on all individuals upon admission;

(2) Procedures to be followed when accepting referrals from outside agencies or organizations;

(3) The types of records to be kept on all individuals applying for services.

d. Following admission, the comprehensive assessment (psychosocial history) shall be an analysis and synthesis of the client/patient's status and shall address the client/patient's strengths and needs, which may be documented in the comprehensive assessment or in the treatment plan, and areas of clinical concern. Sufficient information shall be collected so that a comprehensive treatment plan can be developed. The comprehensive treatment plan shall be developed within the period of time between admission and the first review date specified for that particular level of care within the management of care review process, or within 30 days for problem gambling client/patients.

e. At the time of admission, documentation shall be made that the individual has been informed of:

(1) General nature and goals of the program;

(2) Rules governing client/patient conduct and infractions that can lead to disciplinary action or discharge from the program;

(3) In a nonresidential program, the hours during which services are available;

(4) Treatment costs to be borne by the client/patient, if any;

(5) Client/patient's rights and responsibilities;

(6) Confidentiality laws, rules and regulations;

(7) HIV/AIDS information; and

(8) Safety and emergency procedures for residential, halfway house, inpatient and treatment services with housing.

f. The results of the screening and admission process shall be clearly explained to the client/patient and to the client/patient's family when appropriate. This shall be documented in the client/patient record.

155.21(12) *Treatment plans.* Based upon the initial assessment, an individualized written treatment plan shall be developed and recorded in the client/patient case record. The program shall have written policies and procedures governing a uniform process for treatment planning.

a. A treatment plan shall be developed as soon after the client/patient's admission as is clinically feasible and within the period of time between admission and the next review date specified for that particular level of care within the management of care review process.

b. The individualized treatment plan shall minimally contain:

(1) A clear and concise statement of the client/patient's current strengths and needs, which may be documented in the treatment plan or in the comprehensive assessment;

(2) Clear and concise statements of the short- and long-term goals the client/patient will be attempting to achieve;

(3) Type and frequency of therapeutic activities in which the client/patient will be participating;

(4) The staff person(s) to be responsible for the client/patient's treatment; and

(5) Treatment plans shall be culturally and environmentally specific so as to meet the needs of the client/patient. Treatment plans shall be written in a manner readily understandable to the client/patient, with assistance if necessary.

c. Treatment plans shall be developed in partnership with the client/patient and shall be reviewed by the primary counselor and the client/patient as often as necessary and in accordance with the time frames specified within the management of care review process.

d. The reviews shall consist of: a reassessment of the client/patient's current status in conjunction with the continued stay review criteria, accomplishments and needs, and a redefining of treatment goals when appropriate. The date of the review, as well as any changes, shall be recorded in the record.

e. The use of abstract terms, technical jargon, or slang should be avoided in the treatment plan. The program should provide the client/patient with copies of all treatment plans upon request.

155.21(13) *Progress notes.* A client/patient's progress and current status in meeting the goals set in the treatment plan shall be recorded in the client/patient case record. Information will be noted following each individual counseling session and a summary of group counseling services shall be documented at least weekly.

a. Entries shall be filed in chronological order and shall include the date services were provided or observations made, the date the entry was made, and the signature or initials and staff title of the individual rendering the services. All progress notes shall be legibly entered into the client/patient case record in permanent pen, by typewriter, or by computer. In those instances where records are maintained electronically, a staff identification code number authorizing access shall be accepted in lieu of a signature.

b. All entries that involve subjective interpretations of a client/patient's progress should be supplemented with a description of the actual behavioral observations which were the basis for the interpretation.

c. The use of abstract terms, technical jargon, or slang should be avoided in progress notes.

d. The program shall develop a uniform progress note format to be used by all clinical staff.

155.21(14) *Client/patient case record contents.* There shall be a case record for each client/patient that contains:

a. Results of all examinations, tests, and screening and admissions information;

b. Reports from referring sources;

c. Treatment plans;

d. Continued stay and discharge reviews;

e. Medication records, which shall allow for the monitoring of all medications administered and self-administered and the detection of adverse drug reactions. All medication orders in the client/patient case records shall define at least the name of the medication, dose, route of administration, frequency of administration, the name of the physician who prescribed the medication, and the name of the person administering or dispensing the medication;

f. Reports from outside resources shall be dated and include the name of the resource;

g. Multidisciplinary case conference and consultation notes, including the date of the conference or consultation, recommendations made, actions taken, and individuals involved;

h. Correspondence related to the client/patient, including all letters and dated notations of telephone conversations relevant to the client/patient's treatment;

i. Treatment consent forms, if applicable;

j. Information release forms;

k. Progress notes;

l. Records of services provided;

m. Discharge summaries of services provided shall be completed within 30 days of discharge and shall be sufficiently detailed to identify the types of services the client/patient has received and action taken to address specific problems identified. General terms such as "counseling" or "activities" shall be avoided in describing services;

n. Management information system or other appropriate data forms; and

o. Incident reports.

p. Records of financial counseling services for problem gambling client/patients. The treatment program shall offer financial counseling services to problem gambling client/patients. Financial counseling services shall be provided in-house or through consultation. If the treatment program determines that the problem gambling client/patient has financial problems, then financial counseling services shall include assisting the client/patient in preparing a budget and discussing financial debt options, including restitution and bankruptcy.

155.21(15) *Drug screening.* All programs serving client/patients who are receiving treatment for use or abuse of a controlled substance shall establish policies and procedures, if applicable, for the collection of urine specimens and utilization of urinalysis results.

a. Urine specimens obtained from client/patients shall be collected under direct supervision and analyzed as indicated by the program, or the program shall have a policy in place to reduce the client/patient's ability to skew the test.

b. Any laboratory used by the program for urine testing and analysis shall comply, if applicable, with all federal and state proficiency testing programs.

c. Any program conducting on-site urine testing shall comply with the Clinical Laboratory Improvement Act regulations.

d. Client/patient records shall reflect the manner in which urine test results are utilized in treatment.

e. For programs with a urinalysis service, policies shall be developed concerning measures to be employed when urine specimens of client/patients are found to contain substances.

155.21(16) *Medical services.* The treatment program shall have policies and procedures developed in conjunction with a physician to examine and evaluate client/patients/concerned persons seeking or undergoing treatment or rehabilitation.

a. Individuals who enter an inpatient, residential, halfway house, chemotherapy or emergency care facility (ASAM Levels III.1, III.3, III.5, III.7 and IV) shall undergo a medical history and physical examination. Laboratory examinations may be performed as deemed necessary by the physician. The medical history, physical examination, and necessary laboratory examinations shall be performed as soon as possible, however minimally, as follows:

(1) Inpatient medically managed and medically monitored residential treatment services (ASAM Levels IV and III.7) within 24 hours of admission;

(2) Primary residential and extended residential treatment (Levels III.5 and III.3) within 7 calendar days of admission; and

(3) Halfway house services (Level III.1) within 21 calendar days of admission.

b. For individuals who enter a Level I or Level II service, a medical history shall be obtained upon admission.

c. A program may accept medical history and physical examination results from referral sources if the medical history and examination were completed no more than 90 days prior to admission.

d. Rescinded IAB 10/3/12, effective 11/7/12.

155.21(17) *Emergency medical services.* The program shall ensure, by affiliation agreement, or contract, that emergency medical services at a general hospital are available on a 24-hour basis.

a. The program will maintain emergency medical service coverage on a 24-hour, seven days a week, basis.

b. The program shall ensure that all community service providers, medical facilities, law enforcement agencies, and other appropriate personnel are informed of the 24-hour emergency services and treatment available.

155.21(18) *Medication control.* Policies and procedures shall be developed to ensure that prescription and over-the-counter drugs are administered or self-administered safely and properly in accordance with federal, state and local laws and regulations. The written policies and procedures shall include, but not be limited to, the following:

a. Authorized personnel who administer medications shall be qualified, and an updated list of such personnel shall be maintained. Only the following are designated by 657—8.32(124,155A) as qualified individuals to whom a physician can delegate the administration of controlled substances:

(1) Persons who have successfully completed a medication administration course reviewed by the board of pharmacy examiners.

(2) Advanced emergency medical technicians and paramedics.

(3) Licensed physician assistants.

(4) Licensed pharmacists.

(5) Nurse, intern or other qualified individual delegated the responsibility to administer a prescription drug by a practitioner, licensed by the appropriate state board, to administer drugs to patients, in accordance with Iowa Code section 155A.4(2)*"c."*

b. Medications shall be administered only in accordance with the instructions of the attending physician. The type and amount of the medication, the time and date, and the staff member administering the medication shall be documented in the client/patient's record.

c. Self-administration of prescription medication shall be observed by a staff member who has been oriented to the program's policies and procedures on self-administration. Self-administration of prescription medications shall be permitted only when the client/patient's medication is clearly labeled. There shall be written policies and procedures relative to self-administration of prescription medications by client/patients and only when:

(1) Medications are prescribed by a physician.

(2) The physician agrees that the client/patient can self-administer the drug.

(3) What is taken, how, and when, are documented in the record of the client/patient.

d. Drugs/medications shall be prescribed by a physician or other practitioner authorized to prescribe under Iowa law.

e. Prescription drugs shall not be administered or self-administered to a client/patient without a written order signed by a physician or other practitioner authorized to prescribe under Iowa law. All prescribed medications shall be clearly labeled indicating the client/patient's full name, physician's name, prescription number, name and strength of the medication, dosage, directions for use, date of issue; and name, address and telephone number of the pharmacy or physician issuing the medication. Medications shall be packaged and labeled according to state and federal guidelines.

f. If the medications the client/patient brings to the program are not to be used, they shall be packaged, sealed and stored. The sealed packages of medications shall be returned to the client/patient, family or significant others at the time of discharge.

g. Accountability and control of medications.

(1) There shall be a specific routine for medication administration, indicating dose schedules and standardization of abbreviations.

(2) There shall be specific methods for control and accountability of medication products throughout the program.

(3) The staff member in charge of medications shall provide for monthly inspection of all storage units.

(4) Medication containers having soiled, damaged, illegible, or makeshift labels shall be returned to the issuing pharmacist, pharmacy, or physician for relabeling or disposal.

(5) Unused prescription drugs prescribed for residents who have left the facility without their medication shall be destroyed by the person in charge with a witness and notation made on the resident's record. When a resident is discharged or leaves the facility, medications currently being administered shall be sent, in the original container, with the resident or with a responsible agent, and with the approval of the physician.

h. Medication storage shall be maintained in accordance with the security requirements of federal, state and local laws.

(1) All medication shall be maintained in locked storage. Controlled substances shall be maintained in a locked box within the locked cabinet.

(2) Medications requiring refrigeration shall be kept in a refrigerator and separated from food and other items.

(3) Disinfectants and medication for external use shall be stored separately from internal and injectable medications.

(4) The medication for each client/patient shall be stored in the original containers.

(5) All potent poisonous or caustic medication shall be plainly labeled, stored separately from other medication in a specific well-illuminated cabinet, closet, or storeroom, and made accessible only to authorized persons.

i. Dispensed from a licensed pharmacy. Medication provided to a client/patient shall be dispensed only from a licensed pharmacy in the state of Iowa in accordance with the pharmacy laws in the Code of Iowa, or from a licensed pharmacy in another state according to the laws of that state, or by a licensed physician.

j. Use of medications. Prescription medications prescribed for one resident may not be administered to or allowed in the possession of another resident.

k. Patient reaction. Any unusual client/patient reaction to a medication shall be documented in the client/patient record and reported to the attending physician immediately.

l. Dilution or reconstitution of medication. Dilution or reconstitution and labeling of medication shall be done only by a licensed pharmacist.

155.21(19) *Management of care.* The program shall ensure appropriate level of care utilization by implementing and maintaining the written placement screening, continuing service, and discharge criteria process developed by the department.

a. The program shall also address underutilization, overutilization, and the effective use of levels of care available.

b. The time frames for management of care activities minimally shall be implemented within 30 days for Levels I and III.1; within 7 days for Levels II.1, II.5, III.3 and III.5; and daily for Levels III.7 and IV.

c. The discharge planning process shall begin at admission and shall include a determination of the client/patient's continued need for treatment services and development of a plan to address ongoing client/patient needs posttreatment. Discharge planning may or may not include a document identified as a discharge plan.

155.21(20) *Quality improvement.* The program shall have an ongoing quality improvement program designed to objectively and systematically monitor and evaluate the quality and appropriateness of client/patient care, pursue opportunities to improve client/patient care, and resolve identified problems. Quality improvement efforts shall be facilitywide in scope and include review of clinical and professional services.

a. There shall be a written plan for a quality improvement program that describes the objectives, organization, scope, and mechanisms for overseeing the effectiveness of monitoring, evaluation, and problem-solving activities.

b. The program shall establish written policies and procedures to both describe and document the quality improvement of the program's monitoring and evaluation activities. The policies and procedures shall ensure that:

(1) Information is collected or screened by a designated individual, individuals, or committee. Quality improvement activities may be contracted through all outside resources;

(2) Objective criteria shall be utilized in the development and application of criteria relating to the care or service it provides; and

(3) Objective criteria shall be utilized in the evaluation of the information collected in order to identify important problems in, or opportunities to improve, client/patient care and clinical performance.

c. The program shall document that the quality of client/patient care is improved and identified problems are resolved through actions taken as appropriate by the program's administrative and supervisory staffs and through professional staff functions.

d. Necessary information shall be communicated among program components, modalities, or services when problems or opportunities to improve client/patient care involve more than one program component or service.

e. The program shall ensure that the status of identified problems is tracked to ensure improvement or resolution.

f. Information from program components or services and the findings of discrete quality improvement activities are used to detect trends, patterns of performance, or potential problems that affect more than one program component or service.

g. The objectives, scope, organization, and effectiveness of the quality improvement program are evaluated at least annually and revised as necessary.

155.21(21) *Building construction and safety.* All buildings in which client/patients receive screenings, evaluations, assessments or treatment shall be designed, constructed, equipped, and maintained in a manner that provides for the physical safety of client/patients, personnel, and visitors.

a. If required by local jurisdiction, all programs shall maintain a certification of occupancy.

b. During all phases of construction or alterations of buildings, the level of life safety shall not be diminished in any occupied area. The construction shall be in compliance with all applicable federal, state, and local codes.

c. New construction shall comply with Iowa Code chapter 104A and all applicable federal and local codes and provide for safe and convenient use by disabled individuals.

d. All programs shall have written policies and procedures to provide a safe environment for client/patients, personnel, and visitors and to monitor that environment. The program shall document implementation of the procedures. The written policies and procedures shall include, but not be limited to, the following:

(1) The process for the identification, development, implementation, and review of safety policies and procedures for all departments or services.

(2) The promotion and maintenance of an ongoing, facilitywide hazard surveillance program to detect and report all safety hazards related to client/patients, visitors, and personnel.

(3) The process by which the staff is to dispose of biohazardous waste within the clinical service areas.

(4) All program areas.

1. Stairways, halls, and aisles shall be of substantial nonslippery material, shall be maintained in a good state of repair, shall be adequately lighted and shall be kept free from obstructions at all times. All stairways shall have handrails.

2. Radiators, registers, and steam and hot water pipes shall have protective covering or insulation. Electrical outlets and switches shall have wall plates.

3. For juvenile facilities, fuse boxes shall be under lock and key or six feet above the floor.

4. Facilities shall have written procedures for the handling and storage of hazardous materials.

5. Facilities shall have policies and procedures for weapons removal.

6. Swimming pools shall conform to state and local health and safety regulations. Adult supervision shall be provided at all times when children are using the pool.

7. Facilities shall have policies regarding fishing ponds, lakes, or any bodies of water located on or near the program and accessible to the client/patient.

155.21(22) *Outpatient facility.* The outpatient facility shall be safe, clean, well ventilated, properly heated, free from vermin and rodents and in good repair.

a. The facility shall be appropriate for providing services available from the program and for protecting confidentiality.

b. Furniture shall be in good repair.

c. There shall be a written plan outlining procedures to be followed in the event of fire or tornado. These plans shall be conspicuously displayed at the facility.

155.21(23) *Therapeutic environment.* All programs shall establish an environment that enhances the positive self-image of client/patients and preserves their human dignity. The grounds of the program shall have adequate space for the program to carry out its stated goals. When client/patient needs or program goals involve outdoor activities, these activities and programs shall be appropriate to the ages and clinical needs of the client/patient.

a. All services shall be accessible to people with disabilities or the program shall have written policies and procedures that describe how people with disabilities can attain access to the facility for necessary services. All programs shall comply with the Americans with Disabilities Act.

b. The waiting or reception areas shall be of adequate size, have appropriate furniture and be located so as to ensure confidentiality of client/patients in session or receiving services.

c. Program staff shall be available in waiting or reception areas so as to address the needs of the client/patients and visitors.

d. The program shall have written policies and procedures regarding chemical substances in the facility.

e. Smoking shall be prohibited within any facilities or any portion of a facility used for outpatient drug and alcohol treatment services and programs. Smoking shall be prohibited, except in designated areas within facilities or portions of facilities used for inpatient and residential drug and alcohol treatment services.

f. A program or person shall not sell, give, or otherwise supply any tobacco, tobacco products, or cigarettes to any person under 18 years of age, and a person under 18 years of age shall not smoke, use, purchase, or attempt to purchase, any tobacco, tobacco products, or cigarettes.

g. There shall be written policies and procedures to address the following:

(1) There shall be a policy to inform client/patients of their legal and human rights at the time of admission;

(2) Client/patient communication, opinions, or grievances, with a mechanism for redress;

(3) Prohibition of sexual harassment; and

(4) Client/patient rights to privacy.

[**ARC 8792B**, IAB 6/2/10, effective 7/1/10; **ARC 9774B**, IAB 10/5/11, effective 11/9/11; **ARC 0365C**, IAB 10/3/12, effective 11/7/12]

641—155.22(125,135) Inpatient, residential, and halfway house safety. Specific safety standards for inpatient, residential and halfway house safety.

155.22(1) *Health and fire safety inspections.* Inpatient, residential and halfway house substance abuse treatment facilities shall comply with appropriate department of inspections and appeals rules, state fire marshal's rules and fire ordinances, and appropriate local health, fire, occupancy code, and safety regulations. The program shall maintain documentation of such compliance.

a. Inpatient, residential and halfway house substance abuse treatment facilities required to be licensed by the department of public health shall comply with standards for food service sanitation in accordance with rules promulgated by the department of inspections and appeals pursuant to 481—Chapter 32 of the Iowa Administrative Code and Iowa Code chapter 137B.

b. Food service operations in substance abuse inpatient, residential, and halfway house treatment facilities shall be inspected on an annual basis by the department of inspections and appeals or appropriate local boards of health having agreements with the department of inspections and appeals to conduct such inspections.

c. The use of door locks or closed sections shall be approved by the fire marshal, professional staff and governing body.

155.22(2) *Emergency preparedness.* The inpatient, residential and halfway house programs shall have an emergency preparedness program designed to provide for the effective utilization of available resources so that client/patient care can be continued during a disaster.

[**ARC 8792B**, IAB 6/2/10, effective 7/1/10]

641—155.23(125,135) Specific standards for inpatient, residential, and halfway house service. An inpatient, residential, and halfway house service shall be designed to provide comprehensive diagnostic, treatment and rehabilitation services in a 24-hour therapeutic setting.

155.23(1) *Hours of operation.* An inpatient, residential, and halfway house service shall operate seven days per week, 24 hours a day.

155.23(2) *Meals.* Inpatient and residential programs shall provide a minimum of three meals per day to each client/patient enrolled in the program. Inpatient, residential, and other programs where client/patients are not present during mealtime shall make provisions to make available the necessary meals. Menus shall be prepared in consultation with a dietitian. If client/patients are allowed to prepare meals, the program shall document conformity with all commonly accepted policies and procedures of state health regulations and food hygiene.

155.23(3) *Consultation with counsel.* An inpatient, residential, and halfway house program shall have policies and procedures which will ensure that all client/patients in a facility have opportunity for and access to consultation with legal counsel at any reasonable time.

155.23(4) *Visitation with family and friends.* An inpatient, residential, and halfway house program shall have policies and procedures which will ensure opportunities for continuing contact with family and friends. If such visiting opportunities are clinically contraindicated, they shall be approved on an individual basis by the treatment supervisor and subject to review by the executive director. The justification for restrictions shall be documented in the client/patient record. If clinical indications require restrictions on visitation, such restrictions shall be evaluated for continuing therapeutic effectiveness every seven days by the treatment supervisor and primary counselor.

The program shall establish visiting hours which shall be conspicuously displayed at the facility and in such a manner to be visible to those entering the facility.

155.23(5) *Telephone use.* An inpatient, residential, and halfway house program shall have policies and procedures which allow client/patients to conduct private telephone conversations with family and friends at the facility. If such are clinically contraindicated, they shall be approved on an individual basis by the treatment supervisor and subject to review by the executive director. The justification for restrictions shall be documented in the client/patient record. If clinical indications require restrictions, such shall be evaluated for continuing therapeutic effectiveness every seven days by the treatment supervisor and primary counselor. Access to the telephone shall be available during reasonable hours as defined by the program in written policies and procedures except for emergency calls, which may be received at the time of the call, or made when necessary.

155.23(6) *Written communication.* An inpatient, residential, and halfway house program shall have policies and procedures which ensure that neither mail nor other communications to or from a client/patient in a facility is intercepted, read, or censored.

155.23(7) *Facility.* An inpatient, residential, and halfway house facility shall be safe, clean, well-ventilated, properly heated, in good repair, and free from vermin to ensure the well-being of residents.

a. Client/patient bedrooms shall include:

(1) A sturdily constructed bed;

(2) A clean mattress protected with a clean mattress pad;

(3) A designated space for personal possessions and for hanging clothing in proximity to the sleeping area; and

(4) Windows in bedrooms shall have curtains or window blinds.

b. Sleeping areas shall include:

(1) Doors for privacy;

(2) Partitioning or placement of furniture to provide privacy for all client/patients;

(3) The number of client/patients in a room shall be appropriate to the goals of the facility and to the ages, developmental levels, and clinical needs of the client/patients;

(4) Client/patients will be allowed to keep and display personal belongings and add personal touches to the decoration of their rooms in accordance with program policy;

(5) Staff shall respect the client/patient's right to privacy by knocking on the door of the client/patient's room before entering.

c. Clean linen, towels and washcloths shall be available minimally on a weekly basis and more often as needed.

d. Bathrooms shall provide residents with facilities necessary for personal hygiene and personal privacy, including:

(1) A safe supply of hot and cold running water which is potable;

(2) Clean towels, electric hand dryers or paper towel dispensers, and an available supply of toilet paper and soap;

(3) Natural or mechanical ventilation capable of removing odors;

(4) Tubs or showers shall have slip-proof surfaces;

(5) Partitions with doors which provide privacy if a bathroom has multiple toilet stools;

(6) Toilets, wash basins, and other plumbing or sanitary facilities shall at all times be maintained in good operating condition; and

(7) The ratio of bathroom facilities to residents shall be one tub or shower head per 12 residents, one wash basin per 12 residents and one toilet per 8 residents.

(8) If the facility is coeducational, the program shall designate and so identify separate bathrooms for male and female client/patients.

e. There shall be a written plan outlining procedures to be followed in the event of fire or tornado. These plans shall be conspicuously displayed on each floor or dormitory area that client/patients, residents, or visitors occupy at the facility and shall be explained to all inpatient, residential, and halfway house client/patients as a part of their orientation to the program. Fire drills shall be conducted at least monthly and tornado drills conducted during the tornado season from April through October.

f. Written reports of annual inspections by state or local fire safety officials shall be maintained with records of corrective action taken by the program on recommendations articulated in such reports.

g. Smoking shall not be permitted in bedrooms.

h. Every facility shall have an adequate water supply from an approved source. A municipal water system shall be considered as meeting this requirement. Private water sources shall be tested annually.

i. The facility shall allow for the following:

(1) Areas in which a client/patient may be alone when appropriate; and

(2) Areas for private conversations with others.

j. Articles of grooming and personal hygiene that are appropriate to the client/patient's age, developmental level, and clinical state shall be readily available in a space reserved near the client/patient's sleeping area. If clinically indicated as determined by the treatment supervisor, a client/patient's personal articles may be kept under lock and key by staff. If access to potentially dangerous grooming aids or other personal articles is contraindicated for clinical reasons, a member of the professional staff shall explain to the client/patient the conditions under which the articles may be used; and the clinical rationale for these conditions shall be documented in the client/patient case record.

k. Housekeeping. If client/patients take responsibility for maintaining their own living quarters and for day-to-day housekeeping activities of the program, these responsibilities shall be clearly defined in writing and be a part of the client/patient orientation program. Staff assistance and equipment shall be provided as needed.

l. Clothing. Client/patients shall be allowed to wear their own clothing in accordance with program rules. If clothing is provided by programs, it shall be suited to the climate and appropriate. In addition, a laundry room shall be accessible so client/patients may wash their clothing.

m. Noise-producing equipment. The program shall ensure that the use and location of noise-producing equipment and appliances, such as television sets, radios, and CD players do not interfere with clinical and therapeutic activities.

n. Recreation and outdoor activities. The program shall provide recreation and outdoor activities, unless contraindicated for therapeutic reasons.

155.23(8) *Religion-culture.* The inpatient, residential, and halfway house program shall have a written description of its religious orientation, particular religious practices that are observed, and any religious restrictions. This description shall be provided to the client/patients, parent(s) or guardian, and the placing agency at the time of admission in compliance with HIPAA and DHHS, 42 CFR Part 2, regulations on Confidentiality of Alcohol and Drug Abuse Patient Records. This information shall also be available to adults during orientation. The client/patient shall have the opportunity to participate

in religious activities and services in accordance with the client/patient's own faith or that of a minor client/patient's parent(s) or guardian. The facility shall, when necessary and reasonable, arrange transportation for religious activities.
[**ARC 8792B**, IAB 6/2/10, effective 7/1/10]

641—155.24(125,135) Specific standards for inpatient, residential, and halfway house services for juveniles. An inpatient, residential, and halfway house program that houses one or more juveniles under the age of 18 must also comply with the following standards.

155.24(1) *Personal possessions.* The inpatient, residential, and halfway house program shall allow a child to bring personal belongings. However, the inpatient, residential, and halfway house program shall, as necessary, limit or supervise the use of these items. In addition, the program shall ensure that each child has adequate, clean, well-fitting, attractive, and seasonable clothing as required for health, comfort, and physical well-being. The clothes should be appropriate to age, sex and individual needs.

155.24(2) *Family involvement.* There shall be written policies and procedures for family involvement that shall encourage continued involvement of the family.

155.24(3) *Children's money.* Money earned or received as a gift or as an allowance by a child in care shall be deemed to be that child's personal property. The program shall have a written policy on the child's use of funds. The program shall maintain a separate accounting system for children's money.

155.24(4) *Discipline.* The inpatient, residential, and halfway house program shall have written policies and procedures regarding methods used for control and discipline of children which shall be available to all staff and to the child's family. Agency staff shall be in control of and responsible for discipline at all times. Discipline shall not include the withholding of basic necessities such as food, clothing, or sleep.

a. The program shall have a policy that clearly prohibits staff or the children from utilizing corporal punishment as a method of disciplining or correcting children. This policy is to be communicated, in writing, to all staff of the facility.

b. Behavior expectations. The program shall make available to the child and the child's parents or guardian written policies regarding the following areas:

(1) The general expectations of behavior including the program's rules and practices.

(2) The range of reasonable consequences that may be used to deal with inappropriate behavior.

155.24(5) *Number of staff.* The program shall have 7 days per week, 24-hour per day coverage. The number and qualifications of the staff will vary depending on the needs of the children.

a. Inpatient, residential, halfway house programs, and community residential facilities as defined in 441—Chapter 114, shall have an on-call system operational 24 hours a day to provide supervisory consultation. The program shall have a written plan documenting this system. During prime programming time, there shall be at least a one-to-eight, staff-to-client/patient ratio.

b. Comprehensive residential facilities, as defined in 441—Chapter 115, shall have at least a one-to-five, staff-to-client/patient ratio during prime programming time. A staff person shall be in each living unit at all times when children are in residence, and there shall be a minimum of three nighttime checks between the hours of 12 midnight and 6 a.m. These checks shall be logged. Policies and procedures for nighttime checks shall be in writing.

c. The program's prime programming time shall be defined in writing.

155.24(6) *Illness, accident, death, or absence from the inpatient, residential, and halfway house program.* The program shall have written policies and procedures to notify the child's parent(s), guardian, and responsible agency of any serious illnesses, incidents involving serious bodily injury or absence, or circumstances causing removal of the child from the facility in compliance with HIPAA and DHHS, 42 CFR Part 2, regulations on Confidentiality of Alcohol and Drug Abuse Patient Records. In the event of the death of a child, the program shall immediately notify the physician, the child's parent(s) or guardian, the placing agency, and the appropriate state authority.

155.24(7) *Educational services.* An educational program shall be available for each child in accordance with abilities and needs. The educational and teaching standards established by the state department of public instruction shall be met.

155.24(8) *Needs of the juvenile.* Program services and rules shall be designed to meet individual needs of the juvenile.
[**ARC 8792B**, IAB 6/2/10, effective 7/1/10]

641—155.25(125,135) Specific standards for assessment and evaluation programs.

155.25(1) *Definitions.* Rescinded IAB 6/2/10, effective 7/1/10.

155.25(2) *Governing body.* Each program shall have a formally designated governing body that is representative of the community being served, complies with Iowa Code chapter 504 and is the ultimate authority for the overall program operations. Persons in private practice as sole practitioners shall be exempt from this subrule except for the requirements to have malpractice and liability insurance.

a. The governing body shall develop and adopt written bylaws and policies that define the powers and duties of the governing body, its committees, advisory groups, and the executive director. These bylaws shall be reviewed and revised by the governing body as necessary.

b. The bylaws shall minimally specify the following:

(1) The type of membership;

(2) The term of appointment;

(3) The frequency of meetings;

(4) The attendance requirements; and

(5) The quorum necessary to transact business.

c. Minutes of all meetings shall be kept and be available for review by the department and shall include, but not necessarily be limited to:

(1) Date of the meeting;

(2) Names of members attending;

(3) Topics discussed; and

(4) Decisions reached and actions taken.

d. The duties of the governing body shall include, but not necessarily be limited to, the following:

(1) Appointment of a qualified executive director who shall have the responsibility and authority for the management of the program in accordance with the governing body's established policies;

(2) Establish an effective control which will ensure that quality services are delivered;

(3) Review and approve the program's annual budget; and

(4) Approve all contracts.

e. The governing body shall develop and approve policies for the effective operation of the program.

f. The governing body shall be responsible for all funds, equipment, supplies and the facility in which the program operates. The governing body shall be responsible for the appropriateness and adequacy of services provided by the program.

g. The governing body shall at least annually prepare a report which will include, but not necessarily be limited to, the following items:

(1) The name, address, occupation, and place of employment of each governing body member;

(2) Any family relationship which a member of the governing body may have to a program staff member; and

(3) Where applicable, the names and addresses of all owners or controlling parties whether they are individuals, partnerships, corporation body, or subdivision of other bodies, such as a public agency, or religious group, fraternity, or other philanthropic organization.

h. The governing body shall assume responsibility in seeing that the program has malpractice and liability insurance and a fidelity bond.

155.25(3) *Executive director.* This individual shall have primary responsibility for the overall program operations. The duties of the executive director shall be clearly defined by the governing authority, when applicable.

155.25(4) *Clinical oversight.* The program shall have appropriate clinical oversight to ensure quality of clinical services provided to client/patients. This may be provided in house or through a consultation agreement.

155.25(5) *Staff development and training.* There shall be written policies and procedures that establish staff development. Staff development shall include orientation for staff and opportunities for continuing job-related education. For corporations organized under Iowa Code chapter 496C and sole practitioners, documentation of continuing education to maintain a professional license or substance abuse certification as specified in 155.21(8) will meet the requirement of this subrule.

a. Evidence of professional education, substance abuse certification or licensing as specified in 155.21(8), or orientation which includes the following: psychosocial, medical, pharmacological, confidentiality, tuberculosis, community resources; screening, evaluation, HIV/AIDS (human immunodeficiency virus/acquired immune deficiency syndrome) information/education; and the attitudes, values and lifestyles of racially diverse cultures, other cultures and special populations.

b. Staff development shall ensure that staff members are kept informed of new developments in the field of substance abuse screening, evaluation and placement.

155.25(6) *Management information system.* Programs receiving Medicaid or state funding and programs performing OWI evaluation in accordance with 641—Chapter 157 shall submit client/patient data to the Iowa Department of Public Health, Division of Behavioral Health, Lucas State Office Building, 321 East 12th Street, Des Moines, Iowa 50319-0075, in accordance with substance abuse reporting system procedures.

155.25(7) *Procedures manual.* All programs shall develop and maintain a procedures manual. This manual shall define the program's policies and procedures to reflect the program's activities. Revisions shall be entered with the date, name and title of the individual making the entries. This manual shall contain all of the required written policies, procedures, definitions, and all other documentation required by these standards in the following areas:

a. Legal authority and organization;

b. Personnel policies, except for sole practitioner;

c. Emergency medical services;

d. Staff development;

e. Maintenance of client/patient case records;

f. Confidentiality of client/patient records;

g. Clinical services, such as placement screening, evaluation and assessment; and

h. Relationship with other providers.

155.25(8) *Fiscal management.* The program shall ensure proper fiscal management.

a. The fiscal management system shall be maintained in accordance with generally accepted accounting principles, including internal controls to reasonably protect the agency assets.

b. The OWI evaluation fee schedule shall be made public, and the client/patient shall be informed of the fee schedule at the time of scheduling the evaluation.

c. There shall be an insurance program that provides for the protection of the physical and financial resources of the program which provides coverage for all people, buildings, and equipment. The insurance program shall be reviewed annually by the governing body.

155.25(9) *Personnel.* Written personnel policies and procedures shall be developed, except for the sole practitioner.

a. These policies and procedures shall address the following areas:

(1) Recruitment, selection, and certification of staff members;

(2) Wage and salary administration;

(3) Promotions;

(4) Employee benefits;

(5) Working hours;

(6) Vacation and sick leave;

(7) Lines of authority;

(8) Rules of conduct;

(9) Disciplinary actions and termination of employees;

(10) Methods for handling cases of inappropriate client/patient care;

(11) Work performance appraisal;

(12) Employee accidents and safety;

(13) Employee grievances; and

(14) Policy on staff persons suspected of using or abusing substances.

b. The written personnel policies and practices shall include an equal employment opportunity policy and an affirmative action plan for hiring members of protected classes that minimally comply with Iowa civil rights commission rules and any local ordinances.

c. There shall be written job descriptions that reflect the actual job situation.

d. The written personnel policies and practices shall include a mechanism for a written evaluation of personnel performance on at least an annual basis. There shall be evidence that this evaluation is reviewed with the employee and that the employee is given the opportunity to respond to this evaluation.

e. There shall be a personnel record kept on each staff member. These records shall contain as applicable:

(1) Verification of training, experience, and all professional credentials relevant to the position;

(2) Job performance evaluations;

(3) Incident reports;

(4) Disciplinary actions taken; and

(5) Documentation of review and adherence to confidentiality laws and regulations. This review and agreement shall occur prior to assumption of duties.

f. There shall be written policies and procedures designed to ensure confidentiality of personnel records and a delineation of authorized personnel who have access to various types of personnel information.

155.25(10) *Professional qualifications.*

a. Personnel conducting screenings, placements, and assessments in accordance with this chapter shall meet the requirements of 155.21(8)*"i."*

b. The sole practitioner shall subscribe to a code of conduct found in professional certification or licensure as specified in 155.21(8).

155.25(11) *Child abuse/dependent adult abuse/criminal history background check.*

a. Written policies and procedures shall prohibit mistreatment, neglect, or abuse of children and dependent adults and shall specify reporting and enforcement procedures for the program. Alleged violations shall be reported immediately to the director of the facility and appropriate department of human services personnel. Written policies and procedures on reporting alleged violations regarding substance abuse client/patients shall be in compliance with HIPAA and DHHS, 42 CFR Part 2, regulations on Confidentiality of Alcohol and Drug Abuse Patient Records. Any employee found to be in violation of Iowa Code sections 232.67 through 232.70, as substantiated by a department of human services' investigation shall be subject to the program's policies concerning dismissal.

b. For each employee working within a juvenile services area as set forth in Iowa Code section 125.14A or with dependent adults as set forth in Iowa Code chapter 235B, the following, at a minimum, shall be documented:

(1) Documentation of a criminal history background check with the Iowa division of criminal investigation on all new applicants for employment. The background check shall include asking whether the applicant has been convicted of a crime.

(2) A written, signed, and dated statement furnished by a new applicant for employment which discloses any substantiated reports of child abuse, neglect, or sexual abuse or dependent adult abuse.

(3) Documentation of a check after hiring on probationary or temporary status, but prior to permanently employing the individual, with the Iowa central registry for any substantiated reports of child abuse, neglect, or sexual abuse pursuant to Iowa Code section 125.14A or substantiated reports of dependent adult abuse for all employees hired on or after July 1, 1994, pursuant to Iowa Code chapter 235B.

(4) A person who has a record of a criminal conviction or founded child abuse report or founded dependent adult abuse report shall not be employed, unless an evaluation of the crime or founded child abuse or founded dependent adult abuse has been made by the department of human services which concludes that the crime or founded child abuse or founded dependent adult abuse does not

merit prohibition of employment. If a record of criminal conviction or founded child abuse or founded dependent adult abuse exists, the person shall be offered the opportunity to complete and submit Form 470-2310, Record Check Evaluation. In its evaluation, the department of human services shall consider the nature and seriousness of the crime or founded abuse in relation to the position sought, the time elapsed since the commission of the crime or founded abuse, the circumstances under which the crime or founded abuse was committed, the degree of rehabilitation, and the number of crimes or founded abuses committed by the person involved.

c. Each treatment staff member shall complete two hours of training relating to the identification and reporting of child abuse and dependent adult abuse within six months of initial employment, and at least two hours of additional training every five years thereafter.

155.25(12) *Client/patient case record maintenance.* There shall be written policies and procedures governing the compilation, storage and dissemination of individual client/patient case records.

a. These policies and procedures shall ensure that:

(1) The program exercises its responsibility for safeguarding and protecting the client/patient case record against loss, tampering, or unauthorized disclosure of information;

(2) Content and format of client/patient records are kept uniform; and

(3) Entries in the client/patient case record are signed and dated.

b. The program shall provide adequate physical facilities for the storage, processing, and handling of client/patient case records. These facilities shall include suitably locked, secured rooms or file cabinets.

c. Appropriate records shall be readily accessible to those staff members providing services directly to the client/patient and other individuals specifically authorized by program policy.

d. There shall be a written policy governing the disposal and maintenance of client/patient case records. Client/patient case records shall be maintained for not less than seven years from the date they are officially closed.

e. Each file cabinet or storage area containing client/patient case records shall be locked.

f. Policies shall be established that specify the conditions under which information on applicants or client/patients may be released and the procedures to be followed for releasing such information. All such policies and procedures shall be in accordance with HIPAA and the federal confidentiality regulations, "Confidentiality of Alcohol and Drug Abuse Patient Records," 42 CFR Part 2, effective June 9, 1987, which implement federal statutory provisions, 42 U.S.C. 290dd-3 applicable to alcohol abuse client/patient records, and 42 U.S.C. 290ee-3 applicable to drug abuse client/patient records, and state confidentiality laws and regulations.

g. Confidentiality of alcohol and drug abuse client/patient records. The confidentiality of alcohol and drug abuse client/patient records maintained by a program is protected by HIPAA and the "Confidentiality of Alcohol and Drug Abuse Patient Records" regulations, 42 CFR Part 2, effective June 9, 1987, which implement federal statutory provisions, 42 U.S.C. 290dd-3 applicable to alcohol abuse client/patient records, and 42 U.S.C. 290ee-3 applicable to drug abuse client/patient records.

h. Confidentiality and transfer of records. Upon receipt of a properly executed written release of information signed by the client/patient, the program shall release client/patient records in a timely manner. A program shall not refuse to transfer or release client/patient records related to continuation of care solely because payment has not been received. A program may refuse to release client/patient records which are unrelated to continuation of care if payment has not been received. A program may refuse to file the reporting form required by 641—subrule 157.3(1), "Notice Iowa Code 321J—Confidential Medical Record," reporting screening, evaluation, and treatment completion, if payment has not been received for such services.

155.25(13) *Placement screening, evaluation and assessment.* There shall be clearly stated written criteria for determining the eligibility of individuals for placement screening evaluation and assessment.

a. The program shall have written policies and procedures governing a uniform process that defines:

(1) Procedures to be followed when accepting referrals from outside agencies or organizations;

(2) The types of records to be kept on all individuals applying for services.

b. The program shall conduct a screening, which shall include evaluation of the ASAM-PPC-2 for determining the recommendation of individuals for placement into a level of care.

c. At the time of screening, documentation shall be made that the individual has been informed of:

(1) Evaluation costs to be borne by the client/patient, if any;

(2) Client/patient's rights and responsibilities; and

(3) Confidentiality laws, rules and regulations.

d. Sufficient information shall be collected during the screening and evaluation process so that a recommendation can be made for placement into a level of care.

e. The results of the screening and evaluation process shall be clearly explained to the client/patient and to the client/patient's family when appropriate. This shall be documented in the client/patient record.

f. Programs conducting screenings and evaluations on persons convicted of operating a motor vehicle while intoxicated (OWI), Iowa Code section 321J.2, and persons whose driver's license or nonresident operating privileges are revoked under chapter 321J, shall do so in accord with and adhere to 641—Chapter 157.

155.25(14) *Client/patient case record contents.* There shall be a case record for each client/patient that contains:

a. Results of all examinations, tests, and screening and admissions information;

b. Reports from referring sources when applicable;

c. Reports from outside resources shall be dated and include the name of the resource;

d. Multidisciplinary case conference and consultation notes, including the date of the conference or consultation, recommendations made, actions taken, and individuals involved when applicable;

e. Correspondence related to the client/patient, including all letters and dated notations of telephone conversations relevant to the client/patient's treatment;

f. Information release forms;

g. Records of services provided; and

h. Management information system or other appropriate data forms.

155.25(15) *Emergency medical services.* The program shall ensure that emergency medical services are available through an affiliation agreement or contract or policy and procedure.

155.25(16) *Management of care.* The program shall ensure appropriate level of care utilization by implementing and maintaining the written placement screening.

155.25(17) *Building construction and safety.* All buildings in which client/patients receive treatment shall be designed, constructed, equipped, and maintained in a manner that provides for the physical safety of client/patients, personnel, and visitors.

a. All programs shall have written policies and procedures to provide a safe environment for client/patients, personnel and visitors. The program shall have written policies and procedures for the maintenance, supervision, and safe use of all its grounds and equipment.

b. Safety education shall include orientation of new employees to general facilitywide safety practices.

155.25(18) *Outpatient facility.* The outpatient facility shall be safe, clean, well-ventilated, properly heated and in good repair.

a. The facility shall be appropriate for providing services available from the program and for protecting client/patient confidentiality.

b. Furniture shall be clean and in good repair.

c. There shall be a written plan outlining procedures to be followed in the event of fire and tornado. This plan shall be conspicuously displayed at the facility.

d. All services shall be accessible to people with disabilities, or the program shall have written policies and procedures that describe how people with disabilities can gain access to the facility for necessary services.

e. The program shall ensure confidentiality of client/patients receiving services.

f. Smoking shall be prohibited.

155.25(19) *Client/patient rights.* The program shall maintain written policies and procedures that ensure that the legal and human rights of client/patients participating in the program are observed and protected.

a. There shall be procedures to inform all client/patients of their legal and human rights at the time of evaluation.

b. There shall be documentation of the implementation of these procedures.

c. There shall be written policies and procedures for:

(1) Client/patient communications, e.g., opinions, recommendations;

(2) Client/patient grievances, with a mechanism for redress;

(3) Prohibition of sexual harassment; and

(4) Implementation of the Americans with Disabilities Act.

d. There shall be procedures designed to protect client/patients' rights and privacy.

155.25(20) *Administrative and procedural standards.* The program shall comply with the following rules:

a. 641—155.2(125,135) Licensing.

b. 641—155.3(125,135) Type of licenses.

c. 641—155.4(125,135) Nonassignability.

d. 641—155.5(125,135) Application procedures.

e. 641—155.6(125,135) Application review.

f. 641—155.7(125,135) Inspection of licensees.

g. 641—155.8(125,135) Licenses—renewal.

h. 641—155.9(125,135) Corrective action plan.

i. 641—155.10(125,135) Grounds for denial of initial license.

j. 641—155.11(125,135) Suspension, revocation, or refusal to renew a license.

k. 641—155.12(125,135) Contested case hearing.

l. 641—155.13(125,135) Rehearing application.

m. 641—155.14(125,135) Judicial review.

n. 641—155.15(125,135) Reissuance or reinstatement.

o. 641—155.16(125,135) Complaints.

p. 641—155.17 Reserved.

q. 641—155.18(125,135) Deemed status.

r. 641—155.19(125,135) Funding.

s. 641—155.20(125,135) Inspection.

This rule is intended to implement Iowa Code section 125.13.

[**ARC 8792B**, IAB 6/2/10, effective 7/1/10]

641—155.26 to **155.34** Reserved.

641—155.35(125,135) Specific standards for opioid treatment programs. All programs that use methadone or other medications approved by the Food and Drug Administration under Section 505 of the Federal Food, Drug, and Cosmetic Act (21 U.S.C. 355) and the state of Iowa for use in the treatment of opioid addiction shall comply with this rule, HIPAA and Part II, Department of Health and Human Services, Substance Abuse and Mental Health Services Administration, 42 CFR Part 8, Opioid Drugs in Maintenance and Detoxification Treatment of Opiate Addiction, effective May 18, 2001.

155.35(1) *Definitions.*

"Accredited opioid treatment program" means an opioid treatment program that is the subject of a current, valid accreditation from an accreditation body approved by the Substance Abuse and Mental Health Services Administration (SAMHSA).

"Certification" means the process by which SAMHSA determines that an opioid treatment program is qualified to provide opioid treatment under the federal opioid treatment standards.

"Certification application" means the application filed by an opioid treatment program for purposes of obtaining certification from SAMHSA.

"Certified opioid treatment program" means an opioid treatment program that is the subject of a current, valid certification.

"Comprehensive maintenance treatment" means maintenance treatment provided in conjunction with a comprehensive range of appropriate medical and rehabilitative services.

"Detoxification treatment" means the dispensing of an opioid agonist treatment medication in decreasing doses to an individual to alleviate adverse physical or psychological effects incident to withdrawal from the continuous or sustained use of an opioid drug and as a method of bringing the individual to a drug-free state within such a period.

"Interim maintenance treatment" means detoxification treatment for a period of more than 30 days but not in excess of 180 days.

"Maintenance treatment" means the dispensing of an opioid agonist treatment medication at stable dosage levels for a period in excess of 21 days in the treatment of an individual for opioid addiction.

"Medical and rehabilitative services" means services such as medical evaluations, counseling, and rehabilitative and other social programs (e.g., vocational and educational guidance, employment placement) that are intended to help patients in opioid treatment programs become or remain productive members of society.

"Medical director" means a physician who is licensed to practice medicine in accordance with Iowa Code chapter 148, 150, or 150A and who assumes responsibility for administering all medical services performed by the program, either by performing them directly or by delegating specific responsibility to authorized program physicians and health care professionals functioning under the medical director's direct supervision.

"Medication unit" means a facility established as part of, but geographically separate from, an opioid treatment program from which licensed private practitioners or community pharmacists dispense or administer opioid agonist treatment medications or collect samples for drug testing or analysis.

"Opiate addiction" means a cluster of cognitive, behavioral, and physiological symptoms in which the individual continues use of opiates despite significant opiate-induced problems. Opiate dependence is characterized by an individual's repeated self-administration of opiates that usually results in opiate tolerance, withdrawal symptoms, and compulsive drug-taking. Dependency may occur with or without the physiological symptoms of tolerance and withdrawal.

"Opioid agonist treatment medication" means any opioid agonist drug that is approved by the Food and Drug Administration under Section 505 of the Federal Food, Drug, and Cosmetic Act (21 U.S.C. 355) for use in the treatment of opiate addiction.

"Opioid drug" means any drug having an addiction-forming or addiction-sustaining liability similar to morphine or being capable of conversion into a drug having such addiction-forming or addiction-sustaining liability.

"Opioid treatment" means the dispensing of an opioid agonist treatment medication, along with a comprehensive range of medical and rehabilitative services, when clinically necessary, to an individual to alleviate the adverse medical, psychological, or physical effects incident to opiate addiction. This term encompasses detoxification treatment, short-term detoxification treatment, long-term detoxification treatment, maintenance treatment, comprehensive maintenance treatment, and interim maintenance treatment.

"Opioid treatment program" or *"OTP"* means a program or practitioner engaged in opioid treatment or interim maintenance treatment.

"Patient" or *"client/patient"* means any individual who undergoes treatment in an opioid treatment program.

"Program sponsor" means the person responsible for the operation of the opioid treatment program and who assumes responsibility for all its employees, including any practitioners, agents, or other persons providing medical, rehabilitative, or counseling services at the program or any of its medication units. The program sponsor need not be a licensed physician but shall employ a licensed physician for the position of medical director.

"Short-term detoxification treatment" means detoxification treatment for a period not in excess of 30 days.

"State authority" means the Iowa department of public health, division of behavioral health, which regulates the treatment of opiate addiction with opioid drugs.

"Treatment plan" means a plan that outlines for each patient attainable short-term treatment goals that are mutually acceptable to the patient and the opioid treatment program and that specifies the services to be provided and the frequency and schedule for their provision.

155.35(2) *Required approvals.* All opioid treatment programs shall be licensed or approved by the committee and shall maintain all other approvals required by the Drug Enforcement Administration, Substance Abuse and Mental Health Services Administration and the Iowa board of pharmacy in order to provide services.

155.35(3) *Central registry system.* To prevent simultaneous enrollment of a client/patient in more than one program, all opioid treatment programs shall participate in a central registry as established by the division.

Prior to admission of an applicant to an opioid treatment program, the program shall submit to the registry the applicant's name, birth date, and date of intended admission, and any other information required for the clearance procedure. No person shall be admitted to a program who is found by the registry to be participating in another such program. All opioid treatment programs shall report all admissions, discharges, and transfers to the registry immediately. All information reported to the registry from the programs and all information reported to the programs from the registry shall be treated as confidential in accordance with HIPAA and "Confidentiality of Alcohol and Drug Abuse Patient Records" regulations, 42 CFR Part 2, effective June 9, 1987.

a. Definitions. For purposes of this subrule:

"Central registry" means the system through which the Iowa department of public health, division of behavioral health, obtains client/patient identifying information about individuals applying for maintenance or detoxification treatment for the purpose of preventing an individual's concurrent enrollment in more than one such program.

"Opioid treatment program" means a detoxification or maintenance treatment program which is required to report client/patient identifying information to the central registry and which is located in the state.

b. Restrictions on disclosure. A program may disclose client/patient identifying information to a central registry for the purpose of preventing multiple enrollment of a client/patient only if:

(1) The disclosure is made when:

1. The client/patient is admitted for treatment; or
2. The treatment is interrupted, resumed or terminated.

(2) The disclosure is limited to:

1. Client/patient identifying information; and
2. Relevant dates of admission.

(3) The program shall inform the client/patient of the required disclosure prior to admission.

c. Use of information limited to prevention of multiple enrollments. Any information disclosed to the central registry to prevent multiple enrollments may not be redisclosed by the registry or such information used for any other purpose than the prevention of multiple enrollments unless so authorized by court order in accordance with HIPAA and 42 CFR Part 2, effective June 9, 1987.

d. Permitted disclosure by the central registry to prevent a multiple enrollment. If a program petitions the central registry, and an identified client/patient is enrolled in another program, the registry may disclose:

(1) The name, address, and telephone number of the program in which the client/patient is currently enrolled to the inquiring program; and

(2) The name, address, and telephone number of the inquiring program to the program in which the client/patient is currently enrolled. The programs may communicate as necessary to verify that no error has been made and to prevent or eliminate any multiple enrollment.

155.35(4) *Admission requirements.*

a. Prior to or at the time of a client/patient's admission to an opioid treatment program, the program shall conduct a comprehensive assessment so as to determine appropriateness for admission.

b. The program shall verify, to the extent possible, the client/patient's name, address, and date of birth.

c. The program physician shall determine and document in the client/patient's record that the client/patient is physiologically dependent on narcotic substances and has been so dependent for at least one year prior to admission. A one-year history of addiction means that the client/patient was physiologically dependent on a narcotic at a time one year before admission to a program and was addicted for most of the year preceding admission.

(1) When physiological addiction cannot be clearly documented, the program physician or an appropriately trained staff member designated and supervised by the physician shall record in the client/patient's record the criteria used to determine the client/patient's current physiologic dependence and history of addiction. In the latter circumstance, the program physician shall review, date, and countersign the supervised staff member's evaluation to demonstrate the physician's agreement with the evaluation. The program physician shall make the final determination concerning a client/patient's physiologic dependence and history of addiction. The program physician also shall sign, date, and record a statement that the physician has reviewed all the documented evidence to support a one-year history of addiction and the current physiologic dependence and that in the physician's reasonable clinical judgment the client/patient fulfills the requirements for admission to maintenance treatment. Before the program administers any medication to the client/patient, the program physician shall complete and record the statement documenting addiction and current physiologic dependence.

(2) When a client/patient has voluntarily left an opioid treatment program in good standing and seeks readmission within two years of discharge, the program shall document the following information:

1. Prior opioid treatment of six months or more; and

2. The program physician shall enter in the client/patient's record that in the physician's medical judgment treatment is warranted.

d. The program shall collect a drug screening sample for analysis. Where dependence is substantially verified through other indicators, a negative drug screen will not necessarily preclude admission to the program.

e. Prior to admission, the program shall confirm with the central registry that the client/patient is not currently enrolled in another opioid treatment program.

f. If a potential client/patient has previously been enrolled in another program, the admitting program shall request from the previous program a copy of the client/patient's assessment data, treatment plan, and discharge summary including the type of or reason for discharge. All programs subject to these rules shall promptly respond to such a request upon receipt of a valid release of information.

g. A person under the age of 18 is required to have had two documented attempts at short-term detoxification or drug-free treatment to be eligible for maintenance treatment. A one-week waiting period is required after such a detoxification attempt, however, before an attempt is repeated. The program physician shall document in the client/patient's record that the client/patient continues to be, or is again, physiologically dependent on narcotic drugs.

h. Program staff shall ensure that a client/patient is voluntarily participating in the program, and the client/patient shall sign a Consent to Treatment Form.

i. Pregnant client/patients may be admitted to opioid treatment with the following provisions:

(1) Evidence of current physiological dependency is not needed if the program physician certifies the pregnancy and, in the physician's reasonable judgment, finds treatment to be justified. Documentation of all findings and justifications for admission shall be documented in the client/patient's record by the program physician prior to the initial dose of methadone.

(2) Pregnant client/patients shall be offered comprehensive prenatal care. If the program cannot provide prenatal services, the program shall assist the client/patient in obtaining such services and shall coordinate ongoing care with the collateral provider.

(3) The program physician shall document that the client/patient has been informed of the possible risks to the unborn child from the use of medication and the risks of continued use of illicit substances.

(4) Should a program have a waiting list for admission to the program, pregnant client/patients shall be given priority.

155.35(5) *Placement, admission and assessment.* The program shall have written criteria for considering an individual for placement and admission. In addition, the program shall maintain current procedures to ensure that patients are admitted to maintenance treatment by qualified staff who have determined by using accepted medical criteria such as those outlined in the Diagnostic and Statistical Manual for Mental Disorders (DSM IV) that the person is currently addicted to an opioid drug.

a. The program shall have written policies and procedures governing a uniform process that defines:

(1) The types of information to be gathered on all individuals upon admission;

(2) Procedures to be followed when accepting referrals from outside agencies or organizations;

(3) The types of records to be kept on all individuals applying for services.

b. The client/patient assessment (psychosocial history) shall be an analysis and synthesis of the client/patient's status, and shall address the client/patient's strengths, problems, and areas of clinical concern.

It shall be developed within the period of time between admission and the first review date specified for that particular level of care within the continued stay review process. This initial assessment upon admission to treatment services is an expansion of information on the six categories contained within the placement screening document.

c. When an individual refuses to divulge information or to follow the recommended course of treatment, this refusal shall be noted in the case record.

d. At the time of admission, documentation shall be made that the individual has been informed of:

(1) General nature and goals of the program;

(2) Rules governing client/patient conduct and infractions that can lead to disciplinary action or discharge from the program;

(3) The hours during which the services are available;

(4) Treatment costs, if any, to be borne by the client/patient;

(5) Client/patient rights and responsibilities;

(6) Confidentiality laws, rules and regulations; and

(7) Information on preventing exposure to and transmission of human immunodeficiency virus.

e. Sufficient information shall be collected during the admission process so that the assessment process allows for the development of a complete assessment of the client/patient's status and a comprehensive plan of treatment can be developed.

f. The results of the screening and admission process shall be clearly explained to the client/patient, and to the client/patient's family when appropriate. This shall be documented in the client/patient record.

g. The program physician or designee, who is a qualified medical professional, shall complete a medical evaluation and a current psychological/mental status evaluation of the client/patient prior to the administration of the initial dose of medication. If the history and current psychological/mental status evaluation is completed by an individual other than the program physician, the program shall document in the client/patient's case record that this information was reviewed by the program physician prior to the initial dosage of medication. The medical evaluation shall include but not be limited to:

(1) A complete medical history;

(2) An assessment of the client/patient's current psychological and mental status;

(3) A physical examination including examination for:

1. Pulmonary, liver, or cardiac abnormalities;
2. Infectious disease; and
3. Dermatologic sequela of addiction.

(4) Laboratory tests including:

1. Serological test for syphilis; and
2. Urine screening for drugs.

(5) Intradermal PPD (tuberculosis skin test) and review of tetanus immunization status; and

(6) When indicated, an EKG, chest X-ray, pap smear, pregnancy test, sickle cell screening, complete blood count and white cell differential, multiphasic chemistry profile, routine and microscopic urinalysis, or other tests indicated by the client/patient's condition.

155.35(6) *Treatment plans.* Based upon the initial assessment, an individualized written treatment plan shall be developed and recorded in the client/patient's case record.

a. A treatment plan shall be developed and shall delineate the client/patient's immediate needs and actions required to meet these needs.

b. The treatment plan shall be developed as soon after the client/patient's admission as is clinically feasible, but no later than 30 days following admission to an outpatient opioid maintenance treatment program.

c. The individualized treatment plan shall minimally contain:

(1) A clear and concise statement of client/patient's current strengths and needs;

(2) Clear and concise statements of the short- and long-term goals the client/patient will be attempting to achieve;

(3) Type and frequency of therapeutic activities in which the client/patient will be participating;

(4) The staff person(s) to be responsible for the client/patient's treatment; and

(5) The specific criteria to be met for successful completion of treatment.

d. Treatment plans shall be developed in partnership with the client/patient. Comprehensive treatment plans shall be reviewed by the primary counselor and the client/patient as often as necessary, but no less than every 90 days during the first year and semiannually each subsequent year for opioid treatment modalities. Treatment plans shall be reviewed by the program physician on an annual basis.

e. The reviews shall consist of a reassessment of the client/patient's current status to include accomplishments and needs and a redefining of treatment goals when appropriate. The date of the review and any change, as well as the individuals involved in the review, shall also be recorded.

f. The use of abstract terms, jargon, or slang should be avoided in the treatment plan, and the plan should be written in a manner readily understandable to the average client/patient. The program shall provide the client/patient with copies of all treatment plans upon request.

g. Treatment plans shall be culturally and environmentally specific so as to meet the needs of the client/patient. Treatment plans shall be written in a manner readily understandable to the average person or with assistance available to illiterate, handicapped, or mentally impaired client/patients.

155.35(7) *Progress notes.* A client/patient's progress and current status in meeting the goals set in the treatment plan, as well as efforts by staff members to help the client/patient achieve these stated goals, shall be recorded in the client/patient's case record. Such information will be noted following each individual counseling session. Group therapy progress notes shall be recorded following each session or summarized at least weekly.

a. Entries shall be filed in chronological order and shall include the date services were provided or observations made, the date the entry was made, the signature or initials and staff title of the individual rendering the services. All progress notes shall be entered into the client/patient case record in permanent pen, typewriter, or by computer.

b. All entries that involve subjective interpretations of a client/patient's progress should be supplemented with a description of the actual behavioral observations which were the basis for the interpretation.

c. The use of abstract terms, jargon, or slang should be avoided in progress notes.

d. If a client/patient is receiving services from an outside resource, the program shall attempt to secure a written copy of status reports and other client/patient records from that resource.

e. The program shall develop a uniform progress notes format to be used by all clinical staff.

155.35(8) *Rehabilitative services.* The program shall have policies and procedures on the minimum attendance for rehabilitative services relative to the client/patient's progress and length of involvement in treatment. The minimum frequency of rehabilitative services shall occur at the same frequency of on-site dosing for client/patients receiving more than two take-home dosages a week in the first year. The minimum frequency for rehabilitative services for client/patients receiving two or fewer take-home dosages shall be weekly. The program shall provide rehabilitative services that are appropriate for

the client/patient based on needs identified during the assessment process. The program may provide rehabilitative services through collateral agreements with other service providers. A client/patient who does not comply with the program's rehabilitative service requirements shall be placed on a period of probation as defined by the program, or be required to immediately increase the frequency of clinic attendance for medication and rehabilitative services. If, during a period of probation, the client/patient continues to be in noncompliance with rehabilitation services, the program shall continue to increase the attendance requirement until daily attendance is obtained or the client/patient complies with rehabilitative services. This requirement shall not preclude the program's ability to determine that discharge of a client/patient is warranted for therapeutic reasons or program needs.

155.35(9) *Medication dispensing.*

a. The program physician shall determine the client/patient's initial and subsequent dose of medication and clinic dosing schedule and shall assume responsibility for the amount of the narcotic drug administered or dispensed and shall record, date, and sign in each client/patient's case record each change in the dosage schedule. The physician shall directly communicate orders to the pharmacy or registered or licensed personnel supervising medication dispensing. The program physician may communicate such orders verbally; however, orders shall be reduced in writing and countersigned within 72 hours by the program physician.

b. The initial dose of medication shall not exceed 30 milligrams, and the total dose for the first day shall not exceed 40 milligrams, unless the program physician documents in the client/patient's case record that 40 milligrams did not suppress opiate abstinence symptoms. A client/patient transferring into the program or on a guest-dosing status may receive an initial dosage of no more than the last daily dosage authorized by the former or primary program.

(1) Medication shall be administered by a professional authorized by law.

(2) No medication shall be administered unless the client/patient has completed admission procedures, unless the client/patient enters the program on a weekend and the central registry cannot be contacted. If, in the clinical judgment of the program physician, a client/patient is experiencing an emergency situation, the admission procedures may be completed on the following workday.

c. Administration.

(1) Take-home medication shall be labeled in accordance with state and federal law and have childproof caps.

(2) A dispensing log shall be kept in the dispensing area and in the client/patient case records which shall document the amount of medication dispensed and include the signature of the staff member authorized to dispense the medication. No dose shall be dispensed until the client/patient has been positively identified and the dosage amount is compared with the currently ordered and documented dosage level.

(3) Ingestion shall be observed and verified by the staff person authorized to dispense the medication.

(4) The program physician shall record, date, and sign in each client/patient's case record each change in the dosage schedule. Daily dosages of medications in excess of 100 milligrams shall be dispensed only with the approval of the program physician and shall be documented and justified in the client/patient's case record.

155.35(10) *Take-home or unsupervised medication use.*

a. Take-home medication may be given to client/patients who demonstrate a need for a more flexible schedule in order to enhance and continue rehabilitative progress. For client/patients receiving take-home medication, the program shall document the following requirements:

(1) Absence of recent abuse of drugs (narcotic or nonnarcotic), including alcohol;

(2) Regular attendance at the clinic;

(3) Attendance at a licensed or approved treatment program for rehabilitative services (e.g., programs are considered approved when licensed or approved in accordance with Iowa Code chapter 125);

(4) Absence of recent criminal activity;

(5) Stable home environment and social relationships;

(6) Active employment or participation in school, or similar responsible activities related to employment, education or vocation; and

(7) Assurance that medication can be safely transported and stored by the client/patient for the client/patient's own use.

b. Prior to granting take-home privileges, the program physician shall document in the client/patient's case record that all the above criteria have been considered and that, in the physician's professional judgment, the risk of diversion or abuse is outweighed by the rehabilitative benefits to be derived.

c. If the client/patient meets the above criteria, the client/patient may receive take-home medication according to the following guidelines:

(1) During the first 90 days of treatment, the take-home supply is limited to a single dose each week;

(2) During the second 90 days of treatment, the take-home supply is limited to two doses per week;

(3) In the remaining months of the first year, a patient may be given a maximum six-day supply of take-home medication;

(4) After one year of continuous treatment, a patient may be given a maximum two-week supply of take-home medication;

(5) After two years of continuous treatment, a patient may be given a maximum one-month supply of take-home medication; and

(6) Take-home medication shall not be dispensed to patients in interim maintenance treatment or detoxification.

d. If a client/patient is unable to conform to the applicable mandatory schedule, a revised schedule may be permitted provided the program receives an exception to these rules from the division and SAMHSA, when applicable. A copy of the written exception shall be placed in the client/patient's case record. The division will consider exceptions only in unusual circumstances. When a program is applying for less frequent pickups for client/patients, approval will be based on considerations in addition to distance when another program exists within 25 miles of the client/patient's residence.

e. Should a patient receiving take-home medication provide a drug screen that is confirmed either positive for substances or negative for the prescribed medication, the program shall ensure that when test results are used, presumptive laboratory results are distinguished from results that are definitive.

(1) The program physician shall place the client/patient on three months' probation, as defined by the program, or increase the client/patient's frequency of clinic dosing after considering the client/patient's overall progress and length of involvement in the program.

(2) Should the client/patient provide a drug screen that is positive for substances or negative for medication during a period of probation, the program physician shall increase the client/patient's frequency of clinic attendance for dosage pickup for at least three months. If after the three-month period the client/patient meets the eligibility criteria, the client/patient may return to the previous take-home schedule.

f. Take-home or unsupervised dosages of medication in excess of 100 milligrams may be dispensed by the program physician when the need for those dosages is carefully reviewed and considered and justified in the client/patient's case record based on the physician's clinical judgment.

155.35(11) *Drug testing.* Each program shall establish policies and procedures for the collection of drug-screening specimens and utilization of results.

a. The program shall ensure that an initial drug-screening test or analysis is completed for each prospective client/patient and that at least eight additional random tests or analyses are performed on each client/patient during the first year in maintenance treatment and that at least quarterly random tests or analyses are performed on each client/patient in maintenance treatment for each subsequent year. When a sample is collected from each client/patient for such a test or analysis, it shall be done in a manner that minimizes opportunity for falsification. Each test or analysis shall be analyzed for opiates, methadone, amphetamines, cocaine, and barbiturates. In addition, if any other drug or drugs have been determined by a program to be abused in that program's locality, or as otherwise indicated, each test or analysis must be analyzed for any of those drugs as well. Any laboratory that performs the testing required under this

rule shall be in compliance with all applicable federal proficiency testing and licensing standards and all applicable state standards.

b. The program shall ensure that test results are not used as the sole criterion to force a client/patient out of treatment but are used as a guide to change treatment approaches. The program shall also ensure that when test results are used, presumptive laboratory results are distinguished from results that are definitive.

155.35(12) *Client/patient case records.* The program shall have written policies and procedures governing the compilation, storage and dissemination of individual client/patient case records.

a. These policies and procedures shall ensure that:

(1) The program exercises its responsibility for safeguarding and protecting the client/patient case records against loss, tampering, or unauthorized disclosure of information;

(2) Content and format of client/patient case records are kept uniform; and

(3) Entries in the client/patient case record are signed and dated.

b. The program shall provide adequate physical facilities for the storage, processing, and handling of client/patient case records. These facilities shall include suitably locked, secured rooms or file cabinets.

c. Appropriate records shall be readily accessible to those staff members providing services directly to the client/patient and other individuals specifically authorized by program policy. Records should be kept in proximity to the area in which the client/patient normally receives services.

d. The program shall have a written policy governing the disposal and maintenance of client/patient case records. Client/patient case records shall be maintained for not less than seven years from the date they are officially closed.

e. Confidentiality of alcohol and drug abuse client/patient case records. The confidentiality of alcohol and drug abuse client/patient case records maintained by a program is protected by HIPAA and the "Confidentiality of Alcohol and Drug Abuse Patient Records" regulations, 42 CFR Part 2, effective June 9, 1987, which implement federal statutory provisions, 42 U.S.C. 290dd-3 applicable to alcohol abuse client/patient records, and 42 U.S.C. 290ee-3 applicable to drug abuse client/patient records. The program is precluded from identifying that a client/patient attends the program or disclosing any information identifying a client/patient as an alcohol or drug abuser unless:

(1) The client/patient consents in writing;

(2) The disclosure is allowed by a court order;

(3) The disclosure is made to medical personnel in a medical emergency; or

(4) The disclosure is required by law.

f. Confidentiality and transfer of records. Upon receipt of a properly executed written release of information signed by the client/patient, the program shall release client/patient records in a timely manner. A program shall not refuse to transfer or release client/patient records related to continuation of care solely because payment has not been received. A program may refuse to release client/patient records which are unrelated to continuation of care if payment has not been received. A program may refuse to file the reporting form required by 641—subrule 157.3(1), "Notice Iowa Code 321J—Confidential Medical Record," reporting screening, evaluation, and treatment completion, if payment has not been received for such services.

155.35(13) *Diversion prevention plan.*

a. The program shall develop a diversion identification and prevention plan that:

(1) Outlines methods by which the program shall detect possible diversion of take-home medication; and

(2) Actions to be taken when diversion is identified or suspected.

b. The program shall establish and implement proactive procedures to reduce the likelihood or possibility of diversion.

155.35(14) *Quality improvement.* The program shall have an ongoing quality improvement process designed to objectively and systematically monitor and evaluate the quality and appropriateness of client/patient care, pursue opportunities to improve client/patient care, and resolve identified

problems. Quality improvement efforts shall be facilitywide in scope and include review of clinical and professional services.

a. The program shall have a written plan for a quality improvement process. The written plan shall describe the objectives, organization, scope, and mechanisms for overseeing the effectiveness of monitoring, evaluation, and problem-solving activities.

b. The program shall establish written policies and procedures to describe and document the quality improvement process, including the monitoring and evaluation activities of the program. The policies and procedures shall ensure that:

(1) Information is collected or screened by a designated individual, individuals, or committee. Quality improvement activities may be contracted through all outside resources;

(2) Objective criteria are utilized in the development and application of criteria relating to the care or service the program provides; and

(3) Objective criteria are utilized in the evaluation of the information collected in order to identify important problems in, or opportunities to improve, client/patient care and clinical performance.

c. The program shall document that the quality of client/patient care is improved and identified problems are resolved through appropriate actions taken by the program's administrative and supervisory staff and through professional staff functions.

d. Necessary information shall be communicated among program components, modalities, or services when problems or opportunities to improve client/patient care involve more than one program component or service.

e. The program shall ensure that the status of identified problems is tracked to ensure improvement or resolution.

f. The program shall ensure that information from program components or services and the findings of discrete quality improvement activities are used to detect trends, patterns of performance, and potential problems that affect more than one program component or service.

g. The objectives, scope, organization, and effectiveness of the quality improvement process are evaluated at least annually and revised as necessary.

155.35(15) *Interim maintenance treatment.*

a. An approved program may offer interim maintenance treatment when, due to capacity, the program cannot place the client/patient in a program offering comprehensive services within 14 days of the client/patient's application for admission.

b. An approved program may provide interim maintenance treatment only if the program also provides comprehensive maintenance treatment to which interim maintenance treatment client/patients may be transferred.

c. Interim maintenance treatment program approval. Before a public or nonprofit private narcotic treatment program may provide interim maintenance treatment, the program must receive approval of both the U.S. Food and Drug Administration and the division of behavioral health and:

(1) The program director must certify that the program seeking such authorization is unable to place client/patients in a public or private nonprofit program within a reasonable geographic area within 14 days of the client/patient's application for admission; and

(2) That interim maintenance treatment will not reduce the capacity of the program's comprehensive maintenance treatment.

(3) Client/patients admitted to interim maintenance treatment shall be transferred to comprehensive maintenance treatment within 120 days of admission.

d. Minimum standards for interim maintenance treatment. The program may admit a client/patient who is eligible for comprehensive maintenance treatment to interim maintenance treatment if the client/patient cannot be placed in a public or private nonprofit comprehensive program within a reasonable geographic area and within 14 days of application for services. An initial drug screen, and at least two others, shall be taken from the client/patient during the maximum admission period of 120 days. A program shall establish and follow reasonable criteria for determining the transfer of client/patients to comprehensive maintenance treatment. These transfer criteria shall be in writing, available for inspection, and shall include at a minimum a preference for the transfer of

pregnant client/patients. Interim maintenance shall be conducted in accordance with all applicable federal regulations and state rules. The program shall notify the division when a client/patient begins interim treatment; when a client/patient leaves interim treatment, and when a client/patient transfers to comprehensive maintenance treatment. Such notifications shall be documented by the program in the client/patient's case record. All requirements for comprehensive maintenance treatment apply to interim maintenance treatment with the following exceptions:

(1) The medication is required to be administered daily under observation;

(2) Take-home medication is not allowed;

(3) Initial and comprehensive treatment plans are not required;

(4) A primary counselor is not required to be assigned to the client/patient; and

(5) Interim maintenance cannot be provided for longer than 120 days in any 12-month period.

155.35(16) *Complaints, investigations, suspension and revocation.* The rules relating to complaints, investigations, suspension and revocation as outlined in 641—155.11(125,135) through 641—155.16(125,135) shall apply to opioid treatment programs.

155.35(17) *Deemed status.* The committee shall grant deemed status to programs accredited either by a recognized national or not-for-profit accreditation body when the committee determines that the accreditation is for the same services.

a. National accreditation bodies. The national accreditation bodies currently recognized as meeting committee criteria for possible deemed status are:

(1) Joint Commission.

(2) Council on Accreditation of Rehabilitation Facilities (CARF).

(3) Council on Accreditation of Children and Family Services (COA).

(4) American Osteopathic Association (AOA).

b. Credentials and expectations of accreditation bodies.

(1) The accreditation credentials of the bodies shall specify the types of organizations, programs, and services the bodies accredit and targeted population groups, if appropriate.

(2) Deemed status means that the committee and division shall recognize, in lieu of their own review, an outside body's review, assessment and accreditation of a hospital-based or freestanding community-based substance abuse program's operations, functioning, and services that correspond to those described in this chapter.

c. Responsibilities of programs granted deemed status.

(1) When a program receives accreditation and is then granted licensure through deemed status, the program shall continue to be responsible for meeting all requirements in accordance with this chapter and all applicable laws and regulations.

(2) If a program that is nationally accredited requests deemed status for services not covered by the national accreditation body's standards, but covered by this chapter, the licensing for those services shall be conducted by the division.

(3) Copies of the entire CARF, Joint Commission, COA or AOA behavioral health accreditation survey/inspection report and certificate of accreditation shall be submitted to the division with the application for deemed status provided by the division.

(4) The program shall submit to the division accreditation corrective plans or written conditions to accreditation.

(5) The program shall be currently accredited by a committee-approved national accreditation body for services that are outlined in this chapter.

(6) The program shall advise the division of any changes in the program's accreditation status, address, executive director/CEO, facility locations, or any other changes to the program/organization within 30 days of such changes.

(7) All survey reports for the hospital-based or freestanding community-based substance abuse treatment program from the accrediting or licensing body shall be sent to the division.

(8) For a program granted deemed status, the period of deemed status shall coincide with the period of time that program is awarded accreditation by the national accreditation body. However, under no circumstances shall it be longer than three years.

d. The committee and division shall retain the following responsibilities and rights when deemed status is granted to program/organizations:

(1) The division may conduct focused or general on-site follow-up visits as determined appropriate.

(2) The division shall investigate all complaints that are under the authority of this chapter and recommend and require corrective action or other sanctions in accordance with 641—155.16(125,135). All complaints, findings and required corrective action may be reported to the accreditation body.

(3) The committee shall review and act upon deemed status if necessary when complaints have been founded, when national accreditation bodies find instances of noncompliance with accreditation, when the accreditation status of the program expires without renewal, when the program's accreditation status is downgraded or withdrawn by the accreditation body, or when focused reviews find instances of noncompliance.

e. Continuation of deemed status. The program shall submit a copy of all CARF, Joint Commission, COA or AOA behavioral health accreditation survey reports to the division.

155.35(18) *Personnel qualifications.*

a. Personnel providing screening, evaluations, assessments or treatment in accordance with this chapter shall meet the requirements of 155.21(8)*"i."*

b. Personnel in opioid treatment programs shall subscribe to a code of conduct found in professional certification or licensure as specified in 155.21(8).

[**ARC 8792B**, IAB 6/2/10, effective 7/1/10; **ARC 9534B**, IAB 6/1/11, effective 7/6/11]

TUBERCULOSIS (TB) SCREENING:
HEALTH CARE WORKERS AND RESIDENTS

641—155.36(125,135) Purpose. The purpose of these rules is to outline procedures for conducting tuberculosis (TB) screening for health care workers and residents at substance abuse and problem gambling treatment program facilities. Facilities will need to conduct a risk assessment to determine the risk classification of the facility and to identify appropriate screening criteria. The screening criteria are consistent with those of the U.S. Centers for Disease Control and Prevention (CDC), TB Elimination Division, as outlined in the MMWR December 30, 2005/Vol. 54/No. RR-17, "Guidelines for Preventing the Transmission of *Mycobacterium tuberculosis* in Health-Care Settings, 2005."

[**ARC 0365C**, IAB 10/3/12, effective 11/7/12]

641—155.37(125,135) Definitions. For the purpose of these rules, the following definitions shall apply:

"Bacille Calmette-Guerin (BCG) vaccination" means a vaccine for TB. BCG is used in many countries with a high prevalence of TB to prevent childhood tuberculosis meningitis and military disease. BCG is not generally recommended for use in the United States because of the low risk of infection with *Mycobacterium tuberculosis*, the variable effectiveness of the vaccine against adult pulmonary TB, and the vaccine's potential interference with tuberculin skin test reactivity.

"Baseline TB screening" means the screening of staff and residents for latent tuberculosis infection (LTBI) and TB disease at the beginning of employment or upon admission to a facility. Baseline TB screening includes a symptom screen for all staff and residents, and tuberculin skin tests (TSTs) or interferon-gamma release assay (IGRA) for *Mycobacterium tuberculosis* for those staff and residents with previous negative test results for *M. tuberculosis* infection.

"Baseline TST" or *"baseline IGRA"* means the TST or IGRA, respectively, that is administered at the beginning of employment to newly hired staff or upon admission to residents of facilities.

"Boosting" means a phenomenon in which a person has a negative TST (i.e., false-negative) result years after infection with *M. tuberculosis* and then a positive subsequent TST result. The positive TST result is caused by a boosted immune response of previous sensitivity rather than by a new infection (false-positive TST conversion). Two-step testing reduces the likelihood of mistaking a boosted reaction for a new infection.

"Extrapulmonary TB" means TB disease in any part of the body other than the lungs (e.g., kidney, spine, or lymph nodes).

"Interferon-gamma release assay" or *"IGRA"* means a whole-blood test that can aid in diagnosing *Mycobacterium tuberculosis* infection.

"Laryngeal TB" means a form of TB disease that involves the larynx and may be highly infectious.

"Latent TB infection" or *"LTBI"* means infection with *M. tuberculosis* without symptoms or signs of disease having manifested.

"Mantoux method" means a skin test performed by intradermally injecting 0.1 mL of purified protein derivative (PPD) tuberculin solution into the volar or dorsal surface of the forearm.

"Pulmonary TB" means TB disease that occurs in the lung parenchyma, usually producing a cough that lasts greater than three weeks. Pulmonary TB is usually infectious.

"Purified protein derivative (PPD) tuberculin" means a material used in diagnostic tests for detecting infection with *M. tuberculosis*.

"Risk classification" means the category the infection control team, or designated other, determines that the setting's TB risk classification is based, as a result of the TB risk assessment.

"Serial screening" refers to TB screening performed at regular intervals following baseline TB screening. Serial TB screening, also called annual or ongoing TB testing, consists of two components: (1) assessing for current symptoms of active TB disease, and (2) testing for the presence of infection with *M. tuberculosis* by administering either a TST or single IGRA.

"Symptom screen" means a procedure used during a clinical evaluation in which patients are asked if they have experienced any departure from normal in function, appearance, or sensation related to TB disease (e.g., cough).

"TB patient" means a person who had undiagnosed infectious pulmonary or laryngeal TB while in the facility during the preceding year. "TB patient" does not include persons with LTBI (treated or untreated), extrapulmonary TB disease, pulmonary, or laryngeal TB that have met criteria for noninfectiousness.

"TB risk assessment" means an initial and ongoing evaluation of the risk for transmission of *M. tuberculosis* in a particular health care setting.

"TB screening" means an administrative control measure in which evaluation for LTBI and TB disease is performed through baseline and serial screening of staff and residents of facilities.

"TB screening plan" means a plan that facilities develop and implement that comprises four major components: (1) baseline testing for *M. tuberculosis* infection, (2) serial testing for *M. tuberculosis* infection, (3) serial screening for signs or symptoms of TB disease, and (4) TB training and education.

"Treatment for LTBI" means treatment that prevents the progression of *M. tuberculosis* infection into TB disease.

"Tuberculin skin test" or *"TST"* means a diagnostic aid for finding *M. tuberculosis* infection. The Mantoux method is the recommended method to be used for the TST.

"Tuberculosis" or *"TB"* means the namesake member organism of *M. tuberculosis* complex and the most common causative infectious agent of TB disease in humans. In certain instances, the species name refers to the entire *M. tuberculosis* complex, which includes *M. bovis* and *M. african*, *M. microti*, *M. canetti*, *M. caprae*, and *M. pinnipedii*.

"Tuberculosis disease" or *"TB disease"* means a condition caused by infection with a member of the *M. tuberculosis* complex that has progressed to causing clinical (manifesting symptoms or signs) or subclinical (early stage of disease in which signs or symptoms are not present, but other indications of disease activity are present) illness.

"Two-step tuberculin skin test" or *"two-step TST"* means the procedure used for the baseline skin testing of persons who will receive serial TSTs to reduce the likelihood of mistaking a boosted reaction for a new infection.

[**ARC 0365C**, IAB 10/3/12, effective 11/7/12]

641—155.38(125,135) Tuberculosis screening of staff and residents.

155.38(1) *TB risk assessment.* Annually, each facility shall conduct a TB risk assessment to evaluate the risk for transmission of *M. tuberculosis*, regardless of whether a person with suspected or confirmed TB disease is expected to be encountered in the facility. The TB risk assessment shall be utilized to

determine the types of administrative, environmental, and respiratory protection controls needed and serves as an ongoing evaluation tool of the quality of TB infection control and for the identification of needed improvements in infection control measures. The risk assessment shall include:

a. The community rate of TB,

b. The number of persons with infectious TB encountered in the facility, and

c. The speed with which persons with infectious TB are suspected, isolated, and evaluated to determine if persons with infectious TB exposed staff or others in the facility. TB cases include persons who had undiagnosed infectious pulmonary or laryngeal TB while in the facility during the preceding year. This does not include persons with LTBI (treated or untreated), persons with extrapulmonary TB disease, or persons with pulmonary and laryngeal TB that have met criteria for noninfectiousness.

155.38(2) *Facility risk classification.* The infection control team or designated staff in a facility is responsible for determining the type of risk classification of the facility. The facility risk classification is used to determine the frequency of TB screening. The facility risk classification may change due to an increase or decrease in the number of TB cases during the preceding year.

a. Types of risk classifications.

(1) "Low risk" means that a facility is one in which persons with active TB disease are not expected to be encountered and in which exposure to TB is unlikely.

(2) "Medium risk" means that a facility is one in which health care workers will or might be exposed to persons with active TB disease or to clinical specimens that might contain *M. tuberculosis*.

(3) "Potential ongoing transmission" means that a facility is one in which there is evidence of person-to-person transmission of *M. tuberculosis*. This classification is a temporary classification. If it is determined that this classification applies to a facility, the facility shall consult with the department's TB control program.

b. Classification criteria—low risk.

(1) Inpatient settings with 200 or more beds: If a facility has fewer than six TB patients for the preceding year, the facility shall be classified as low risk.

(2) Inpatient settings with fewer than 200 beds: If a facility has fewer than three TB patients for the preceding year, the facility shall be classified as low risk.

(3) Outpatient, outreach, and home-based health care settings: If a facility has fewer than three TB patients for the preceding year, the facility shall be classified as low risk.

c. Classification criteria—medium risk.

(1) Inpatient settings with 200 or more beds: If a facility has six or more TB patients for the preceding year, the facility shall be classified as medium risk.

(2) Inpatient settings with fewer than 200 beds: If a facility has three or more TB patients for the preceding year, the facility shall be classified as medium risk.

(3) Outpatient, outreach, and home-based health care settings: If a facility has three or more TB patients for the preceding year, the facility shall be classified as medium risk.

d. Classification criteria—potential ongoing transmission. If evidence of ongoing *M. tuberculosis* transmission exists at a facility, the facility shall be classified as potential ongoing transmission, regardless of the facility's previous classification.

155.38(3) *Baseline TB screening procedures for facilities.*

a. All facility staff members shall receive baseline TB screening upon hire. Baseline TB screening consists of two components: (1) assessing for current symptoms of active TB disease and (2) using a two-step TST or a single IGRA to test for infection with *M. tuberculosis*.

b. A staff member may begin working with clients or residents after a negative TB symptom screen (i.e., no symptoms of active TB disease) and a negative TST (i.e., first step) or negative IGRA. The second TST may be performed after the staff member starts working with clients or residents.

c. A staff member with a new positive test result for *M. tuberculosis* infection (i.e., TST or IGRA) shall receive one chest radiograph result to exclude TB disease. Repeat radiographs are not needed unless symptoms or signs of TB disease develop or unless recommended by a clinician. Treatment for LTBI should be considered in accordance with CDC guidelines.

d. A staff member with documentation of past positive test results (i.e., TST or IGRA) and documentation of the results of a chest radiograph indicating no active disease, dated after the date of the positive TST or IGRA test result, does not need another chest radiograph at the time of hire.

e. TB, TST or IGRA tests for *M. tuberculosis* infection do not need to be performed for staff with a documented history of TB disease, documented previously positive test result for *M. tuberculosis* infection, or documented completion of treatment for LTBI or TB disease. Documentation of a previously positive test result for *M. tuberculosis* infection can be substituted for a baseline test result if the documentation includes a recorded TST result in millimeters or IGRA result, including the concentration of cytokine measured (e.g., interferon-gamma (IFN-g)). All other staff should undergo baseline testing for *M. tuberculosis* infection to ensure that the test result on record in the setting has been performed and measured using the recommended diagnostic procedures.

f. A second TST is not needed if the staff member has a documented TST result from any time during the previous 12 months. If a newly employed staff member has had a documented negative TST result within the previous 12 months, a single TST can be administered in the new setting. This additional TST represents the second stage of two-step testing. The second test decreases the possibility that boosting on later testing will lead to incorrect suspicion of transmission of *M. tuberculosis* in the setting.

g. Previous BCG vaccination is not a contraindication to having an IGRA, a TST or two-step skin testing administered. Health care workers with previous BCG vaccination should receive baseline and serial testing in the same manner as those without BCG vaccination. Evaluation of TST reactions in persons vaccinated with BCG should be interpreted using the same criteria for those not BCG-vaccinated. A health care worker's history of BCG vaccination should be disregarded when administering and interpreting TST results. Prior BCG vaccination does not cause a false-positive IGRA test result.

155.38(4) *Serial TB screening procedures for facilities.*

a. *Facilities classified as low risk.* After baseline testing of staff for infection with *M. tuberculosis*, additional TB screening of staff is not necessary unless an exposure to *M. tuberculosis* occurs.

b. *Facilities classified as medium risk.*

(1) After undergoing baseline testing for infection with *M. tuberculosis*, staff should receive TB screening annually (i.e., symptom screen for all staff members and testing for infection with *M. tuberculosis* for staff members with baseline negative test results).

(2) Staff members with a baseline positive or new positive test result for *M. tuberculosis* infection or documentation of previous treatment for LTBI or TB disease shall receive one chest radiograph result to exclude TB disease. Instead of participating in serial testing, staff should receive a symptom screen annually. This screen should be accomplished by educating the staff about symptoms of TB disease and instructing the staff members to report any such symptoms immediately to the occupational health unit. Treatment for LTBI should be considered in accordance with CDC guidelines.

c. *Facilities classified as potential ongoing transmission.* Testing for infection with *M. tuberculosis* may need to be performed every eight to ten weeks until lapses in infection control have been corrected and no additional evidence of ongoing transmission is apparent. The potential ongoing transmission classification should be used only as a temporary classification. This classification warrants immediate investigation and corrective steps. After a determination that ongoing transmission has ceased, the setting shall be reclassified as medium risk for a minimum of one year.

155.38(5) *Screening of staff who transfer to other facilities.*

a. *Staff transferring from a low-risk facility to another low-risk facility.* After a baseline result for infection with *M. tuberculosis* is established and documented, serial testing for *M. tuberculosis* infection is not necessary for staff transferring from a low-risk facility to another low-risk facility.

b. *Staff transferring from a low-risk facility to a medium-risk facility.* After a baseline result for infection with *M. tuberculosis* is established and documented, annual TB screening, including a symptom screen and TST or IGRA for persons with previously negative test results, should be performed for staff transferring from a low-risk facility to a medium-risk facility.

155.38(6) *Baseline TB screening procedures for residents of residential, inpatient, and halfway house facilities.*

a. TB screening is a formal procedure to evaluate residents for LTBI and TB disease. Baseline TB screening consists of two components: (1) assessing for current symptoms of active TB disease and (2) using a two-step TST or a single IGRA to test for infection with *M. tuberculosis.*

b. All residents shall be assessed for current symptoms of active TB disease upon admission. Within 72 hours of a resident's admission, baseline TB testing for infection shall be initiated unless baseline TB testing occurred within three months prior to the resident's admission.

c. Residents with a new positive test result for *M. tuberculosis* infection (i.e., TST or IGRA) shall receive one chest radiograph result to exclude TB disease. Repeat radiographs are not needed unless symptoms or signs of TB disease develop or unless recommended by a clinician.

d. Residents with documentation of past positive test results (i.e., TST or IGRA) and documentation of the results of a chest radiograph indicating no active disease, dated after the date of the positive TST or IGRA test result, do not need another chest radiograph at the time of admission.

e. TB, TST or IGRA tests for *M. tuberculosis* infection do not need to be performed for residents with a documented history of TB disease, a documented previously positive test result for *M. tuberculosis* infection, or documented completion of treatment for LTBI or TB disease. Documentation of a previously positive test result for *M. tuberculosis* infection can be substituted for a baseline test result if the documentation includes a recorded TST result in millimeters or IGRA result, including the concentration of cytokine measured (e.g., IFN-g). All other residents should undergo baseline testing for *M. tuberculosis* infection to ensure that the test result on record in the setting has been performed and measured using the recommended diagnostic procedures.

f. A second TST is not needed if the resident has a documented TST result from any time during the previous 12 months. If a new resident has had a documented negative TST result within the previous 12 months, a single TST can be administered in the new setting. This additional TST represents the second stage of two-step testing. The second test decreases the possibility that boosting on later testing will lead to incorrect suspicion of transmission of *M. tuberculosis* in the setting.

g. After baseline TB screening is accomplished, serial TB screening of the residents is not recommended.

155.38(7) *Serial TB screening procedures for residents of residential, inpatient, and halfway house facilities.*

a. If a resident is discharged and readmitted to a facility and less than 12 months have passed since the last TB screening, residents should receive a symptom screen upon readmittance. This screen should be accomplished by educating the resident about symptoms of TB disease and instructing the resident to report any such symptoms immediately to the infection control team or designated other staff. If symptoms or signs of TB disease are documented, then a medical evaluation to include a chest X-ray to rule out TB disease is required.

b. If a resident is discharged and readmitted to a facility and more than 12 months have passed since the last TB screening, baseline TB screening should be repeated as outlined in subrule 155.38(6).

[**ARC 0365C**, IAB 10/3/12, effective 11/7/12]

These rules are intended to implement Iowa Code sections 125.13, 125.21 and 135.150.

[Filed emergency 3/20/78—published 4/5/78, effective 3/20/78]
[Filed 6/9/78, Notice 5/3/78—published 6/28/78, effective 8/2/78][1]
[Filed 12/14/78, Notice 11/1/78—published 12/27/78, effective 1/31/79]
[Filed 9/26/80, Notice 7/9/80—published 10/15/80, effective 11/19/80]
[Filed 1/30/81, Notice 12/10/80—published 2/18/81, effective 3/25/81]
[Filed 5/22/81, Notice 3/18/81—published 6/10/81, effective 7/15/81]
[Filed 9/18/81, Notice 7/22/81—published 10/14/81, effective 11/18/81]
[Filed 11/20/81, Notice 8/19/81—published 12/9/81, effective 1/13/82]
[Filed 11/20/81, Notice 10/14/81—published 12/9/81, effective 1/13/82]
[Filed emergency 3/26/82—published 4/14/82, effective 3/26/82]
[Filed 3/26/82, Notice 1/6/82—published 4/14/82, effective 5/19/82]

[Filed 9/24/82, Notice 6/23/82—published 10/13/82, effective 11/17/82]
[Filed 11/18/82, Notice 10/13/82—published 12/8/82, effective 1/12/83]
[Filed 6/2/83, Notice 4/13/83—published 6/22/83, effective 7/27/83]
[Filed emergency 7/27/84—published 8/15/84, effective 7/27/84]
[Filed 10/19/84, Notice 8/15/84—published 11/7/84, effective 12/12/84]
[Filed 9/20/85, Notice 6/19/85—published 10/9/85, effective 11/13/85]
[Filed emergency 2/21/86—published 3/12/86, effective 2/21/86]
[Filed 5/30/86, Notice 3/12/86—published 6/18/86, effective 7/23/86]
[Filed emergency 6/26/87—published 7/15/87, effective 6/26/87]
[Filed 7/8/88, Notice 3/23/88—published 7/27/88, effective 8/31/88]
[Filed 10/28/88, Notice 8/10/88—published 11/16/88, effective 12/21/88]
[Filed 7/2/93, Notice 4/14/93—published 7/21/93, effective 8/25/93]
[Filed 2/25/94, Notice 9/29/93—published 3/16/94, effective 4/20/94][2]
[Filed emergency 6/24/94—published 7/20/94, effective 6/24/94]
[Filed 8/25/95, Notice 6/7/95—published 9/13/95, effective 10/18/95]
[Filed 9/8/95, Notice 5/24/95—published 9/27/95, effective 11/1/95]
[Filed 3/6/98, Notice 11/19/97—published 3/25/98, effective 4/29/98]
[Filed 12/20/00, Notice 8/9/00—published 1/10/01, effective 2/14/01]
[Filed 6/22/01, Notice 3/21/01—published 7/11/01, effective 8/15/01]
[Filed 8/29/02, Notice 6/26/02—published 9/18/02, effective 10/23/02]
[Filed 3/9/06, Notice 2/1/06—published 3/29/06, effective 5/3/06]
[Filed Emergency After Notice ARC 8792B (Notice ARC 8628B, IAB 3/24/10), IAB 6/2/10, effective 7/1/10]
[Filed ARC 9534B (Notice ARC 9436B, IAB 3/23/11), IAB 6/1/11, effective 7/6/11]
[Filed ARC 9774B (Notice ARC 9638B, IAB 7/27/11), IAB 10/5/11, effective 11/9/11]
[Filed ARC 0365C (Notice ARC 0227C, IAB 7/25/12), IAB 10/3/12, effective 11/7/12]

[1] Effective date of Ch 3 delayed by the Administrative Rules Review Committee 70 days from 8/2/78. Delay suspended by the Administrative Rules Review Committee at their meeting held on 9/11/78.

[2] Effective date of 643—3.35(125) delayed 70 days by the Administrative Rules Review Committee at its meeting held April 11, 1994; on June 15, 1994, the Committee voted to delay the rule until adjournment of the 1995 General Assembly.

CHAPTER 156
LICENSURE STANDARDS FOR SUBSTANCE ABUSE TREATMENT PROGRAMS IN CORRECTIONAL FACILITIES

[Prior to 7/27/88, see Substance Abuse, Iowa Department of[805] Ch 6]
[Prior to 3/29/06, see 643—Ch 6]

641—156.1(125) Definitions. Unless otherwise indicated, the following definitions shall apply to the specific terms used in these rules:

"Admissions" means the point in an inmate's relationship with the program at which the screening process has been completed and the inmate is to receive treatment services.

"Affiliation agreement" means a written agreement between the governing authority of the program and another organization under the terms of which specified services, space or personnel are provided to one organization by the other, but without exchange of moneys.

"Applicant" means any substance abuse treatment program which has applied for a license or renewal.

"Application" means the process through which a substance abuse treatment program applies for a license or renewal as outlined in the application procedures.

"Assessment" means the process of evaluating an inmate's strengths, weaknesses, problems, current status, and needs so that a treatment plan can be developed.

"Board" means the state board of health created pursuant to Iowa Code chapter 136.

"Case management" means the process of using predefined criteria to evaluate the necessity and appropriateness of client/patient care.

"Chemical dependency" means alcohol or drug dependence or psychoactive substance use disorder as defined by the criteria in the current Diagnostic and Statistical Manual of Mental Disorders, Fourth Edition (DSM IV), or by other standardized and widely accepted criteria.

"Chemical dependency rehabilitation services" means those inmate or group services that are directly related to chemical dependency or the inmate treatment plan. These services may include inmate, group, and family counseling; educational services; curriculum-based therapeutic approaches; self-help groups; and structured recreational activities. These services do not include active employment or education courses beyond the secondary level.

"Chemical substance" means alcohol, wine, spirits, and beer as defined in Iowa Code chapter 123 and controlled substances as defined in Iowa Code section 124.101.

"Concerned person" means an inmate who is receiving treatment services due to problems arising from the person's involvement or association with a correctional substance abuser or chemically dependent inmate or client/patient, and is negatively affected by the behavior of the substance abuser, chemically dependent inmate, or client/patient.

"Continuing care" means providing a specific period of structured therapeutic involvement designed to enhance, facilitate and promote transition from primary treatment to ongoing recovery.

"Continuum of care/treatment" means a structure of interlinked treatment modalities and services designed so that an inmate's changing needs will be met as that inmate moves through the treatment and recovery process.

"Contract" means a formal legal document adopted by the governing authority of the program and any other organization, agency, or individual that specifies services, personnel, or space to be provided to the program as well as the moneys to be expended in the exchange.

"Correctional substance abuse treatment facilities" means those correctional specialized unit facilities and OWI programs that provide 24-hour, live-in, seven-days-a-week substance abuse treatment services.

"Counselor" means an individual who, by virtue of education, training, or experience, provides treatment, which includes advice, opinion, or instruction, to an inmate or in a group setting to allow an opportunity for an inmate to explore the inmate's problems related directly or indirectly to substance abuse or dependence.

"Culturally and environmentally specific" means integrating into the assessment and treatment process the ideas, customs, beliefs, and skills of a given population, as well as an acceptance, awareness, and celebration of diversity regarding conditions, circumstances, and influences surrounding and affecting the development of an inmate or group.

"Department" means the Iowa department of public health.

"Designee" means the staff person or counselor who is delegated tasks, duties and responsibilities normally performed by the treatment supervisor, treatment director or executive director.

"Detoxification" means the withdrawal of an inmate from a physiologically addicting substance.

"Director" means the director of the Iowa department of public health.

"Discharge criteria" means criteria to be considered when determining appropriateness of discharge or referral to a different level of treatment.

"Discharge planning" means the process, begun at admission, of determining a client/patient's continued need for treatment services and of developing a plan to address ongoing client/patient posttreatment needs. Discharge planning may or may not include a document identified as a discharge plan.

"Division" means the division of behavioral health and professional licensure.

"Extended residential program" means a designated unit for substance abuse treatment that is staffed 24 hours a day, seven days a week. There is a structured daily schedule. Treatment services total a minimum of 20 hours a week for no less than four months, unless the primary residential program is two months or longer.

"Facility" means a hospital, correctional institution, a program located in a judicial district, or detoxification center, or installation providing care, maintenance, and treatment for substance abusers and licensed by the department under Iowa Code section 125.13.

"Follow-up" means the process for determining the status of an inmate who has been referred to an outside resource for services or who has been discharged from the program.

"Governing body" means the individual(s), group, or agency that has ultimate authority and responsibility for the overall operation of the facility.

"Inmate" means a person confined in a correctional institution or under the supervision of the department of corrections or a judicial district department of correctional services as a result of a conviction of a public offense.

"Intake" means the process of collecting and assessing information to determine the appropriateness of admitting or retaining an inmate in a substance abuse treatment program.

"Iowa board of substance abuse certification" means the professional certification board that certifies substance abuse counselors and prevention specialists in the state of Iowa.

"Licensee" means any program licensed by the department.

"Licensure" means the issuance of a license by the department upon due process by the board which validates the licensee's compliance with substance abuse standards and authorizes the licensee to operate a substance abuse treatment program in the state of Iowa.

"Licensure weighting report" means the report that is used to determine the type of license for which a program qualifies based on point values assigned to areas reviewed and total number of points attained. In addition, a minimum percent value in each of three categories shall be attained to qualify a program for a license as follows: 95 percent or better rating in clinical, administrative and programming for a three-year license; 90 percent or better rating in clinical, administrative and programming for a two-year license; or less than 90 percent but no less than 70 percent rating in clinical, administrative and programming for a one-year license.

"May," in the interpretation of a standard, means an acceptable method that is recognized but not necessarily preferred.

"Outpatient program" means substance abuse services totaling a minimum of ten hours per week for no less than three months that are not assigned to a designated unit.

"Primary residential program" means a designated unit for substance abuse treatment that is staffed 24 hours a day, seven days a week. There is a structured daily schedule. Treatment services total a minimum of 30 hours per week for no less than one month.

"Program" means any partnership, corporation, association, correctional facility, governmental subdivision, or public or private organization.

"Protected classes" means classes of people who have required special legislation to ensure equality.

"Quality improvement" means the process of objectively and systematically monitoring and evaluating the quality and appropriateness of client/patient care to improve client/patient care and resolve identified problems.

"Referral agreement" means a written document defining a relationship between the program and an outside resource for the provision of inmate services that are not available within the substance abuse treatment program.

"Rehabilitation" means assisting an inmate to attain the fullest physical, mental, social, vocational, and economic usefulness within the inmate's own capabilities. Rehabilitation may include, but is not limited to, medical treatment, psychological therapy, occupational training, job counseling, prosocial behavioral change and domestic rehabilitation/habilitation, and education.

"Relapse" means progressively irresponsible, inappropriate and dysfunctional or criminal behavior patterns that could lead to resumption of alcohol or drug use. "Relapse" also refers to the resumption of alcohol or drug use.

"Rule" means each statement of general applicability that implements, interprets, or prescribes department law or policy, or that describes the organization, procedure or practice requirements of the department. The term includes the amendment or repeal of existing rules as specified in the Iowa Administrative Code.

"Screening" means the process by which a client/patient is determined to be appropriate and eligible for admission to a particular program. The focus is on the minimum criteria necessary for appropriateness/eligibility.

"Shall," in the interpretation of a standard, means a mandatory statement; that is, the only acceptable method under the present standards.

"Should," in the interpretation of a standard, means the commonly accepted method, yet allows for the use of effective alternatives.

"Staff" means any individual who provides services to the program on a regular basis as a paid employee, agent, or consultant or as a volunteer.

"Standards" means specifications that represent the minimum criteria of a substance abuse treatment program which are acceptable for the issuance of a license.

"Substance abuser" means an inmate who habitually lacks self-control as to the use of chemical substances or uses chemical substances to the extent that the inmate's health is substantially impaired or endangered or that the inmate's social or economic function is substantially disrupted.

"Treatment" means the broad range of planned and continuing inpatient, outpatient, and residential care services, including diagnostic evaluation, counseling, and medical, psychiatric, psychological, and social service care which may be extended to substance abusers, concerned persons, concerned family members or significant others, and which is geared toward influencing the inmate's behavior to achieve a state of rehabilitation.

"Treatment days" means days in which the treatment program is open for services or actual working days.

"Treatment plan" means a written plan which specifies the goals, activities, and services determined through process of assessment to be appropriate to meet the objective needs of the inmate.

"Treatment planning" means the process by which a counselor and client/patient identify and rank problems, establish agreed-upon goals, and decide on the treatment process and resources to be utilized.

"Treatment supervisor" means an individual who, by virtue of education, training, or experience, is capable of assessing the psychosocial history of a substance abuser to determine the treatment plan most appropriate for the inmate. This individual shall be designated by the applicant.

641—156.2(125) Inspection. Upon approval of the warden/superintendent or district director, each applicant or licensee shall agree as a condition of license to permit properly designated representatives of the department to enter into and inspect any and all premises of facilities for which a license has been

either applied or issued to verify information contained in the application or to ensure compliance with all laws, rules, and regulations during all hours of operation of the facility and at any other reasonable hour. Further, each licensee shall agree to permit properly designated representatives of the department to audit and collect statistical data from all records maintained by the licensee. Right of entry and inspection shall, under due process of law, extend to any premises on which the department has reason to believe a program is being operated in violation of these rules. A facility shall not be licensed which does not permit inspection by the department or examination of all records, including financial records, methods of administration, general and special dietary programs, the disbursement of drugs and methods of supply, and any other records the board deems relevant to the establishment of a system.

641—156.3(125) General standards for all correctional substance abuse treatment programs. The following standards shall apply to all correctional substance abuse treatment programs in the state of Iowa regardless of the category of treatment services provided by the programs. In situations in which differences between general standards for all treatment programs and specific standards occur, both general and specific standards must be met.

156.3(1) *Procedures manual.* All programs shall develop and maintain a procedures manual. This manual shall define the program's policies and procedures to reflect the program's activities. Revisions to the procedures manual shall be entered with the date, name, and title of the individual making the entries. This manual shall contain all of the required written policies, procedures, definitions, and all other documentation required by these standards in the following areas:

a. Organization and management of the program;
b. Personnel policies;
c. Medical services/detoxification;
d. Staff training;
e. Intake and initial assessment;
f. Treatment planning;
g. Inmate case records;
h. Discharge planning;
i. Inmate rights;
j. Confidentiality of inmate records;
k. Medication control;
l. Treatment philosophy;
m. Objectives;
n. The role of the coordinator/director in charge of this service;
o. Admission criteria; and
p. Interrelationship with other service components and providers.

The policies and procedures manual shall be reviewed and approved on an annual basis.

156.3(2) *Personnel.* Written personnel policies and procedures shall be developed by all programs. Merit rules may be utilized in lieu of specific program personnel policies and procedures.

a. All programs shall have written policies and procedures that address the following areas:
(1) Recruitment, selection, and certification of staff members;
(2) Recruitment and selection of volunteers;
(3) Wage and salary administration;
(4) Promotions;
(5) Employee benefits;
(6) Working hours;
(7) Vacation and sick leave;
(8) Lines of authority;
(9) Rules of conduct;
(10) Disciplinary actions and termination of employees;
(11) Methods for handling cases of inappropriate client care;
(12) Work performance appraisal;

(13) Employee accidents and safety;

(14) Employee grievances; and

(15) Policy on staff persons suspected of using or abusing substances.

b. The written personnel policies and practices shall include an equal employment opportunity policy and an affirmative action plan for hiring members of protected classes.

c. There shall be written job descriptions.

d. Job descriptions shall accurately reflect the actual job situation and shall be reviewed when necessary by the executive director or whenever there is a change in required qualifications or duties.

e. All positions shall have job descriptions included in the personnel section of the procedures manual or personnel record of the staff member.

f. The written personnel policies and practices shall include a mechanism for the written evaluation of personnel performance on at least an annual basis. Evidence that this evaluation is reviewed with the employee and that the employee is given the opportunity to respond to this evaluation shall be documented.

g. A personnel record shall be kept on each staff member. These records shall contain as applicable:

(1) Verification of training, experience, and all professional credentials relevant to the position;

(2) Documentation of a criminal records check with the Iowa division of criminal investigation;

(3) Job performance evaluations;

(4) Incident reports;

(5) Disciplinary actions taken; and

(6) Documentation of review and adherence to confidentiality laws and regulations. This review and agreement shall occur prior to assumption of duties.

h. Written policies and procedures shall be designed to ensure confidentiality of personnel records and a delineation of authorized personnel who have access to various types of personnel information.

i. Personnel providing screening, evaluations, assessments or treatment shall be certified through the Iowa board of substance abuse certification, or certified by an international certification and reciprocity consortium member board, or have education, training, and experience in the substance abuse field.

j. There shall be written policies related to the prohibition of sexual harassment.

k. There shall be written policies related to the implementation of the Americans with Disabilities Act.

156.3(3) *Medical services.* A medical history and physical examination shall be conducted for all inmates within seven days of admission to the residential OWI facility. Laboratory examinations may be completed as deemed necessary by the physician.

The program shall have written policies and procedures defining the appropriate action to be taken when a medical emergency arises and the detoxification of an inmate is necessary.

OWI facilities shall ensure by contract or affiliation agreement that emergency medical services at a general hospital are available on a 24-hour, seven-days-a-week basis.

156.3(4) *Confidentiality.* All inmate substance abuse records shall be kept confidential and shall be handled in compliance with the Confidentiality of Alcohol and Drug Abuse Patient Records regulations, 42 CFR Part 2, effective June 9, 1987, which implement federal statutory provisions, 42 U.S.C. 290dd-3, applicable to alcohol abuse client/patient records, and 42 U.S.C. 290ee-3, applicable to drug abuse client/patient records.

a. *Disclosure of benefits.* If the inmate gives specific written consent, the content of the record may be disclosed to legal counsel upon written endorsement by the attorney to nongovernmental personnel for the purpose of collecting health insurance claims or other benefits or to a present or potential employer when employment is conditioned upon the status or progress in a treatment program.

b. *Disclosure for evaluation.* Disclosure of information for research, management, audit, or evaluation purposes must be specifically authorized by the warden/superintendent or district director.

c. *Record of consent.* The inmate's written release of information shall be kept in the inmate's record.

d. *Confidentiality orientation.* A program shall ensure that all staff and inmates, as a part of their initial orientation, are made aware of the confidentiality requirements. Any decision to disclose inmate information under any provision of Iowa Code chapter 125, or other applicable federal or state rule which permits disclosure, shall be made only by the warden/superintendent or district director.

156.3(5) *Clinical oversight.* The program shall have appropriate clinical oversight to ensure quality of clinical services provided to inmates. Clinical oversight may be provided in house or through consultation. Clinical oversight may include assisting the program in developing policies and procedures relating to the assessment and treatment of psychopathology, assisting in the training of the staff and providing assistance to the clinical staff in assessment or treatment. The executive director or designee shall ultimately be responsible for clinical services and implementation of treatment services to inmates.

156.3(6) *Staff development and training.* There shall be written policies and procedures that establish staff development. Staff development shall include orientation for and opportunities for continuing job-related education.

Documentation of continuing education to maintain substance abuse certification shall meet the requirements of this subrule.

a. Evidence of substance abuse certification or orientation which includes the following: psychosocial, medical, and pharmacological information, confidentiality, and tuberculosis and blood-borne pathogens; an orientation to the program and community resources; counseling skill development; HIV/AIDS (human immunodeficiency virus/acquired immune deficiency syndrome) information/education; and the attitudes, values and lifestyles of racially diverse cultures, other cultures and special populations.

b. The program shall establish on-site training programs or enter into relationships with outside resources capable of meeting staff training needs.

c. The staff development program shall ensure that staff members are kept informed of new developments in the field of substance abuse treatment and rehabilitation.

d. In-service training programs shall be instituted when program operations or functions are changed and shall be designed to allow staff members to develop new skills.

e. Staff development activities and participation in state, national and regional training shall be planned and scheduled on an annual basis. These activities shall be documented in order to evaluate their scope, effectiveness, attendance, and amount of time spent on such efforts. The written plan for on-site staff development and the activities for professional growth and development of personnel shall be based on the annual needs assessment and shall be available to all personnel.

f. A record shall be kept of on-site training activities and shall include, but not necessarily be limited to, the following:

(1) Date of the meeting;

(2) Names of persons attending; and

(3) Topics discussed.

156.3(7) *Intake.* Clearly stated written criteria shall determine the eligibility of inmates for admission to level of care. The program shall have written policies and procedures governing a uniform intake process that defines the following:

a. The types of information to be gathered on all inmates upon admission; and

b. Procedures to be followed when accepting referrals.

156.3(8) *Orientation.* During the intake process, documentation shall be made that the inmate has been informed of the following:

a. General nature and goals of the correctional substance abuse program;

b. Rules governing conduct and infractions that can lead to disciplinary action or discharge from the program;

c. Inmate's rights and responsibilities;

d. Confidentiality laws, rules, and regulations; and

e. Treatment costs to be borne by the individual, if any.

156.3(9) *Assessment.*

a. Sufficient information shall be collected during the intake process so that the assessment process allows for the development of a complete assessment of the inmate's status and a comprehensive plan of treatment can be developed.

b. A complete assessment of the inmate's status, which shall include an analysis and synthesis of the intake data, shall be developed and shall address the inmate's strengths, problems, and areas of clinical concern.

c. If the initial assessment was developed by personnel of the Iowa Medical and Classification Center (IMCC) or other correctional institution personnel, the substance abuse treatment program must document review of information in the inmate's record and provide updates or amendments as applicable.

d. The following information shall be collected as part of the assessment process:

(1) Identifying information which includes name, home address, and telephone number;

(2) Demographic information which includes date of birth, sex, race or ethnicity;

(3) Presenting problem;

(4) Substance abuse history, including type, amount, frequency, and duration of substance use;

(5) Family history, which describes the family composition and dynamics;

(6) Education status and history, which describes levels of achievement;

(7) Vocational, employment status and history, which describes skills or trades learned, record of jobs held, duration, and reasons for leaving;

(8) Peers and friends, which includes a description of interpersonal relationships and interaction with persons and groups outside the home, if available;

(9) Legal history, which describes involvement with the criminal justice system;

(10) Medical and health history, including any incidences of overdoses and any physical indicators of contagious diseases for which necessary action was required in accordance with the Iowa Code;

(11) Psychological history and mental status;

(12) Any other relevant information which will assist in formulating an initial assessment of the inmate; and

(13) A financial evaluation.

156.3(10) *Treatment plans.* Based upon the initial assessment, a written treatment plan shall be developed and recorded in the inmate's case record.

a. A treatment plan shall be developed as soon after the inmate's admission to the substance abuse program as is clinically feasible, but no later than 30 days following admission.

b. The treatment plan shall, at a minimum, contain the following:

(1) A clear and concise statement of the inmate's current strengths and needs;

(2) Clear and concise statements of the short- and long-term goals the inmate will be attempting to achieve;

(3) A delineation of primary and support services to be provided to the inmate; and

(4) The staff person(s) to be responsible for the inmate's treatment.

c. Treatment plans shall be developed in conjunction with the inmate. Treatment plans shall be reviewed by the primary counselor and the inmate as often as necessary, but at least every 60 days.

d. A review shall consist of a reassessment of the inmate's current status including accomplishments and needs and a redefinition of treatment goals when appropriate. The date of the review and any change, as well as the persons involved in the review, shall also be recorded.

e. The use of abstract terms, technical jargon, or slang should be avoided in the written treatment plan.

f. Treatment plans shall be culturally and environmentally specific so as to meet the needs of the inmate. Treatment plans shall be written in a manner readily understandable to the inmate, with assistance if necessary.

g. The program shall provide the inmate with a copy of all treatment plans.

156.3(11) *Progress notes.* An inmate's progress and current status in meeting the goals set in the treatment plan as well as efforts by staff members to help the inmate achieve these stated goals shall be recorded in the inmate's case record. Information shall be noted following each inmate's counseling

session. Group counseling sessions shall be summarized at least monthly for each inmate receiving group counseling services in an outpatient program. Group summaries shall be completed at least biweekly for inmates receiving residential correctional substance abuse treatment services.

a. Entries shall be filed in chronological order and shall include the date of service or the observation made, the date of the entry, and the signature or initials and staff title of the individual rendering the service. All progress notes shall be entered into the inmate's case record in permanent pen, by typewriter, or by computer. In those instances in which records are maintained electronically, a staff identification code number authorizing access shall be accepted in lieu of a signature.

b. All entries that involve subjective interpretations of an inmate's progress should be supplemented with a description of the actual behavioral observations which were the basis for the interpretations.

c. The use of abstract terms, technical jargon, or slang should be avoided in progress notes.

d. The program shall develop a uniform progress note format to be used by all clinical staff.

156.3(12) *Discharge planning.*

a. The substance abuse program shall participate in release planning through the discharge summary. The discharge summary shall contain:

(1) Summary of current strengths and weaknesses of inmate;

(2) Summary of assessment results;

(3) Summary of treatment activities;

(4) Social family support;

(5) Summary of current client status to include motivation/participation; and

(6) Recommendations that include the reason for referral and prognosis.

b. The program shall maintain a list of all substance abuse resources available within the state. The list of resources shall, at a minimum, contain the following:

(1) The name and location of the resource;

(2) The types of services provided by the resource.

156.3(13) *Quality improvement.* The program shall have an ongoing quality improvement process designed to objectively and systematically monitor and evaluate the quality and appropriateness of inmate care, pursue opportunities to improve inmate care, and resolve identified problems.

a. The program shall have a written plan for a quality improvement process. The written plan shall describe the objectives, organization, scope, and mechanisms for overseeing the effectiveness of monitoring, evaluation, and problem-solving activities.

b. The program shall establish written policies and procedures to describe and document the quality improvement process, including the monitoring and evaluation activities of the program. The policies and procedures shall ensure that:

(1) Information is collected or screened by a designated individual(s) or committee. Quality improvement activities may be contracted through all outside resources;

(2) Objective criteria are utilized in the development and application of criteria relating to the care or service the program provides; and

(3) Objective criteria are utilized in the evaluation of the information collected in order to identify important problems in, or opportunities to improve, inmate care and clinical performance.

c. The program shall document that the quality of inmate care is improved and identified problems are resolved through appropriate actions taken by the program's administrative and supervisory staff and through professional staff functions.

d. Necessary information shall be communicated among program components, modalities, or services when problems or opportunities to improve inmate care involve more than one program component or service.

e. The program shall ensure that the status of identified problems is tracked to ensure improvement or resolution.

f. The program shall ensure that information from program components or services and the findings of distinct quality improvement activities are used to detect trends, patterns of performance, and potential problems that affect more than one program component or service.

g. The objectives, scope, organization, and effectiveness of the quality improvement process are evaluated at least annually and revised as necessary.

156.3(14) *Inmate case records.* There shall be written policies and procedures governing the compilation, storage, and dissemination of inmate case records.

a. These policies and procedures shall ensure that:

(1) The program exercises its responsibility for safeguarding and protecting the inmate case record against loss, tampering, or unauthorized disclosure of information;

(2) The content and format of records are kept uniform; and

(3) The entries in the case record are signed and dated.

b. The program shall provide adequate physical facilities for the storage, processing, and handling of case records. These facilities shall include suitably locked, secured rooms or file cabinets.

c. Appropriate records shall be readily accessible to those staff members providing services directly to the inmate and other persons specifically authorized by program policy. Records should be kept in proximity to the area in which the inmate normally receives services.

d. There shall be a written policy governing the disposal and maintenance of inmate case records. Inmate case records shall be maintained for not less than seven years from the date the record is officially closed.

e. The governing body shall establish policies that specify the conditions under which information may be released and the procedures to be followed for releasing information. Even if a program is not federally funded, all policies and procedures shall be in accordance with applicable provisions of Section 408 of Public Law 92-255, the Drug Abuse Office and Treatment Act of 1972 (21 U.S.C. 1175) as amended by Section 303 of Public Law 93-282, the Comprehensive Alcohol Abuse and Rehabilitation Act amendments of 1974 (88 Stat, 137), the federal confidentiality regulations issued, and state confidentiality laws and rules.

f. An inmate's written authorization shall appear on a consent form containing the following:

(1) The name of the program which is to make the disclosure;

(2) The name or title of the person or organization to which disclosure is to be made;

(3) The name of the inmate;

(4) The purpose or need for the disclosure;

(5) The extent or nature of information to be disclosed; and

(6) Except when the inmate is a mandatory criminal justice system referral, a statement that the consent is subject to revocation at any time, date, event or condition upon which it will expire without express revocation.

g. When participation by an inmate in a treatment program is made a condition of the release of the inmate from confinement, the disposition or status of any criminal proceedings against the inmate, or the execution or suspension of any sentence imposed upon the inmate, the inmate may consent to unrestricted communication between any program in which the inmate is enrolled in fulfillment of a condition and (1) the court granting probation or other posttrial or retrial conditional release, (2) the parole board or other authority granting parole, or (3) probation or parole officers responsible for the inmate's supervision. In addition, when consent is given for disclosures in this manner, consent shall expire 60 days after it is given or when there is substantial change in the inmate's status, whichever is later.

h. All policies related to confidentiality shall apply even after the inmate has terminated active involvement with the program.

i. In a life-threatening situation, or when an inmate's condition or situation precludes the possibility of obtaining written consent, the program may release pertinent medical information to the medical personnel responsible for the inmate's care without the inmate's authorization and without the authorization of the warden/superintendent or district director or designee if obtaining authorization would cause an excessive delay in delivering treatment to the inmate.

j. When information has been released without the inmate's authorization under these standards, the staff member responsible for the release of information shall enter into the inmate's case record all details pertinent to the transaction, which shall include at least:

(1) The date the information was released;
(2) The person to whom the information was released;
(3) The reason the information was released; and
(4) The nature and details of the information given.

k. As soon as possible after the release of information, the inmate shall be informed that it was released.

l. There shall be a record for each inmate that contains the following:
(1) Results of all examinations, tests, and intake and assessment information;
(2) Reports from referring sources;
(3) Treatment plans;
(4) Medication records, which shall allow for the monitoring of all medications administered and the detection of adverse drug reactions. All medication orders in the inmate case records shall define at least the name of the medication, dose, route of administration, frequency of administration, the name of the physician who prescribed the medication, and the name of the person administering or dispensing the medication;
(5) Reports from outside resources, which shall include the name of the resource and the date of the report. These reports shall be signed by the person making the report or by the program staff member receiving the report;
(6) Multidisciplinary case conference and consultation notes if applicable, including the date of the conference or consultation, recommendations made, and action taken;
(7) Correspondence related to the inmate, including all letters and dated notations of telephone conversations relevant to the inmate's treatment;
(8) Treatment consent forms, if applicable;
(9) Information release forms;
(10) Progress notes;
(11) Records of service provided; and
(12) Discharge summary.

156.3(15) *Inmate rights.* The program shall maintain written policies and procedures that ensure that the legal rights of inmates participating in the program are observed and protected.

a. Procedures to inform all inmates of legal rights shall be available at the time of admission into the program.

b. The implementation of these procedures shall be documented.

c. Written policies and procedures for reviewing and responding to an inmate's communications, e.g., opinions, recommendations, and inmate grievances, with a mechanism for redress, shall be documented.

d. Procedures shall be designed to protect the inmate's rights and privacy with respect to facility visitors, e.g., educational or other individual or group visitations at the program.

156.3(16) *Medication control.* Policies and procedures shall be developed to ensure that all medications are administered or self-administered safely and properly in accordance with federal, state, and local laws and regulations. OWI facilities shall be in compliance with 641—subrule 155.22(19).

156.3(17) *Facilities.*

a. The facilities shall comply with rules 641—155.22(125) and 641—155.23(125) or ACA standards or other standards established by the department of corrections.

b. The facilities shall comply with rules 641—155.2(125) to 641—155.20(125).

These rules are intended to implement Iowa Code section 125.13.

[Filed emergency 10/3/86—published 10/22/86, effective 10/3/86]
[Filed 1/23/87, Notice 10/22/86—published 2/11/87]
[Filed emergency 4/16/87—published 5/6/87, effective 4/17/87]
[Filed 7/8/88, Notice 3/23/88—published 7/27/88, effective 8/31/88]
[Filed 8/29/02, Notice 6/26/02—published 9/18/02, effective 10/23/02]
[Filed 3/9/06, Notice 2/1/06—published 3/29/06, effective 5/3/06]

CHAPTER 157
STANDARDS FOR SUBSTANCE ABUSE TREATMENT AND ASSESSMENT PROGRAMS AND THE OPERATING A MOTOR VEHICLE WHILE INTOXICATED (OWI) LAW

[Prior to 3/29/06, see 643—Ch 8]

641—157.1(125) Definitions. Unless otherwise indicated, the following definitions shall apply to the specific terms used in these rules:

"Assessment" means the ongoing process of identifying a diagnosis, ruling out other diagnoses, and determining the level of care needed by the client.

"Course for drinking drivers" means an approved course designed to inform the offender about drinking and driving and to encourage the offender to assess the offender's own drinking and driving behavior in order to select practical alternatives. Enrollment in the course is not limited to persons ordered to enroll, attend, and successfully complete the course required under Iowa Code sections 321J.1 and 321J.17. However, any person under the age of 18 who is required to attend the course for violation of Iowa Code section 321J.2 or 321J.17 must attend a course offered by a substance abuse treatment program licensed under Iowa Code chapter 125. Any instructional course for drinking drivers shall be approved by the department of education in consultation with the community colleges and substance abuse treatment programs licensed under Iowa Code chapter 125 and using the course of instruction detailed in 281—21.31(321J).

"Department" means the Iowa department of public health.

"Evaluation" means the process to evaluate the client's strengths, weaknesses, problems, and needs for the purpose of defining a course of treatment. This includes use of a standardized placement screening and any additional patient/client profile information, and recommendation to an appropriate level of care.

"HIPAA" means the Health Insurance Portability and Accountability Act of 1996.

"Licensed" means issuance of a license by the department and the state board of health, which validates the licensee's compliance with substance abuse program standards and authorizes the licensee to operate a substance abuse program in the state of Iowa.

"Posttreatment" means continuing care after primary treatment has been completed.

"Primary treatment" means substance abuse treatment modality including inpatient, primary residential treatment, extended residential treatment, medically monitored residential, extended outpatient, intensive outpatient, and partial hospitalization.

"Program" means any individual, partnership, corporation, association, governmental subdivision or public or private organization.

"Qualifying program" means a program which has a contract with the state of Iowa or the state's contracted managed care entity to provide substance abuse treatment using a sliding fee scale.

"Satisfactory completion of the drinking drivers course" means receiving at the completion of the course a grade from the course instructor of "C" or "2.0," or better.

"Screening" means the process by which a client/patient is determined at risk and in need of further evaluation. The focus is on the minimum criteria necessary for appropriateness/eligibility.

"Substance abuser" means a person who lacks self-control as to the use of chemical substances or uses chemical substances to the extent that the person's health is substantially impaired or endangered or that the person's social or economic function is substantially disrupted.

"Treatment" means the broad range of planned and continuing, inpatient, outpatient, residential care services, including diagnostic evaluation, counseling, medical, psychiatric, psychological, and social service care, which may be extended to substance abusers, concerned persons, concerned family members, or significant others, and which is geared toward influencing the behavior of such individuals to achieve a state of rehabilitation.

641—157.2(125) Screening, evaluation, treatment, and drinking drivers course. Persons who are charged with operating a motor vehicle while intoxicated (OWI), Iowa Code section 321J.2, and whose driver's license or nonresident operating privileges are revoked under Iowa Code chapter 321J shall

be assigned to undergo a substance abuse evaluation and, if recommended, treatment from a provider licensed by the department under Iowa Code chapter 125.

157.2(1) *Screening.* The initial screening shall consist of a generally accepted standardized substance abuse screening instrument. The program shall utilize a recognized diagnostic test or tool to determine "substance abuse" or "dependence" as those terms are defined in the DSM IV (Diagnostic and Statistical Manual of Mental Disorders, Fourth Edition). In addition, programs shall collect information on blood alcohol content at time of arrest; history of other alcohol or drug-related arrests; history of alcohol/drug treatment; history of mental health problems and treatment; any OWI arrest that included personal injury or additional charge(s); and family history of substance abuse.

157.2(2) *Evaluation.* If the initial screening shows a potential for chemical dependency, then a further evaluation will be completed. This evaluation shall consist of further development of the six assessment dimensions outlined in the American Society of Addiction Medicine, Patient Placement Criteria for the Treatment of Substance-Related Disorders, Second Edition-Revised.

157.2(3) *Treatment.* Treatment shall consist of a broad range of planned and continuing, inpatient, outpatient, and residential care services, including ongoing diagnostic evaluation, counseling, and medical, psychiatric, psychological, and social service care geared toward influencing the behavior of such individuals to achieve a state of rehabilitation. Individuals will be placed in the appropriate level of care at a substance abuse treatment program licensed by the department under Iowa Code chapter 125 in accordance with the American Society of Addiction Medicine, Patient Placement Criteria for the Treatment of Substance-Related Disorders, Second Edition-Revised.

157.2(4) *Drinking drivers course.* Substance abuse treatment programs licensed by the department under Iowa Code chapter 125 may provide the drinking drivers course if the course curriculum is approved by the department of education under Iowa Code section 321J.22 and 281—21.31(321J).

641—157.3(125) Screening, evaluation, treatment, and drinking drivers course completion. The program shall report substance abuse screening, assessment, evaluation and treatment completion to the department of transportation and to the district court in accordance with Iowa Code sections 125.37, 125.84 and 125.86; the federal confidentiality regulations, "Confidentiality of Alcohol and Drug Abuse Patient Records," 42 CFR, Part 2, effective June 9, 1987; HIPAA; and other relevant provisions of federal and state law. The program shall report satisfactory completion of the drinking drivers course to the department of education in accordance with Iowa Code section 321J.22 and 281—21.31(321J); the federal confidentiality regulations, "Confidentiality of Alcohol and Drug Abuse Patient Records," 42 CFR, Part 2, effective June 9, 1987; HIPAA; and other relevant provisions of federal and state law.

157.3(1) *Reporting form.* Programs shall report screening, evaluation, and treatment completion utilizing the form "Notice Iowa Code 321J—Confidential Medical Record." Iowa substance abuse evaluation and treatment providers licensed by the department under Iowa Code chapter 125 shall submit this form online to the department of transportation using the department of transportation's 321J Web site, htpps://www.saeval.dot.state.ia.us.

157.3(2) *Primary treatment.* Upon completion of primary treatment, programs shall report to the department of transportation and the courts that treatment has been completed in accordance with Iowa Code section 321J.22; the federal confidentiality regulations, "Confidentiality of Alcohol and Drug Abuse Patient Records," 42 CFR, Part 2, effective June 9, 1987; HIPAA; and other relevant provisions of federal and state law.

157.3(3) *Posttreatment results.* If the court orders a posttreatment program, the program shall report progress and attendance to the person's probation officer or otherwise as ordered by the court in accordance with Iowa Code section 321J.22; the federal confidentiality regulations, "Confidentiality of Alcohol and Drug Abuse Patient Records," 42 CFR, Part 2, effective June 9, 1987; HIPAA; and other relevant provisions of federal and state law.

157.3(4) *Drinking drivers course.* Substance abuse treatment programs licensed by the department under Iowa Code chapter 125 may provide the drinking drivers course and shall report satisfactory completion of the drinking drivers course to the department of education in accordance with Iowa Code section 321J.22 and 281—21.31(321J).

641—157.4(125) Cost of evaluation and treatment.

157.4(1) *Screening and evaluation.* The program shall charge no more than $125 for the cost of screening and evaluation. The individual or the individual's insurance provider shall be responsible for the costs of the screening and evaluation.

157.4(2) *Treatment.* Qualifying programs shall consider a person admitted to the program pursuant to Iowa Code section 321J.3 who does not possess sufficient income or estate to make payment of the costs of the treatment in whole or in part to be a state patient and eligible for state-funded treatment as provided in Iowa Code section 125.44. Qualifying programs shall utilize a sliding fee schedule approved by the department to determine cost of treatment. There is no prohibition on any individual from paying in whole the cost of treatment.

157.4(3) *Reimbursement.* Programs shall be able to seek reimbursement of the cost of screening, evaluation and treatment from an individual's insurance company, firm or corporation bound to pay, or from Medicaid for an individual who is eligible or enrolled in Medicaid.

641—157.5(125) Timeliness. The program shall conduct and complete substance abuse evaluations and treatment at the program's earliest convenience.

641—157.6(125) Confidentiality. Programs will abide by the federal regulations, "Confidentiality of Alcohol and Drug Abuse Patient Records," 42 CFR, Part 2; Iowa Code section 125.37; HIPAA; and other relevant provisions of federal and state law.

641—157.7(125) Records.

157.7(1) Programs shall maintain records for a minimum of seven years after discharge or completion of screening, evaluation, or treatment, and then destroy or maintain the records based on the program's written policy and procedure.

157.7(2) Upon receipt of a properly executed written release of information signed by the client/patient, the program shall release client/patient records in a timely manner.

a. A program shall not refuse to transfer or release client/patient records related to continuation of care solely because payment has not been received.

b. A program may refuse to release client/patient records which are unrelated to continuation of care if payment has not been received.

c. A program may refuse to file the reporting form required by subrule 157.3(1), "Notice Iowa Code 321J—Confidential Medical Record," reporting screening, evaluation, and treatment completion, if payment has not been received for such services.

[**ARC 8796B**, IAB 6/2/10, effective 7/7/10]

641—157.8(125) Reciprocity. For a resident of a state other than Iowa or an Iowa resident obtaining evaluation or treatment outside the state, screening, evaluation or treatment services shall be provided by programs licensed or approved by that state's substance abuse authority. Programs shall submit the results of the screening, evaluation and treatment to the Iowa department of public health, division of behavioral health and professional licensure, for review and reporting purposes to the Iowa department of transportation.

These rules are intended to implement Iowa Code section 125.13.

[Filed 1/23/98, Notice 11/19/97—published 2/11/98, effective 3/18/98]
[Filed 3/9/06, Notice 2/1/06—published 3/29/06, effective 5/3/06]
[Filed 7/13/07, Notice 4/11/07—published 8/1/07, effective 9/5/07]
[Filed ARC 8796B (Notice ARC 8629B, IAB 3/24/10), IAB 6/2/10, effective 7/7/10]

CHAPTER 158
REGIONS FOR SUBSTANCE ABUSE PREVENTION AND TREATMENT

[Prior to 3/29/06, see 643—Ch 9]

641—158.1(125) Service areas established. The department of public health has established regions for substance abuse prevention and treatment service areas. Substance abuse assessment, prevention and education, and outpatient and follow-up treatment and rehabilitation shall be available in each service area. Emergency treatment provided by a facility affiliated with or part of the medical service of a general hospital, inpatient treatment, residential treatment, and halfway house treatment shall be available within reasonable driving distance of the service area.

641—158.2(125) Request for a change in service areas. Any existing service provider may file an application with the director to change an existing service area.

641—158.3(125) Application. The application shall include the following:

1. The name, address, and description of the applicant;
2. A description of the proposed change;
3. The applicant's rationale in support of the change in service area;
4. The number of clients the applicant proposes to serve and the proposed increase in quality or quantity of services to these clients;
5. A description of community support for the change; and
6. The names and addresses of all affected parties, including existing service providers.

641—158.4(125) Notification of affected parties. Within ten calendar days of receipt of a completed application, the director shall provide written notification to any affected parties identified in the application and shall allow any affected parties so notified 30 calendar days to submit written information in support of, or in opposition to, the application.

641—158.5(125) Public hearing. The director may hold a public hearing at which the applicant and any affected parties may provide an oral presentation with respect to their positions. The director shall give notice to the applicant and all affected parties ten calendar days prior to holding the hearing. The hearing shall not be a contested case hearing as that term is defined in Iowa Code chapter 17A.

641—158.6(125) Proposed decision. The director shall issue a written proposed decision which includes findings of fact and either approves or rejects the application. In issuing this decision, the director shall consider the proposed application, other information received from the applicant, information received from affected parties, the terms of any relevant contract, city and county lines, population concentrations, and existing substance abuse treatment and prevention services.

641—158.7(125) Change during term of contract. The director shall not approve an application which would change a service area during the term of an existing contract or after the release of a request for proposal for a new contract. Applications submitted after issuance of a request for proposal will, if granted, not become effective until after the expiration of the contract awarded pursuant to said request for proposal.

641—158.8(125) State board of health review. The director's proposed decision shall be reviewed by the board at its next regularly scheduled meeting. The board shall review all of the materials considered by the director, as described in rule 158.6(125), and the proposed decision and vote to approve or reject the director's proposed decision.

641—158.9(125) State board of health decision. The board's decision shall be issued in writing and shall be final agency action for the purposes of Iowa Code chapter 17A.

These rules are intended to implement Iowa Code section 125.12.

[Filed 3/2/01, Notice 11/29/00—published 3/21/01, effective 4/25/01]
[Filed 3/9/06, Notice 2/1/06—published 3/29/06, effective 5/3/06]

CHAPTERS 159 to 161
Reserved

CHAPTER 162
LICENSURE STANDARDS FOR PROBLEM GAMBLING TREATMENT PROGRAMS
[Prior to 7/3/96, see Human Services Department, 441—Ch 162]
Rescinded IAB 6/2/10, effective 7/1/10

CHAPTERS 163 to 169
Reserved

CHAPTER 170
ORGANIZATION OF THE DEPARTMENT
[Prior to 7/29/87, Health Department[470]Ch 170]

641—170.1(17A,135) Definitions.

"Department" means the Iowa department of public health.

"Deputy director" means the deputy director of the department of public health.

"Director" means the director of the department of public health.

[**ARC 8663B**, IAB 4/7/10, effective 5/12/10]

641—170.2(17A,135) Mission. The mission of the department of public health is to promote and protect the health of Iowans. The department strives to improve the quality of life for all Iowans by:

1. Preventing epidemics and the spread of disease;
2. Protecting against environmental hazards;
3. Preventing injuries;
4. Promoting healthy behaviors;
5. Preparing for, responding to, and recovering from public health emergencies;
6. Improving access to quality health services; and
7. Strengthening the public health infrastructure.

[**ARC 8663B**, IAB 4/7/10, effective 5/12/10]

641—170.3(17A,136) State board of health. The state board of health is the policymaking body for the Iowa department of public health and has the power and duty to adopt, promulgate, amend and repeal rules; consider legislation; and advise or make recommendations to the governor, general assembly, and director relative to public health, hygiene, and sanitation.

170.3(1) The state board of health consists of 11 members appointed by the governor.

170.3(2) The state board of health meets on the second Wednesday of July and on the second Wednesday of each second month thereafter and at such other times as may be deemed necessary by the president of the board.

[**ARC 8663B**, IAB 4/7/10, effective 5/12/10]

641—170.4(17A,135) Director of the department of public health. The director is the chief administrative officer of the department, and in that capacity is responsible for the programs and services of the department. The director provides the department with national exposure and works with policymakers in both Iowa and Washington, D.C.

170.4(1) The following are the duties and responsibilities of the director. The director:

a. Oversees the establishment of the administrative organization;

b. Makes recommendations to the state board of health;

c. Oversees the adoption of rules for the implementation of statutes;

d. Serves as secretary to the state board of health;

e. Serves as spokesperson and advocate for public health across the state of Iowa, regionally and nationally;

f. Acts as a liaison to local boards of health, local public health administrators, health care providers, and consumers;

g. Represents the department in a variety of state and national organizations; and

h. Serves as the incident commander during public health emergencies and disasters.

170.4(2) Acting director.

a. The director may appoint an employee of the department to serve as acting director, who shall have all the powers and duties of the director.

b. The director may appoint more than one acting director, but only one acting director shall exercise the powers and perform the duties of the director at any time.

[**ARC 8663B**, IAB 4/7/10, effective 5/12/10]

641—170.5(17A,135) Deputy director.

170.5(1) Under the direction of the director, the deputy director has the following duties and responsibilities. The deputy director:

a. Is responsible for the operations of the department, including but not limited to fiscal and personnel management.

b. Supervises and evaluates the work of the department's division directors.

c. Working with the director, is responsible for developing policy, legislation and administrative rules.

d. Assists the director in the development of policies related to marketing and communications, both internally and externally with other agencies, partners, and the public.

e. Provides advice to the director on matters relating to department strategic planning, goals, mission and programs.

f. Represents the director at private, state, and national meetings.

g. Reports on department accomplishments and performance to the director.

h. Is responsible for departmentwide strategic and performance plans, including preparation of the annual report.

i. Serves as the deputy incident commander during public health emergencies and disasters.

j. Represents the director during the director's absence.

170.5(2) The deputy director also serves as the director of one of the divisions in the department.

[**ARC 8663B**, IAB 4/7/10, effective 5/12/10]

641—170.6(17A,135) Executive team. The executive team serves as the leadership team for the department. The director appoints the members of the executive team.

170.6(1) The executive team assists the department director with strategic planning, policy development, and programmatic decision making.

170.6(2) The executive team members communicate division-level information that contributes to intradepartmental and interdepartmental planning and utilization of resources.

[**ARC 8663B**, IAB 4/7/10, effective 5/12/10]

641—170.7(17A,135) Administrative divisions of the department. The department is divided into seven organizational units. In addition to the director's office, there are six divisions in the department, each directed by a division director who reports either to the deputy director or the director.

170.7(1) *Office of the director.* The following are included in the office of the director.

a. *Medical director.* The medical director of the department is a doctor of medicine (M.D.) or osteopathy (D.O.), specializing in public health, who serves as a medical advisor to the department, medical professionals, and the public. The medical director may also serve as the state epidemiologist.

b. *Office of state medical examiner.* The mission of the office of state medical examiner is to establish credibility in death investigation in a system that will operate efficiently and serve the needs of the citizens of Iowa. This is done by providing assistance, direction, and training to county medical examiner personnel and law enforcement officials. Staff is responsible for conducting death investigations and performing autopsies.

c. *Dental board.* The dental board consists of nine members and has the overall responsibility for regulating the professions of dentistry, dental hygiene, and dental assisting in Iowa.

d. *Board of medicine.* The board of medicine, consisting of ten members, regulates the practice of medicine and surgery, osteopathic medicine and surgery, osteopathy and acupuncture.

e. *Board of nursing.* The six-member board of nursing enforces regulations for nursing education, nursing practice and continuing education for nurses.

f. *Board of pharmacy.* The seven-member board of pharmacy is responsible for regulating the practice of pharmacy and the legal distribution and dispensing of prescription drugs and precursor substances throughout Iowa.

170.7(2) *Division of acute disease prevention and emergency response.* This division provides support, technical assistance, education and consultation regarding departmentwide strategic and project planning, personnel resources, public information, infectious disease prevention and control,

injury prevention and control, emergency medical services, and public health and health care emergency preparedness and response. Division programs within these areas also provide regulatory functions. The deputy state epidemiologist and state public health veterinarian are in this division and report to the division director. Included in the division are the following bureaus and centers.

a. The bureau of communication and planning (CAP) provides communication services to the public, public health partners, media, governor's office, and legislators concerning public health programs, services, statutory requirements, administrative rules, and health-related issues. The bureau leads planning work to develop the department's strategic plan and measure and evaluate performance; improve the dissemination of public health data; and improve and evaluate the public health system in Iowa. The bureau provides administrative services to the state health facilities council and manages the certificate of need program. The bureau ensures a competent workforce through human resources and workforce development services.

b. The center for acute disease epidemiology (CADE) works to protect and preserve the health and safety of Iowans from infectious diseases through disease surveillance; investigation of acute outbreaks; education and consultation to county, local, and private health agencies on infectious diseases; immunization and vaccine guidelines; treatment after animal bites; and vaccines for international travel. The center also provides consultation to county and local health agencies on diseases requiring public health intervention; collaborates with the Centers for Disease Control and Prevention by weekly reporting of nationally reportable diseases; and offers health education opportunities through lectures and organizational seminars.

c. The bureau of emergency medical services (EMS) is responsible for EMS provider certification and renewal, service program authorization, and trauma care facility certification and renewal. The bureau provides leadership and resource support for planning, medical direction, EMS education, public education and injury prevention. Through oversight and coordination, the bureau's objective is the development, implementation and evaluation of a comprehensive statewide EMS system.

d. The center for disaster operations and response (CDOR) is responsible for the development and implementation of emergency plans and operating procedures for the department while ensuring integration into Iowa's Homeland Security and Emergency Management Plan. CDOR works with local public health agencies, hospitals, and other health care entities to ensure communications, capacity, capability, emergency planning, drills and exercises, and education to detect, respond to, and recover from bioterrorism, public health emergencies, and other disasters that may affect the health of Iowans. Additionally, CDOR is responsible for the department's emergency coordination center (ECC), continuity of operations plan, Iowa public health response teams, and the Strategic National Stockpile (SNS).

e. The bureau of immunization and tuberculosis works to protect the health of Iowans from vaccine-preventable diseases and tuberculosis, with the goal of reducing and ultimately eliminating the incidence of these diseases. The bureau conducts surveillance and prevention activities in conjunction with public and private health care providers. Surveillance activities include disease monitoring and reporting, laboratory testing, disease investigation, and rapid institution of disease control measures, including isolation and quarantine. Bureau prevention and treatment activities include targeted disease testing, vaccination programs, dispensing medications, health care provider consultation, and education.

f. The office of health information technology works to ensure a healthier Iowa through the use and exchange of electronic health information to improve patient-centered health care and population health. The office leads planning work to implement statewide electronic exchange of health information to improve the quality of health care, ensure patient safety, and increase efficiency in health care delivery.

170.7(3) *Division of administration and professional licensure.* This division provides services for birth, marriage and death certificates; monitors and reports progress on health objectives and identifies emerging health issues; coordinates 19 licensing boards regulating the activities of 39 health professions; provides fiscal management of department funding and contract administration; and provides software, network and computer support. The following bureaus are included in this division.

a. The bureau of finance provides support to department staff in functions of fiscal and office services, including fiscal management of revenues and expenditures, coordination of office supply purchases, contract administration, use of state vehicles, mail, printing, and inventory control.

b. The bureau of information management provides information technology support for the department, including maintaining the local area network, core software applications, mainframe access, program-specific software application development, hardware installation and help-desk activities.

c. The bureau of professional licensure provides staff support in licensing and certification to the following boards:

(1) Athletic training.
(2) Barbering.
(3) Behavioral science.
(4) Chiropractic.
(5) Cosmetology arts and sciences.
(6) Dietetics.
(7) Hearing aid dispensers.
(8) Sign language interpreters and transliterators.
(9) Massage therapy.
(10) Mortuary science.
(11) Nursing home administrators.
(12) Optometry.
(13) Physical and occupational therapy.
(14) Physician assistants.
(15) Podiatry.
(16) Psychology.
(17) Respiratory care.
(18) Social work.
(19) Speech pathology and audiology.

d. The bureau of health statistics provides certified copies of birth, death, and marriage records to Iowans and other entitled persons.

170.7(4) *Division of behavioral health.* This division promotes the prevention of substance abuse and problem gambling, secondary conditions among people with disabilities, and violent behavior. The division also regulates substance abuse and gambling treatment programs. The division is responsible for approving laboratories that desire to perform drug-testing services for businesses located or doing business in Iowa. Included in the division are the following bureaus and offices.

a. The bureau of administration, regulation, and licensure licenses and monitors substance abuse treatment programs, including community-based and hospital-based programs, assessment and evaluation services, and operating while intoxicated (OWI) correctional and correctional institution programs. The bureau also licenses and monitors problem gambling treatment programs in Iowa.

b. The bureau of substance abuse prevention and treatment provides leadership and resources pertaining to substance abuse in the state. The bureau focuses on both substance abuse prevention and treatment and oversees resources provided by the state and federal governments.

c. The office of gambling treatment and prevention provides funding on a sliding fee scale for outpatient counseling for families, concerned persons, and gamblers affected by problem gambling. The program serves as a resource for all Iowans by providing information, referral, and educational services.

d. The office of injury prevention strives to address the burden of injury on the public health by disseminating information about injury, deaths and hospitalizations and promoting programs directed at preventing both intentional and unintentional injuries.

e. The bureau of HIV, STD, and hepatitis administers programs for the prevention, detection, and treatment of HIV, chlamydia, gonorrhea, syphilis, and viral hepatitis. Program staff provides information, training, and funding to local public health agencies and community-based organizations for prevention and control of these diseases; offers counseling, testing, and referral services; notifies sexual and needle-sharing partners of potential exposures; provides medications, case management,

and supportive services for diagnosed persons; and collects data on disease diagnoses to be used for program planning and evaluation related to prevention and care.

170.7(5) *Division of environmental health.* This division provides both educational and regulatory services to ensure a safe and healthy environment for Iowans. The state toxicologist is in this division and reports to the division director. Included in the division are the following bureaus and offices.

a. The bureau of radiological health regulates facilities that use radioactive materials or utilize ionizing radiation-producing machines; credentials persons who use radioactive material or operate ionizing radiation-producing machines; and provides emergency response related to radioactive materials and nuclear power plant incidents.

b. The bureau of lead poisoning prevention ensures that children are tested for lead poisoning and provides medical and environmental case management for cases of childhood lead poisoning through direct services and grant support to local public health partners. The bureau also regulates professionals who work with lead-based paint through required notification, certification, and work practice standards for those individuals. In addition, the bureau conducts surveillance and education on lead exposure, pesticide exposure, and occupational health and safety issues.

c. The bureau of environmental health services provides assessment, education, consultation, technical assistance and resource referral related to the delivery of environmental health services, emergency response, and regulatory functions to local public health agencies and local boards of health. In addition, the bureau provides consultation and assistance to the public on environmental health matters. The bureau also has regulatory oversight for public swimming pools and spas, water treatment devices, backflow prevention assembly testers, tattoo artists and establishments, and migrant labor camps. In addition, the bureau conducts Grade A milk rating inspections.

d. The office of plumbing and mechanical systems supports the plumbing and mechanical systems board and administers licensing and continuing education requirements for professionals in the plumbing, mechanical, hydronics and refrigeration trades.

170.7(6) *Division of health promotion and chronic disease prevention.* This division promotes and supports healthy behaviors and communities, the prevention and management of chronic diseases, and the development of public health infrastructure and access to health care services at local and state levels. Included in the division are the following bureaus and offices.

a. The bureau of nutrition and health promotion provides nutrition education, supplemental foods, breast-feeding promotion and support, and referrals for health services for low-income women and their children through the Women, Infants and Children (WIC) program. Health promotion programs bring state and local partners together to build a network of health partners dedicated to healthy nutrition and physical activity and provide funding and technical support/coaching to Iowa communities for community wellness initiatives.

b. The oral health bureau, overseen by the public health dental director, promotes and advances health behaviors to reduce the risk of oral diseases and improve the oral health status of all Iowans. Programs are in place targeting pregnant women, children, and youth for the prevention, early identification, referral, and treatment of oral disease.

c. The bureau of local public health provides education, ongoing technical assistance, monitoring, and support to local boards of health and local public health agencies for the development and delivery of services that contribute to compliance with the Iowa Public Health Standards. The bureau acts as a direct liaison between the department and the local public health system to achieve a common goal of promoting and protecting the health of Iowans and contributing to the state of Iowa's goal of becoming a "healthy community."

d. The office of multicultural health assists in fostering partnerships between state government programs, local governments, community groups, and ethnic/racial communities, assists in policy analysis to improve health care access and services for minority populations, and advocates for policies and practices that will reduce health disparities among Iowa's minority, immigrant, and refugee populations.

e. The office for healthy communities works to build healthy communities, thus supporting the department's vision of healthy people in healthy communities. Communities benefit from technical

assistance and support services that improve the capacity of communities to plan and implement health improvement programs.

f. The bureau of family health promotes the health of Iowa families by developing family-centered, community-based, coordinated, and culturally sensitive systems of care for women, infants, children, and adolescents and their families.

g. The bureau of health care access advocates for quality health care delivery systems for all Iowans and provides information, referrals, education, grant opportunities, technical assistance, and planning for Iowa communities. The bureau is the designated state entity for addressing rural health, primary care and health care workforce issues in Iowa and works to improve access to health care for vulnerable populations.

h. The bureau of chronic disease prevention and management supports the development and implementation of services that help prevent chronic disease or assist in the detection and management of chronic disease, including cancer, cardiovascular disease and diabetes.

170.7(7) *Division of tobacco use prevention and control.* This division promotes partnerships among state government, local communities, and the people of Iowa to reduce tobacco use. The division works to reduce tobacco use and the toll of tobacco-caused disease and death by preventing youth from starting to smoke, helping adults to quit smoking, and preventing exposure to secondhand smoke.
[**ARC 8663B**, IAB 4/7/10, effective 5/12/10]

641—170.8(17A) Central office. The address of the central office is: Iowa Department of Public Health, Sixth Floor, Lucas State Office Building, Des Moines, Iowa 50319-0075. Locations of specific offices and regional offices may be obtained by writing to the department at the above address.
[**ARC 8663B**, IAB 4/7/10, effective 5/12/10]

641—170.9(17A) Business hours. The normal business hours of the department are 8 a.m. to 4:30 p.m., Monday through Friday, except legal holidays. One notable exception is the vital records section, which staffs a customer service window just inside the north entrance of the Lucas State Office Building from 7 a.m. to 4:45 p.m., Monday through Friday, except legal holidays.
[**ARC 8663B**, IAB 4/7/10, effective 5/12/10]

641—170.10(17A) Submission of materials. Requests for applications and submission of applications and other materials shall be made directly to the division of the department administering the relevant program. Any person who submits materials should enclose a cover letter which states the use for which the materials are intended. Where the administrative rules give a specific procedure, such procedure should be followed.
[**ARC 8663B**, IAB 4/7/10, effective 5/12/10]

641—170.11(17A) Requests for information. Requests for information concerning programs within the department should be addressed to the specific division of the department. General requests for information may be made to: Public Information Officer, Iowa Department of Public Health, Lucas State Office Building, Des Moines, Iowa 50319-0075. The department's home page on the Internet, www.idph.state.ia.us, also features a "contact us" option.
[**ARC 8663B**, IAB 4/7/10, effective 5/12/10]

These rules are intended to implement Iowa Code section 17A.3 and chapter 135.

[Filed 3/18/76, Notice 2/9/76—published 4/5/76, effective 5/10/76]
[Filed emergency 7/10/87—published 7/29/87, effective 7/10/87]
[Filed emergency 9/25/90—published 10/17/90, effective 9/25/90]
[Filed 1/14/91, Notice 11/14/90—published 2/6/91, effective 3/13/91]
[Filed ARC 8663B (Notice ARC 8493B, IAB 1/27/10), IAB 4/7/10, effective 5/12/10]

CHAPTER 171
PETITIONS FOR RULE MAKING
[Prior to 7/29/87, Department of Health[470] Ch 171]

641—171.1(17A) Petition for rule making.

171.1(1) Any person or agency may file a petition for rule making with the Director, Department of Public Health, Lucas State Office Building, Des Moines, Iowa 50319-0075. A petition is deemed filed when it is received by that office. The department must provide the petitioner with a file-stamped copy of the petition if the petitioner provides the agency an extra copy for this purpose. The petition must be typewritten, or legibly handwritten in ink and must substantially conform to the following form:

BEFORE THE DEPARTMENT OF PUBLIC HEALTH

Petition by (Name of Petitioner) for the (adoption, amendment, or repeal) of rules relating to (state subject matter).	PETITION FOR RULE MAKING

The petition must provide the following information:

1. A statement of the specific rule-making action sought by the petitioner including the text or a summary of the contents of the proposed rule or amendment to a rule and, if it is a petition to amend or repeal a rule, a citation and the relevant language to the particular portion or portions of the rule proposed to be amended or repealed.
2. A citation to any law deemed relevant to the department's authority to take the action urged or to the desirability of that action.
3. A brief summary of petitioner's arguments in support of the action urged in the petition.
4. A brief summary of any data supporting the action urged in the petition.
5. The names and addresses of other persons, or a description of any class of persons, known by petitioner to be affected by or interested in, the proposed action which is the subject of the petition.
6. Any request by petitioner for a meeting provided for by rule 641—171.4(17A).

171.1(2) The petition must be dated and signed by the petitioner or the petitioner's representative. It must also include the name, mailing address, and telephone number of the petitioner and petitioner's representative, and a statement indicating the person to whom communications concerning the petition should be directed.

171.1(3) The department may deny a petition because it does not substantially conform to the required form.

641—171.2(17A) Briefs. The petitioner may attach a brief to the petition in support of the action urged in the petition. The department may request a brief from the petitioner or from any other person concerning the substance of the petition.

641—171.3(17A) Inquiries. Inquiries concerning the status of a petition for rule making may be made to the Director, Department of Public Health, Lucas State Office Building, Des Moines, Iowa 50319-0075.

641—171.4(17A) Department consideration.

171.4(1) Within 14 days after the filing of a petition, the department must submit a copy of the petition and any accompanying brief to the administrative rules coordinator and to the administrative rules review committee. Upon request by petitioner in the petition, the department must schedule a brief and informal meeting between the petitioner and a member of the staff of the department, to discuss the petition. The department may request the petitioner to submit additional information or argument concerning the petition. The department may also solicit comments from any person on the substance of the petition. Also, comments on the substance of the petition may be submitted to the department by any person.

171.4(2) Within 60 days after the filing of the petition, or within any longer period agreed to by the petitioner, the department must, in writing, deny the petition, and notify petitioner of its action and the specific grounds for the denial, or grant the petition and notify petitioner that it has instituted rule-making proceedings on the subject of the petition. Petitioner shall be deemed notified of the denial or grant of the petition on the date when the department mails or delivers the required notification to petitioner.

171.4(3) Denial of a petition because it does not substantially conform to the required form does not preclude the filing of a new petition on the same subject that seeks to eliminate the grounds for the agency's rejection of the petition.

These rules are intended to implement Iowa Code chapter 17A.

[Filed 3/18/76, Notice 2/9/76—published 4/5/76, effective 5/10/76]
[Filed emergency 7/10/87—published 7/29/87, effective 7/10/87]
[Filed 5/14/99, Notice 3/24/99—published 6/2/99, effective 7/7/99]
[Filed ARC 8664B (Notice ARC 8494B, IAB 1/27/10), IAB 4/7/10, effective 5/12/10]

CHAPTER 172
DECLARATORY ORDERS

[Prior to 7/29/87, Health Department[470] Ch 172]

641—172.1(17A) Petition for declaratory order. Any person may file a petition with the department of public health for a declaratory order as to the applicability to specified circumstances of a statute, rule, or order within the primary jurisdiction of the Department of Public Health, Lucas State Office Building, Des Moines, Iowa 50319-0075. A petition is deemed filed when it is received by that office. The department shall provide the petitioner with a file-stamped copy of the petition if the petitioner provides the department an extra copy for this purpose. The petition must be typewritten or legibly handwritten in ink and must substantially conform to the following form:

BEFORE THE DEPARTMENT OF PUBLIC HEALTH

Petition by (Name of Petitioner) for a Declaratory Order on (Cite provisions of law involved).	}	PETITION FOR DECLARATORY ORDER

The petition must provide the following information:

1. A clear and concise statement of all relevant facts on which the order is requested.
2. A citation and the relevant language of the specific statutes, rules, policies, decisions, or orders, whose applicability is questioned, and any other relevant law.
3. The questions petitioner wants answered, stated clearly and concisely.
4. The answers to the questions desired by the petitioner and a summary of the reasons urged by the petitioner in support of those answers.
5. The reasons for requesting the declaratory order and disclosure of the petitioner's interest in the outcome.
6. A statement indicating whether the petitioner is currently a party to another proceeding involving the questions at issue and whether, to the petitioner's knowledge, those questions have been decided by, are pending determination by, or are under investigation by, any governmental entity.
7. The names and addresses of other persons, or a description of any class of persons, known by petitioner to be affected by, or interested in, the questions presented in the petition.
8. Any request by petitioner for a meeting provided for by 172.7(17A).

The petition must be dated and signed by the petitioner or the petitioner's representative. It must also include the name, mailing address, and telephone number of the petitioner and petitioner's representative and a statement indicating the person to whom communications concerning the petition should be directed.

641—172.2(17A) Notice of petition. Within 15 days after receipt of a petition for a declaratory order, the department shall give notice of the petition to all persons not served by the petitioner pursuant to 172.6(17A) to whom notice is required by any provision of law. The department may also give notice to any other persons.

641—172.3(17A) Intervention.

172.3(1) Persons who qualify under any applicable provision of law as an intervenor and who file a petition for intervention within 20 days of the filing of a petition for declaratory order shall be allowed to intervene in a proceeding for a declaratory order.

172.3(2) Any person who files a petition for intervention at any time prior to the issuance of an order may be allowed to intervene in a proceeding for a declaratory order at the discretion of the department.

172.3(3) A petition for intervention shall be filed at the Department of Public Health, Lucas State Office Building, Des Moines, Iowa 50319-0075. Such a petition is deemed filed when it is received by that office. The department will provide the petitioner with a file-stamped copy of the petition for

intervention if the petitioner provides an extra copy for this purpose. A petition for intervention must be typewritten or legibly handwritten in ink and must substantially conform to the following form:

BEFORE THE DEPARTMENT OF PUBLIC HEALTH

Petition by (Name of Original Petitioner) for a Declaratory Order on (Cite provisions of law cited in original petition).	PETITION FOR INTERVENTION

The petition for intervention must provide the following information:

1. Facts supporting the intervenor's standing and qualifications for intervention.
2. The answers urged by the intervenor to the question or questions presented and a summary of the reasons urged in support of those answers.
3. Reasons for requesting intervention and disclosure of the intervenor's interest in the outcome.
4. A statement indicating whether the intervenor is currently a party to any proceeding involving the questions at issue and whether, to the intervenor's knowledge, those questions have been decided by, are pending determination by, or are under investigation by, any governmental entity.
5. The names and addresses of any additional persons, or a description of any additional class of persons, known by the intervenor to be affected by, or interested in, the questions presented.
6. Whether the intervenor consents to be bound by the determination of the matters presented in the declaratory order proceeding.

The petition must be dated and signed by the intervenor or the intervenor's representative. It must also include the name, mailing address, and telephone number of the intervenor and intervenor's representative, and a statement indicating the person to whom communications should be directed.

641—172.4(17A) Briefs. The petitioner or any intervenor may file a brief in support of the position urged. The department may request a brief from the petitioner, any intervenor, or any other person concerning the questions raised.

641—172.5(17A) Inquiries. Inquiries concerning the status of a declaratory order proceeding may be made to the Director, Department of Public Health, Lucas State Office Building, Des Moines, Iowa 50319-0075.

641—172.6(17A) Service and filing of petitions and other papers.

172.6(1) *Service—when required.* Except where otherwise provided by law, every petition for declaratory order, petition for intervention, brief, or other paper filed in a proceeding for a declaratory order shall be served upon each of the parties of record to the proceeding, and on all other persons identified in the petition for declaratory order or petition for intervention as affected by or interested in the questions presented, simultaneously with their filing. The party filing a document is responsible for service on all parties and other affected or interested persons.

172.6(2) *Filing—when required.* All petitions for declaratory orders, petitions for intervention, briefs, or other papers in a proceeding for a declaratory order shall be filed with the Director, Department of Public Health, Lucas State Office Building, Des Moines, Iowa 50319-0075. All petitions, briefs, or other papers that are required to be served upon a party shall be filed simultaneously with the department.

172.6(3) *Method of service, time of filing, and proof of mailing.* Method of service, time of filing, and proof of mailing shall be as provided by 641—173.12(17A).

641—172.7(17A) Consideration. Upon request by petitioner, the department must schedule a brief and informal meeting between the original petitioner, all intervenors, and a member of the staff of the department, to discuss the questions raised. The department may solicit comments from any person on the questions raised. Also, comments on the questions raised may be submitted to the department by any person.

641—172.8(17A) Action on petition.

172.8(1) Within the time allowed by Iowa Code section 17A.9, after receipt of a petition for a declaratory order, the department or designee shall take action on the petition as required by Iowa Code section 17A.9.

172.8(2) The date of issuance of an order or of a refusal to issue an order is as defined in 641—173.2(17A).

[**ARC 8665B**, IAB 4/7/10, effective 5/12/10]

641—172.9(17A) Refusal to issue order.

172.9(1) The department shall not issue a declaratory order where prohibited by Iowa Code section 17A.9 and may refuse to issue a declaratory order on some or all questions raised for the following reasons:

1. The petition does not substantially comply with the required form.
2. The petition does not contain facts sufficient to demonstrate that the petitioner will be aggrieved or adversely affected by the failure of the department to issue an order.
3. The department does not have jurisdiction over the questions presented in the petition.
4. The questions presented by the petition are also presented in a current rule making, contested case, or other agency or judicial proceeding, that may definitively resolve them.
5. The questions presented by the petition would more properly be resolved in a different type of proceeding or by another body with jurisdiction over the matter.
6. The facts or questions presented in the petition are unclear, overbroad, insufficient, or otherwise inappropriate as a basis upon which to issue an order.
7. There is no need to issue an order because the questions raised in the petition have been settled due to a change in circumstances.
8. The petition is not based upon facts calculated to aid in the planning of future conduct but is, instead, based solely upon prior conduct in an effort to establish the effect of that conduct or to challenge an agency decision already made.
9. The petition requests a declaratory order that would necessarily determine the legal rights, duties, or responsibilities of other persons who have not joined in the petition, intervened separately, or filed a similar petition and whose position on the questions presented may fairly be presumed to be adverse to that of petitioner.
10. The petitioner requests the department to determine whether a statute is unconstitutional on its face.

172.9(2) A refusal to issue a declaratory order must indicate the specific grounds for the refusal and constitutes final agency action on the petition.

172.9(3) Refusal to issue a declaratory order pursuant to this provision does not preclude the filing of a new petition that seeks to eliminate the grounds for the refusal to issue an order.

[**ARC 8665B**, IAB 4/7/10, effective 5/12/10]

641—172.10(17A) Contents of declaratory order—effective date. In addition to the order itself, a declaratory order must contain the date of its issuance, the name of petitioner and all intervenors, the specific statutes, rules, policies, decisions, or orders involved, the particular facts upon which it is based, and the reasons for its conclusion. A declaratory order is effective on the date of issuance.

641—172.11(17A) Copies of orders. A copy of all orders issued in response to a petition for a declaratory order shall be mailed promptly to the original petitioner and all intervenors.

641—172.12(17A) Effect of a declaratory order. A declaratory order has the same status and binding effect as a final order issued in a contested case proceeding. It is binding on the department, the petitioner, and any intervenors and is applicable only in circumstances where the relevant facts and the law involved are indistinguishable from those on which the order was based. As to all other persons, a declaratory

order serves only as precedent and is not binding on the department. The issuance of a declaratory order constitutes final agency action on the petition.

These rules are intended to implement Iowa Code chapter 17A.

[Filed 3/18/76, Notice 2/9/76—published 4/5/76, effective 5/10/76]
[Filed emergency 7/10/87—published 7/29/87, effective 7/10/87]
[Filed 5/14/99, Notice 3/24/99—published 6/2/99, effective 7/7/99]
[Filed ARC 8665B (Notice ARC 8495B, IAB 1/27/10), IAB 4/7/10, effective 5/12/10]

NOTE: Editorial correction IAC 5/11/05

CHAPTER 173
CONTESTED CASES
[Prior to 7/29/87, Health Department[470] Ch 173]

641—173.1(17A) Scope and applicability. This chapter applies to contested case proceedings conducted by the department of public health.

641—173.2(17A) Definitions. Except where otherwise specifically defined by law:

"Contested case" means a proceeding defined by Iowa Code section 17A.2(5) and includes any matter defined as a no factual dispute contested case under 1998 Iowa Acts, chapter 1202, section 14.

"Issuance" means the date of mailing of a decision or order or date of delivery if service is by other means unless another date is specified in the order.

"Party" means each person or agency named or admitted as a party or properly seeking and entitled as of right to be admitted as a party.

"Presiding officer" means an administrative law judge from the department of inspections and appeals or the director of the department or the members of a multimember board or commission.

"Proposed decision" means the presiding officer's recommended findings of fact, conclusions of law, decision, and order in a contested case in which the department did not preside.

641—173.3(17A) Time requirements.

173.3(1) Time shall be computed as provided in Iowa Code subsection 4.1(34).

173.3(2) For good cause, the presiding officer may extend or shorten the time to take any action, except as precluded by statute or by rule. Except for good cause stated in the record, before extending or shortening the time to take any action, the presiding officer shall afford all parties an opportunity to be heard or to file written arguments.

641—173.4(17A) Requests for contested case proceeding. Any person claiming an entitlement to a contested case proceeding shall file a written request for such a proceeding within the time specified by the particular rules or statutes governing the subject matter or, in the absence of such law, the time specified in the agency action in question.

The request for a contested case proceeding should state the name and address of the requester, identify the specific department action which is disputed, and where the requester is represented by a lawyer identify the provisions of law or precedent requiring or authorizing the holding of a contested case proceeding in the particular circumstances involved, and include a short and plain statement of the issues of material fact in dispute.

641—173.5(17A) Notice of hearing.

173.5(1) *Delivery.* Delivery of the notice of hearing constitutes the commencement of the contested case proceeding. Delivery may be executed by:

a. Personal service as provided in the Iowa Rules of Civil Procedure; or

b. Certified mail, return receipt requested; or

c. First-class mail; or

d. Publication, as provided in the Iowa Rules of Civil Procedure.

173.5(2) *Contents.* The notice of hearing shall contain the following information:

a. A statement of the time, place, and nature of the hearing;

b. A statement of the legal authority and jurisdiction under which the hearing is to be held;

c. A reference to the particular sections of the statutes and rules involved;

d. A short and plain statement of the matters asserted. If the department or other party is unable to state the matters in detail at the time the notice is served, the initial notice may be limited to a statement of the issues involved. Thereafter, upon application, a more definite and detailed statement shall be furnished;

e. Identification of all parties including the name, address and telephone number of the person who will act as advocate for the department or the state and of parties' counsel where known;

f. Reference to the procedural rules governing conduct of the contested case proceeding;

g. Reference to the procedural rules governing informal settlement;

h. Identification of the presiding officer, if known. If not known, a description of who will serve as presiding officer; and

i. Notification of the time period in which a party may request, pursuant to 1998 Iowa Acts, chapter 1202, section 15(1), and rule 173.6(17A), that the presiding officer be an administrative law judge.

641—173.6(17A) Presiding officer.

173.6(1) Any party who wishes to request that the presiding officer assigned to render a proposed decision be an administrative law judge employed by the department of inspections and appeals must file a written request within 20 days after service of a notice of hearing which identifies or describes the presiding officer as the director of the department or members of the department.

173.6(2) The department may deny the request only upon a finding that one or more of the following apply:

a. Neither the department nor any officer of the department under whose authority the contested case is to take place is a named party to the proceeding or a real party in interest to that proceeding.

b. There is a compelling need to expedite issuance of a final decision in order to protect the public health, safety, or welfare.

c. An administrative law judge with the qualifications identified in subrule 173.6(4) is unavailable to hear the case within a reasonable time.

d. The case involves significant policy issues of first impression that are inextricably intertwined with the factual issues presented.

e. The demeanor of the witnesses is likely to be dispositive in resolving the disputed factual issues.

f. Funds are unavailable to pay the costs of an administrative law judge and an interagency appeal.

g. The request was not timely filed.

h. The request is not consistent with a specified statute.

173.6(3) The department shall issue a written ruling specifying the grounds for its decision within 20 days after a request for an administrative law judge is filed. If the ruling is contingent upon the availability of an administrative law judge with the qualifications identified in subrule 173.6(4), the parties shall be notified at least 10 days prior to hearing if a qualified administrative law judge will not be available.

173.6(4) An administrative law judge assigned to act as presiding officer in a contested case shall have the following technical expertness unless waived by the department: a J.D. degree.

173.6(5) Except as provided otherwise by another provision of law, all rulings by an administrative law judge acting as presiding officer are subject to appeal to the department. A party must seek any available intra-agency appeal in order to exhaust adequate administrative remedies.

173.6(6) Unless otherwise provided by law, the director of the department and members of multimember boards and commissions, when reviewing a proposed decision upon intra-agency appeal, shall have the powers of and shall comply with the provisions of this chapter which apply to presiding officers.

641—173.7(17A) Waiver of procedures. Unless otherwise precluded by law, the parties in a contested case proceeding may waive any provision of this chapter. However, the department in its discretion may refuse to give effect to such a waiver when it deems the waiver to be inconsistent with the public interest.

641—173.8(17A) Telephone proceedings. The presiding officer may resolve preliminary procedural motions by telephone conference in which all parties have an opportunity to participate. Other telephone proceedings may be held with the consent of all parties. The presiding officer will determine the location of the parties and witnesses for telephone hearings. The convenience of the witnesses or parties, as well as the nature of the case, will be considered when location is chosen.

641—173.9(17A) Disqualification.

173.9(1) A presiding officer or other person shall withdraw from participation in the making of any proposed or final decision in a contested case if that person:

a. Has a personal bias or prejudice concerning a party or a representative of a party;

b. Has personally investigated, prosecuted or advocated in connection with that case, the specific controversy underlying that case, another pending factually related contested case, or a pending factually related controversy that may culminate in a contested case involving the same parties;

c. Is subject to the authority, direction or discretion of any person who has personally investigated, prosecuted or advocated in connection with that contested case, the specific controversy underlying that contested case, or a pending factually related contested case or controversy involving the same parties;

d. Has acted as counsel to any person who is a private party to that proceeding within the past two years;

e. Has a personal financial interest in the outcome of the case or any other significant personal interest that could be substantially affected by the outcome of the case;

f. Has a spouse or relative within the third degree of relationship that (1) is a party to the case, or an officer, director or trustee of a party; (2) is a lawyer in the case; (3) is known to have an interest that could be substantially affected by the outcome of the case; or (4) is likely to be a material witness in the case; or

g. Has any other legally sufficient cause to withdraw from participation in the decision making in that case.

173.9(2) The term "personally investigated" means taking affirmative steps to interview witnesses directly or to obtain documents or other information directly. The term "personally investigated" does not include general direction and supervision of assigned investigators, unsolicited receipt of information which is relayed to assigned investigators, review of another person's investigative work product in the course of determining whether there is probable cause to initiate a proceeding, or exposure to factual information while performing other agency functions, including fact gathering for purposes other than investigation of the matter which culminates in a contested case. Factual information relevant to the merits of a contested case received by a person who later serves as presiding officer in that case shall be disclosed if required by Iowa Code section 17A.17 as amended by 1998 Iowa Acts, chapter 1202, section 19, and subrules 173.9(3) and 173.23(9).

173.9(3) In a situation where a presiding officer or other person knows of information which might reasonably be deemed to be a basis for disqualification and decides voluntary withdrawal is unnecessary, that person shall submit the relevant information for the record by affidavit and shall provide for the record a statement of the reasons for the determination that withdrawal is unnecessary.

173.9(4) If a party asserts disqualification on any appropriate ground, including those listed in subrule 173.9(1), the party shall file a motion supported by an affidavit pursuant to 1998 Iowa Acts, chapter 1202, section 19(7). The motion must be filed as soon as practicable after the reason alleged in the motion becomes known to the party.

If the presiding officer determines that disqualification is appropriate, the presiding officer or other person shall withdraw. If the presiding officer determines that withdrawal is not required, the presiding officer shall enter an order to that effect. A party asserting disqualification may seek an interlocutory appeal under rule 173.25(17A) and seek a stay under rule 173.29(17A).

641—173.10(17A) Consolidation—severance.

173.10(1) *Consolidation.* The presiding officer may consolidate any or all matters at issue in two or more contested case proceedings where (a) the matters at issue involve common parties or common questions of fact or law; (b) consolidation would expedite and simplify consideration of the issues involved; and (c) consolidation would not adversely affect the rights of any of the parties to those proceedings.

173.10(2) *Severance.* The presiding officer may, for good cause shown, order any contested case proceedings or portions thereof severed.

641—173.11(17A) Pleadings.

173.11(1) Pleadings may be required by rule, by the notice of hearing, or by order of the presiding officer.

173.11(2) Answer. An answer shall be filed within 20 days of service of the notice of hearing unless otherwise ordered. A party may move to dismiss or apply for a more definite and detailed statement when appropriate.

An answer shall show on whose behalf it is filed and specifically admit, deny, or otherwise answer all material allegations of the notice of hearing to which it responds. It shall state any facts deemed to show an affirmative defense and contain as many additional defenses as the pleader may claim.

An answer shall state the name, address and telephone number of the person filing the answer, the person or entity on whose behalf it is filed, and the attorney representing that person, if any.

Any allegation in the notice of hearing not denied in the answer is considered admitted. The presiding officer may refuse to consider any defense not raised in the answer which could have been raised on the basis of facts known when the answer was filed if any party would be prejudiced.

173.11(3) Amendment. Notices of hearing and answers may be amended with the consent of the parties or in the discretion of the presiding officer who may impose terms or grant a continuance.

641—173.12(17A) Service and filing of pleadings and other papers.

173.12(1) *Service—when required.* Except where otherwise provided by law, every document filed in a contested case proceeding shall be served upon each of the parties of record to the proceeding, including the person designated as prosecutor for the state or the department, simultaneously with their filing. Except for the original notice of hearing and an application for rehearing as provided in Iowa Code section 17A.16(2), the party filing a document is responsible for service on all parties.

173.12(2) *Service—how made.* Service upon a party represented by an attorney shall be made upon the attorney unless otherwise ordered. Service is made by delivery or by mailing a copy to the person's last-known address. Service by mail is complete upon mailing, except where otherwise specifically provided by statute, rule, or order.

173.12(3) *Filing—when required.* After the notice of hearing, all documents in a contested case proceeding shall be filed with the Department of Public Health, Lucas State Office Building, Des Moines, Iowa 50319-0075. All documents that are required to be served upon a party shall be filed simultaneously with the department.

173.12(4) *Filing—when made.* Except where otherwise provided by law, a document is deemed filed at the time it is delivered to the department, delivered to an established courier service for immediate delivery to that office, or mailed by first-class mail or state interoffice mail to that office, so long as there is proof of mailing.

173.12(5) *Proof of mailing.* Proof of mailing includes either: a legible United States Postal Service postmark on the envelope, a certificate of service, a notarized affidavit, or a certification in substantially the following form:

> I certify under penalty of perjury and pursuant to the laws of Iowa that, on (date of mailing), I mailed copies of (describe document) addressed to the Department of Public Health, Lucas State Office Building, Des Moines, Iowa 50319-0075, and to the names and addresses of the parties listed below by depositing the same in (a United States post office mailbox with correct postage properly affixed or state interoffice mail).
>
> (Date) (Signature)

641—173.13(17A) Discovery.

173.13(1) Discovery procedures applicable in civil actions are applicable in contested cases. Unless lengthened or shortened by these rules or by order of the presiding officer, time periods for compliance with discovery shall be as provided in the Iowa Rules of Civil Procedure.

173.13(2) Any motion relating to discovery shall allege that the moving party has previously made a good-faith attempt to resolve the discovery issues involved with the opposing party. Motions in regard to

discovery shall be ruled upon by the presiding officer. Opposing parties shall be afforded the opportunity to respond within ten days of the filing of the motion unless the time is shortened as provided in subrule 173.13(1). The presiding officer may rule on the basis of the written motion and any response, or may order argument on the motion.

173.13(3) Evidence obtained in discovery may be used in the contested case proceeding if that evidence would otherwise be admissible in that proceeding.

641—173.14(17A,135) Subpoenas.

173.14(1) *Investigatory subpoenas.*

a. The department may subpoena books, papers, records, and other real evidence which is necessary for the department to decide whether to institute a contested case proceeding. Each subpoena shall contain:

(1) The name and address of the person to whom the subpoena is directed;

(2) A description of the books, papers, records or other real evidence requested;

(3) The date, time and location for production, or inspection and copying;

(4) The time within which a motion to quash or modify the subpoena must be filed;

(5) The signature, address and telephone number of the division director or designee;

(6) The date of issuance;

(7) A return of service.

b. Any person who is aggrieved or adversely affected by compliance with the subpoena and who desires to challenge the subpoena must, within 14 days after service of the subpoena, or before the time specified for compliance if such time is less than 14 days, file with the department a motion to quash or modify the subpoena. The motion shall describe the legal reasons why the subpoena should be quashed or modified, and may be accompanied by legal briefs or factual affidavits.

c. Upon receipt of a timely motion to quash or modify a subpoena, the department may request an administrative law judge to issue a decision. Oral argument may be scheduled at the discretion of the administrative law judge. The administrative law judge may quash or modify the subpoena, deny the motion, or issue an appropriate protective order.

d. A person who is aggrieved by a ruling of an administrative law judge and who desires to challenge that ruling must appeal the ruling to the department by serving on the department director, either in person or by certified mail, a notice of appeal within ten days after service of the decision of the administrative law judge.

e. If the person contesting the subpoena is not the person under investigation, the department's decision is final for purposes of judicial review. If the person contesting the subpoena is the person under investigation, the department's decision is not final for purposes of judicial review until either (1) the person is notified the investigation has been concluded with no formal action, or (2) there is a final decision in the case.

173.14(2) *Issuance of subpoenas in a contested case.*

a. Subpoenas issued in a contested case may compel the attendance of witnesses at a deposition or hearing, and may compel the production of books, papers, records, and other real evidence. A command to produce evidence or to permit inspection may be joined with a command to appear at a deposition or hearing, or may be issued separately. Subpoenas shall be issued by the department upon written request. In the absence of good cause, a request for a subpoena must be received at least three days before the scheduled hearing.

b. A request for a subpoena shall include the following information, as applicable, unless the subpoena is requested to compel testimony or documents for rebuttal or impeachment purposes:

(1) The name, address and telephone number of the person requesting the subpoena;

(2) The name and address of the person to whom the subpoena shall be directed;

(3) The date, time and location at which the person shall be commanded to attend and give testimony;

(4) Whether the testimony is requested in connection with a deposition or hearing;

(5) A description of the books, papers, records or other real evidence requested;

(6) The date, time and location for production, or inspection and copying.

c. Each subpoena shall contain, as applicable:

(1) The caption of the case;

(2) The name, address and telephone number of the person who requested the subpoena;

(3) The name and address of the person to whom the subpoena is directed;

(4) The date, time and location at which the person is commanded to appear;

(5) Whether the testimony is commanded in connection with a deposition or hearing;

(6) A description of the books, papers, records or other real evidence the person is commanded to produce;

(7) The date, time and location for production, or inspection and copying;

(8) The time within which a motion to quash or modify the subpoena must be filed;

(9) The signature, address and telephone number of the division director or designee;

(10) The date of issuance;

(11) A return of service.

d. Unless a subpoena is requested to compel testimony or documents for rebuttal or impeachment purposes, the division director or designee shall mail copies of all subpoenas to the parties to the contested case. The person who requested the subpoena is responsible for serving the subpoena upon the subject of the subpoena.

e. Any person who is aggrieved or adversely affected by compliance with the subpoena, or any party to the contested case who desires to challenge the subpoena must, within 14 days after service of the subpoena, or before the time specified for compliance if such time is less than 14 days, file with the department a motion to quash or modify the subpoena. The motion shall describe the legal reasons why the subpoena should be quashed or modified, and may be accompanied by legal briefs or factual affidavits.

f. Upon receipt of a timely motion to quash or modify a subpoena, the department may request an administrative law judge to issue a decision. Oral argument may be scheduled at the discretion of the administrative law judge. The administrative law judge may quash or modify the subpoena, deny the motion, or issue an appropriate protective order.

g. A person who is aggrieved by a ruling of an administrative law judge and who desires to challenge that ruling must appeal the ruling to the department by serving on the department director, either in person or by certified mail, a notice of appeal within ten days after service of the decision of the administrative law judge.

641—173.15(17A) Motions.

173.15(1) No technical form for motions is required. However, prehearing motions must be in writing, state the grounds for relief, and state the relief sought.

173.15(2) Any party may file a written response to a motion within ten days after the motion is served. The presiding officer may consider a failure to respond within the required time period in ruling on a motion.

173.15(3) The presiding officer may schedule oral argument on any motion.

173.15(4) Motions pertaining to the hearing, except motions for summary judgment, must be filed and served at least ten days prior to the date of hearing unless there is good cause for permitting later action or the time for such action is lengthened or shortened by an order of the presiding officer.

173.15(5) Motions for summary judgment. Motions for summary judgment shall comply with the requirements of Iowa Rule of Civil Procedure 237 and shall be subject to disposition according to the requirements of that rule to the extent such requirements are not inconsistent with the provisions of this rule or any other provision of law governing the procedure in contested cases.

Motions for summary judgment must be filed and served at least 45 days prior to the scheduled hearing date, or other time period determined by the presiding officer. Any party resisting the motion shall file and serve a resistance within 15 days, unless otherwise ordered by the presiding officer, from the date a copy of the motion was served. The time fixed for hearing or nonoral submission shall be not less than 20 days after the filing of the motion, unless a shorter time is ordered by the presiding officer.

A summary judgment order rendered on all issues in a contested case is subject to rehearing pursuant to 173.28(17A) and appeal pursuant to 173.27(17A).

641—173.16(17A) Prehearing conference.

173.16(1) Any party may request a prehearing conference. A written request for prehearing conference or an order for prehearing conference on the presiding officer's own motion shall be filed not less than seven days prior to the hearing date. A prehearing conference shall be scheduled not less than three business days prior to the hearing date.

Written notice of the prehearing conference shall be given by the presiding officer to all parties. For good cause the presiding officer may permit variances from this rule.

173.16(2) Each party shall bring to the prehearing conference:

a. A final list of the witnesses who the party anticipates will testify at hearing. Witnesses not listed may be excluded from testifying unless there was good cause for the failure to include their names; and

b. A final list of exhibits which the party anticipates will be introduced at hearing. Exhibits other than rebuttal exhibits that are not listed may be excluded from admission into evidence unless there was good cause for the failure to include them.

c. Witness or exhibit lists may be amended subsequent to the prehearing conference within the time limits established by the presiding officer at the prehearing conference. Any such amendments must be served on all parties.

173.16(3) In addition to the requirements of subrule 173.16(2), the parties at a prehearing conference may:

a. Enter into stipulations of law or fact;

b. Enter into stipulations on the admissibility of exhibits;

c. Identify matters which the parties intend to request be officially noticed;

d. Enter into stipulations for waiver of any provision of law; and

e. Consider any additional matters which will expedite the hearing.

173.16(4) Prehearing conferences shall be conducted by telephone unless otherwise ordered. Parties shall exchange and receive witness and exhibit lists in advance of a telephone prehearing conference.

641—173.17(17A) Continuances. Applications for continuances shall be made to the presiding officer.

173.17(1) A written application for a continuance shall:

a. Be made at the earliest possible time and no less than seven days before the hearing except in case of unanticipated emergencies;

b. State the specific reasons for the request; and

c. Be signed by the requesting party or the party's representative.

173.17(2) In determining whether to grant a continuance, the presiding officer may consider:

a. Prior continuances;

b. The interests of all parties;

c. The likelihood of informal settlement;

d. The existence of an emergency;

e. Any objection;

f. Any applicable time requirements;

g. The existence of a conflict in the schedules of counsel, parties, or witnesses;

h. The timeliness of the request; and

i. Other relevant factors.

The presiding officer may require documentation of any grounds for continuance.

641—173.18(17A) Withdrawals. A party requesting a contested case proceeding may withdraw that request prior to the hearing only in accordance with department rules. Unless otherwise provided, a withdrawal shall be with prejudice.

641—173.19(17A) Intervention.

173.19(1) *Motion.* A motion for leave to intervene in a contested case proceeding shall state the grounds for the proposed intervention, the position and interest of the proposed intervenor, and the possible impact of intervention on the proceeding. A proposed answer or petition in intervention shall be attached to the motion. Any party may file a response within 14 days of service of the motion to intervene unless the time period is extended or shortened by the presiding officer.

173.19(2) *When filed.* Motion for leave to intervene shall be filed as early in the proceeding as possible to avoid adverse impact on existing parties or the conduct of the proceeding. Unless otherwise ordered, a motion for leave to intervene shall be filed before the prehearing conference, if any, or at least 20 days before the date scheduled for hearing. Any later motion must contain a statement of good cause for the failure to file in a timely manner. Unless inequitable or unjust, an intervenor shall be bound by any agreement, arrangement, or other matter previously raised in the case. Requests by untimely intervenors for continuances which would delay the proceeding will ordinarily be denied.

173.19(3) *Grounds for intervention.* The movant shall demonstrate that (a) intervention would not unduly prolong the proceedings or otherwise prejudice the rights of existing parties; (b) the movant is likely to be aggrieved or adversely affected by a final order in the proceeding; and (c) the interests of the movant are not adequately represented by existing parties.

173.19(4) *Effect of intervention.* If appropriate, the presiding officer may order consolidation of the petitions and briefs of different parties whose interests are aligned with each other and limit the number of representatives allowed to participate actively in the proceedings. A person granted leave to intervene is a party to the proceeding. The order granting intervention may restrict the issues that may be raised by the intervenor or otherwise condition the intervenor's participation in the proceeding.

641—173.20(17A) Hearing procedures.

173.20(1) The presiding officer presides at the hearing, and may rule on motions, require briefs, issue a proposed decision, and issue such orders and rulings as will ensure the orderly conduct of the proceedings.

173.20(2) All objections shall be timely made and stated on the record.

173.20(3) Parties have the right to participate or to be represented in all hearings or prehearing conferences related to their case. Partnerships, corporations, or associations may be represented by any member, officer, director, or duly authorized agent. Any party may be represented by an attorney or another person authorized by law.

173.20(4) Subject to terms and conditions prescribed by the presiding officer, parties have the right to introduce evidence on issues of material fact, cross-examine witnesses present at the hearing as necessary for a full and true disclosure of the facts, present evidence in rebuttal, and submit briefs and engage in oral argument.

173.20(5) The presiding officer shall maintain the decorum of the hearing and may refuse to admit or may expel anyone whose conduct is disorderly.

173.20(6) Witnesses may be sequestered during the hearing.

173.20(7) The presiding officer shall conduct the hearing in the following manner:

a. The presiding officer shall give an opening statement briefly describing the nature of the proceedings;

b. The parties shall be given an opportunity to present opening statements;

c. Parties shall present their cases in the sequence determined by the presiding officer;

d. Each witness shall be sworn or affirmed by the presiding officer or the court reporter, and be subject to examination and cross-examination. The presiding officer may limit questioning in a manner consistent with law;

e. When all parties and witnesses have been heard, parties may be given the opportunity to present final arguments.

641—173.21(17A) Evidence.

173.21(1) The presiding officer shall rule on admissibility of evidence and may, where appropriate, take official notice of facts in accordance with all applicable requirements of law.

173.21(2) Stipulation of facts is encouraged. The presiding officer may make a decision based on stipulated facts.

173.21(3) Evidence in the proceeding shall be confined to the issues as to which the parties received notice prior to the hearing unless the parties waive their right to such notice or the presiding officer determines that good cause justifies expansion of the issues. If the presiding officer decides to admit evidence on issues outside the scope of the notice over the objection of a party who did not have actual notice of those issues, that party, upon timely request, shall receive a continuance sufficient to amend pleadings and to prepare on the additional issue.

173.21(4) The party seeking admission of an exhibit must provide opposing parties with an opportunity to examine the exhibit prior to the ruling on its admissibility. Copies of documents should normally be provided to opposing parties.

All exhibits admitted into evidence shall be appropriately marked and be made part of the record.

173.21(5) Any party may object to specific evidence or may request limits on the scope of any examination or cross-examination. Such an objection shall be accompanied by a brief statement of the grounds upon which it is based. The objection, the ruling on the objection, and the reasons for the ruling shall be noted in the record. The presiding officer may rule on the objection at the time it is made or may reserve a ruling until the written decision.

173.21(6) Whenever evidence is ruled inadmissible, the party offering that evidence may submit an offer of proof on the record. The party making the offer of proof for excluded oral testimony shall briefly summarize the testimony or, with permission of the presiding officer, present the testimony. If the excluded evidence consists of a document or exhibit, it shall be marked as part of an offer of proof and inserted in the record.

641—173.22(17A) Default.

173.22(1) If a party fails to appear or participate in a contested case proceeding after proper service of notice, the presiding officer may, if no adjournment is granted, enter a default decision or proceed with the hearing and render a decision in the absence of the party.

173.22(2) Where appropriate and not contrary to law, any party may move for default against a party who has requested the contested case proceeding and has failed to file a required pleading or has failed to appear after proper service.

173.22(3) Default decisions or decisions rendered on the merits after a party has failed to appear or participate in a contested case proceeding become final agency action unless, within 15 days after the date of notification or mailing of the decision, a motion to vacate is filed and served on all parties or an appeal of a decision on the merits is timely initiated within the time provided by rule 173.27(17A). A motion to vacate must state all facts relied upon by the moving party which establish that good cause existed for that party's failure to appear or participate at the contested case proceeding. Each fact so stated must be substantiated by at least one sworn affidavit of a person with personal knowledge of each such fact, which affidavit(s) must be attached to the motion.

173.22(4) The time for further appeal of a decision for which a timely motion to vacate has been filed is stayed pending a decision on the motion to vacate.

173.22(5) Properly substantiated and timely filed motions to vacate shall be granted only for good cause shown. The burden of proof as to good cause is on the moving party. Adverse parties shall have ten days to respond to a motion to vacate. Adverse parties shall be allowed to conduct discovery as to the issue of good cause and to present evidence on the issue prior to a decision on the motion, if a request to do so is included in that party's response.

173.22(6) "Good cause" for purposes of this rule shall have the same meaning as "good cause" for setting aside a default judgment under Iowa Rule of Civil Procedure 236.

173.22(7) A decision denying a motion to vacate is subject to further appeal within the time limit allowed for further appeal of a decision on the merits in the contested case proceeding. A decision

granting a motion to vacate is subject to interlocutory appeal by the adverse party pursuant to rule 173.25(17A).

173.22(8) If a motion to vacate is granted and no timely interlocutory appeal has been taken, the presiding officer shall issue another notice of hearing and the contested case shall proceed accordingly.

173.22(9) A default decision may award any relief consistent with the request for relief made in the petition and embraced in its issues (but, unless the defaulting party has appeared, it cannot exceed the relief demanded).

173.22(10) A default decision may provide either that the default decision is to be stayed pending a timely motion to vacate or that the default decision is to take effect immediately, subject to a request for stay under rule 173.29(17A).

641—173.23(17A) Ex parte communication.

173.23(1) Prohibited communications. Unless required for the disposition of ex parte matters specifically authorized by statute, following issuance of the notice of hearing, there shall be no communication, directly or indirectly, between the presiding officer and any party or representative of any party or any other person with a direct or indirect interest in such case in connection with any issue of fact or law in the case except upon notice and opportunity for all parties to participate. This does not prohibit persons jointly assigned such tasks from communicating with each other. Nothing in this provision is intended to preclude the presiding officer from communicating with members of the department or seeking the advice or help of persons other than those with a personal interest in, or those engaged in personally investigating as defined in subrule 173.9(2), prosecuting, or advocating in, either the case under consideration or a pending factually related case involving the same parties as long as those persons do not directly or indirectly communicate to the presiding officer any ex parte communications they have received of a type that the presiding officer would be prohibited from receiving or that furnish, augment, diminish, or modify the evidence in the record.

173.23(2) Prohibitions on ex parte communications commence with the issuance of the notice of hearing in a contested case and continue for as long as the case is pending.

173.23(3) Written, oral or other forms of communication are "ex parte" if made without notice and opportunity for all parties to participate.

173.23(4) To avoid prohibited ex parte communications, notice must be given in a manner reasonably calculated to give all parties a fair opportunity to participate. Notice of written communications shall be provided in compliance with rule 173.12(17A) and may be supplemented by telephone, facsimile, electronic mail or other means of notification. Where permitted, oral communications may be initiated through conference telephone call including all parties or their representatives.

173.23(5) Persons who jointly act as presiding officer in a pending contested case may communicate with each other without notice or opportunity for parties to participate.

173.23(6) The division director or other persons may be present in deliberations or otherwise advise the presiding officer without notice or opportunity for parties to participate as long as they are not disqualified from participating in the making of a proposed or final decision under any provision of law and they comply with subrule 173.23(1).

173.23(7) Communications with the presiding officer involving uncontested scheduling or procedural matters do not require notice or opportunity for parties to participate. Parties should notify other parties prior to initiating such contact with the presiding officer when feasible, and shall notify other parties when seeking to continue hearings or other deadlines pursuant to rule 173.17(17A).

173.23(8) Disclosure of prohibited communications. A presiding officer who receives a prohibited ex parte communication during the pendency of a contested case must initially determine if the effect of the communication is so prejudicial that the presiding officer should be disqualified. If the presiding officer determines that disqualification is warranted, a copy of any prohibited written communication, all written responses to the communication, a written summary stating the substance of any prohibited oral or other communication not available in written form for disclosure, all responses made, and the identity of each person from whom the presiding officer received a prohibited ex parte communication

shall be submitted for inclusion in the record under seal by protective order (or disclosed). If the presiding officer determines that disqualification is not warranted, such documents shall be submitted for inclusion in the record and served on all parties. Any party desiring to rebut the prohibited communication must be allowed the opportunity to do so upon written request filed within ten days after notice of the communication.

173.23(9) Promptly after being assigned to serve as presiding officer at any stage in a contested case proceeding, a presiding officer shall disclose to all parties material factual information received through ex parte communication prior to such assignment unless the factual information has already been or shortly will be disclosed pursuant to Iowa Code section 17A.13(2) or through discovery. Factual information contained in an investigative report or similar document need not be separately disclosed by the presiding officer as long as such documents have been or will shortly be provided to the parties.

173.23(10) The presiding officer may render a proposed or final decision imposing appropriate sanctions for violations of this rule including default, a decision against the offending party, censure, or suspension or revocation of the privilege to practice before the department. Violation of ex parte communication prohibitions by department personnel shall be reported to the director for possible sanctions including censure, suspension, dismissal, or other disciplinary action.

641—173.24(17A) Recording costs. Upon request, the department shall provide a copy of the whole or any portion of the record at cost. The cost of preparing a copy of the record or of transcribing the hearing record shall be paid by the requesting party. Parties who request that a hearing be recorded by certified shorthand reporters rather than by electronic means shall bear the cost of that recordation, unless otherwise provided by law.

641—173.25(17A) Interlocutory appeals. Upon written request of a party or on its own motion, the director or board or commission may review an interlocutory order of the presiding officer. In determining whether to do so, the director or board or commission shall weigh the extent to which its granting the interlocutory appeal would expedite final resolution of the case and the extent to which review of that interlocutory order by the department at the time it reviews the proposed decision of the presiding officer would provide an adequate remedy. Any request for interlocutory review must be filed within 14 days of issuance of the challenged order, but no later than the time for compliance with the order or the date of hearing, whichever is first.

641—173.26(17A) Final decision.

173.26(1) When the director of the department presides over the reception of evidence at the hearing, the decision is a final decision.

173.26(2) When the director of the department does not preside at the reception of evidence, the presiding officer shall make a proposed decision. The proposed decision becomes the final decision of the department without further proceedings unless there is an appeal to, or review on motion of, the department within the time provided in rule 173.27(17A).

641—173.27(17A) Appeals and review.

173.27(1) *Appeal by party.* Any adversely affected party may appeal a proposed decision to the director within 30 days after issuance of the proposed decision.

173.27(2) *Review.* The director may initiate review of a proposed decision on its own motion at any time within 30 days following the issuance of such a decision.

173.27(3) *Notice of appeal.* An appeal of a proposed decision is initiated by filing a timely notice of appeal with the department. The notice of appeal must be signed by the appealing party or a representative of that party and contain a certificate of service. The notice shall specify:

a. The parties initiating the appeal;

b. The proposed decision or order appealed from;

c. The specific findings or conclusions to which exception is taken and any other exceptions to the decision or order;

d. The relief sought;

e. The grounds for relief.

173.27(4) *Requests to present additional evidence.* A party may request the taking of additional evidence only by establishing that the evidence is material, that good cause existed for the failure to present the evidence at the hearing, and that the party has not waived the right to present the evidence. A written request to present additional evidence must be filed with the notice of appeal or, by a nonappealing party, within 14 days of service of the notice of appeal. The director may remand a case to the presiding officer for further hearing or the director may preside at the taking of additional evidence.

173.27(5) *Scheduling.* The department shall issue a schedule for consideration of the appeal.

173.27(6) *Briefs and arguments.* Unless otherwise ordered, within 20 days of the notice of appeal or order for review, each appealing party may file exceptions and briefs. Within 20 days thereafter, any party may file a responsive brief. Briefs shall cite any applicable legal authority and specify relevant portions of the record in that proceeding. Written requests to present oral argument shall be filed with the briefs.

The director may resolve the appeal on the briefs or provide an opportunity for oral argument. The director may shorten or extend the briefing period as appropriate.

641—173.28(17A) Applications for rehearing.

173.28(1) *By whom filed.* Any party to a contested case proceeding may file an application for rehearing from a final order.

173.28(2) *Content of application.* The application for rehearing shall state on whose behalf it is filed, the specific grounds for rehearing, and the relief sought. In addition, the application shall state whether the applicant desires reconsideration of all or part of the department decision on the existing record and whether, on the basis of the grounds enumerated in subrule 173.27(4), the applicant requests an opportunity to submit additional evidence.

173.28(3) *Time of filing.* The application shall be filed with the department within 20 days after issuance of the final decision.

173.28(4) *Notice to other parties.* A copy of the application shall be timely mailed by the applicant to all parties of record not joining therein. If the application does not contain a certificate of service, the department shall serve copies on all parties.

173.28(5) *Disposition.* Any application for a rehearing shall be deemed denied unless the department grants the application within 20 days after its filing.

641—173.29(17A) Stays of department actions.

173.29(1) *When available.*

a. Any party to a contested case proceeding may petition the department for a stay of an order issued in that proceeding or for other temporary remedies, pending review by the department. The petition shall be filed with the notice of appeal and shall state the reasons justifying a stay or other temporary remedy. The director may rule on the stay or authorize the presiding officer to do so.

b. Any party to a contested case proceeding may petition the department for a stay or other temporary remedies pending judicial review of all or part of that proceeding. The petition shall state the reasons justifying a stay or other temporary remedy.

173.29(2) *When granted.* In determining whether to grant a stay, the presiding officer or the board, commission, or director, as appropriate, shall consider the factors listed in 1998 Iowa Acts, chapter 1202, section 23(5c).

173.29(3) *Vacation.* A stay may be vacated by the issuing authority upon application of the department or any other party.

641—173.30(17A) No factual dispute contested cases. If the parties agree that no dispute of material fact exists as to a matter that would be a contested case if such a dispute of fact existed, the parties may present all relevant admissible evidence either by stipulation or otherwise as agreed by the parties, without necessity for the production of evidence at an evidentiary hearing. If such agreement is reached,

a jointly submitted schedule detailing the method and timetable for submission of the record, briefs and oral argument should be submitted to the presiding officer for approval as soon as practicable. If the parties cannot agree, any party may file and serve a motion for summary judgment pursuant to the rules governing such motions.

641—173.31(17A) Emergency adjudicative proceedings.

173.31(1) *Necessary emergency action.* To the extent necessary to prevent or avoid immediate danger to the public health, safety, or welfare and, consistent with the Constitution and other provisions of law, the department may issue a written order in compliance with Iowa Code section 17A.18 to suspend a license in whole or in part, order the cessation of any continuing activity, order affirmative action, or take other action within the jurisdiction of the department by emergency adjudicative order. Before issuing an emergency adjudicative order the department shall consider factors including, but not limited to, the following:

a. Whether there has been a sufficient factual investigation to ensure that the department is proceeding on the basis of reliable information;

b. Whether the specific circumstances which pose immediate danger to the public health, safety or welfare have been identified and determined to be continuing;

c. Whether the person required to comply with the emergency adjudicative order may continue to engage in other activities without posing immediate danger to the public health, safety or welfare;

d. Whether imposition of monitoring requirements or other interim safeguards would be sufficient to protect the public health, safety or welfare; and

e. Whether the specific action contemplated by the department is necessary to avoid the immediate danger.

173.31(2) *Issuance of order.*

a. An emergency adjudicative order shall contain findings of fact, conclusions of law, and policy reasons to justify the determination of an immediate danger in the department's decision to take immediate action.

b. The written emergency adjudicative order shall be immediately delivered to persons who are required to comply with the order by utilizing one or more of the following procedures:

(1) Personal delivery;

(2) Certified mail, return receipt requested, to the last address on file with the department;

(3) Certified mail to the last address on file with the department;

(4) First-class mail to the last address on file with the department; or

(5) Fax. Fax may be used as the sole method of delivery if the person required to comply with the order has filed a written request that department orders be sent by fax and has provided a fax number for that purpose.

c. To the degree practicable, the department shall select the procedure for providing written notice that best ensures prompt, reliable delivery.

173.31(3) *Oral notice.* Unless the written emergency adjudicative order is provided by personal delivery on the same day that the order issues, the department shall make reasonable immediate efforts to contact by telephone the persons who are required to comply with the order.

173.31(4) *Completion of proceedings.* After the issuance of an emergency adjudicative order, the department shall proceed as quickly as feasible to complete any proceedings that would be required if the matter did not involve an immediate danger.

Issuance of a written emergency adjudicative order shall include notification of the date on which department proceedings are scheduled for completion. After issuance of an emergency adjudicative order, continuance of further department proceedings to a later date will be granted only in compelling circumstances upon application in writing.

These rules are intended to implement Iowa Code chapter 17A as amended by 1998 Iowa Acts, chapter 1202.

[Filed 3/18/76, Notice 2/9/76—published 4/5/76, effective 5/10/76]
[Filed 4/14/78, Notice 12/28/77—published 5/3/78, effective 6/7/78]

[Filed emergency 7/29/83—published 8/17/83, effective 7/29/83]
[Filed emergency 7/1/86—published 7/16/86, effective 7/1/86][1]
[Filed emergency 9/19/86—published 10/8/86, effective 9/19/86]
[Filed emergency 7/10/87—published 7/29/87, effective 7/10/87]
[Filed 9/14/92, Notice 7/8/92—published 9/30/92, effective 11/4/92]
[Filed 3/4/94, Notice 1/5/94—published 3/30/94, effective 5/4/94]
[Filed 5/14/99, Notice 3/24/99—published 6/2/99, effective 7/7/99]
[Filed 7/13/07, Notice 4/11/07—published 8/1/07, effective 9/5/07]

[1] See IAB, Inspections and Appeals Department.

CHAPTER 174
AGENCY PROCEDURE FOR RULE MAKING

The department of public health adopts the agency procedure for rule making segment of the Uniform Administrative Rules which is printed in the first volume of the Iowa Administrative Code with the following amendments.

641—174.3(17A) Public rule-making docket.

174.3(2) *Anticipated rule making.* In lieu of the words "(commission, board, council, director)" insert "director".

641—174.4(17A) Notice of proposed rule making.

174.4(3) *Notices mailed.* In lieu of the words "(specify time period)" insert "one calendar year".

641—174.5(17A) Public participation.

174.5(1) *Written comments.* In lieu of the words "(identify office and address) or" insert "Director's Office, Iowa Department of Public Health, Lucas State Office Building, 321 E. 12th Street, Des Moines, Iowa 50319".

174.5(5) *Accessibility.* In lieu of the words "(designate office and telephone number)" insert "Director's Office, Iowa Department of Public Health, (515)281-7689".

641—174.6(17A) Regulatory flexibility analysis.

174.6(3) *Mailing list.* In lieu of the words "(designate office)" insert "Director's Office, Department of Public Health, Lucas State Office Building, Des Moines, Iowa 50319".

641—174.11(17A) Concise statement of reasons.

174.11(1) *General.* In lieu of the words "(specify the office and address)" insert "Director's Office, Department of Public Health, Lucas State Office Building, Des Moines, Iowa 50319".

641—174.13(17A) Agency rule-making record.

174.13(2) *Contents.* Amend paragraph *"c"* by inserting "director" in lieu of "(agency head)".

These rules are intended to implement Iowa Code section 17A.4 and Iowa Code chapter 135.

[Filed 9/13/91, Notice 8/7/91—published 10/2/91, effective 11/6/91]
[Filed 11/19/01, Notice 8/22/01—published 12/12/01, effective 1/16/02]

CHAPTER 175
FAIR INFORMATION PRACTICES AND PUBLIC RECORDS

641—175.1(17A,22) Definitions. For purposes of this chapter, the following definitions apply:

"Agency" or *"department"* means the Iowa department of public health.

"Confidential record" means a record which is not available as a matter of right for examination and copying by members of the public under applicable provisions of law. Confidential records include records or information contained in records that the department is prohibited by law from making available for examination by members of the public, and records or information contained in records that are specified as confidential by Iowa Code section 22.7, or other provision of law, but that may be disclosed upon order of a court, the lawful custodian of the record, or by another person duly authorized to release the record. Mere inclusion in a record of information declared confidential by an applicable provision of law does not necessarily make that entire record a confidential record.

"Custodian" means the department or a person lawfully delegated authority by the department to act for the department in implementing Iowa Code chapter 22.

"Open record" means a record other than a confidential record.

"Personally identifiable information" means information about or pertaining to an individual in a record which identifies the individual and which is contained in a record system.

"Record" means the whole or a part of a "public record" as defined in Iowa Code section 22.1 that is owned by or in the physical possession of the department.

"Record system" means any group of records under the control of the department from which a record may be retrieved by a personal identifier such as the name of an individual, number, symbol, or other unique retriever assigned to an individual.

641—175.2(17A,22) Statement of policy. The purpose of this chapter is to facilitate broad public access to open records and to facilitate sound department determinations with respect to the maintenance of confidential records and the implementation of the fair information practices Act. The department is committed to the policies set forth in Iowa Code chapter 22, and department staff shall cooperate with members of the public in implementing the provisions of that chapter.

641—175.3(17A,22) Requests for access to records.

175.3(1) *Location of record.* A request for access to a record should be directed to the division where the record is maintained. If the location of the record is not known by the requester, the request shall be directed to the Iowa Department of Public Health, Public Information Officer, Lucas State Office Building, Des Moines, Iowa 50319-0075, Attention: Record Request. The department will forward the request to the appropriate person.

175.3(2) *Office hours.* Open records shall be made available during all customary office hours, which are 8 a.m. to 4:30 p.m. daily, excluding Saturdays, Sundays and legal holidays.

175.3(3) *Request for access.* Requests for access to open records may be made in writing, in person, by telephone, or by electronic means. A person requesting a record shall identify the particular record sought by name or description in order to facilitate the location of the record. A person requesting a record by mail, telephone, or by electronic means shall include the name, address, and telephone number of the person requesting the information in order to facilitate delivery of the record. A person shall not be required to give a reason for requesting an open record.

175.3(4) *Response to requests.* The custodian shall provide prompt access to an open record upon request unless the size or nature of the request makes prompt access infeasible. If the size or nature of the request for access to an open record requires time for compliance, the custodian shall comply with the request as soon as feasible. The custodian may delay access to an open record for one of the purposes authorized by Iowa Code section 22.8(4) or 22.10(4). The custodian shall promptly give notice to the requester of the reason for any delay in access to an open record and an estimate of the length of that delay and, upon request, shall promptly provide that notice to the requester in writing.

The custodian of a record may deny access to the record by members of the public only on the grounds that such a denial is warranted under Iowa Code sections 22.8(4) and 22.10(4), or that it is a confidential record, or that its disclosure is prohibited by a court order.

175.3(5) *Security of record.* No person may, without permission from the custodian, search or remove any record from the department files. The custodian or a designee of the custodian shall supervise examination and copying of department records. Records shall be protected from damage and disorganization.

175.3(6) *Copying.* A reasonable number of copies of an open record may be made in the department's office. If photocopy equipment is not available in the department office where an open record is kept, the custodian shall permit its examination in that office and shall arrange to have copies promptly made elsewhere.

175.3(7) *Fees.*

a. When charged. The department may charge a reasonable fee in connection with the examination or copying of records. To the extent permitted by applicable provisions of law, the payment of fees may be waived when the imposition of fees is inequitable or when a waiver is in the public interest.

b. Copying and postage costs. Price schedules for published materials and for photocopies of records supplied by the department shall be prominently posted in department offices. Copies of records may be made by or for members of the public on department photocopy machines or from electronic storage systems at cost as determined and posted in department offices by the custodian. When the mailing of copies of records is requested, the actual costs of such mailing may also be charged to the requester.

c. Search and supervisory fee. An hourly fee may be charged for actual department expenses in searching for and supervising the examination and copying of requested records. The fee shall be based upon the actual costs incurred. The department shall post the hourly fees to be charged in routine cases for search and supervision of records. Except as provided in Iowa Code section 144.46, no fee shall be charged if the records are not made available for inspection, or if the time required does not exceed one hour in duration, or if the time required for the search was the result of department error or record-keeping problems. Iowa Code section 144.46 specifically allows for fees for vital record searches when the record is not copied or is not found, and this Iowa Code section is implemented by 641—96.4(144).

d. Advance deposits.

(1) Fulfillment of a request for a copy of a public record may be contingent upon receipt of payment of expenses to be incurred in fulfilling the request, and such estimated expenses shall be communicated to the requester prior to fulfillment of the request. When the estimated total fee chargeable under this subrule exceeds $25, the custodian may require a requester to make an advance payment to cover all or a part of the estimated fee.

(2) When a requester has previously failed to pay a fee chargeable under this subrule, the custodian may require payment of the prior fee and advance payment of the full amount of any estimated fee before the custodian processes a new request from that requester.

641—175.4(17A,22) Access to confidential records. Under Iowa Code section 22.7 or other applicable provisions of law, the lawful custodian may disclose certain confidential records to particular persons under certain limited circumstances if the person is legally entitled to the record. In requesting the custodian to permit the examination and copying of such a confidential record, the following procedures apply and are in addition to those specified for requests for access to records in rule 175.3(17A,22).

175.4(1) *Proof of identity.* A person requesting access to a confidential record may be required to provide proof of identity or authority to secure access to the record.

175.4(2) *Requests.* The custodian may require a request to examine and copy a confidential record to be in writing. A person requesting access to such a record may be required to sign a certified statement or affidavit enumerating the specific reasons justifying access to the confidential record and to provide any proof necessary to establish relevant facts.

175.4(3) *Notice to subject of record and opportunity to obtain injunction.* After the custodian receives a request for access to a confidential record, and before the custodian releases such a record,

the custodian may make reasonable efforts to notify promptly any person who is a subject of that record, is identified in that record, and whose address or telephone number is contained in that record. To the extent such a delay is practicable and in the public interest, the custodian may give the subject of such confidential record to whom notification is transmitted a reasonable opportunity to seek an injunction under Iowa Code section 22.8, and indicate to the subject of the record the specific period of time during which disclosure will be delayed for that purpose. The department is not required to provide notification or an opportunity to seek an injunction under this subrule and retains sole discretion as to whether to pursue such action.

175.4(4) *Requests denied.* When the custodian denies a request for access to a confidential record, the custodian shall promptly notify the requester. If the requester indicates to the custodian that a written notification of the denial is desired, the custodian shall promptly provide such a notification that is signed by the custodian and that includes:

a. The name and title or position of the custodian responsible for the denial; and

b. A citation to the provision of law vesting authority in the custodian to deny disclosure of the record and a brief statement of the reasons for the denial.

175.4(5) *Request granted.* When the custodian grants a request for access to a confidential record to a particular person, the custodian shall notify that person and indicate any lawful restrictions imposed by the custodian on that person's examination and copying of the record.

641—175.5(17A,22) Requests for treatment of a record as a confidential record and its withholding from examination. The custodian may treat a record as a confidential record and withhold it from examination only to the extent that the custodian is authorized by Iowa Code section 22.7, another applicable provision of law, or a court order to refuse to disclose that record to members of the public.

175.5(1) *Persons who may request.* Any person who would be aggrieved or adversely affected by disclosure of a record and who asserts that Iowa Code section 22.7, another applicable provision of law, or a court order authorizes the custodian to treat the record as a confidential record may request the custodian to treat that record as a confidential record and to withhold it from public inspection.

175.5(2) *Request.* A request that a record be treated as a confidential record and be withheld from public inspection shall be in writing and shall be filed with the custodian. The request must set forth the legal and factual basis justifying such confidential treatment for that record, and the name, address, and telephone number of the person authorized to respond to any inquiry or action of the custodian concerning the request. A person requesting treatment of a record as a confidential record may also be required to sign a certified statement or affidavit enumerating the specific reasons justifying the treatment of that record as a confidential record and to provide any proof necessary to establish relevant facts. Requests for treatment of a record as a confidential record for a limited time period shall also specify the precise period of time for which that treatment is requested.

A person filing such a request shall, if possible, accompany the request with a copy of the record in question from which those portions for which such confidential record treatment has been requested have been deleted. If the original record is being submitted to the department by the person requesting such confidential treatment at the time the request is filed, the person shall indicate conspicuously on the original record that all or portions of it are confidential.

175.5(3) *Failure to request.* Failure of a person to request confidential record treatment for a record does not preclude the custodian from treating it as a confidential record. However, if a person who has submitted business information to the department does not request that it be withheld from public inspection under Iowa Code sections 22.7(3) and 22.7(6), the custodian of records containing that information may proceed as if that person has no objection to its disclosure to members of the public.

175.5(4) *Timing of decision.* A decision by the custodian with respect to the disclosure of a record to members of the public may be made when a request for its treatment as a confidential record is filed or when the custodian receives a request for access to the record by a member of the public.

175.5(5) *Request granted or deferred.* If a request for such confidential record treatment is granted, or if action on such a request is deferred, a copy of the record from which the matter in question has been deleted and a copy of the decision to grant the request or to defer action upon the request will be made

available for public inspection in lieu of the original record. If the custodian subsequently receives a request for access to the original record, the custodian will make reasonable and timely efforts to notify any person who has filed a request for its treatment as a confidential record that is not available for public inspection of the pendency of that subsequent request.

175.5(6) *Request denied and opportunity to seek injunction.* If a request that a record be treated as a confidential record and be withheld from public inspection is denied, the custodian shall notify the requester in writing of that determination and the reasons therefor. On application by a requester, the custodian may engage in a good faith, reasonable delay in allowing examination of the record so that the requester may seek injunctive relief under the provisions of Iowa Code section 22.8 or other applicable provision of law. However, such a record shall not be withheld from public inspection for any period of time if the custodian determines that the requester had no reasonable ground to justify the treatment of that record as a confidential record. The custodian shall notify requester in writing of the time period allowed to seek injunctive relief or the reasons for the determination that no reasonable grounds exist to justify the treatment of that record as a confidential record. The custodian may extend the period of good faith, reasonable delay in allowing examination of the record so that the requester may seek injunctive relief only if no request for examination of that record has been received, or if a court directs the custodian to treat it as a confidential record, or to the extent permitted by another applicable provision of law, or with the consent of the person requesting access.

641—175.6(17A,22) Procedure by which additions, dissents, or objections may be entered into certain records. Except as otherwise provided by law, a person may file a request with the custodian to review, and to have a written statement of additions, dissents, or objections entered into a record containing personally identifiable information pertaining to that person. However, a person who is a subject of such a record shall not be authorized to alter the original copy of that record or to expand the official record of any agency proceeding. A requester shall send the request to review such a record or the written statement of additions, dissents, or objections to the custodian or to the division in which the record is maintained. The request to review such a record or the written statement of such a record of additions, dissents, or objections must be dated and signed by requester, and shall include the current address and telephone number of the requester or the requester's representative.

641—175.7(17A,22) Consent to disclosure by the subject of a confidential record. Except as otherwise provided by law, a person who is the subject of a confidential record may have a copy of the portion of that record concerning the subject disclosed to a third party. A request for such a disclosure must be in writing and must identify the particular record or records that may be disclosed, and the particular person or class of persons to whom they may be disclosed. The person who is the subject of the record and, where applicable, the person to whom the record is to be disclosed, may be required to provide proof of identity. Appearance of counsel before the department on behalf of a person who is the subject of a confidential record is deemed to constitute consent for the department to disclose records about that person to the person's attorney.

641—175.8(17A,22) Notice to suppliers of information. When the department requests a person to supply information about that person, the department may notify the person of the use that will be made of the information, which persons outside the department might routinely be provided this information, which parts of the requested information are required and which are optional, and the consequences of a failure to provide the information requested. This notice may be given in these rules, on the written form used to collect the information, on a separate fact sheet or letter, in brochures, in formal agreements, in contracts, in handbooks, in manuals, verbally, or by other appropriate means.

641—175.9(17A,22) Disclosures without the consent of the subject.

175.9(1) The department shall routinely disclose open records without the consent of the subject.

175.9(2) To the extent allowed by law, disclosure of confidential records may occur without the consent of the subject. Following are instances where disclosure, if lawful, will generally occur without notice to the subject:

a. For a routine use as defined in rule 175.10(17A,22) or in the notice for a particular record system.

b. To a recipient who has provided the department with advance written assurance that the record will be used solely as a statistical research or reporting record. The department shall not release confidential data or information pursuant to this chapter unless the department and the recipient have executed an agreement which includes the conditions under which the confidential data or information may be used and a restriction on the further disclosure of the data or information.

c. To another government agency or to an instrumentality of any governmental jurisdiction within or under the control of the United States for a civil, administrative, or criminal law enforcement activity if the activity is authorized by law, and if an authorized representative of such government agency or instrumentality has submitted a written request to the department specifying the record desired and the law enforcement activity for which the record is sought.

d. To an individual pursuant to a showing of compelling circumstances affecting the health or safety of any individual if a notice of the disclosure is transmitted to the last-known address of the subject.

e. To the legislative services agency under Iowa Code section 2A.3.

f. Disclosures in the course of employee disciplinary proceedings.

g. In response to a court order or subpoena.

h. To the office of citizens' aide pursuant to Iowa Code section 2C.9.

641—175.10(17A,22) Routine use.

175.10(1) Defined. "Routine use" means the disclosure of a record without the consent of the subject for a purpose which is compatible with the purpose for which the record was collected. "Routine use" includes disclosures required or authorized by statute or rule.

175.10(2) To the extent allowed by law, the following uses are considered routine uses of all department records:

a. Disclosure to those officers, employees, and agents of the department who have a need for the record in the performance of their duties.

b. Disclosure to employees of federal, state and local agencies and other researchers for purposes of bona fide research. The department shall not release data or information pursuant to this paragraph unless the department and the researcher have executed an agreement which includes the conditions under which the confidential data or information may be used and restrictions on further disclosure of the data or information.

c. Disclosure of information indicating an apparent violation of the law to appropriate law enforcement authorities for investigation and possible criminal prosecution, civil court action, or regulatory order.

d. Disclosure to the department of inspections and appeals for matters in which it is performing services or functions on behalf of the department.

e. Transfers of information within the department, to other state or federal agencies, or to local units of government as necessary to administer the program for which the information is collected or as necessary to administer a program within the other governmental agency. Confidential information transferred within the department or provided to other agencies pursuant to this paragraph shall continue to maintain its confidential status and shall not be rereleased by the receiving agency.

f. Information released to staff of federal and state entities for audit purposes or for purposes of determining whether the department is operating a program lawfully.

g. Any disclosure specifically authorized by the statute or rule under which the record was collected or maintained.

641—175.11(17A,22) Consensual disclosure of confidential records.

175.11(1) *Consent to disclosure by a subject individual.* To the extent permitted by law, the subject may consent in writing to department disclosure of confidential records as provided in rule 175.7(17A,22).

175.11(2) *Complaints to public officials.* A letter from a subject of a confidential record to a public official which seeks the official's intervention on behalf of the subject in a matter that involves the department may to the extent permitted by law be treated as an authorization to release sufficient information about the subject to the official to resolve the matter.

641—175.12(17A,22) Release to subject.

175.12(1) The subject of a confidential record may file a written request to review confidential records about that person as provided in rule 175.6(17A,22). However, the department need not release the following records to the subject:

a. The identity of a person providing information to the department need not be disclosed directly or indirectly to the subject of the information when the information is authorized to be held confidential pursuant to Iowa Code section 22.7(18) or other provision of law.

b. Records need not be disclosed to the subject when they are the work product of an attorney or are otherwise privileged.

c. Peace officers' investigative reports may be withheld from the subject, except as required by the Iowa Code.

d. As otherwise authorized by law.

175.12(2) Where a record has multiple subjects with interest in the confidentiality of the record, the department shall take reasonable steps to protect confidential information relating to another subject.

641—175.13(17A,22) Availability of records.

175.13(1) *General.* Department records are open for public inspection and copying subject to supervision unless otherwise provided by statute or rule.

175.13(2) *Confidential records.* The following records shall be withheld from public inspection. Records are listed by department division and include the legal authority for withholding the record from public inspection.

a. Division of acute disease prevention and emergency response.

(1) Records which identify a person infected with or exposed to a reportable disease or other disease or health condition collected pursuant to Iowa Code chapter 139A, and maintained as confidential pursuant to Iowa Code section 139A.3(2)*"b"* and Iowa Code section 22.7(16).

(2) Records which identify a business involved in a reportable disease or other disease or health condition investigation collected pursuant to Iowa Code chapter 139A, and maintained as confidential pursuant to Iowa Code section 139A.3(2)*"c."* The identity of a business may be disclosed pursuant to this authority only if the state epidemiologist or the director of the department determines such a release of information necessary for the protection of the health of the public.

(3) Records which identify a person infected with or exposed to a reportable sexually transmitted disease or infection collected pursuant to Iowa Code chapter 139A, and maintained as confidential pursuant to Iowa Code section 139A.30 and Iowa Code section 22.7(16).

(4) Records which identify a person infected with or exposed to HIV/AIDS collected pursuant to Iowa Code chapter 141A, and maintained as confidential pursuant to Iowa Code section 141A.9.

(5) Data and records received or developed by the trauma system evaluation and quality improvement committee, including patient and emergency medical care service program identifying information, collected pursuant to Iowa Code chapter 147A, and maintained as confidential pursuant to Iowa Code section 147A.25.

(6) Data collected by and furnished to the statewide trauma registry which identifies a patient or former patient collected pursuant to Iowa Code section 147A.26, and maintained as confidential pursuant to Iowa Code section 147A.26.

(7) All information in complaint and investigative files maintained by the bureau of emergency medical services collected pursuant to Iowa Code chapter 147A, and maintained as confidential pursuant to Iowa Code section 272C.6(4), except that the information may be released to the provider or the service once a disciplinary proceeding has been initiated by the filing of a notice of proposed action. A notice of proposed action and final agency action are public documents.

(8) Immunization information which identifies a patient maintained on the statewide immunization registry collected pursuant to Iowa Code section 22.7(2), and maintained as confidential pursuant to Iowa Code section 22.7(2) and 641—subrule 7.11(4). The department's rules regarding sharing of immunization information are contained at 641—7.12(22).

b. Division of administration and professional licensure.

(1) Vital records maintained pursuant to Iowa Code chapter 144, including records of births, deaths, fetal deaths, adoptions, marriages, divorces, annulments and related data and correspondence, and maintained as confidential pursuant to Iowa Code section 144.43.

(2) Licensing and disciplinary records of the professional licensing boards may be confidential in accordance with Iowa Code section 272C.6(4) and 645—10.13(17A,22).

c. Division of behavioral health.

(1) Records which identify a person named in a report to the central registry for brain or spinal cord injuries collected pursuant to Iowa Code section 135.22, and maintained as confidential pursuant to Iowa Code section 135.22 and 641—21.6(135).

(2) Information contained in a complaint regarding a licensed substance abuse program collected pursuant to Iowa Code chapter 125, and maintained as confidential pursuant to Iowa Code sections 22.7(2), 22.7(18), and 125.37. Investigative reports, written plans of corrective action, and all notices and orders issued by the board of health shall refer to clients and patients by number and shall not include any other client or patient identifying information. Investigative reports, written plans of corrective action, and all notices and orders issued by the board of health shall be available to the public as open records in accordance with 641—subrule 155.16(5).

(3) Records which identify the victim of a domestic abuse death collected or maintained by the Iowa domestic abuse death review team pursuant to Iowa Code section 135.110, and maintained as confidential pursuant to Iowa Code section 135.111.

d. Division of environmental health.

(1) Drafts of proposed regulations released to the department from the federal government which constitute essential information needed by the department to ensure compliance with federal regulations collected pursuant to Iowa Code chapter 136C, and maintained as confidential pursuant to Iowa Code section 22.9 and 641—subrule 38.7(2).

(2) Applications and documents submitted to the department pursuant to Iowa Code chapter 136C, which may be maintained as confidential pursuant to 641—subrule 39.4(24) if disclosure of their contents is not required in the public interest and would adversely affect the interest of a person concerned.

(3) Records which identify a person infected with or exposed to a reportable disease or other disease or health condition, including lead and other heavy metal poisonings, collected pursuant to Iowa Code chapter 139A, and maintained as confidential in accordance with Iowa Code section 139A.3(2)*"b."*

(4) Records which identify a business involved in a reportable disease or other disease or health condition investigation, including a lead or other heavy metal poisoning investigation, collected pursuant to Iowa Code chapter 139A, and maintained as confidential pursuant to Iowa Code section 139A.3(2)*"c."* The identity of a business may be disclosed pursuant to this authority only if the state epidemiologist or the director of the department determines such a release of information necessary for the protection of the health of the public or if the release is required by federal, state, or local law.

e. Division of health promotion and chronic disease prevention.

(1) All medical, health and nutrition information which identifies a WIC program participant collected pursuant to federal law and Iowa Code chapter 135, and maintained as confidential in accordance with 7 CFR 246, Iowa Code section 22.7(2), and 641—subrule 73.7(7).

(2) Records which identify the victim of a child death collected or maintained by the Iowa child death review team pursuant to Iowa Code section 135.43, and maintained as confidential pursuant to Iowa Code section 135.43.

(3) Records which identify a child subject to a newborn and infant hearing screening collected pursuant to Iowa Code section 135.131, and maintained as confidential pursuant to Iowa Code section 135.131 and 641—3.10(80GA,ch102).

(4) Records which identify a person named in a report to the central registry for congenital and inherited disorders collected pursuant to Iowa Code section 136A.7, and maintained as confidential in accordance with Iowa Code section 136A.7 and 641—subrule 4.3(7).

(5) Records which identify a person infected with or exposed to a reportable disease or other disease or health condition, including a congenital or inherited disorder, collected pursuant to Iowa Code chapter 139A, and maintained as confidential pursuant to Iowa Code section 139A.3(2)*"b."*

f. Sections which govern all divisions.

(1) Records which contain medical information collected pursuant to Iowa Code chapters 135, 139A, and 147A, and maintained as confidential pursuant to Iowa Code section 22.7(2).

(2) Records collected from any person, hospital, or other organization related to the condition and treatment of any person to be used in the course of any study for the purpose of reducing morbidity or mortality collected pursuant to Iowa Code section 135.40, and maintained as confidential pursuant to Iowa Code sections 135.40, 135.41, and 135.42.

(3) Records concerning security procedures or emergency preparedness developed and maintained by the department or other federal or state agency for the protection of governmental employees, visitors to the department, persons in the care, custody, or under the control of the department, or property under the jurisdiction of the department, if disclosure could reasonably be expected to jeopardize such employees, visitors, or property. Pursuant to Iowa Code section 22.7(50), the department has adopted a policy which identifies all specific records or classes of records to which this protection applies.

175.13(3) Minutes of closed meetings of a government body shall be kept confidential in accordance with Iowa Code section 21.5.

175.13(4) Identifying details in final orders, decisions and opinions shall be kept confidential to the extent required to prevent a clearly unwarranted invasion of personal privacy or trade secrets under Iowa Code section 17A.3(1)*"e."*

175.13(5) Portions of department staff manuals, instructions or other statements issued shall be kept confidential when such documents set forth criteria or guidelines to be used by department staff in auditing, in making inspections, in settling commercial disputes or negotiating commercial arrangements, or in the selection or handling of cases, such as operational tactics or allowable tolerances or criteria for the defense, prosecution or settlement of cases, when disclosure of these statements would:

a. Enable law violators to avoid detection;

b. Facilitate disregard of requirements imposed by law; or

c. Give a clearly improper advantage to persons who are in an adverse position to the department.

175.13(6) Records which constitute attorney work product or attorney-client communications or which are otherwise privileged shall be kept confidential. Attorney work product is confidential under Iowa Code sections 22.7(4), 622.10 and 622.11, Iowa R.C.P. 1.503, Fed. R. Civ. P. 26(b)(3), and case law. Attorney-client communications are confidential under Iowa Code sections 622.10 and 622.11, the rules of evidence, the Code of Professional Responsibility, and case law.

175.13(7) Records exempted from public inspection under Iowa Code section 22.7 or any other provision of law shall be kept confidential.

641—175.14(17A,22) Personally identifiable information. This rule describes the nature and extent of personally identifiable information which is collected, maintained, and retrieved by the department by personal identifiers in record systems as defined in rule 175.1(17A,22). For each record system, this rule describes the legal authority for the collection of that information and the means of storage of that information. A data processing system does not match, collate, or permit the comparison of personally

identifiable information in one record system with personally identifiable information in another record system unless so indicated. The record systems maintained by the department are as follows:

175.14(1) *Division of acute disease prevention and emergency response.*

a. Records of reportable diseases and other diseases and health conditions collected pursuant to Iowa Code chapter 139A. These records are stored on paper, electronically, or both, depending on the specific type of record. Except for statistical reports, these records are confidential as outlined in 175.13(2)*"a."*

b. Records of reportable sexually transmitted diseases or infections collected pursuant to Iowa Code chapter 139A. These records are stored on paper, electronically, or both, depending on the specific type of record. Except for statistical reports, these records are confidential as outlined in 175.13(2)*"b."*

c. Records of the veterinary public health program collected pursuant to Iowa Code chapter 139A. These records are stored on paper. Certain medical information in these records may be confidential as outlined in 175.13(2)*"a."*

d. Records of the emergency medical services program collected pursuant to Iowa Code chapter 147A. These records are stored on paper, electronically, or both, depending on the specific type of record. Some of these records are confidential as outlined in 175.13(2)*"a."*

e. Records of the AIDS drug reimbursement program collected for purposes of implementing a federal grant program authorized by HR 1827. These records are stored on paper. Certain patient records are confidential as outlined in 175.13(2)*"a."*

f. Personnel records containing information about employees, families and dependents, and applicants for positions with the department. Some of this information is confidential under Iowa Code sections 22.7(11) and 22.7(18).

g. Records of the certificate of need program collected pursuant to Iowa Code sections 135.61 to 135.83. These records are stored on paper.

h. Annual hospital surveys collected pursuant to Iowa Code sections 135.74 and 135.75. These records are stored on paper and electronically.

175.14(2) *Division of administration and professional licensure.*

a. Vital records collected pursuant to Iowa Code chapter 144, including records of births, deaths, fetal deaths, adoptions, marriages, divorces, annulments and related data and correspondence. These records are stored on paper, on microfiche, and electronically. These records are confidential as noted in 175.13(2)*"b."*

b. Licensing records of the professional licensing boards. These records are identified in rules filed by the individual licensing boards (see Professional Licensure Division, IAC 645). They contain information about individuals, some of which is confidential.

c. An electronic inventory of records maintained by the department, which indicates the type of information contained in the record, contact person for the record, how the record is stored, whether the record is confidential, and whether it contains personally identifiable information. This inventory is maintained by the information management bureau.

d. Fiscal records, including itemized vouchers collected from individuals pursuant to Iowa Code section 8A.514. These records are stored on paper and electronically.

175.14(3) *Division of behavioral health.*

a. Records of substance abuse programs of this division are identified in rules adopted by the board of health in 641—Chapter 155.

b. Records of the domestic abuse death review team collected pursuant to Iowa Code section 135.110. These records are stored on paper, electronically, or both. Except for statistical reports, these records are confidential as outlined in 175.13(2)*"c."*

c. Records which identify a person named in a report to the central registry for brain or spinal cord injuries collected pursuant to Iowa Code section 135.22. These records are stored on paper, electronically, or both. Except for statistical reports, these records are maintained as confidential pursuant to Iowa Code section 135.22 and 641—21.6(135).

d. Records which identify brain injury service program recipients collected pursuant to Iowa Code section 135.22B. These records are stored on paper, electronically, or both.

175.14(4) *Division of environmental health.*

a. Records of the environmental health programs collected pursuant to Iowa Code section 135.11(1) and PL 96-510, Section 104(d)(1), 40 CFR 763 effective June 28, 1983, and 40 CFR 761 effective May 31, 1979, dealing with asbestos, PCB and other environmental health factors. These records are stored on paper, electronically, or both, depending on the specific type of record. Certain medical information in the work-related disease program file may be confidential as outlined in 175.13(2)*"d."* Certain asbestos and PCB inspection records are collected under contract with the federal Environmental Protection Agency, and requests for such records will be referred to that agency.

b. Records of the radiological health program collected pursuant to Iowa Code chapters 136B and 136C. These records are stored on paper, electronically, or both, depending on the specific record. Certain of these records are confidential as outlined in 175.13(2)*"d."*

c. Records of reportable diseases and other diseases and health conditions, including lead and other heavy metal poisonings, collected pursuant to Iowa Code chapter 139A. These records are stored on paper, electronically, or both, depending on the specific type of record. Except for statistical reports, these records are confidential as outlined in 175.13(2)*"a."*

d. Records of the childhood lead poisoning prevention program collected pursuant to Iowa Code sections 135.100 to135.105. These records are stored on paper, electronically, or both. Certain of these records are confidential as outlined in 175.13(2)*"d."* Data processing systems will link certain client data in these programs with client data in the maternal and child health program, WIC program, and refugee health program.

175.14(5) *Division of health promotion and chronic disease prevention.*

a. Records of the maternal and child health programs collected pursuant to Iowa Code section 135.11(20). These records are stored on paper, electronically, or both, depending on the specific type of record. Data processing systems will link certain client data in these programs with client data in the WIC program.

b. Records of the nutrition and WIC (supplemental food program for women, infants and children) programs collected pursuant to Iowa Code section 135.11(1) and Chapter 17 of the federal Child Nutrition Act of 1966 as amended. These records are stored on paper, electronically, or both, depending on the specific type of record. Data processing systems will link certain client data in this program with client data in maternal and child health programs.

c. Records of the center for congenital and inherited disorders collected pursuant to Iowa Code chapter 136A. These records are stored on paper.

d. Records of the dental health programs collected pursuant to Iowa Code section 135.11(19), funded primarily by maternal and child health funds. These records are stored on paper or electronically, depending on the specific type of record.

e. Records of the newborn and infant hearing screening program collected pursuant to Iowa Code section 135.131. These records are stored on paper, electronically, or both, depending on the specific type of record. Information which identifies an individual patient is confidential as outlined in 175.13(2)*"e."*

f. Refugee health program records collected pursuant to Iowa Code section 135.11(1) and Section 412(c)(3) of the federal Immigration and Naturalization Act. These records are stored on paper, electronically, or both, depending on the specific type of record. Certain medical information in these records is confidential as outlined in 175.13(2)*"f."*

g. Records of the bureau of chronic disease prevention and management collected pursuant to Iowa Code section 135.11(1), including the Well-Integrated Screening and Evaluation for Women Across the Nation (WISEWOMAN) program and the Breast and Cervical Cancer Early Detection Program (BCCEDP). Certain medical information in these records is confidential as outlined in 175.13(2)*"f."* The medical information from wellness programs and screening programs is stored on paper, electronically, or both, depending on the specific type of record. Data processing systems will link certain client data in these programs with client data in the University of Iowa's health registries.

641—175.15(17A,22) Other groups of records. This rule describes groups of records maintained by the agency other than record systems as defined in rule 175.2(17A,22). These records are routinely

available to the public. However, the department's files of these records may contain confidential information as discussed in rule 175.13(17A,22). The records listed may contain information about individuals. All records are stored on paper unless otherwise noted.

175.15(1) *Rule making.* Rule-making records may contain information about individuals making written or oral comments on proposed rules. This information is collected pursuant to Iowa Code section 17A.4.

175.15(2) *Council and commission records.* Agendas, minutes, and materials presented to the councils, committees and commissions listed below, by division, are available from the department, except those records concerning closed sessions which are exempt from disclosure under Iowa Code section 21.5(4) or which are otherwise confidential by law. Council and commission records contain information about people who participate in meetings. This information is collected pursuant to Iowa Code section 21.3.

a. Division of acute disease prevention and emergency response.

(1) EMS advisory council established in Iowa Code section 147A.2.

(2) System evaluation and quality improvement committee established in Iowa Code section 147A.25.

(3) Trauma system advisory council established in Iowa Code section 147A.24.

(4) State health facilities council established in Iowa Code section 135.61.

b. Division of administration and professional licensure: professional licensing boards established in Iowa Code chapters 147 and 272C.

c. Division of behavioral health.

(1) Advisory council on brain injuries established in Iowa Code section 135.22A.

(2) Domestic abuse death review team established in Iowa Code section 135.109.

(3) State substitute medical decision-making board established in Iowa Code section 135.28.

d. Division of environmental health: technical advisory committee for radiation machines and radioactive materials established in Iowa Code section 136C.3(2).

e. Division of health promotion and chronic disease prevention.

(1) Abuse education review panel established in Iowa Code section 135.11(27).

(2) Advisory committee to the center for rural health and primary care established in Iowa Code section 135.107.

(3) Committee on maternal and child health established in Iowa Code section 235C.1.

(4) Council on chemically exposed infants and children established in Iowa Code section 235C.1.

(5) Iowa child death review team established in Iowa Code section 135.43.

f. Division of tobacco use prevention and control.

(1) Commission on tobacco use prevention and control established in Iowa Code section 142A.3(2).

(2) Commission on tobacco use prevention and control advisory council established in Iowa Code section 142A.3(9).

(3) Just Eliminate Lies executive body established in Iowa Code section 142A.9(2)*"c."*

g. Director's office.

(1) Interagency coordinating council established in Iowa Code section 691.6B.

(2) State board of health established in Iowa Code chapter 136.

(3) State medical examiner advisory council established in Iowa Code section 691.6C.

(4) Preventative health and health services block grant advisory committee.

(5) Other ad hoc and advisory committees as established by the director pursuant to Iowa Code section 135.11(26).

175.15(3) *Publications.* News releases, annual reports, project reports, and department newsletters are available from the public information office. Department news releases, project reports, and newsletters may contain information about individuals, including department staff or members of department councils or committees.

175.15(4) *Statistical reports.* Periodic reports of vital statistics records are available from the bureau of vital statistics.

175.15(5) *Appeal decisions and advisory opinions.* All final orders, decisions and opinions are open to the public except for information that is confidential according to rule 175.13(17A,22) or 175.14(17A,22). These records may contain information about individuals.

175.15(6) *Published materials.* The department uses many legal and technical publications in its work. The public may inspect these publications upon request. Some of these materials may be protected by copyright law.

175.15(7) *Policy manuals.* Policy or program manuals for various programs may be obtained by contacting the program.

175.15(8) *All other records that are not exempted from disclosure by law.* Other records used by the department include correspondence files, surveys conducted by programs, information and data files, and records used for processing purposes internally. Some of these records may contain information about individuals. Correspondence files may contain confidential information protected by statutes cited in rule 175.13(17A,22).

641—175.16(17A,22) Data processing systems. Except where otherwise noted, data processing systems used by the department do not permit the comparison of personally identifiable information in one record system with personally identifiable information in another record system.

641—175.17(17A,22) Applicability. This chapter does not:

1. Require the department to index or retrieve records which contain information about individuals by that person's name or other personal identifier.
2. Make available to the general public records which would otherwise not be available under the public records law, Iowa Code chapter 22.
3. Govern the maintenance or disclosure of, notification of, or access to records in the possession of the department which are governed by the regulations of another agency.
4. Apply to grantees, including local governments or subdivisions, that administer state-funded programs, unless otherwise provided by law or agreement.
5. Make available records compiled by the department in reasonable anticipation of court litigation or formal administrative proceedings. The availability of such records to the general public or to any individual or party subject to such litigation or proceedings shall be governed by applicable legal and constitutional principles, statutes, rules of discovery, evidentiary privileges, and applicable regulations of the department.

These rules are intended to implement Iowa Code chapters 17A and 22.

[Filed 4/15/88, Notice 1/27/88—published 5/4/88, effective 7/1/88]
[Filed 7/10/08, Notice 5/21/08—published 7/30/08, effective 9/3/08]

CHAPTER 176
CRITERIA FOR AWARDS OR GRANTS

641—176.1(135,17A) Purpose. The department provides funds to a variety of entities throughout the state for the support of public health programs. The department considers that all funds are subject to competition pursuant to Iowa Code statutes and Iowa Administrative Code rules governing service contracts.

641—176.2(135,17A) Definitions. For the purpose of these rules, the following definitions shall apply:

"Competitive selection process" means the competitive selection application process engaged in by the department to compare applicant qualifications, terms, conditions and pricing for services to purchase services based on quality, performance, and prices of equal or similar services in order to meet the objective of purchasing services based on quality, performance, or price or any combination thereof.

"Continuation application" means the application process for subsequent years within a project period following a competitive selection process.

"Department" means the Iowa department of public health.

"Project" means the activities or program(s) funded by the department.

"Project period" means the period of time which the department intends to support the project without requiring the recompetition for funds. The project period is specified within the competitive selection application and may extend to six years.

"Service delivery area" means the defined geographic area for delivery of project services. Competitive applications shall not fragment existing integrated service delivery within the defined geographic area.

641—176.3(135,17A) Exceptions. Exceptions to these rules are as follows:

1. New funds (including pilot studies and demonstration grants) that become available for new services.
2. Federal or private funding agency specified a sole source.
3. An organization failed to meet conditions and performance standards specified in the contract awards.
4. Mutual agreement among department and contract organizations.

641—176.4(135,17A) Requirements. The following shall be included in all competitive selection applications made available by the department:

1. Funding source.
2. Project period.
3. Services to be delivered.
4. Service delivery area.
5. Funding purpose.
6. Funding restrictions.
7. Funding formula (if any).
8. Matching requirements (if any).
9. Reporting requirements.
10. Performance criteria (experience of applicant in administering similar contracts).
11. Description of eligible applicants.
12. Need for letters of support or other materials (if applicable).
13. Application due date.
14. Anticipated date of award.
15. Eligibility guidelines for those receiving the service or product and the source of those guidelines, including fees or sliding fee scales (if applicable).
16. Target population to be served (if applicable).
17. Evaluation process and criteria.

18. Appeal process.
19. Contractual terms.
20. Business organization.

641—176.5(135,17A) Review process (competitive applications only). The review process to be followed in determining the amount of funds to be approved for award of a contract shall be described in the competitive selection application. The review criteria and the point allocation for each criterion shall also be described in the competitive selection application.

The review committee membership shall be determined by the bureau chief, with oversight from the respective division director. The review committee members shall allocate points per review criterion in conducting the review.

In the event applications for the service delivery area receive an equal number of points, a second review may be conducted by two management employees and one nonmanagement employee as designated by the respective division director.
[**ARC 1750C**, IAB 12/10/14, effective 1/14/15]

641—176.6(135,17A) Opportunity for review and comment. Rescinded IAB 1/30/08, effective 3/5/08.

641—176.7(135,17A) Public notice of available funds. The department shall post all competitive selection documents on the department of management's IowaGrants Web site at www.IowaGrants.gov for the duration of the application period.
[**ARC 1750C**, IAB 12/10/14, effective 1/14/15]

641—176.8(135,17A) Appeals.

176.8(1) *Appeal.* Letters of intent and applications received by the department after the due date and time stated in the competitive selection application will be rejected and will not be reviewed by the department, and a notice will be sent to the applicant. An applicant may appeal the denial of a timely submitted application. The appeal shall be submitted in writing within ten business days of receipt of notification of the adverse decision. The appeal shall be addressed to the contract administrator cited in the competitive selection application guidance, Department of Public Health, Lucas State Office Building, Des Moines, Iowa 50319-0075. In the event of an appeal, the department will continue working with the applicant awarded funding pending the outcome of the appeal.

176.8(2) *Contested case.* Upon receipt of an appeal that meets contested case status, the appeal shall be forwarded within five working days to the department of inspections and appeals (DIA) pursuant to the administrative rules adopted by DIA regarding transmission of cases.

176.8(3) *Hearing.* Parties shall receive notice of the hearing in advance. The administrative law judge shall schedule the time, place, and date of the hearing so that the hearing is held as expeditiously as possible. The hearing shall be conducted according to the procedural rules for contested case hearings found at 481—Chapter 10.

176.8(4) *Decision of administrative law judge.* The administrative law judge's decision shall be issued within 60 days from the date of the hearing. The administrative law judge's proposed decision shall be served by certified mail, return receipt requested, or delivered by personal service. The proposed decision and order becomes the department's final decision without further proceedings 10 days after it is received by the aggrieved party unless an appeal to the director is filed by either of the parties as provided in subrule 176.8(5) or the director serves notice on the parties of the director's intent to review the decision.

176.8(5) *Appeal to director.* Any appeal to the director for review of a proposed decision shall be in writing and submitted to the director by electronic mail; delivered by certified mail, return receipt requested; or delivered by personal service within ten days after the receipt of the administrative law judge's proposed decision and order by the aggrieved party. A copy of the appeal shall also be mailed to the administrative law judge and the other parties. A request for appeal shall include the specific grounds for appeal.

176.8(6) *Record of hearing.* Upon receipt of an appeal request, the administrative law judge shall prepare a record of the hearing for submission to the director. The record shall include the following:

a. All pleadings, motions, and rules;

b. All evidence received or considered and all other submissions by recording or transcript;

c. All statements of matters officially noticed;

d. All questions and offers of proof, objections, and rulings thereon;

e. All proposed findings and exceptions; and

f. The proposed decision and order of the administrative law judge.

176.8(7) *Decision of director.* Upon receipt of a properly filed appeal, the director shall establish a briefing schedule and, at the discretion of the director, an opportunity for oral argument. An appeal to the director shall be based on the record made at the hearing. The director may reverse or modify any finding of fact if a preponderance of the evidence will support a determination to reverse or modify such a finding, or may reverse or modify any conclusion of law the director finds to be in error. The decision and order of the director shall be issued within 90 days of the date of the receipt of the appeal and delivered by certified mail, return receipt requested, or by personal service, and becomes the department's final decision upon receipt by the aggrieved party.

176.8(8) *Exhausting administrative remedies.* It is not necessary to file an application for rehearing to exhaust administrative remedies when appealing to the director or the district court as provided in Iowa Code section 17A.19.

176.8(9) *Judicial review.* The aggrieved party to the final decision of the department who has exhausted all administrative remedies may petition for judicial review of that action pursuant to Iowa Code chapter 17A. Petitions for judicial review shall be filed within 30 days after the decision becomes final. The party who appeals a final agency action to district court shall pay the costs of the preparation of a transcript of the contested case hearing for the district court.

176.8(10) *Applicability of rule.* This rule governs the appeal process for a competitive selection process if the specific administrative rules of the relevant program do not contain a process for appeal.
[**ARC 1750C**, IAB 12/10/14, effective 1/14/15]

These rules are intended to implement Iowa Code chapters 17A and 135.

[Filed 3/13/92, Notice 1/8/92—published 4/1/92, effective 5/6/92]
[Filed 11/5/92, Notice 9/30/92—published 11/25/92, effective 12/30/92]
[Filed 9/17/99, Notice 6/16/99—published 10/6/99, effective 11/10/99]
[Filed 1/10/02, Notice 11/28/01—published 2/6/02, effective 3/13/02]
[Filed 1/10/08, Notice 11/21/07—published 1/30/08, effective 3/5/08]
[Filed ARC 1750C (Notice ARC 1656C, IAB 10/1/14), IAB 12/10/14, effective 1/14/15]

CHAPTER 177
HEALTH DATA

641—177.1(76GA,ch1212) Purpose. The purpose of this chapter is to collect and provide access to health information to health care providers, health care subscribers, third-party payors and the general public. Such information may be collected from state agencies, health care providers, the state medical assistance program, third-party payors, associations, and other appropriate sources.

641—177.2(76GA,ch1212) Definitions. For purposes of this chapter, the following definitions shall apply:

"Confidential record" in these rules means a record which is not available as a matter of right for examination and copying by members of the public under applicable provisions of law. Confidential records include records or information contained in records that the agencies are prohibited by law from making available for examination by members of the public, and records or information contained in records that are specified as confidential by Iowa Code section 22.7, or other provision of law, but that may be disclosed upon order of a court, the lawful custodian of the record, or by another person duly authorized to release the record. Mere inclusion in a record of information declared confidential by an applicable provision of law does not necessarily make that entire record a confidential record. Included in the definition are those data collected by the department, pursuant to 1996 Iowa Acts, chapter 1212, for preparation and dissemination as compilations.

"Contractor" means a nonprofit corporation acting, pursuant to written agreement with the department to, among other things, compile, correlate and develop data for release by the department in accordance with the provisions of 1996 Iowa Acts, chapter 1212.

"Department" is defined as Iowa department of public health.

"Payor" is as defined by Iowa Code chapter 144C.

"Record" in these rules means the whole or a part of a "public record" as defined in Iowa Code section 22.1, that is owned by or in the physical possession of this agency.

641—177.3(76GA,ch1212) Description of data to be submitted.

177.3(1) The department shall collect information from other state agencies for the purpose of public dissemination of health data.

177.3(2) Hospitals shall submit data to the Iowa Hospital Association which shall serve as an intermediary for the Iowa department of public health. The information shall include inpatient, outpatient and ambulatory information.

641—177.4(76GA,ch1212) Department studies. The department shall conduct special studies consistent with the intent of 1996 Iowa Acts, chapter 1212, using data collected in accordance with subrule 177.3(1). In conducting such studies, the department may utilize the services of a contractor.

641—177.5(76GA,ch1212) Fees. Fees charged for data provided by the department shall not exceed administrative costs. Such charges may include copying, postage, supervisory, computer programming, time and medium fees.

641—177.6(76GA,ch1212) Patient confidentiality. The department shall protect patient confidentiality. Confidential records or parts of such records collected as a part of this process shall be kept confidential. Individual patient names shall not be collected to protect patient confidentiality.

641—177.7(76GA,ch1212) Department contracting. Contracting procedures shall follow 641—Chapter 176.

641—177.8(76GA,ch1212) Address and specification for data submissions. Data required to be submitted pursuant to this chapter shall be sent by agencies and health care providers, or their

representatives, to the Iowa Department of Public Health, Center for Health Statistics, Lucas State Office Building, East 12th and Grand Avenue, Des Moines, Iowa 50319.

Data required to be submitted pursuant to this rule shall be sent in the form designated by the department within 30 days following the six-month calendar periods ending in June and December.

These rules are intended to implement 1996 Iowa Acts, chapter 1212.

[Filed 5/16/97, Notice 2/26/97—published 6/4/97, effective 7/9/97]

[Filed 3/14/02, Notice 2/6/02—published 4/3/02, effective 5/8/02]

CHAPTER 178
VARIANCES AND WAIVERS OF PUBLIC HEALTH ADMINISTRATIVE RULES

641—178.1(17A,135) Waivers.

178.1(1) *Definition.* For purposes of this chapter, "a waiver or variance" means action by the department that suspends, in whole or in part, the requirements or provisions of a rule as applied to an identified person on the basis of the particular circumstances of that person. For simplicity, the term "waiver" shall include both a "waiver" and a "variance."

178.1(2) *Scope.* This rule outlines generally applicable standards and a uniform process for the granting of an individual waiver from a rule adopted by the department in situations where no other more specifically applicable law provides for a waiver. To the extent another more specific provision of law governs the issuance of a waiver from a particular rule, the more specific provision shall supersede this rule with respect to any waiver from that rule.

178.1(3) *Applicability.* The department may only grant a waiver from a rule if the department has jurisdiction over the rule and the requested waiver is consistent with applicable statutes, constitutional provisions, or other provisions of law. The department may not waive requirements created or duties imposed by statute.

178.1(4) *Criteria for waiver.* In response to a petition completed pursuant to subrule 178.1(6), the department may in its sole discretion issue an order waiving in whole or in part the requirements of a rule if the department finds, based on clear and convincing evidence, all of the following:

a. The application of the rule would impose an undue hardship on the person for whom the waiver is requested;

b. The waiver from the requirements of the rule in the specific case would not prejudice the substantial legal rights of any person;

c. The provisions of the rule subject to the petition for a waiver are not specifically mandated by statute or another provision of law; and

d. Substantially equal protection of public health, safety, and welfare will be afforded by a means other than that prescribed in the particular rule for which the waiver is requested.

178.1(5) *Filing of petition.* A petition for a waiver must be submitted in writing to the department as follows:

a. Application for license, registration, certification, or permit. If the petition relates to an application for license, registration, certification, or permit, the petition shall be made in accordance with the filing requirements for the application in question.

b. Contested cases. If the petition relates to a pending contested case, the petition shall be filed in the contested case proceeding, using the caption of the contested case.

c. Other. If the petition does not relate to an application or a pending contested case, the petition may be submitted to the department director.

d. A petition is deemed filed when it is received at the department's office. A petition should be sent to the Department of Public Health, Lucas State Office Building, 321 E. 12th Street, Des Moines, Iowa 50319. The petition must be typewritten or legibly handwritten in ink and substantially conform to the form specified in 641—178.2(17A,135).

178.1(6) *Content of petition.* A petition for waiver shall include the following information where applicable and known to the requester:

a. The name, address, and telephone number of the person for whom a waiver is being requested and a reference to any related contested case. The petition shall also include the name, address, and telephone number of the petitioner's legal representative, if applicable, and a statement indicating the person to whom communications concerning the petition should be directed.

b. A description and citation of the specific rule from which a waiver is requested.

c. The specific waiver requested, including the precise scope and duration.

d. The relevant facts that the petitioner believes would justify a waiver under each of the four criteria described in subrule 178.1(4). This statement shall include a signed statement from the petitioner

attesting to the accuracy of the facts provided in the petition and a statement of reasons that the petitioner believes will justify a waiver.

e. A history of any prior contacts between the department and the petitioner relating to the regulated activity, license, registration, certification, or permit affected by the proposed waiver, including a description of each affected license, registration, certification, or permit held by the requester, any formal charges filed, any notices of violation, contested case hearings, or investigations relating to the regulated activity, license, registration, certification or permit.

f. Any information known to the requester regarding the department's action in similar circumstances.

g. The name, address, and telephone number of any public agency or political subdivision that also regulates the activity in question or that might be affected by the granting of a waiver.

h. The name, address, and telephone number of any person who would be adversely affected by the granting of the petition.

i. The name, address, and telephone number of any person with knowledge of the relevant facts relating to the proposed waiver.

j. Signed releases of information authorizing persons with knowledge regarding the request to furnish the department with information relevant to the waiver.

178.1(7) *Additional information.* Prior to issuing an order granting or denying a waiver, the department may request additional information from the petitioner relative to the petition and surrounding circumstances. If the petition was not filed in a contested case, the department may, on its own motion or at the petitioner's request, schedule a telephonic or in-person meeting between the petitioner and the department director or the director's designee.

178.1(8) *Notice.* The department shall acknowledge a petition upon receipt. Except where otherwise provided by law, every petition shall be served by the petitioner upon each of the parties of record of the proceeding and on all other persons identified in the petition for waiver as affected by the petition, simultaneously with the filing. The petitioner shall serve the notice on all persons to whom notice is required by any provision of law and provide a written statement to the department attesting that notice has been provided. In addition, the department may give notice to other persons.

178.1(9) *Hearing procedures.* The provisions of Iowa Code sections 17A.10 to 17A.18A regarding contested case hearings shall apply to any petition for a waiver filed within a contested case. A person who objects to a denial of a waiver in proceedings other than a contested case hearing may make an informal appearance before the department director, or the director's designee, to request reconsideration.

178.1(10) *Ruling.* An order granting or denying a waiver shall be in writing and shall contain a reference to the particular person and rule or portion thereof to which the order pertains, a statement of the relevant facts and reasons upon which the action is based, and a description of the precise scope and duration of the waiver if one is issued.

a. Department discretion. The final decision on whether the circumstances justify the granting of a waiver shall be made at the sole discretion of the department upon consideration of all relevant factors. Each petition for a waiver shall be evaluated by the department based on the unique, individual circumstances set out in the petition.

b. Burden of persuasion. The burden of persuasion rests with the petitioner to demonstrate by clear and convincing evidence that the department should exercise its discretion to grant a waiver from a department rule.

c. Narrowly tailored exception. A waiver, if granted, shall provide the narrowest exception possible to the provisions of a rule.

d. Administrative deadlines. When the rule from which a waiver is sought establishes administrative deadlines, the department shall balance the special individual circumstances of the petitioner with the overall goal of uniform treatment of all similarly situated persons.

e. Conditions. The department may place any condition on a waiver that the department finds desirable to protect the public health, safety, and welfare.

f. Time period of waiver. A waiver shall not be permanent unless the petitioner can show that a temporary waiver would be impracticable. If a temporary waiver is granted, there is no automatic right

to renewal. At the sole discretion of the department, a waiver may be renewed if the department finds that grounds for a waiver continue to exist.

g. *Time for ruling.* The department shall grant or deny a petition for a waiver as soon as practicable but, in any event, shall do so within 120 days of its receipt unless the petitioner agrees to a later date. However, if a petition is filed in a contested case, the department shall grant or deny the petition no later than the time at which the final decision in that contested case is issued.

h. *When deemed denied.* Failure of the department to grant or deny a petition within the required time period shall be deemed a denial of that petition by the department. However, the department shall remain responsible for issuing an order denying a waiver.

i. *Service of order.* Within seven days of its issuance, any order issued under this rule shall be transmitted to the petitioner or the person to whom the order pertains and to any other person entitled to such notice by any provision of law.

178.1(11) *Public availability.* All orders granting or denying a waiver petition shall be indexed, filed, and available for public inspection as provided in Iowa Code section 17A.3. Petitions for a waiver and orders granting or denying a waiver petition are public records under Iowa Code chapter 22. Some petitions or orders may contain information the department is authorized or required to keep confidential. The department may accordingly redact confidential information from petitions or orders prior to public inspection.

178.1(12) *Summary reports.* Semiannually, the department shall prepare a summary report identifying the rules for which a waiver has been granted or denied, the number of times a waiver was granted or denied for each rule, a citation to the statutory provisions implemented by these rules, and a general summary of the reasons justifying the department's actions on waiver requests. If practicable, the report shall detail the extent to which the granting of a waiver has affected the general applicability of the rule itself. Copies of this report shall be available for public inspection and shall be provided semiannually to the administrative rules coordinator and the administrative rules review committee.

178.1(13) *Cancellation of a waiver.* A waiver issued by the department pursuant to this rule may be withdrawn, canceled, or modified if, after appropriate notice and hearing, the department issues an order finding any of the following:

a. The petitioner or the person who was the subject of the waiver order withheld or misrepresented material facts relevant to the propriety or desirability of the waiver; or

b. The alternative means for ensuring that the public health, safety and welfare will be adequately protected after issuance of the waiver order have been insufficient; or

c. The subject of the waiver order has failed to comply with all conditions contained in the order.

178.1(14) *Violations.* A violation of a condition in a waiver order shall be treated as a violation of the particular rule for which the waiver was granted. As a result, the recipient of a waiver under this rule who violates a condition of the waiver may be subject to the same remedies or penalties as a person who violates the rule at issue.

178.1(15) *Defense.* After the department issues an order granting a waiver, the order is a defense within its terms and the specific facts indicated therein only for the person to whom the order pertains in any proceeding in which the rule in question is sought to be invoked.

178.1(16) *Judicial review.* Judicial review of the department's decision to grant or deny a waiver petition may be taken in accordance with Iowa Code chapter 17A.

641—178.2(17A,135) Sample petition for waiver. A petition for waiver filed in accordance with 641—178.1(17A,135) must meet the requirements specified therein and must substantially conform to the following form:

BEFORE THE DEPARTMENT OF PUBLIC HEALTH

Petition by (name of petitioner) for the waiver/variance of (insert rule citation) relating to (insert the subject matter).	PETITION FOR WAIVER/VARIANCE

1. Provide petitioner's (person asking for a waiver or variance) name, address, and telephone number. Also include the name, address, and telephone number of the petitioner's legal representative, if applicable, and a statement indicating the person to whom communications concerning the petition should be directed.

2. Describe and cite the specific rule from which a waiver is requested.

3. Describe the specific waiver requested, including the precise scope and time period for which the waiver will extend.

4. Explain the relevant facts and reasons that the petitioner believes justify a waiver. Include in your answer all of the following:

a. Why applying the rule would result in undue hardship to the petitioner;

b. Why waiving the rule would not prejudice the substantial legal rights of any person;

c. Whether the provisions of the rule subject to the waiver are specifically mandated by statute or another provision of law; and

d. How substantially equal protection of public health, safety, and welfare will be afforded by a means other than that prescribed in the particular rule for which the waiver is requested.

5. Provide a history of any prior contacts between the department and petitioner relating to the regulated activity, license, registration, certification or permit that would be affected by the waiver. Include a description of each affected license, registration, certification, or permit held by the petitioner, any formal charges filed, any notices of violation, any contested case hearings held, or any investigations related to the regulated activity, license, registration, certification, or permit.

6. Provide information known to the petitioner regarding the department's action in similar circumstances.

7. Provide the name, address, and telephone number of any public agency or political subdivision that also regulates the activity in question or that might be affected by the granting of the petition.

8. Provide the name, address, and telephone number of any person or entity that would be adversely affected by the granting of the waiver.

9. Provide the name, address, and telephone number of any person with knowledge of the relevant facts relating to the proposed waiver.

10. Provide signed releases of information authorizing persons with knowledge regarding the request to furnish the department with information relevant to the waiver.

I hereby attest to the accuracy and truthfulness of the above information.

_____ _____

Petitioner's signature Date

These rules are intended to implement Iowa Code section 17A.9A and chapter 135.

[Filed 3/18/98, Notice 1/28/98—published 4/8/98, effective 5/13/98]

[Filed 5/10/01, Notice 2/21/01—published 5/30/01, effective 7/4/01]

CHAPTER 179
Reserved

CHAPTER 180
HOSPITAL PROTOCOL FOR DONOR REQUESTS
Rescinded IAB 4/4/90, effective 5/9/90; see 641—51.4(5) to 641—51.4(11)

CHAPTERS 181 to 185
Reserved

CHAPTER 186
GOVERNMENTAL PUBLIC HEALTH ADVISORY BODIES

641—186.1(135A) Purpose. The governmental public health advisory council and the governmental public health evaluation committee shall advise the department regarding the coordination and implementation of the voluntary accreditation of designated local public health agencies and of the department and the evaluation of the accreditation program and governmental public health system.
[**ARC 9246B**, IAB 12/1/10, effective 1/5/11]

641—186.2(135A) Definitions. For the purposes of this chapter, the following definitions apply:

"Committee" means the governmental public health evaluation committee as established in 2009 Iowa Code Supplement section 135A.5.

"Council" means the governmental public health advisory council as established in 2009 Iowa Code Supplement section 135A.4.

"Department" means the Iowa department of public health.

"Designated local public health agency" means an entity that is either governed by or contractually responsible to a local board of health and designated by the local board to comply with the Iowa public health standards for a jurisdiction.

"Director" means the director of the Iowa department of public health.
[**ARC 9246B**, IAB 12/1/10, effective 1/5/11]

641—186.3(135A) Roles and responsibilities of advisory bodies. Two advisory bodies shall provide guidance to the department regarding the governmental public health system.

186.3(1) A governmental public health advisory council is established to advise the department and make policy recommendations to the department concerning administration, implementation, and coordination of 2009 Iowa Code Supplement chapter 135A and to make recommendations to the department regarding the governmental public health system.

186.3(2) The council shall annually provide a report to the department by July 1.

186.3(3) A governmental public health evaluation committee is established to develop and implement the evaluation of the governmental public health system and voluntary accreditation program as described in 2009 Iowa Code Supplement section 135A.5.

186.3(4) The committee shall annually provide a report to the department by July 1.

186.3(5) Recommendations from the council and committee shall be provided to the director in writing. The director may provide those recommendations to the state board of health.

186.3(6) Communication. The council and committee shall ensure communication between the two bodies by:

a. Providing regular updates to the other body through written reports at each meeting.

b. Stipulating that the chairperson and vice chairperson of the committee and council hold semiannual conference calls.

c. Meeting together at least biennially.

d. Responding to requests from one body to the other that shall be made in writing and appear in new business on the agenda of the next regularly scheduled meeting.
[**ARC 9246B**, IAB 12/1/10, effective 1/5/11]

641—186.4(135A) Officers.

186.4(1) The officers of the council and committee shall be a chairperson and vice chairperson for each body.

a. The officers shall be elected at the first meeting each September.

b. Vacancy in the office of chairperson shall be filled by the vice chairperson.

c. Vacancy in the office of vice chairperson shall be filled by election at the next regularly scheduled meeting after the vacancy occurs.

186.4(2) Duties of officers.

a. The chairperson of the council shall preside at all meetings of the council, and the chairperson of the committee shall preside at all meetings of the committee.

b. Robert's Rules of Order shall govern all meetings.

c. If the chairperson is absent or unable to act, the vice chairperson shall perform the duties of the chairperson. When so acting, the vice chairperson shall have all the powers of and be subject to all the restrictions upon the chairperson.

d. The vice chairperson shall also perform such other duties as may be assigned by the chairperson.
[**ARC 9246B**, IAB 12/1/10, effective 1/5/11]

641—186.5(135A) Members of advisory bodies.

186.5(1) The director, pursuant to 2009 Iowa Code Supplement sections 135A.4 and 135A.5, shall appoint members of the council and committee.

a. Members shall serve for a term of two years and may be reappointed for a maximum of three consecutive terms. Initial appointments shall be in staggered terms.

b. Vacancies shall be filled in the same manner in which the original appointments were made for the balance of the unexpired term.

186.5(2) A member's designee shall meet the same criteria for which the member was appointed. The member shall notify the department when the designee will be in attendance. The designee shall have voting rights.

186.5(3) Two consecutive unexcused absences of a member or designee shall be grounds for the director to consider dismissal of the council member or committee member and to appoint another. The department staff person assigned to the council or committee is charged with providing notification of absences to the director.
[**ARC 9246B**, IAB 12/1/10, effective 1/5/11]

641—186.6(135A) Meetings. The council and committee shall each hold a meeting at least quarterly. Notice of routine meetings and agenda should be made available to the members a minimum of five working days prior to the meeting.

186.6(1) Persons wishing to submit materials for consideration by the council or committee should submit the materials electronically to the department at least 14 days in advance of the scheduled meeting to ensure that members have adequate time to review the materials.

186.6(2) Persons wishing to make a presentation to the council or committee shall submit the request to the department not less than 14 days prior to the meeting. Presentations upon matters appearing on the agenda may be made either at the discretion of the chairperson or the department.

186.6(3) All meetings are open to the public in accordance with the open meetings law, Iowa Code chapter 21.

186.6(4) The council or committee may conduct a meeting by electronic means pursuant to Iowa Code section 21.8.

186.6(5) A simple majority of appointed members shall be considered a quorum.

186.6(6) Any member or member's designee who is unable to attend a meeting shall notify the department at least 24 hours prior to the start of a regularly scheduled meeting; a meeting may be canceled if a quorum will not be present.

186.6(7) When a quorum is present, a position is carried by affirmative vote of the majority of those present.

186.6(8) Minutes. Minutes of all meetings showing the date, time, place, members present, members absent, and the general topics discussed shall be kept. The minutes shall reflect the actions agreed upon by the members for topics requiring the members' input or consensus.
[**ARC 9246B**, IAB 12/1/10, effective 1/5/11]

641—186.7(135A) Conflict of interest. A conflict of interest exists when members of the council or committee participate in a way that directly affects the financial interests of the council or committee members.

186.7(1) To avoid conflict of interest issues, council or committee members who have a financial interest in an action must abstain from participating in the entire process including discussion and voting.

186.7(2) The council or committee members who have or think they may have a conflict of interest shall declare that there is or may be a conflict of interest and request a determination from the department.

186.7(3) If a conflict of interest is determined to exist, council or committee members shall abstain from voting and shall be recorded as abstaining when votes are taken.
[**ARC 9246B**, IAB 12/1/10, effective 1/5/11]

641—186.8(135A) Subcommittees. The council and committee may designate one or more subcommittees to perform such duties as may be deemed necessary.
[**ARC 9246B**, IAB 12/1/10, effective 1/5/11]

These rules are intended to implement 2009 Iowa Code Supplement sections 135A.4 and 135A.5.

[Filed ARC 9246B (Notice ARC 9093B, IAB 9/22/10), IAB 12/1/10, effective 1/5/11]

CHAPTERS 187 to 189
Reserved

CHAPTER 190
CONSENT FOR THE SALE OF GOODS AND SERVICES
Rescinded IAB 4/11/07, effective 5/16/07

CHAPTER 191
ADVISORY BODIES OF THE DEPARTMENT

641—191.1(135) Definitions. For the purpose of these rules, the following definitions shall apply:

"Advisory body" means a council, committee, or task force whose members have been appointed by the governor, the director or the director's designee to provide advice or technical assistance to the department in an identified area of public health. An advisory body has no substantive authority to affect individual rights, duties or responsibilities.

"Chairperson" means the chair of the advisory body who has been elected by the majority of the advisory body's members.

"Department" means the Iowa department of public health.

"Designee" means the individual designated by the director.

"Director" means the director of public health.

"Governor" means the governor of Iowa.

641—191.2(135) Purpose. The department may from time to time establish an advisory body for the provision of advice or technical assistance in an identified area of public health. These rules are applicable only to an advisory body established for a period to exceed one year or more. These rules do not apply to an advisory body governed by other administrative rule or statute.

641—191.3(135) Appointment. Members of the advisory body shall be appointed by the governor, director, or designee. The appointments, unless provided otherwise by law, shall be for three-year staggered terms which shall expire on June 30.

191.3(1) Vacancies shall be filled in the same manner in which the original appointments were made for the balance of the unexpired term.

191.3(2) Absences. Three consecutive unexcused absences shall be grounds for the director to consider dismissal of the advisory body member and to appoint another. The chairperson of the advisory body is charged with providing notification of absences to the department.

[**ARC 8797B**, IAB 6/2/10, effective 7/7/10]

641—191.4(135) Officers.

191.4(1) Officers of the advisory body shall be a chairperson and a vice chairperson and shall be elected at the first meeting of each fiscal year unless designated at the time of appointment.

a. Vacancies in the office of chairperson shall be filled by elevation of the vice chairperson.

b. Vacancies in the office of vice chairperson shall be filled by election at the next meeting after the vacancy occurs.

191.4(2) Duties of officers.

a. The chairperson shall:

(1) Preside at all meetings of the advisory body,

(2) Appoint such subcommittees as deemed necessary, and

(3) Designate the chairperson of each subcommittee.

b. The vice chairperson shall:

(1) Perform the duties of the chairperson if the chairperson is absent or unable to act. When so acting, the vice chairperson shall have all the powers of and be subject to all restrictions upon the chairperson.

(2) Perform such other duties as may be assigned by the chairperson.

[**ARC 8797B**, IAB 6/2/10, effective 7/7/10]

641—191.5(135) Meetings.

191.5(1) The advisory body shall establish a meeting schedule on an annual basis to conduct its business.

a. Meetings may be scheduled as business requires, but notice to members must be at least five working days prior to the meeting date.

b. A four-week notice is encouraged to accommodate the schedules of professional members.

191.5(2) Robert's Rules of Order shall govern all meetings.

191.5(3) Action on any issue before the advisory body can only be taken by a majority vote of the entire membership.

191.5(4) The advisory body shall maintain information sufficient to indicate the vote of each member present.

[**ARC 8797B**, IAB 6/2/10, effective 7/7/10]

641—191.6(135) Subcommittees. The advisory body may designate one or more subcommittees to perform such duties as may be deemed necessary.

641—191.7(135) Expenses of advisory body members. The following may be considered necessary expenses for reimbursement of advisory body members when incurred on behalf of advisory body business and are subject to established state reimbursement rates:

1. Reimbursement for travel in a private car.
2. Actual lodging and meal expenses including sales tax on lodging and meals.
3. Actual expense of public transportation.

641—191.8(135) Gender balance. All advisory bodies of the department appointed by the governor, director or designee, if not otherwise provided by law, shall be gender-balanced.

These rules are intended to implement Iowa Code section 135.11.

[Filed 9/17/93, Notice 6/23/93—published 10/13/93, effective 11/17/93]

[Filed 1/11/96, Notice 12/6/95—published 1/31/96, effective 3/6/96]

[Filed ARC 8797B (Notice ARC 8630B, IAB 3/24/10), IAB 6/2/10, effective 7/7/10]

CHAPTER 192
CHILD SUPPORT NONCOMPLIANCE

641—192.1(252J) Definitions. For the purpose of this chapter, the following definitions shall apply:

"Applicant" means an individual who is seeking the issuance of a license.

"Certificate of noncompliance" means a document provided by the child support recovery unit of the department of human services certifying that the named applicant or licensee has defaulted on an obligation owed to or collected by the child support recovery unit.

"Department" means the department of public health.

"License" means a license, certification, registration, permit, approval, renewal, or other similar authorization issued to a person by a licensing authority which evidences the granting of authority to engage in a profession, occupation, or business.

"Licensing authority" means a board, commission, or any other entity of the department which has authority within this state to suspend or revoke a license or deny the renewal or issuance of a license authorizing a person to engage in a business, occupation, or profession.

[**ARC 8798B**, IAB 6/2/10, effective 7/7/10]

641—192.2(252J) Issuance or renewal of a license—denial. The licensing authority shall deny the issuance or renewal of a license upon the receipt of a certificate of noncompliance from the child support recovery unit of the department of human services according to the procedures in Iowa Code chapter 252J. In addition to the procedures set forth in Iowa Code chapter 252J, the following shall apply.

192.2(1) The notice required by Iowa Code section 252J.8 shall be served upon the applicant or licensee by restricted certified mail, return receipt requested, or personal service in accordance with Iowa Rule of Civil Procedure 1.305. Alternatively, the applicant or licensee may accept service personally or through authorized counsel.

192.2(2) The effective date of the denial of the issuance or renewal of a license, as specified in the notice required by Iowa Code section 252J.8, shall be 60 days following service of the notice upon the applicant or licensee.

192.2(3) The licensing authority's administrator is authorized to prepare and serve the notice required by Iowa Code section 252J.8, upon the applicant or licensee.

192.2(4) Applicants and licensees shall keep the licensing authority informed of all court actions, and all child support recovery unit actions taken under or in connection with Iowa Code chapter 252J, and shall provide the licensing authority copies, within 7 days of filing or issuance, of all applications filed with the district court pursuant to Iowa Code section 252J.9, all court orders entered in such actions, and withdrawals of certificates of noncompliance by the child support recovery unit.

192.2(5) All licensing authority fees required for application, license renewal, or license reinstatement must be paid by applicants or licensees before a license will be issued, renewed, or reinstated after the licensing authority has denied the issuance or renewal of a license pursuant to Iowa Code chapter 252J.

192.2(6) In the event an applicant or licensee timely files a district court action following service of a licensing authority notice pursuant to Iowa Code sections 252J.8 and 252J.9, the licensing authority shall continue with the intended action described in the notice upon the receipt of a court order lifting the stay, dismissing the action, or otherwise directing the licensing authority to proceed. For purposes of determining the effective date of the denial of the issuance or renewal of a license, the licensing authority shall count the number of days before the action was filed and the number of days after the action was disposed of by the court.

192.2(7) The licensing authority shall notify the applicant or licensee in writing through regular first-class mail, or such other means as the licensing authority determines appropriate in the circumstances, within 10 days of the effective date of the denial of the issuance or renewal of a license and shall similarly notify the applicant or licensee if the license is issued or renewed following the licensing authority's receipt of a withdrawal of the certificate of noncompliance.

[**ARC 8798B**, IAB 6/2/10, effective 7/7/10]

641—192.3(252J) Suspension or revocation of a license. The licensing authority shall suspend or revoke a license upon the receipt of a certificate of noncompliance from the child support recovery unit of the department of human services according to the procedures set forth in Iowa Code chapter 252J. In addition to the procedures set forth in Iowa Code chapter 252J, the following shall apply.

192.3(1) The notice required by Iowa Code section 252J.8 shall be served upon the licensee by restricted certified mail, return receipt requested, or personal service in accordance with Iowa Rule of Civil Procedure 1.305. Alternatively, the licensee may accept service personally or through authorized counsel.

192.3(2) The effective date of the suspension or revocation of a license, as specified in the notice required by Iowa Code section 252J.8, shall be 60 days following service of the notice upon the licensee.

192.3(3) The licensing authority's administrator is authorized to prepare and serve the notice required by Iowa Code section 252J.8 and is directed to notify the licensee that the license will be suspended unless the license is already suspended on other grounds. In the event that the license is on suspension, the administrator shall notify the licensee of the licensing authority's intention to revoke the license.

192.3(4) Licensees shall keep the licensing authority informed of all court actions, and all child support recovery unit action taken under or in connection with Iowa Code chapter 252J, and shall provide the licensing authority copies, within 7 days of filing or issuance, of all applications filed with the district court pursuant to Iowa Code section 252J.9, all court orders entered in such actions and withdrawals of certificates of noncompliance by the child support recovery unit.

192.3(5) All licensing authority fees required for license renewal or license reinstatement must be paid by licensees before a license will be reinstated after the licensing authority has suspended or revoked a license pursuant to Iowa Code chapter 252J.

192.3(6) In the event a licensee files a district court action following service of a licensing authority notice pursuant to Iowa Code sections 252J.8 and 252J.9, the licensing authority shall continue with the intended action described in the notice upon the receipt of a court order lifting the stay, dismissing the action, or otherwise directing the licensing authority to proceed. For purposes of determining the effective date of the suspension or revocation, the licensing authority shall count the number of days before the action was filed and the number of days after the action was disposed of by the court.

192.3(7) The licensing authority shall notify the licensee in writing through regular first-class mail, or such other means as the licensing authority determines appropriate in the circumstances, within 10 days of the effective date of the suspension or revocation of a license and shall similarly notify the licensee if the license is reinstated following the licensing authority's receipt of a withdrawal of the certificate of noncompliance.

[**ARC 8798B**, IAB 6/2/10, effective 7/7/10]

641—192.4(17A,22,252J) Sharing of information. Notwithstanding any statutory confidentiality provision, the licensing authority may share information with the child support recovery unit of the department of human services through manual or automated means for the sole purpose of identifying applicants or licensees subject to enforcement under Iowa Code chapter 252J or Iowa Code chapter 598.

[**ARC 8798B**, IAB 6/2/10, effective 7/7/10]

These rules are intended to implement Iowa Code chapter 252J.

[Filed emergency 1/11/96 after Notice 12/6/95—published 1/31/96, effective 1/11/96]

[Filed ARC 8798B (Notice ARC 8631B, IAB 3/24/10), IAB 6/2/10, effective 7/7/10]

CHAPTER 194
NONPAYMENT OF STATE DEBT

641—194.1(272D) Definitions. For the purpose of this chapter, the following definitions shall apply.

"Applicant" means an individual who is seeking the issuance of a license.

"Centralized collection unit" means the centralized collection unit of the Iowa department of revenue.

"Certificate of noncompliance" means a document provided by the centralized collection unit of the department of revenue certifying that the named applicant or licensee has an outstanding liability placed with the unit and has not entered into an approved payment plan to pay the liability.

"Denial notice" means a licensing authority notification denying an application for the issuance or renewal of a license as required by Iowa Code chapter 272D.

"Department" means the department of public health.

"License" means a license, certification, registration, permit, approval, renewal, or other similar authorization issued to a person by a licensing authority which evidences the granting of authority to engage in a profession, occupation, or business.

"Licensing authority" means a board, commission, or any other entity of the department which has authority within this state to suspend or revoke a license or deny the renewal or issuance of a license authorizing a person to engage in a business, occupation, or profession.

"Revocation or suspension notice" means a licensing authority notification suspending a license for an indefinite or specified period of time or a notification revoking a license as required by Iowa Code chapter 272D.

"Withdrawal certificate" means a document provided by the centralized collection unit certifying that the certificate of noncompliance is withdrawn and that the licensing authority may proceed with issuance, reinstatement, or renewal of a license.

[**ARC 7671B**, IAB 4/8/09, effective 5/13/09]

641—194.2(272D) Issuance or renewal of a license—denial. The licensing authority shall deny the issuance or renewal of a license upon the receipt of a certificate of noncompliance from the centralized collection unit. This rule shall apply in addition to the procedures set forth in Iowa Code chapter 272D.

194.2(1) *Service of denial notice.* Notice shall be served upon the applicant or licensee by certified mail, return receipt requested; by personal service; or through authorized counsel.

194.2(2) *Effective date of denial.* The effective date of the denial of the issuance or renewal of a license, as specified in the denial notice, shall be 60 days following service of the denial notice upon the applicant or licensee.

194.2(3) *Preparation and service of denial notice.* The licensing authority is authorized to prepare and serve the denial notice upon the applicant or licensee.

194.2(4) *Licensees and applicants responsible to inform licensing authority.* Licensees and applicants shall keep the licensing authority informed of all court actions and all centralized collection unit actions taken under or in connection with Iowa Code chapter 272D. Licensees and applicants shall also provide the licensing authority copies, within seven days of filing or issuance, of all applications filed with the district court pursuant to Iowa Code chapter 272D, all court orders entered in such actions, and any withdrawals of certificates issued by the centralized collection unit.

194.2(5) *Reinstatement following license denial.* All licensing authority fees required for application, license renewal, or license reinstatement must be paid by applicants or licensees before a license will be issued, renewed, or reinstated after the licensing authority has denied the issuance or renewal of a license pursuant to Iowa Code chapter 272D.

194.2(6) *Effect of filing in district court.* In the event an applicant or a licensee files a timely district court action following service of a denial notice by a licensing authority, the licensing authority shall continue with the intended action described in the denial notice upon the receipt of a court order lifting the stay, dismissing the action, or otherwise directing the licensing authority to proceed. For purposes of determining the effective date of the denial of the issuance or renewal of a license, the licensing authority

shall count the number of days before the action was filed and the number of days after the action was disposed of by the court.

194.2(7) *Final notification.* The licensing authority shall notify the applicant or licensee in writing through regular first-class mail, or by such other means as the licensing authority determines appropriate in the circumstances, within ten days of the effective date of the denial of the issuance or renewal of a license, and shall similarly notify the applicant or licensee if the license is issued or renewed following the licensing authority's receipt of a withdrawal certificate.

[**ARC 7671B**, IAB 4/8/09, effective 5/13/09]

641—194.3(272D) Suspension or revocation of a license. The licensing authority shall suspend or revoke a license upon the receipt of a certificate of noncompliance from the centralized collection unit in accordance with the procedures set forth in Iowa Code chapter 272D. This rule shall apply in addition to the procedures set forth in Iowa Code chapter 272D.

194.3(1) *Service of revocation or suspension notice.* A revocation or suspension notice shall be served upon the licensee by certified mail, return receipt requested; by personal service; or through authorized counsel.

194.3(2) *Effective date of revocation or suspension.* The effective date of the suspension or revocation of a license, as specified in the revocation or suspension notice, shall be 60 days following service of the notice upon the licensee.

194.3(3) *Preparation and service of revocation or suspension notice.* The licensing authority is authorized to prepare and serve the revocation or suspension notice upon the licensee and is directed to notify the licensee that the license will be suspended, unless the license is already suspended on other grounds. In the event that the license is on suspension, the licensing authority shall notify the licensee of the licensing authority's intention to revoke the license.

194.3(4) *Licensee responsible to inform licensing authority.* The licensee shall keep the licensing authority informed of all court actions and all centralized collection unit actions taken under or in connection with Iowa Code chapter 272D. Licensees shall also provide the licensing authority copies, within seven days of filing or issuance, of all applications filed with the district court pursuant to Iowa Code chapter 272D, all court orders entered in such actions, and any withdrawal certificates issued by the centralized collection unit.

194.3(5) *Reinstatement following license suspension or revocation.* A licensee shall pay all licensing authority fees required for license renewal or license reinstatement before a license will be reinstated after the licensing authority has suspended or revoked a license pursuant to Iowa Code chapter 272D.

194.3(6) *Effect of filing in district court.* In the event a licensee files a timely district court action pursuant to Iowa Code chapter 272D, and following service of a revocation or suspension notice, the licensing authority shall continue with the intended action described in the revocation or suspension notice upon the receipt of a court order lifting the stay, dismissing the action, or otherwise directing the licensing authority to proceed. For purposes of determining the effective date of the license suspension or revocation, the licensing authority shall count the number of days before the action was filed and the number of days after the action was disposed of by the court.

194.3(7) *Final notification.* The licensing authority shall notify the licensee in writing through regular first-class mail, or by such other means as the licensing authority determines appropriate in the circumstances, within ten days of the effective date of the suspension or revocation of a license, and shall similarly notify the licensee if the license is reinstated following the licensing authority's receipt of a withdrawal certificate.

[**ARC 7671B**, IAB 4/8/09, effective 5/13/09]

641—194.4(272D) Sharing of information. Notwithstanding any statutory confidentiality provision, the department or licensing authority may share information with the centralized collection unit of the department of revenue through automated means for the sole purpose of identifying applicants or licensees subject to enforcement pursuant to Iowa Code chapter 272D.

[**ARC 7671B**, IAB 4/8/09, effective 5/13/09]

These rules are intended to implement Iowa Code chapter 272D.

[Filed ARC 7671B (Notice ARC 7540B, IAB 1/28/09), IAB 4/8/09, effective 5/13/09]

CHAPTER 195
STUDENT LOAN DEFAULT/NONCOMPLIANCE WITH AGREEMENT FOR PAYMENT OF OBLIGATION

641—195.1(261) General definitions. For the purposes of this chapter, the following definitions shall apply:

"Applicant" means an individual who is seeking the issuance of a license.

"Certificate of noncompliance" means written certification from the college student aid commission to the licensing authority certifying that the licensee has defaulted on an obligation owed to or collected by the commission.

"Commission" means the college student aid commission.

"Department" means the department of public health.

"License" means a license, certification, registration, permit, approval, renewal, or other similar authorization issued to a person by a licensing authority which evidences the granting of authority to engage in a profession, occupation, or business.

"Licensing authority" means a board, commission, or any other entity of the department which has authority within this state to suspend or revoke a license or deny the renewal or issuance of a license authorizing a person to engage in a business, occupation, or profession.

[**ARC 8800B**, IAB 6/2/10, effective 7/7/10]

641—195.2(261) Issuance or renewal of a license—denial. The licensing authority shall deny the issuance or renewal of a license upon receipt of a certificate of noncompliance from the college student aid commission according to the procedures set forth in Iowa Code sections 261.121 to 261.127.

195.2(1) In order to process the certificate of noncompliance received by the licensing authority, the licensing authority will maintain records of licensees by name, current known address, and social security number.

195.2(2) Upon receipt of a certificate of noncompliance duly issued by the commission, the licensing authority shall initiate procedures for denial of issuance or renewal of licensure.

195.2(3) The licensing authority shall provide notice to the licensee or applicant informing that person of the licensing authority's intent to deny the license, and said notice shall be served by restricted certified mail, return receipt requested, or by personal service in accordance with the Iowa Rules of Civil Procedure. The notice shall state all of the following:

a. The licensing authority intends to deny issuance or renewal of an individual's license due to the receipt of a certificate of noncompliance from the commission.

b. The individual must contact the commission to schedule a conference or to otherwise obtain a withdrawal of a certificate of noncompliance.

c. Unless the commission furnishes a withdrawal of a certificate of noncompliance to the licensing authority within 30 days of the issuance of the notice under this subrule, the individual's license shall be denied.

195.2(4) The applicant or licensee served with a notice under 195.2(3) shall not have a right to a hearing before the licensing authority but may request a court hearing pursuant to Iowa Code section 261.127. Such court hearing must be requested within 30 days of the provision of notice.

195.2(5) The effective date of the denial of the issuance or renewal of a license, as specified in the notice required by Iowa Code section 261.126, shall be 60 days following service of the notice upon the applicant or licensee.

195.2(6) The licensing authority's administrator is authorized to prepare and serve the notice required by Iowa Code section 261.126 upon the applicant or licensee.

195.2(7) All licensing authority fees required for application, license renewal, or license reinstatement must be paid by applicants or licensees and all continuing education requirements must be met before a license will be issued, renewed, or reinstated after the licensing authority has denied the issuance or renewal of a license pursuant to Iowa Code chapter 261.

195.2(8) In the event an applicant or licensee timely files a district court action following service of a licensing authority notice pursuant to Iowa Code section 261.126, the licensing authority shall continue with the intended action described in the notice upon the receipt of a court order lifting the stay, dismissing the action, or otherwise directing the licensing authority to proceed.

195.2(9) Upon the filing of a district court action, the applicant or licensee shall promptly file with the licensing authority a copy of the petition filed with the district court. In addition, the applicant or licensee shall provide the licensing authority with copies of all court orders and rulings entered in such action within seven days of the action.

195.2(10) For purposes of determining the effective date of the denial of the issuance or renewal of a license, the licensing authority shall count the number of days before the action was filed and the number of days after the action was disposed of by the court.

[**ARC 8800B**, IAB 6/2/10, effective 7/7/10]

641—195.3(261) Suspension or revocation of a license. The licensing authority shall suspend or revoke a license upon receipt of a certificate of noncompliance from the college student aid commission according to the procedures set forth in Iowa Code sections 261.121 to 261.127. In addition to the provisions contained in those sections, the following shall apply:

195.3(1) In order to process the certificate of noncompliance received by the licensing authority, the licensing authority will maintain records of licensees by name, current known address, and social security number.

195.3(2) Upon receipt of a certificate of noncompliance duly issued by the commission, the licensing authority shall initiate procedures for suspension or revocation of licensure.

195.3(3) The licensing authority shall provide notice to the licensee informing the individual of the licensing authority's intent to suspend or revoke the license, and said notice shall be served by restricted certified mail, return receipt requested, or by personal service in accordance with the Iowa Rules of Civil Procedure. The notice shall state all of the following:

a. The licensing authority intends to suspend or revoke an individual's license due to the receipt of a certificate of noncompliance from the commission.

b. The individual must contact the commission to schedule a conference or to otherwise obtain a withdrawal of a certificate of noncompliance.

c. Unless the commission furnishes a withdrawal of a certificate of noncompliance to the licensing authority within 30 days of the issuance of the notice under this subrule, the individual's license shall be suspended or revoked.

195.3(4) The licensee served with a notice under 195.3(3) shall not have a right to a hearing before the licensing authority but may request a court hearing pursuant to Iowa Code section 261.127. Such court hearing must be requested within 30 days of the provision of notice.

195.3(5) The effective date of the suspension or revocation of a license, as specified in the notice required by Iowa Code section 261.126, shall be 60 days following service of the notice upon the licensee.

195.3(6) The licensing authority's administrator is authorized to prepare and serve the notice required by Iowa Code section 261.126 upon the licensee.

195.3(7) All licensing authority fees required for application, license renewal, or license reinstatement must be paid by applicants or licensees and all continuing education requirements must be met before a license will be issued, renewed, or reinstated after the licensing authority has suspended or revoked a license pursuant to Iowa Code chapter 261.

195.3(8) In the event a licensee timely files a district court action following service of a licensing authority notice pursuant to Iowa Code section 261.126, the licensing authority shall continue with the intended action described in the notice upon the receipt of a court order lifting the stay, dismissing the action, or otherwise directing the licensing authority to proceed.

195.3(9) Upon the filing of a district court action, the licensee shall promptly file with the licensing authority a copy of the petition filed with the district court. In addition, the licensee shall provide the licensing authority with copies of all court orders and rulings entered in such action within seven days of the action.

195.3(10) For purposes of determining the effective date of the suspension or revocation, the licensing authority shall count the number of days before the action was filed and the number of days after the action was disposed of by the court.
[**ARC 8800B**, IAB 6/2/10, effective 7/7/10]

641—195.4(17A,22,261) Sharing of information. Notwithstanding any statutory confidentiality provision, the licensing authority may share information with the commission for the sole purpose of identifying applicants or licensees subject to enforcement under Iowa Code chapter 261.
[**ARC 8800B**, IAB 6/2/10, effective 7/7/10]

These rules are intended to implement Iowa Code chapter 261.

[Filed 5/14/99, Notice 3/24/99—published 6/2/99, effective 7/7/99]
[Filed ARC 8800B (Notice ARC 8632B, IAB 3/24/10), IAB 6/2/10, effective 7/7/10]

CHAPTER 196
MILITARY SERVICE AND VETERAN RECIPROCITY

641—196.1(85GA,ch1116) Definitions.

"Department" means the department of public health.

"License" means a license, certification, registration, permit, approval, renewal, or other similar authorization issued to a person by a licensing authority which evidences the granting of authority to engage in a profession, occupation, or business.

"Licensing authority" means a board, commission, or any other entity of the department which has authority within this state to suspend or revoke a license or deny the renewal or issuance of a license authorizing a person to engage in a business, occupation, or profession.

"Military service" means honorably serving on federal active duty, state active duty, or national guard duty, as defined in Iowa Code section 29A.1; in the military services of other states, as provided in 10 U.S.C. Section 101(c); or in the organized reserves of the United States, as provided in 10 U.S.C. Section 10101.

"Military service applicant" means an individual requesting credit toward licensure for military education, training, or service obtained or completed in military service.

"Veteran" means an individual who meets the definition of "veteran" in Iowa Code section 35.1(2).

[**ARC 1749C**, IAB 12/10/14, effective 1/14/15]

641—196.2(85GA,ch1116) Military education, training, and service credit. A military service applicant may apply for credit for verified military education, training, or service toward any experience or educational requirement for licensure by submitting a military service application form to the licensing authority.

196.2(1) The application may be submitted with an application for licensure or examination, or prior to applying for licensure or to take an examination. No fee is required with submission of an application for military service credit.

196.2(2) The applicant shall identify the experience or educational licensure requirement to which the credit would be applied if granted. Credit shall not be applied to an examination requirement.

196.2(3) The applicant shall provide documents, military transcripts, a certified affidavit, or forms that verify completion of the relevant military education, training, or service, which may include, when applicable, the applicant's Certificate of Release or Discharge from Active Duty (DD Form 214) or Verification of Military Experience and Training (VMET) (DD Form 2586).

196.2(4) Upon receipt of a completed military service application, the licensing authority shall promptly determine whether the verified military education, training, or service will satisfy all or any part of the identified experience or educational qualifications for licensure.

196.2(5) The licensing authority shall grant credit requested in the application in whole or in part if the licensing authority determines that the verified military education, training, or service satisfies all or part of the experience or educational qualifications for licensure.

196.2(6) The licensing authority shall inform the military service applicant in writing of the credit, if any, given toward an experience or educational qualification for licensure or explain why no credit was granted. The applicant may request reconsideration upon submission of additional documentation or information.

196.2(7) A military service applicant who is aggrieved by the licensing authority's decision may request a contested case (administrative hearing) and may participate in a contested case by telephone. A request for a contested case shall be made within 30 days of issuance of the licensing authority's decision. The provisions of 641—Chapter 173 shall apply, except that no fees or costs shall be assessed against the military service applicant in connection with a contested case conducted pursuant to this subrule.

196.2(8) The licensing authority shall grant or deny the military service application prior to ruling on the application for licensure. The applicant shall not be required to submit any fees in connection with the licensure application unless the licensing authority grants the military service application. If

the licensing authority does not grant the military service application, the applicant may withdraw the licensure application or request that the licensure application be placed in pending status for up to one year or as mutually agreed. The withdrawal of a licensure application shall not preclude subsequent applications supported by additional documentation or information.
[**ARC 1749C**, IAB 12/10/14, effective 1/14/15]

641—196.3(85GA,ch1116) Veteran reciprocity.

196.3(1) A veteran with an unrestricted license in another jurisdiction may apply for licensure in Iowa through reciprocity. A veteran must pass any examinations required for licensure to be eligible for licensure through reciprocity and will be given credit for examinations previously passed when consistent with the licensing authority's laws and rules on examination requirements. A fully completed application for licensure submitted by a veteran under this subrule shall be given priority and shall be expedited.

196.3(2) Such an application shall contain all of the information required of all applicants for licensure who hold unrestricted licenses in other jurisdictions and who are applying for licensure by reciprocity, including, but not limited to, completion of all required forms, payment of applicable fees, disclosure of criminal or disciplinary history, and, if applicable, a criminal history background check. The applicant shall use the same forms as any other applicant for licensure by reciprocity and shall additionally provide such documentation as is reasonably needed to verify the applicant's status as a veteran under Iowa Code section 35.1(2).

196.3(3) Upon receipt of a fully completed licensure application, the licensing authority shall promptly determine if the professional or occupational licensing requirements of the jurisdiction where the veteran is licensed are substantially equivalent to the licensing requirements in Iowa. The licensing authority shall make this determination based on information supplied by the applicant and such additional information as the licensing authority may acquire from the applicable jurisdiction. As relevant to the license at issue, the licensing authority may consider the following factors in determining substantial equivalence: scope of practice, education and coursework, degree requirements, experience, and examinations required for licensure.

196.3(4) The licensing authority shall promptly grant a license to the veteran if the veteran is licensed in the same or similar profession in another jurisdiction whose licensure requirements are substantially equivalent to those required in Iowa, unless the applicant is ineligible for licensure based on other grounds, for example, the applicant's disciplinary or criminal background.

196.3(5) If the licensing authority determines that the licensure requirements in the jurisdiction in which the veteran is licensed are not substantially equivalent to those required in Iowa, the licensing authority shall promptly inform the veteran of the additional experience, education, or examinations required for licensure in Iowa. Unless the applicant is ineligible for licensure based on other grounds, such as disciplinary or criminal background, or the issuance of a provisional license is inconsistent with the licensing authority's enabling statute, the following shall apply:

a. If a veteran has not passed the required examination(s) for licensure, the veteran may not be issued a provisional license but may request that the licensure application be placed in pending status for up to one year or as mutually agreed to provide the veteran with the opportunity to satisfy the examination requirements.

b. If additional experience or education is required for the applicant's qualifications to be considered substantially equivalent, the applicant may request that the licensing authority issue a provisional license for a specified period of time during which the applicant will successfully complete the necessary experience or education. The licensing authority shall issue a provisional license for a specified period of time upon such conditions as the licensing authority deems reasonably necessary to protect the health, welfare or safety of the public unless the licensing authority determines that the deficiency is of a character that the public health, welfare or safety will be adversely affected if a provisional license is granted.

c. If a request for a provisional license is denied, the licensing authority shall issue an order fully explaining the decision and shall inform the applicant of the steps the applicant may take in order to receive a provisional license.

d. If a provisional license is issued, the application for full licensure shall be placed in pending status until the necessary experience or education has been successfully completed or the provisional license expires, whichever occurs first. The licensing authority may extend a provisional license on a case-by-case basis for good cause.

196.3(6) A veteran who is aggrieved by the licensing authority's decision to deny an application for a reciprocal license or a provisional license or is aggrieved by the terms under which a provisional license will be granted may request a contested case (administrative hearing) and may participate in a contested case by telephone. A request for a contested case shall be made within 30 days of issuance of the licensing authority's decision. The provisions of 641—Chapter 173 shall apply, except that no fees or costs shall be assessed against the veteran in connection with a contested case conducted pursuant to this subrule.

[**ARC 1749C**, IAB 12/10/14, effective 1/14/15]

These rules are intended to implement 2014 Iowa Acts, chapter 1116, section 34.

[Filed ARC 1749C (Notice ARC 1646C, IAB 10/1/14), IAB 12/10/14, effective 1/14/15]

CHAPTERS 197 to 199
Reserved

CHAPTER 200
STANDARDS COMMITTEE PROCEDURES—CHANGES IN STANDARDS
FOR THE STATE HEALTH PLAN
Rescinded IAB 5/30/90, effective 7/4/90

CHAPTER 201
ORGANIZED DELIVERY SYSTEMS

LICENSURE AND REGULATION

641—201.1(135,75GA,ch158) Purpose and scope. The following rules developed by the department of public health govern the organization and regulation of organized delivery systems, also referred to as accountable health plans, pursuant to the authority set forth by the Seventy-fifth General Assembly in Senate File 380, which can also be found in chapter 158 of the 1993 Iowa Acts. It is the intent of these rules to allow for flexibility in the formation of organized delivery systems while ensuring accountability for the cost, quality and access to health care for those they serve. This chapter shall apply to all organized delivery systems operating in this state or providing coverage to Iowa residents. This chapter is not intended to apply to entities that fall under the regulation of the division of insurance.

641—201.2(135,75GA,ch158) Definitions.

"Accountable health plan (AHP)" means a type of organized delivery system.

"Commissioner" means the commissioner of insurance.

"Coverage decision" means a final adverse decision based on medical necessity. This definition does not include a denial of coverage for a service or treatment specifically listed in plan or evidence of coverage documents as excluded from coverage.

"Department" means the department of public health.

"Director" means the director of the department of public health.

"Emergency medical condition" means a medical condition that manifests itself by symptoms of sufficient severity, including but not limited to severe pain, that an ordinarily prudent person, possessing average knowledge of medicine and health, could reasonably expect the absence of immediate medical attention to result in one of the following:

1. Placing the health of the individual, or with respect to a pregnant woman, the health of the woman or her unborn child, in serious jeopardy.
2. Serious impairment to bodily function.
3. Serious dysfunction of a bodily organ or part.

"Emergency services" means covered inpatient and outpatient health care services that are furnished by a health care provider who is qualified to provide the services that are needed to evaluate or stabilize an emergency medical condition.

"Enrollee" means an individual, or an eligible dependent, who receives health care benefits coverage through an organized delivery system.

"Essential community providers" means those publicly funded health care providing organizations which the director deems to be vital to a local health care delivery system to ensure that all vulnerable populations in Iowa have assured access to health care.

"Independent review entity" means a reviewer or entity, certified by the commissioner pursuant to Iowa Code section 514J.6 [1999 Iowa Acts, chapter 41, section 12].

"Organized delivery system (ODS)" means an organization with defined governance that is responsible for delivering or arranging to deliver the full range of health care services covered under a standard benefit plan and is accountable to the public for the cost, quality and access of its services and for the effect of its services on their health. The organization operating as an ODS shall assume risk and be subject to solvency standards as found in 201.12(135,75GA,ch158).

"Primary care" means essential, community-based health care services that are coordinated, comprehensive, accountable and accessible on a first contact and on an ongoing basis. Primary care includes diagnosis and treatment, prevention, maintenance, management of chronic problems, and linkages for specialized care.

"Standard benefit plan" means, at a minimum, the same benefit plan that is required of small group insurers under Iowa Code chapter 513B.

"Utilization review" means a program or process by which an evaluation is made of the necessity, appropriateness, and efficiency of the use of health care services, procedures, or facilities given or proposed to be given to an individual within this state. Such evaluation does not apply to requests by an individual or provider for a clarification, guarantee, or statement of an individual's health insurance coverage or benefits provided under a health insurance policy, nor to claims adjudication. Unless it is specifically stated, verification of benefits, preauthorization, or a prospective or concurrent utilization review program or process shall not be construed as a guarantee or statement of insurance coverage or benefits for any individual under a health insurance policy.

641—201.3(135,75GA,ch158) Application. An ODS shall not operate in Iowa without an approved application from the department. An application on forms provided by the department accompanied by a filing fee of $2,000 (a portion of this fee is for the solvency review) payable to the department, shall be completed by an authorized representative of the organized delivery system. The application shall be submitted in duplicate. An application shall not be deemed to be filed until all information necessary to properly process said application has been received by the department; this includes information that addresses rules 201.4(135,75GA,ch158) through 201.15(135,75GA,ch158). The application shall set forth or be accompanied by the following:

1. A copy of the basic organizational document of the applicant such as the articles of incorporation, articles of association, partnership agreement, trust agreement, or other applicable documents and all of its amendments.
2. A copy of the bylaws, rules or similar document, if any, regulating the governance and the conduct of the internal affairs of the applicant.
3. A list of names, addresses and official position of the persons who are to be responsible for the conduct of the affairs of the applicant, including all members of the board of directors, board of trustees, executive committee, or other governing board or committee, the principal officers of a corporation and the partners or members if a partnership or association.
4. A copy of the form of evidence of coverage.
5. A copy of the form of the group contract, if any, which is to be issued to employers, unions, trustees or other organizations.
6. Financial statements showing the applicant's current assets, liabilities and sources of financial support. If the applicant's financial affairs are audited by an independent certified public accountant, a copy of the applicant's most recent regular certified financial statement shall satisfy this requirement unless the department directs that additional financial information is required.
7. A description of the proposed method of marketing the plan, a financial plan which includes a three-year projection of operating results anticipated, and a statement as to the sources of funding.
8. A statement describing the geographic area to be served.
9. A description of the complaint procedures to be utilized.
10. A sample copy of the provider contract for risk-bearing providers.

641—201.4(135,75GA,ch158) Governing body. An organized delivery system shall have a basic written organizational document setting forth its scheme of organization and establishing a governing body appropriate to its form of organization. The governing body shall be responsible for matters of policy and operation.

201.4(1) The ODS shall provide for enrollee representation on the governing body. The organizational document shall describe what this representation shall be and the method the ODS proposes to use to achieve enrollee representation.

201.4(2) Advisory committee. An ODS shall have an enrollee advisory committee to the board. The majority of the members of this advisory committee shall be enrollees with no official capacity within the ODS.

641—201.5(135,75GA,ch158) Service area/geographic access.

201.5(1) An organized delivery system shall establish its own service area subject to approval by the department. The department shall approve only service areas where the county was used as the basic building block.

201.5(2) The ODS's plan of operation shall address the capability of the ODS to serve an enrollee residing anywhere in the service area.

201.5(3) ODSs shall cover emergency care to enrollees who are traveling outside the ODS's service area. The ODS may impose copayments or deductibles for such care to the extent permitted by the enrollee's policy and may require the enrollee to return to the service area for continuing treatment as soon as the enrollee's condition reasonably permits such travel.

201.5(4) An ODS shall provide geographic access to its enrollees within its service area as follows:

a. Primary care shall be available within 30 minutes' travel time.

b. Primary inpatient hospital care shall be available within 60 minutes' travel time. Inpatient hospital services at a secondary or tertiary level may be made available at a referral center exceeding the 60-minute limit and may be located outside the service area.

c. The above requirements do not require that care be provided within the state of Iowa.

201.5(5) A licensed ODS wishing to expand its service area shall seek approval from the department for the expansion. The ODS shall submit evidence that the requirements of subrules 201.5(1) through 201.5(4) can be met for the additional counties.

641—201.6(135,75GA,ch158,78GA,ch41) Provider network and contracts; treatment and services.

201.6(1) Each ODS shall have flexibility in establishing a provider network to achieve the balance of providers which best meets the needs of its enrollees. An ODS may determine its own standards and criteria by which it determines which providers will be included in its network. These standards and criteria shall be public and the ODS shall be held accountable for abiding by the standards and criteria. An ODS shall establish an internal first level provider appeal process.

201.6(2) An ODS shall not use the design of its provider network as a means for discouraging enrollment from high-risk or special needs populations.

201.6(3) Each ODS shall provide data to the department on the utilization of all providers by its enrollees, by provider type. This information shall be disseminated as part of the ODS report card.

201.6(4) A list of available ODS providers, which shall be updated at least once a year, shall be provided to enrollees on request.

201.6(5) An ODS shall be encouraged to establish working relationships with essential community providers. The department shall provide for the identification of essential community providers within the service area of each ODS. The director shall establish criteria for essential community provider designation. The criteria shall focus on:

a. Whether the provider has a demonstrated record of service to impoverished or medically underserved populations which face language, ethnic, or cultural barriers to health care access or which have health care needs that are not being met by other providers in the geographic area; and

b. Whether the provider is an entity who serves all patients regardless of ability to pay and who charges for services on an income-based sliding fee schedule.

201.6(6) Emergency services. Emergency services, as defined in rule 201.2(135,75GA,ch158), shall be provided by the ODS, either through its own facilities or through guaranteed arrangements with other providers, on a 24-hour basis.

a. A physician and sufficient other licensed and ancillary personnel shall be readily available at all times to render such services.

b. Since ODSs are not required to contract with every emergency care provider in an area, ODSs shall make every effort to inform enrollees of participating providers.

c. Reimbursement to a provider of emergency services shall not be denied by any ODS without review of the patient's medical history, presenting symptoms, and admitting or initial as well as final diagnosis, submitted by the provider, in determining whether, by definition, emergency services could reasonably have been expected to be provided.

d. Reimbursement for emergency services shall not be denied solely on the grounds that services were performed by a noncontracted provider. Coverage for emergency services is subject to the terms and conditions of the health plan or contract.

e. If reimbursement for emergency services is denied, the enrollee may file a complaint with the ODS as outlined in rule 201.7(135,75GA,ch158). Upon denial of reimbursement for emergency services, the ODS shall notify the enrollee and the provider that they may register a complaint with the department.

f. Prior authorization for emergency services shall not be required. All services necessary to evaluate and stabilize an emergency medical condition shall be considered covered emergency services.

201.6(7) All provider contracts shall contain the following provisions:

a. (Provider), or its assignee or subcontractor, hereby agrees that in no event, including, but not limited to, nonpayment by the ODS, ODS insolvency or breach of this agreement, shall (provider), or its assignee or subcontractor, bill, charge, collect a deposit from, seek compensation, remuneration or reimbursement from, or have any recourse against subscriber/enrollee or persons other than the ODS acting on their behalf for services provided pursuant to this agreement. This provision shall not prohibit collection of supplemental charges or copayments on an ODS's behalf made in accordance with the terms of (applicable agreement) between an ODS and subscriber/enrollee.

b. (Provider), or its assignee or subcontractor, further agrees that (1) this provision shall survive the termination of this agreement regardless of the cause giving rise to termination and shall be construed to be for the benefit of the ODS subscriber/enrollee and that (2) this provision supersedes any oral or written contrary agreement now existing or hereafter entered into between (provider) and subscriber/enrollee or persons acting on their behalf.

201.6(8) Prohibition of interference with medical communications.

a. An ODS shall not prohibit, penalize, or otherwise restrict a participating provider from advising an enrollee of the ODS about the health status of the enrollee or medical care or treatment of the enrollee's condition or disease, regardless of whether benefits for such care or treatment are provided under the plan, if the provider is acting within the lawful scope of practice.

b. An ODS shall not penalize a provider because the provider, in good faith, reports to state or federal authorities any act or practice by the ODS that, in the opinion of the provider, jeopardizes patient health or welfare.

c. An ODS shall not prohibit, penalize, or otherwise restrict a provider from advocating on behalf of a covered individual within a review or grievance process established by the organized delivery system.

201.6(9) Continuity of care—pregnancy.

a. An ODS that terminates its contract with a participating health care provider shall continue to provide coverage under the contract to a covered person in the second or third trimester of pregnancy for continued care from such health care provider. Such persons may continue to receive such treatment or care through postpartum care related to the child birth and delivery. Payment for covered benefits and benefit levels shall be according to the terms and conditions of the contract.

b. A covered person who makes an involuntary change in health plans may request that the new health plan cover the services of the covered person's physician specialist who is not a participating health care provider under the new health plan, if the covered person is in the second or third trimester of pregnancy. Continuation of such coverage shall continue through postpartum care related to the child birth and delivery. Payment for covered benefits and benefit level shall be according to the terms and conditions of the new health plan contract.

c. An ODS that terminates the contract of a participating health care provider for cause shall not be liable to pay for health care services provided by the health care provider to a covered person following the date of termination.

201.6(10) Continuity of care—terminal illness.

a. If an ODS terminates its contract with a participating health care provider, a covered individual who is undergoing a specified course of treatment for a terminal illness or a related condition, with the recommendation of the covered individual's treating physician licensed under Iowa Code chapter 148, 150, or 150A, may continue to receive coverage for treatment received from the covered individual's

physician for the terminal illness or a related condition, for a period of up to 90 days. Payment for covered benefits and benefit level shall be according to the terms and conditions of the contract.

b. A covered person who makes a change in health plans involuntarily may request that the new health plan cover services of the covered person's treating physician licensed under Iowa Code chapter 148, 150, or 150A, who is not a participating health care provider under the new health plan, if the covered person is undergoing a specified course of treatment for a terminal illness or a related condition. Continuation of such coverage shall continue for up to 90 days. Payment for covered benefits and benefit levels shall be according to the terms and conditions of the contract.

c. Notwithstanding paragraphs *"a"* and *"b"* above, an ODS that terminates the contract of a participating health care provider for cause shall not be required to cover health care services provided by the health care provider to a covered person following the date of termination.

201.6(11) Experimental treatment review. An ODS that limits coverage for experimental medical treatment, drugs, or devices, shall develop and implement a procedure to evaluate experimental medical treatments.

a. A description of the procedure must be submitted to the division of insurance in writing and include, at a minimum:

(1) The process used to determine whether the ODS will provide coverage for new medical technologies and new uses of existing technologies;

(2) A requirement for review of information from appropriate government regulatory agencies and published scientific literature concerning new medical technologies, new uses of existing technologies, and the use of external experts in making decisions; and

(3) A process for a person covered under a plan or contract to request an appeal of a denial of coverage because the proposed treatment is experimental.

b. An evaluation of a particular treatment shall not be required more than once a year.

c. An ODS shall include appropriately licensed or qualified professionals in the evaluation process.

d. An ODS that limits coverage for experimental treatment, drugs, or devices shall clearly disclose such limitations in a contract, policy, or certificate of coverage.

201.6(12) Utilization review requirements. An organized delivery system that provides health benefits to a covered individual residing in this state shall not conduct utilization review, either directly or indirectly, under a contract with a third party who does not meet the requirements established for accreditation by the Utilization Review Accreditation Commission, National Committee on Quality Assurance, or another national accreditation entity recognized and approved by the commissioner. This subrule does not apply to any utilization review performed solely under contract with the federal government for review of patients eligible for services under any of the following:

1. Title XVIII of the federal Social Security Act.
2. The civilian health and medical program of the uniformed services.
3. Any other federal employee health benefit plan.

641—201.7(135,75GA,ch158) Complaints. Each ODS shall provide in its bylaws for a system to resolve and record complaints.

201.7(1) The complaint system shall provide for the resolution of the following kinds of complaints:

a. Complaints about the quality of health care services provided by the ODS.

b. Complaints about the availability of health care services.

c. Complaints relating to enrollee participation in the operation of the ODS.

d. Complaints relating to reimbursement.

201.7(2) An ODS shall submit to the department an annual report in a form prescribed by the department which shall include:

a. A description of the procedures of the complaint system.

b. The total number of complaints handled through the complaint system and a compilation of reasons underlying the complaints filed in accord with 201.7(1).

c. The number, amount and disposition of malpractice claims settled during the year by the ODS and any of its providers.

641—201.8(135,75GA,ch158) Accountability. Accountability measures shall be in place to ensure access and quality of care. Each ODS shall provide information to the department on measures of quality, access, member satisfaction, membership and utilization, finance, and management. The department shall publish annually, by November 1 of each year, the indicators that will be required for the reporting year in a document that shall be shared with all licensed ODSs as well as all applicants. Indicators shall be based upon nationally recognized, documented standards.

201.8(1) *Quality.* The department shall establish indicators to measure the quality of care provided by an ODS.

201.8(2) *Access.* The department shall establish indicators of access to care within an ODS. At least one of the indicators shall be the ratio of primary care providers to enrollees by category of provider.

201.8(3) *Member satisfaction.* The following shall be reported by the ODS to demonstrate member satisfaction.

a. Percent of members indicating overall satisfaction with plan from a member survey.

b. Submission of a copy of the member satisfaction survey used by the ODS.

201.8(4) *Membership and utilization.* Indicators of utilization shall be established by the department for costs, frequency of procedures, inpatient and outpatient services. Indicators of membership shall include the following:

a. Member months stratified by age, gender, residence, and purchaser.

b. Disenrollments by month stratified by age, gender, residence, and purchaser.

201.8(5) *Finance.* Indicators of financial stability and solvency shall be reported according to the standard established in rules 201.12(135,75GA,ch158) and 201.13(135,75GA,ch158).

201.8(6) *Management practices.* Management practices shall be described for the following areas:

a. Credentialing. The ODS shall describe its credentialing process as provided for in 201.6(1).

b. Points of service. The ODS shall provide information on the location of providers, including primary care providers, specialty providers, and hospitals, as provided for in 201.5(4).

c. Quality assessment and improvement activities.

d. Case management.

e. Risk management.

f. Community needs assessments.

g. Relationships with essential community providers.

h. Efforts to address the needs of underserved populations and geographic areas.

641—201.9(135,75GA,ch158) Reporting.

201.9(1) An ODS shall, as part of the application for licensure, submit documentation of ability to comply or plans to achieve compliance with the reporting of the accountability requirements.

201.9(2) Narrative information shall be submitted in report format as specified by the department. Until such time that the data for the calculation of the indicators is available from the Community Health Management Information System (CHMIS), the ODS shall submit the calculated indicator, including documentation of the numerator and denominator used, to the department.

201.9(3) Reports shall be based upon calendar year information. Narrative information shall be submitted within 90 days of the close of the reporting period. Indicator reports shall be submitted within 45 days of the end of each quarter.

201.9(4) The department or its subcontractor shall have the right to validate reports, including record review and site visits. Reasonable costs related to this review shall be the responsibility of the ODS.

641—201.10(135,75GA,ch158) Evaluation. The department shall adopt nationally recognized benchmarks for indicators of quality and access. The department shall seek input and advice from the provider community on the indicators and benchmarks. These benchmarks will include minimum performance standards for identifying ODSs with deficit performance. The department shall establish

criteria for issuing provisional licenses and corrective plans of action. Evaluation criteria shall be published annually with the indicators and shall be based upon established criteria. Utilization, member satisfaction, and management information shall be reported as submitted without established benchmarks.

641—201.11(135,75GA,ch158) Annual report. The department shall publish annually a report comparing all ODSs licensed in the state on all information contained in 201.8(135,75GA,ch158). The report shall also include comparisons by geographic area.

641—201.12(135,75GA,ch158) Finance and solvency. Solvency oversight shall be conducted by the division of insurance under an agreement with the department with examination fees paid as provided for in 201.3(135,75GA,ch158). For purposes of finance and solvency, including investments as detailed in 201.13(135,75GA,ch158), the ODS submits to the jurisdiction of the insurance division.

201.12(1) *Accounting system.* Statutory accounting principles shall apply to ODSs to ensure the accurate and complete reporting of financial information. Any premium or assessment amount that is not paid within three months of the due date shall be assumed uncollectible for financial statement purposes and in considering the amount of assessments and dividends.

201.12(2) *Unencumbered funds.* ODSs shall maintain at all times unencumbered funds that are the greater of:

a. $1 million; or

b. Three times its average monthly claims for third-party providers. Average monthly expenditure is defined as liabilities incurred, including those which are outstanding. In addition to the requirements set forth above, the required unencumbered funds may be increased when, in the insurance commissioner's judgment, it is necessary to do so to protect the enrollees of the ODS.

201.12(3) *Bond requirement.* ODSs shall obtain a surety bond designating the commissioner of insurance as beneficiary in the event of the insolvency of the ODS in the amount and form acceptable to the commissioner of insurance.

201.12(4) *Financially impaired or insolvent ODSs.* The provisions of Iowa Code chapter 507C shall apply to ODSs, which shall be considered insurers for the purposes of chapter 507C. All HMOs and ODSs in the state operating within the service area of the ODS will provide a 30-day open enrollment in the event of insolvency of the ODS with no underwriting or preexisting conditions imposed. The open enrollment plan shall be actuarially equivalent to the standard benefit plan adopted by the small group reinsurance board.

201.12(5) *Examination.* The commissioner of insurance shall make an examination of the affairs of any ODS and its providers as often as the commissioner deems necessary for the protection of the interests of the residents of Iowa, but not less frequently than once every five years. Iowa Code chapter 507 shall be applicable to the examination of ODSs. The expense of such examination shall be assessed against the ODS in the same manner that insurers are assessed for examinations pursuant to chapter 507. ODS providers shall agree to fully cooperate with the insurance commissioner in providing access to books and records necessary for the commissioner to perform the examination process.

201.12(6) *Annual financial statement.* An ODS shall annually, on or before March 1 of each year, file with the commissioner of insurance an annual financial statement, covering the preceding calendar year, in a form prescribed by the commissioner. Such statement shall be verified by at least two of the ODS's principal officers. The ODS shall also file at this time an independent actuarial opinion certifying the adequacy of the ODS unencumbered funds. The commissioner may also request quarterly filings.

641—201.13(135,75GA,ch158) Investment.

201.13(1) All ODS assets, including unencumbered funds referenced in subrule 201.12(2), shall be invested only in securities or other investments as follows:

a. All investments made pursuant to this subrule shall have investment qualities and characteristics such that the speculative elements are not predominant.

b. Financial terms relating to an ODS have the meanings assigned to them under statutory accounting methods.

c. Investments shall be valued in accordance with the valuation procedures established by the National Association of Insurance Commissioners, unless the commissioner requires or finds another method of valuation reasonable under the circumstances.

d. If an investment qualifies under more than one subrule, the ODS may elect to hold the investment under the subrule of its choice.

201.13(2) An ODS's investments shall be held in its own name or the name of its nominee, except as follows:

a. Investments may be held in the name of a clearing corporation or of a custodian bank or in the name of the nominee of either on the following conditions:

(1) The clearing corporation, custodian bank, or nominee must be legally authorized to hold the particular investment for the account of others.

(2) When the investment is evidenced by a certificate and held in the name of a custodian bank or the nominee of a custodian bank, a written agreement shall provide that certificates so deposited shall at all times be kept separate and apart from other deposits with the depository, so that at all times they may be identified as belonging solely to the ODS making the deposit.

(3) If a clearing corporation is to act as depository, the investment may be merged or held in bulk in the name of the clearing corporation or its nominee with other investments deposited with the clearing corporation by any other person, if a written agreement between the clearing corporation and the ODS provides that adequate evidence of the deposit is to be obtained and retained by the ODS or a custodian bank.

b. An ODS may loan stocks or obligations held by it under this rule to a broker-dealer registered under the federal Securities Exchange Act of 1934 or to a member bank. The loan must be evidenced by a written agreement which provides all of the following:

(1) That the loan shall be fully collateralized by cash or obligations issued or guaranteed by the United States or any agency or an instrumentality of the United States and that the collateral shall be adjusted as necessary each business day during the term of the loan to maintain the required collateralization in the event of market value changes in the loaned securities or collateral.

(2) That the loan may be terminated by the ODS at any time and that the borrower shall return the loaned stocks or obligations within five business days after termination.

(3) That the ODS shall have the right to retain the collateral or use the collateral to purchase investments equivalent to the loaned securities if the borrower defaults under the terms of the agreement and that the borrower shall remain liable for any losses and expenses incurred by the association due to default that are not covered by the collateral.

c. An ODS may participate through a member bank in the United States federal reserve book entry system, and the records of the member bank shall at all times show that the investments are held for the ODS or for specific accounts of the ODS.

d. An investment may consist of an individual interest in a pool of obligations or a fractional interest in a single obligation if the certificate of participation or interest or the confirmation of participation or interest in the investment is issued in the name of the ODS, the name of the custodian bank, or the nominee of either, and, if the interest as evidenced by the certificate or confirmation is, if held by a custodian bank, kept separate and apart from the investments of others so that at all times the participation may be identified as belonging solely to the ODS making the investment.

e. Transfers of ownership of investments held as described in subparagraph 201.13(2)*"a"*(3) and paragraphs 201.13(2)*"c"* and *"d"* may be evidenced by bookkeeping entry on the books of the issuer of the investment, its transfer or recording agent, or the clearing corporation without physical delivery of a certificate evidencing the ODS's investment.

201.13(3) Except as provided in paragraph 201.13(2)*"e,"* if an investment is not evidenced by a certificate, adequate evidence of the ODS's investment shall be obtained from the issuer or its transfer or recording agent and retained by the ODS, a custodian bank, or clearing corporation. Adequate evidence,

for purposes of this subrule, means a written receipt or other verification issued by the depository or issuer or a custodian bank which shows that the investment is held for the ODS.

201.13(4) Except as otherwise permitted by this rule, an ODS licensed under this chapter shall only invest in the following:

a. *United States government obligations.* Obligations issued or guaranteed by the United States or an agency or instrumentality of the United States.

b. *Certain development bank obligations.* Obligations issued or guaranteed by the international bank for reconstruction and development, the Asian development bank, the inter-American development bank, the export-import bank, the world bank, or any United States government-sponsored organization of which the United States is a member, if the principal and interest is payable in United States dollars. An ODS shall not invest more than 5 percent of its total admitted assets in the obligations of any one of these banks or organizations and shall not invest more than a total of 10 percent of its total admitted assets in the obligations authorized by this subrule.

c. *State obligations.* Obligations issued or guaranteed by a state, a political subdivision of a state, or an instrumentality of a state.

d. *Canadian government obligations.* Obligations issued or guaranteed by Canada, by an agency or province of Canada, by a political subdivision of such province, or by an instrumentality of any of those provinces or political subdivisions.

e. *Corporate and business trust obligations.* Obligations issued, assumed, or guaranteed by a corporation or business trust organized under the laws of the United States or a state, or the laws of Canada or a province of Canada, provided that a company shall not invest more than 5 percent of its admitted assets in the obligations of any one corporation or business trust. Investments shall be made only in investment grade bonds.

f. *Stocks.* Common stocks, common stock equivalents, mutual fund shares securities convertible into common stocks or common stock equivalents, or preferred stocks issued or guaranteed by a corporation incorporated under the laws of the United States or a state, or the laws of Canada or a province of Canada. Aggregate investments in non-dividend-paying stocks shall not exceed 5 percent of unencumbered funds.

(1) Stocks purchased under this lettered paragraph shall not exceed 50 percent of unencumbered funds. With the approval of the commissioner of insurance, an ODS may invest any amount in common stocks, preferred stocks, or other securities of one or more subsidiaries provided that after such investments the insurer's surplus as regards policyholders will be reasonable in relation to the insurer's outstanding liabilities and adequate to its financial needs.

(2) An ODS shall not invest more than 10 percent of its unencumbered funds in the stocks of any one corporation.

g. *Home office real estate.* Funds may be invested in a home office building, at the direction of the board of directors and with the prior approval of the commissioner of insurance. An ODS shall not invest more than 25 percent of its total admitted assets in such real estate. With the prior approval of the commissioner, an ODS may exceed the real estate investment limitation to effectuate a merger with, or the acquisition of, another ODS.

641—201.14(135,75GA,ch158) Rating practices. An ODS shall use the rate restrictions and regulations applicable to each market segment. All form filings shall include an actuarial certification by a fellow in the society of actuaries (FSA) attesting to the adequacy and fairness of the rates.

641—201.15(135,75GA,ch158) Name. No name other than that certified by the department may be used. The name of an ODS or AHP must clearly identify the entity as an ODS or AHP and all literature published by the ODS or AHP must identify its status as an ODS or AHP.

641—201.16(135,75GA,ch158) Change in organizational documents or control.

201.16(1) Changes to bylaws, articles of incorporation and any other document that would affect the operation and governance of the ODS shall be filed with the department at least 30 days prior to their proposed implementation date.

201.16(2) An ODS which desires to transfer ownership or control of more than 10 percent of ownership interest in the ODS shall not do so without first submitting a proposed plan to the department for review.

641—201.17(135,75GA,ch158) Appeal. A decision by the department to deny an application for licensure as an ODS may be appealed following the procedures in 641—Chapter 173.

641—201.18(135,78GA,ch41) External review. This rule is intended to implement the provisions of 1999 Iowa Acts, chapter 41, to provide a uniform process for enrollees of organized delivery systems to appeal a final adverse coverage decision based on medical necessity. This rule applies to any ODS that issues health plans or policies delivered in the state of Iowa. At the time of a coverage decision, an organized delivery system shall notify the enrollee in writing of the right to have the coverage decision reviewed under the external review process established pursuant to 1999 Iowa Acts, chapter 41, by the division of insurance. The request for an external review shall meet the requirements of the commissioner contained at 191—Chapter 76.

641—201.19 Reserved.

ANTITRUST

641—201.20(135,75GA,ch158) Purpose. The Iowa legislature has determined that the goals of controlling health care costs and improving the quality of and access to health care services will be significantly enhanced by cooperative arrangements involving providers wishing to become an ODS that might be prohibited by state and federal antitrust law if undertaken without governmental involvement. The purpose of the following rules is to institute new public policy by creating an opportunity for the state to review proposed arrangements and to substitute regulation for competition when an arrangement is likely to result in lower costs, or greater access or quality, than would otherwise occur in the marketplace. It is the intent that approval of arrangements be accompanied by appropriate conditions, supervision, and regulation to protect against private abuses of economic power, and that an arrangement approved by the department and accompanied by such appropriate conditions, supervision, and regulation shall not be subject to state and federal antitrust liability. It is the further intent that any immunity from scrutiny under federal or state antitrust statutes offered under these exceptions shall be limited to such specific agreements as are approved by the department, and shall not be extended or applied to unforeseen circumstances, parties, acts, or other agreements which were not part of or contemplated by the approved agreement.

641—201.21(135,75GA,ch158) Definitions.

"Access" means the financial, temporal, and geographic availability of health care to individuals who need it.

"Applicant" means the party or parties to an agreement or business arrangement for which the department's approval is sought under this provision.

"Certificate of public advantage" means the sanction by and protection of the department of public health of an operating arrangement which otherwise might be excepted under certain antitrust regulations.

"Cost" or *"cost of health care"* means the amount paid by consumers or third-party payers for health care services or products.

"Criteria" means the cost, access, and quality of health care.

"Department" means the department of public health.

"Person" means an individual or legal entity.

641—201.22(135,75GA,ch158) Scope.

201.22(1) *Certificate of public advantage.* Providers or purchasers wishing to engage in contracts, business or financial arrangement, or other activities, practices, or arrangements that might be construed to be violations of state or federal antitrust laws but which are in the best interests of the state and further the policies and goals of this provision may apply to the department for a certificate of public advantage.

201.22(2) *Immunity regarding negotiation.* Directors, trustees, or other representatives of a health care provider or third-party payer who participate in discussion or negotiation culminating in any arrangement as described in subrule 201.22(1) are immune from civil actions or criminal prosecution for a violation of state or federal antitrust laws, unless the discussion or negotiation exceeds the scope authorized in this subrule.

201.22(3) *Disputes among the parties.* Any dispute among the parties to an arrangement as described in subrule 201.22(1) concerning the meaning or terms of their agreement is governed by normal principles of contract law.

201.22(4) *Department approval.* Approval by the department is an absolute defense against any action under state and federal antitrust laws, except as provided under subrule 201.30(5).

201.22(5) *Application cannot be used to impose liability.* The department shall ask the attorney general to comment on an application. The application and any information obtained by the department under rules 201.23(135,75GA,ch158) through 201.25(135,75GA,ch158) that is not otherwise available is not admissible in any civil or criminal proceeding brought by the attorney general or any other person based on an antitrust claim, except (*a*) a proceeding brought under subrule 201.30(5), based on an applicant's failure to substantially comply with the terms of the application; or (*b*) a proceeding based on actions taken by the applicant prior to submitting the application, where such actions are admitted to in the application.

201.22(6) *Out-of-state applicant.* Providers or purchasers not physically located in Iowa are eligible to seek a certificate of public advantage for an arrangement in which they transact business in Iowa.

641—201.23(135,75GA,ch158) Application.

201.23(1) *Disclosure.* An application for approval must include, to the extent applicable, disclosure of the following:

a. A descriptive title;

b. A table of contents;

c. Exact names of each party to the application and the address of the principal business office of each party;

d. The name, address, and telephone number of the persons authorized to receive notices and communications with respect to the application;

e. A verified statement by a responsible officer of each party to the application attesting to the accuracy and completeness of the enclosed information;

f. Background information relating to the proposed arrangement, including:

(1) A description of the proposed arrangement, including a list of any services or products that are the subject of the proposed arrangement;

(2) An identification of any tangential services or products associated with the services or products that are the subject of the proposed arrangement;

(3) A description of the geographic territory involved in the proposed arrangement;

(4) If the geographic territory described in subparagraph 201.23(1)*"f"*(3) is different from the territory in which the applicants have engaged in the type of business at issue over the last five years, a description of how and why the geographic territory differs;

(5) Identification of all products or services that a substantial share of consumers would consider substitutes for any service or product that is the subject of the proposed arrangement;

(6) Identification of whether any services or products of the proposed arrangement are currently being offered, capable of being offered, utilized, or capable of being utilized by other providers or purchasers in the geographic territory described in subparagraph 201.23(1)*"f"*(3);

(7) Identification of the steps necessary, under current market and regulatory conditions, for other parties to enter the territory described in subparagraph 201.23(1)*"f"*(3) and compete with the applicant;

(8) A description of the previous history of dealings between the parties to the application;

(9) A detailed explanation of the projected effects, including expected volume, change in price, and increased revenue, of the arrangement on each party's current businesses, both generally as well as the aspects of the business directly involved in the proposed arrangement;

(10) The present market share of the parties to the application and of others affected by the proposed arrangement, and projected market shares after implementation of the proposed arrangement; and

(11) A statement of why the projected levels of cost, access, or quality could not be achieved in the existing market without the proposed arrangement.

g. A detailed explanation of how the transaction will affect cost, access, and quality. The explanation must address the factors in paragraphs 201.26(2)*"b"* to *"d"* to the extent applicable.

201.23(2) *Administrative bulletin notice.* In addition to the disclosures required in subrule 201.23(1), the application must contain a written description of the proposed arrangement for purposes of publication in the Iowa Administrative Bulletin. The notice must include sufficient information to advise the public of the nature of the proposed arrangement and to enable the public to provide meaningful comments concerning the expected results of the arrangement. The notice must also state that any person may provide written comments to the department, with a copy to the applicant, within 20 days of the notice's publication. The department shall approve the notice before publication. If the department determines that the submitted notice does not provide sufficient information, the department may amend the notice before publication and may consult with the applicant in preparing the amended notice. The department shall not publish an amended notice without the applicant's approval.

201.23(3) *Multiple parties to proposed arrangement.* For a proposed arrangement involving multiple parties, one joint application shall be submitted on behalf of all parties to the arrangement.

201.23(4) *Department's authority to refuse to review.*

a. If the department determines that an application is unclear, incomplete, or provides an insufficient basis on which to base a decision, the department may return the application. The applicant may complete or revise the application and resubmit it.

b. If, upon review of the application and upon advice from the attorney general, the department concludes that the proposed arrangement does not present any potential for liability under the state or federal antitrust laws, the department may decline to review the application, and so notify the applicant.

c. The department may decline to review any application relating to arrangements already in effect before the submission of the application. However, the department shall review any application if the review is expressly provided for in a settlement agreement entered into by the applicant and the attorney general before the enactment of these rules.

201.23(5) *Department's authority to extend time limit.* Upon the showing of good cause, the department may extend any of the time limits stated in rules 201.23(135,75GA,ch158) and 201.24(135,75GA,ch158) at the request of the applicant or another person.

641—201.24(135,75GA,ch158) Notice and comment.

201.24(1) *Notice.* The department shall cause the notice described in subrule 201.23(2) to be published in the Iowa Administrative Bulletin and sent to any person who has requested to be placed on a list to receive notice of applications. The department may maintain separate notice lists for different regions of the state. The department may also send a copy of the notice to any person together with a request that the person comment as provided under subrule 201.24(2). Copies of the request must be provided to the applicant.

201.24(2) *Comments.* Within 20 days after the notice is published, any person may mail to the department written comments with respect to the application. Persons submitting comments shall provide a copy of the comments to the applicant. The applicant may mail to the department written responses to any comments within 10 days after the deadline for mailing such comments. The applicant shall send a copy of the response to the person submitting the comment.

641—201.25(135,75GA,ch158) Procedure for review of applications.

201.25(1) *Choice of procedures.* After the conclusion of the period provided in subrule 201.24(2) for the applicant to respond to comments, the department shall select one of the two procedures provided in subrule 201.25(2). In determining which procedure to use, the department shall consider the following criteria:

a. The size of the proposed arrangement, in terms of number of parties and amount of money involved;

b. The complexity of the proposed arrangement;

c. The novelty of the proposed arrangement;

d. The substance and quantity of the comments received; and

e. The presence or absence of any significant gaps in the factual record.

If the applicant demands a contested case hearing no later than the conclusion of the period provided in subrule 201.24(2) for the applicant to respond to comments, the department shall not select a procedure. Instead, the applicant shall be given a contested case proceeding as a matter of right.

201.25(2) *Procedures available.*

a. *Decision on the written record.* The department may issue a decision based on the application, the comments and the applicant's responses to the comments, to the extent each is relevant. In making the decision, the department may consult with the attorney general or the staff of the department and may rely on department data.

b. *Contested case hearing.* The department may order a contested case hearing. A contested case hearing shall be heard before an administrative law judge who shall issue a written recommendation to the department and shall follow the procedures in 641—Chapter 173. All factual issues relevant to a decision must be presented in the contested case. The attorney general may appear as a party. The record in the contested case shall include the application, the comments, the applicant's response to the comments, and any other evidence that is part of the record under 641—Chapter 173.

641—201.26(135,75GA,ch158) Criteria for decision.

201.26(1) The department shall not approve an application unless the department determines that the arrangement is more likely to result in lower costs, increased access, or increased quality of health care, than would otherwise occur under existing market condition or conditions likely to develop without an exemption from state and federal antitrust law. In the event that a proposed arrangement appears likely to improve one or two of the criteria at the expense of another one or two of the criteria, the department shall not approve the application unless the department determines that the proposed arrangement, taken as a whole, is likely to substantially further the purpose of this chapter. In making such a determination, the department may employ a cost/benefit analysis.

201.26(2) Factors.

a. *Generally applicable factors.* In making a determination about cost, access, and quality, the department may consider the following factors, to the extent relevant:

(1) Market structure: actual and potential sellers and buyers, or providers and purchasers; actual and potential consumers; geographic market area; and entry conditions;

(2) Current market condition;

(3) The historical behavior of the market;

(4) Performance of other similar arrangements;

(5) Whether the proposal unnecessarily restrains competition, or restrains competition in ways not reasonably related to the purposes of this chapter; and

(6) The financial condition of the applicant.

b. *Cost.* The department's analysis of cost must focus on the individual consumer of health care. Cost savings to be realized by providers, health carriers, group purchasers, or other participants in the health care system are relevant only to the extent that the savings are likely to be passed on to the consumer. However, where an application is submitted by providers or purchasers who are paid primarily by third-party payers unaffiliated with the applicant, it is sufficient for the applicant to show that cost savings are likely to be passed on to the unaffiliated third-party payers; the applicants do not have the

burden of proving that third-party payers with whom the applicants are not affiliated will pass on cost savings to individuals receiving coverage through the third-party payers. In making determinations as to costs, the department may consider:

(1) The cost savings likely to result to the applicant;

(2) The extent to which the cost savings are likely to be passed on to the consumer and in what form;

(3) The extent to which the proposed arrangement is likely to result in cost-shifting by the applicant onto other payers or purchasers of other products or services;

(4) The extent to which the cost-shifting by the applicant is likely to be followed by other persons in the market;

(5) The current and anticipated supply and demand for any products or services at issue;

(6) The representations and guarantees of the applicant, and their enforceability;

(7) Likely effectiveness of regulation by the department;

(8) Inferences to be drawn from market structure;

(9) The cost of regulation, both for the state and for the applicant; and

(10) Any other factors tending to show that the proposed arrangement is or is not likely to reduce cost.

c. *Access.* In making determinations as to access, the department may consider:

(1) The extent to which the utilization of needed health care services or products by the intended targeted population is likely to increase or decrease. When a proposed arrangement is likely to increase access in one geographic area, by lowering prices or otherwise expanding supply, but limits access in another geographic area by removing service capabilities from that second area, the department shall articulate the criteria employed to balance these effects;

(2) The extent to which the proposed arrangement is likely to make available a new and needed service or product to a certain geographic area; and

(3) The extent to which the proposed arrangement is likely to otherwise make health care services or products more financially or geographically available to persons who need them.

If the department determines that the proposed arrangement is likely to increase access and bases that determination on a projected increase in utilization, the department shall also determine and make a specific finding that the increased utilization does not reflect overutilization.

d. *Quality.* In making determinations as to quality, the department may consider the extent to which the proposed arrangement is likely to:

(1) Decrease morbidity and mortality;

(2) Result in faster convalescence;

(3) Result in fewer hospital days;

(4) Permit providers to attain needed experience or frequency of treatment likely to lead to better outcomes;

(5) Increase patient satisfaction; and

(6) Have any other features likely to improve or reduce the quality of health care.

641—201.27(135,75GA,ch158) Decision.

201.27(1) *Approval or disapproval.* The department shall issue a written decision approving or disapproving the application within 45 days after receipt of the application or, in the case of a contested hearing, within 10 days of receipt of the administrative law judge's recommendation. The department may condition approval on a modification of all or part of the proposed arrangement to eliminate any restriction on competition that is not reasonably related to the goals of reducing cost or improving access or quality. The department may also establish conditions for approval that are reasonably necessary to protect against abuses of private economic power and to ensure that the arrangement is appropriately supervised and regulated by the state.

201.27(2) *Findings of fact.* The department's decision shall make specific findings of fact concerning the cost, access, and quality criteria, and identify one or more of those criteria as the basis for the decision.

201.27(3) *Data for supervision.* A decision approving an application shall require the periodic submission of specific data relating to cost, access, and quality, and to the extent feasible, identify objective standards of cost, access, and quality by which the success of the arrangement will be measured. However, if the department determines that the scope of a particular proposed arrangement is such that the arrangement is certain to have neither a positive nor negative impact on one or two of the criteria, the department's decision need not require the submission of data or establish an objective standard relating to those criteria.

641—201.28(135,75GA,ch158) Appeal. After the department has rendered a decision, the applicant or any other person aggrieved may appeal the decision to the district court within 30 days after receipt of the department's decision. The appeal is governed by Iowa Code chapter 17A. The department's determination, under subrule 201.25(1), of which procedure to use may not be raised as an issue on appeal.

641—201.29(135,75GA,ch158) Supervision after approval.

201.29(1) *Active supervision.* The department shall actively supervise, monitor, and regulate approved arrangements, as described below.

201.29(2) *Procedures.* The department shall review data submitted periodically by the applicant. The department's order shall set forth the time schedule for the submission of data, which shall be at least once a year. The department's order must identify the data that must be submitted, although the department may subsequently require the submission of additional data or alter the time schedule. Upon review of the data submitted, the department shall notify the applicant of whether the arrangement is in compliance with the department's order. If the arrangement is not in compliance with the department's order, the department shall identify those respects in which the arrangement does not conform to the department's order.

An applicant receiving notification that an arrangement is not in compliance has 30 days in which to respond with additional data. The response may include a proposal and a time schedule by which the applicant shall bring the arrangement into compliance with the department's order. If the arrangement is not in compliance and the department and the applicant cannot agree to the terms of bringing the arrangement into compliance, the matter shall be set for a contested case hearing.

The department shall publish notice in the Iowa Administrative Bulletin two years after the date of an order approving an application, and at two-year intervals thereafter, soliciting comments from the public concerning the impact that the arrangement has had on cost, access, and quality. The department may request additional oral and written information from the applicant or from any other source.

641—201.30(135,75GA,ch158) Revocation.

201.30(1) *Conditions.* The department may revoke a certificate of public advantage only if:

a. The arrangement is not in substantial compliance with the terms of the application;

b. The arrangement is not in substantial compliance with the conditions of approval;

c. The arrangement is not in substantial compliance with 641—Chapter 201;

d. The arrangement has not and is not likely to substantially achieve the improvements in cost, access, or quality identified in the approval order as the basis for the department's approval of the arrangement; or

e. The conditions in the marketplace have changed to such an extent that competition would promote reductions in cost and improvements in access and quality better than does the arrangement at issue. In order to revoke on the basis that conditions in the marketplace have changed, the department's order shall identify specific changes in the marketplace and articulate why those changes warrant revocation.

201.30(2) *Notice.* The department shall begin a proceeding to revoke approval by providing written notice to the applicant describing in detail the basis for the proposed revocation. Notice of the proceeding shall be published in the Iowa Administrative Bulletin. The notice shall invite the submission of written

comments to the department, with a copy to the applicant. Comments must be received by the department within 20 days of the publication of the notice.

201.30(3) *Procedure.* A proceeding to revoke an approval shall be conducted as a contested case proceeding upon the written request of the applicant. Contested cases regarding revocations shall be heard by an administrative law judge who shall issue a written recommendation to the department and shall follow the procedures in 641—Chapter 5. Decisions of the department in a proceeding to revoke approval are subject to judicial review under Iowa Code chapter 17A.

201.30(4) *Alternatives to revocation preferred.* In deciding whether to revoke an approval, the department shall take into account the hardship that the revocation may impose on the applicant and any potential disruption of the market as a whole. The department shall not revoke an approval if the arrangement can be modified, restructured, or regulated so as to remedy the problem upon which the revocation proceeding is based. The applicant may submit proposals for alternatives to revocation. Before approving an alternative to revocation that involves modifying or restructuring an arrangement, the department shall publish notice in the Iowa Administrative Bulletin that any person may comment on the proposed modification or restructuring within 20 days after publication of the notice. The department shall not approve the modification or restructuring until the comment period has concluded. An approved, modified, or restructured arrangement shall be subject to appropriate supervision under rule 201.29(135,75GA,ch158).

201.30(5) *Impact of revocation.* An applicant that has had its approval revoked is not required to terminate the arrangement. The applicant cannot be held liable under state or federal antitrust law for acts that occurred while the approval was in effect, except to the extent that the applicant failed to substantially comply with the terms of the approval. The applicant is fully subject to state and federal antitrust law after the revocation becomes effective and may be held liable for acts that occur after the revocation.

These rules are intended to implement 1993 Iowa Acts, chapter 158, section 3.

[Filed emergency 6/17/94—published 7/6/94, effective 6/17/94]
[Filed 9/23/94, Notice 7/6/95—published 10/12/94, effective 11/16/94]
[Filed 3/18/98, Notice 12/31/97—published 4/8/98, effective 5/13/98]
[Filed 11/12/99, Notice 10/6/99—published 12/1/99, effective 1/5/00]

CHAPTER 202
CERTIFICATE OF NEED PROGRAM
[Prior to 7/29/87, Health Department[470] Ch 202]

641—202.1(135) Definitions. For purposes of this chapter, the following definitions apply:

"Acute care category of bed usage," as the term applies in Iowa Code section 135.63(2)*"k,"* shall be the same as the acute care categories listed in the state survey section of the American Hospital Association Annual Survey of Hospitals.

"Any expenditure in excess of five hundred thousand dollars," as defined in Iowa Code section 135.61(18)*"e,"* means new capital expenditures and new personnel necessary to operate the service for a year.

"Any mobile health service with a value in excess of one million five hundred thousand dollars," as defined in Iowa Code section 135.61(18)*"l,"* means the value of all equipment used to provide the service, including the trailer. The party providing the equipment shall be the applicant regardless of the location of that party.

"Appropriate geographic service area," as the term applies to defining affected persons in Iowa Code section 135.61(1)*"c,"* shall be defined as follows:

1. For applications regarding hospitals, hospitals located in the same county and in Iowa counties contiguous to the county wherein the applicant hospital's proposed project will be located.
2. For applications regarding health care facilities, other health care facilities located in the same county and in Iowa counties contiguous to the county wherein the applicant's proposed health care facility will be located.
3. For applications sponsored by other than the hospitals or health care facilities specified in paragraphs "1" and "2," those providers within the same county who offer similar service or might logically be viewed as potential providers of such service.

"Bed capacity" shall be defined as follows:

1. For hospitals, bed capacity is defined as the total facility licensed beds as reported on the state survey section of the American Hospital Association Annual Survey of Hospitals.
2. For health care facilities, bed capacity is defined as a facility's licensed bed capacity according to the department of inspections and appeals.

"Cardiac catheterization service," as the term applies to a new or changed institutional health service in Iowa Code section 135.61(18)*"m"*(1), means the initiation or expansion of this service.

"Consumers served by a new institutional health service" means those consumers residing in the service area as determined by the department.

"Long-term (acute) care hospital," for purposes of these rules, means a hospital that has been approved to participate in the Title XVIII (Medicare) program as a long-term care hospital-prospective payment system hospital (LTCH-PPS) in accordance with 42 CFR Part 412.

"Open heart surgical service," as the term applies to new or changed institutional health service in Iowa Code section 135.61(18)*"m"*(2), means the initiation or expansion of this service.

"Organized outpatient health facility," as defined in Iowa Code section 135.61(20), shall include, but not be limited to, the following types of facilities:

1. Community mental health centers; and
2. Comprehensive outpatient rehabilitation facilities (CORFs) certified by Medicare.

"Organ transplantation service," as the term applies to a new or changed institutional health service in Iowa Code section 135.61(18)*"m"*(3), means the initiation or expansion of this service. Each type of organ transplant shall be considered separately.

"Permanent change in bed capacity of an institutional health facility" means a change which is intended to be effective for one year or more.

1. A conversion of a long-term acute care hospital or a rehabilitation hospital as defined by federal regulations to a general acute care hospital or to a different type of specialty hospital is a permanent change in bed capacity and requires a certificate of need.

2. A hospital which has deleted beds pursuant to Iowa Code section 135.63(2)*"g"* for the purpose of receiving designation as a critical access hospital may reestablish the deleted beds at a later time without obtaining a certificate of need, provided that the number of beds reestablished does not exceed the number of beds maintained prior to the deletion as reported on the bed reduction form.

"Physical facility," as the term applies in Iowa Code section 135.61(18)*"f,"* means a separately licensed facility.

"Private offices and private clinics of an individual physician, dentist, or other practitioner or group of health care providers." The meaning of this term as used in Iowa Code section 135.63(2)*"a"* shall be determined by looking at factors which include, but are not limited to:

1. The type of health care service delivered;
2. The control and supervision of medical judgment in the care of and treatment of patients;
3. The control and supervision of professional assistants, including nurses, physician assistants, and technicians; and
4. The ownership and maintenance of medical records of patients.

"Radiation therapy service applying ionizing radiation for the treatment of malignant disease using megavoltage external beam equipment," as the term applies to new or changed institutional health service in Iowa Code section 135.61(18)*"m"*(4), means the initiation or expansion of this service.

"Rehabilitation hospital," for the purposes of these rules, means a hospital that has been approved to participate in the Title XVIII (Medicare) program as an inpatient rehabilitation facility-prospective payment system hospital (IRF-PPS) in accordance with 42 CFR Part 412.23(b), 412.25 or 412.29.

"Relocation of an institutional health facility," as the term applies to new or changed institutional health service in Iowa Code section 135.61(18)*"b,"* means the replacement of a facility located in one county with a facility located in another county.

"Value in excess of one million five hundred thousand dollars," as used in Iowa Code section 135.61(18)*"g," "h," "i"* and *"j,"* means the value of the equipment including any applicable sales tax, delivery charge and installation charge.

[**ARC 1748C**, IAB 12/10/14, effective 1/14/15]

641—202.2(135) Letter of intent.

202.2(1) Before applying for a certificate of need, the sponsor of a proposed new institutional health service or changed institutional health service shall submit a letter of intent to the department. The letter of intent shall contain the following:

a. A brief description of the proposed project;

b. The project's location;

c. The project's estimated cost (site costs, land improvements, facility costs, movable equipment and financing costs); and

d. An explanation of how the project will be financed.

202.2(2) The letter shall be submitted as soon as possible after the initiation of the applicant's planning process and in any case not less than 30 calendar days before applying for a certificate of need and before substantial expenditures are made. This 30-day waiting period shall begin upon the department's receipt of the applicant's letter of intent.

202.2(3) The department shall make available on the certificate of need Web page located on the department's Web site, www.idph.state.ia.us, all criteria and standards which are pertinent to an application.

202.2(4) A letter of intent received by the department shall be valid for a period of one year from the date of receipt by the department. The sponsor may renew the validity of a letter of intent by providing written notification to the department prior to the one-year expiration date.

[**ARC 1748C**, IAB 12/10/14, effective 1/14/15]

641—202.3(135) Determination of reviewability. A sponsor of a proposed project may submit a written request for a determination of reviewability as to whether the project requires a certificate of need.

202.3(1) The request should include sufficient details of the proposed project and cite the sections of the Iowa Code that the sponsor relies upon to assert the project is not reviewable.

202.3(2) Upon receipt of a written request from the sponsor of a project, the department shall determine if a proposed project requires a certificate of need under Iowa Code sections 135.61 to 135.83. The department may request additional information about the project to make the determination.

a. If it is determined that a certificate of need is required, the sponsor shall be notified by the department and the request for nonreviewability shall be considered the letter of intent for purposes of subrule 202.2(2).

b. If it is determined that a certificate of need is not required, the sponsor shall be notified by the department and the determination of nonreviewability shall be placed on the next agenda of the state health facilities council for consideration.

c. The notification to the sponsor of the results of the department's review of the request shall include specific Iowa Code citations relied upon to support the determination.

[**ARC 1748C**, IAB 12/10/14, effective 1/14/15]

641—202.4(135) Submission of application.

202.4(1) Application form.

a. A sponsor of a proposed project for a new or changed institutional health service shall submit to the department an application for certificate of need by using the appropriate application form found on the certificate of need Web page located on the department's Web site, www.idph.state.ia.us. All information requested in the application form will be required in the absence of a waiver by the department.

b. An original application and six copies thereof shall be sent to the Certificate of Need Program, Iowa Department of Public Health, Lucas State Office Building, Des Moines, Iowa 50319-0075. An electronic copy of the application and all attachments shall also be submitted.

c. The department shall establish and maintain files on each application.

202.4(2) Application fee. The application shall be accompanied by a fee equivalent to three-tenths of 1 percent of the anticipated cost of the project. There shall be a minimum fee of $600 and a maximum fee of $21,000.

a. The fee shall be based on the total cost of the project, which shall include site costs, land improvements, facility costs, movable equipment and financing costs.

b. The fee for leased or donated new institutional health services shall be calculated in the same manner as if the new institutional health services were purchased.

(1) The leased equipment fee shall be based on total value of the lease, plus sales tax, delivery and installation.

(2) The lease of space includes the cost of a one-year-lease payment for the space in addition to other costs associated with the project.

(3) Financing costs shall not be applicable on leases or cash purchases.

c. The fee shall be remitted by check made payable to the Treasurer, State of Iowa, and addressed to Iowa Department of Public Health—Certificate of Need, Lucas State Office Building, Des Moines, Iowa 50319-0075.

d. The application fee will be refunded by the department for any application which is voluntarily withdrawn from the review process in the following amounts:

(1) If an application is voluntarily withdrawn within 30 calendar days after submission, 75 percent of the fee shall be refunded;

(2) If an application is voluntarily withdrawn more than 30 but within 60 calendar days after submission, 50 percent of the fee shall be refunded;

(3) If an application is withdrawn voluntarily more than 60 calendar days after submission, 25 percent of the application fee shall be refunded.

e. The department shall refund the proper amount within 30 calendar days of the applicant's voluntary withdrawal.

f. An applicant for a new or changed institutional health service offered or developed by an intermediate care facility for persons with an intellectual disability or for persons with a mental illness is exempt from payment of the application fee.

g. For purposes of this subrule and Iowa Code section 135.63(1), the term "submission" shall mean the day the application is received by the department.

202.4(3) Determination of completeness.

a. The department shall send written notice to the applicant within 15 business days of receipt of the application if the application has been accepted as complete or otherwise state in said notice what information is needed to make the application complete.

b. An application shall be deemed "accepted" once the department has determined it to be complete and the fees defined in 202.4(2)*"a"* are paid in full.

202.4(4) Promptly after an application is accepted, the department shall provide written notification to all affected persons defined in Iowa Code section 135.61(1)*"c"* and *"d"* which are identified on the department of inspections and appeals Web site or by the applicant, as provided in Iowa Code section 135.66(2). The department shall notify other affected persons by posting such notification to the certificate of need Web page located on the department's Web site, www.idph.state.ia.us. The notice and the Web page shall identify deadlines for the submission of written materials as provided in 202.6(2).

202.4(5) Written analysis of application.

a. The department shall provide a written report evaluating the application against all applicable criteria specified in Iowa Code section 135.64.

b. All reports shall be provided to council members and to the applicant prior to the health facilities' council meeting at which the application is to be heard.

[**ARC 1748C**, IAB 12/10/14, effective 1/14/15]

641—202.5(135) Organizational procedures.

202.5(1) The presence of four members of the council shall constitute a quorum.

202.5(2) The chairperson and all other council members present shall cast votes or abstain, as the case may be, on all council action. No proxy votes shall be allowed.

202.5(3) A vote of a majority of those present shall be necessary to take action on any motion before the council. A tie vote shall mean no action on the motion.

202.5(4) The council shall, at the first meeting after July 1 of each odd-numbered year, elect a vice-chairperson, who shall perform the duties of the chairperson in the absence of the chairperson, when the chairperson has a conflict of interest or when the chairperson so directs.

202.5(5) The department shall notify the public and affected parties of the council meeting agenda utilizing the certificate of need Web page located on the department's Web site, www.idph.state.ia.us.

202.5(6) A council member shall refrain from participating in an application review process if the member:

a. Has a personal bias or prejudice concerning the applicant;

b. Has acted as counsel to the applicant or a competitor of the applicant in the same or adjoining county within the past two years;

c. Has a financial interest in the outcome of the application process or any other significant personal interest that could be substantially affected by the outcome of the case;

d. Has a spouse or relative within the third degree of relationship that (1) is affiliated with or represents the applicant or a competitor of the applicant in the same or adjoining county; (2) has a known financial or significant personal interest which could be substantially affected by the outcome of the application process; or (3) is likely to testify on behalf of the applicant or an affected person at public hearing; or

e. Has any other legally sufficient cause to refrain from participating in the application review process.

[**ARC 1748C**, IAB 12/10/14, effective 1/14/15]

641—202.6(135) Public hearing on application. Public hearings conducted pursuant to Iowa Code section 135.66(3)*"b"* are not contested cases. Judicial review pursuant to Iowa Code section 17A.19 of final agency decisions under Iowa Code section 135.69 shall be treated as other agency action.

202.6(1) The council shall use the following meeting format:

a. Announcement of application under review.

b. Presentation of department report.

c. Applicant presentation.

d. Affected persons' presentation.

e. Applicant's rebuttal.

f. Council discussion, motion and final decision.

202.6(2) The notice of an accepted application issued pursuant to Iowa Code section 135.66(2) shall inform the applicant and affected persons of the deadlines for the submission to the department of written statements or other materials. These deadlines will also be posted on the certificate of need Web page on the department's Web site, www.idph.state.ia.us.

a. Written submissions received by the department after the deadlines established in this notice shall not be considered by the department or the council unless submitted at the public hearing solely to support oral testimony or upon a showing of good cause.

b. Applicants and affected persons shall submit all written materials electronically. If electronic submission is not possible, then an original and six copies must be submitted.

202.6(3) The applicant, affected persons, or their designated representatives shall be given the opportunity to make oral presentations to the council. Other interested persons may be given the opportunity to make oral presentations to the council.

202.6(4) Oral testimony that simply duplicates material received in writing will not be heard. The applicant and affected persons shall present only one witness for each issue raised unless permission is requested and granted by the chairperson.

202.6(5) All questions to an applicant or affected person presenting oral testimony shall be directed from the council or council staff unless permission is requested and granted by the chairperson. Persons making oral presentations to the council are not expected to be placed under oath.

202.6(6) The council may designate technical consultants or experts to assist in its activities as defined by the council.

[**ARC 1748C**, IAB 12/10/14, effective 1/14/15]

641—202.7(135) Summary review. Pursuant to Iowa Code section 135.67, an applicant requesting a summary review shall abide by the following procedures:

202.7(1) If an applicant desires to request a summary review of its application for a certificate of need, it shall submit a written request for summary review, an original application and six copies thereof to the Certificate of Need Program, Iowa Department of Public Health, Lucas State Office Building, Des Moines, Iowa 50319-0075. An electronic copy of the application and all attachments shall also be submitted. The applicant is not required to submit a letter of intent pursuant to Iowa Code section 135.65 prior to submitting a written request for a summary review.

202.7(2) The eligibility of an application for summary review pursuant to Iowa Code section 135.67 shall not mandate or require such review. The department will make the decision as to whether an application will be reviewed in the summary review process.

202.7(3) Upon receipt of a written request for summary review, an application, and the fee required by 202.3(2)*"a,"* the department shall notify the applicant in writing within 15 calendar days if the application is complete and if a summary review will be granted.

202.7(4) If an application is deemed incomplete, the department shall state specifically in writing what information is needed to make the application complete.

202.7(5) If the department notifies the applicant that a summary review will not be performed, this decision is binding on the applicant and the application will be entered into the formal review process on the date of written notice that such application will not be reviewed summarily.

202.7(6) A summary review of an application for a certificate of need shall be completed within 60 calendar days of the acceptance of an application by the department.

202.7(7) At any time during the summary review process, an application may be withdrawn without prejudice from the process. The applicant may then submit the application for a formal 90-day review.
[**ARC 1748C**, IAB 12/10/14, effective 1/14/15]

641—202.8(135) Extension of review time.

202.8(1) A formal review of an application for a certificate of need pursuant to Iowa Code section 135.66 may be extended by the department on the basis of any of the following criteria:

a. In order to review competing applications simultaneously;

b. In the case of technologically innovative equipment, to obtain additional information necessary to evaluate the proposal. The department shall specify in writing such additional information as necessary;

c. At the request of the applicant;

d. At the request of at least two members of the state health facilities council in order to allow additional time for deliberation on all evidence present. The council shall specify the time of the delay and the date on which the final decision will be rendered.

202.8(2) An extension by the department made pursuant to subrule 202.8(1) shall in no case be more than 60 calendar days beyond the time a decision is required under Iowa Code section 135.69 unless the applicant and department agree.

202.8(3) Where none of the provisions of 202.8(1) are applicable and where an application will be automatically denied because of the expiration of time required by Iowa Code section 135.69 for the issuance of a written decision by the council, the department shall notify the applicant of the likelihood of an automatic denial and shall ask the applicant to request in writing an extension of the review time. Where an extension is so requested, the application shall be heard at the next regularly scheduled meeting of the council or at any time agreeable to the applicant and the department.

641—202.9(135) Rehearing of certificate of need decision.

202.9(1) The applicant or any affected person who has participated or sought unsuccessfully to participate in the formal review procedure prescribed in Iowa Code section 135.66 may, for good cause shown, file an application for rehearing in writing with the department stating the specific grounds therefor and the relief sought, within 20 calendar days after the date of the issuance of the final decision on an application for certificate of need.

202.9(2) Grounds for rehearing include, but are not limited to:

a. New significant, relevant information which was unavailable at the date of the hearing;

b. Significant changes in factors or circumstances relied upon by the council in reaching its decision;

c. Demonstration that the council has materially failed to follow its adopted procedures in reaching its decision; or

d. Such other bases as the council determines constitute good cause.

202.9(3) An application for rehearing shall be deemed to have been denied unless the council grants the application in writing within 20 calendar days after its filing.

202.9(4) If the application for rehearing is granted, the council may issue an order modifying the initial final order, or may set the matter for consideration at a subsequent meeting date. If public hearing is granted on the application for rehearing, notice shall be provided ten calendar days prior to hearing to the person applying for rehearing, the applicant and other affected persons upon request pursuant to 202.10(135).

202.9(5) The council shall issue the final decision on rehearing, stating the basis for its decision, within 30 calendar days after the application for rehearing was granted or 30 calendar days after public hearing on rehearing, whichever is later.

202.9(6) If a rehearing is not requested or an affected party remains dissatisfied after the request for rehearing, an appeal may be taken in the manner provided by Iowa Code chapter 17A. A request for rehearing is not required prior to appeal under Iowa Code section 17A.19.

641—202.10(135) Status reports to affected persons. Affected persons are entitled to status reports from the department while a formal application review is in progress pursuant to Iowa Code section 135.68. The department shall maintain a log of all requests for written status reports by affected persons. Affected persons who request written status reports must submit their name and address in a written request (by letter, fax, or E-mail) to the department, identifying the specific information requested, which may include notification of the council's final decision, any application for rehearing, or the filing of a petition for judicial review. The formal process does not preclude informal contacts with department staff for verbal status reports. Copies of the council's final decision, an application for rehearing, a petition for judicial review, or any other public record will be provided upon request and payment of the department's per page fee for copies as described in 641—175.3(7).

641—202.11(135) Finality. The certificate of need application process is continuous beginning with submission of a letter of intent or request for waiver of a letter of intent through issuance of a final decision by the council subject to judicial review under Iowa Code chapter 17A.

202.11(1) The following stages of the process are intermediate and subject to judicial review only to the extent they meet criteria for intermediate review under Iowa Code section 17A.19.

a. A decision by the department pursuant to 641—202.3(135) that a proposed project does not require a certificate of need;

b. A decision by the department to waive submission of the letter of intent and substitute summary review; and

c. The rejection of an application by the department which fails to provide all information required under Iowa Code section 135.63, subsection 1.

202.11(2) The following stages of the process are final decisions subject to judicial review as final agency action under Iowa Code section 17A.19:

a. A decision by the department to disallow summary review;

b. A decision by the council that a proposed project does not require a certificate of need;

c. A decision by the council to approve or deny an application;

d. The council's final ruling on an application for rehearing; and

e. A decision by the council to revoke a certificate of need pursuant to 641—202.13(135).

[**ARC 1748C**, IAB 12/10/14, effective 1/14/15]

641—202.12(135) Project progress reports. The department shall maintain an effective follow-up program to ensure that applicants make timely progress on each approved application.

202.12(1) The sponsor of an approved application shall submit a progress report using the form available on the certificate of need Web page on the department's Web site, www.idph.state.ia.us, to the department six months after approval at hearing.

202.12(2) Progress reports shall fully identify the project and indicate the current status of the project in descriptive terms. The reports shall also reflect an amended project schedule if necessary.

[**ARC 1748C**, IAB 12/10/14, effective 1/14/15]

641—202.13(135) Request for extension of certificate.

202.13(1) A request by the applicant for an extension of a certificate of need must be filed with the department using the form available on the certificate of need Web page on the department's Web site, www.idph.state.ia.us, no later than 30 days prior to the expiration of the certificate of need.

202.13(2) A request for extension shall fully identify the project and indicate the current status of the project in descriptive terms.

202.13(3) Any affected persons shall have the right to submit to the department in writing, or orally at the council meeting at which the extension request is considered, information which may be relevant to the question of granting an extension.

202.13(4) When an extension has been requested, the council shall approve or deny the request at a meeting of the council preceding the expiration of the certification. The certificate of need may be revoked by the council at the end of the certification period for insufficient progress in developing the project.

202.13(5) If the extension is denied, the applicant shall have the right to appeal under the provisions of Iowa Code section 135.70.

[**ARC 1748C**, IAB 12/10/14, effective 1/14/15]

641—202.14(135) Application changes after approval.

202.14(1) Once a project has been approved by the council, no changes that vary from or alter the number of approved beds, the approved services or the approved cost by an amount indicated in 202.14(2) shall be made unless requested by the applicant and approved by the council. Requests shall be made in writing and filed with the department.

202.14(2) An increase in the actual cost of the project over and above that originally approved shall automatically generate a rereview by the council if the increase exceeds the originally approved amount by:

a. Fifteen percent for projects up to $999,999.99;

b. Twelve percent for projects from $1,000,000.00 to $4,999,999.99;

c. Eight percent for projects $5,000,000.00 and over.

An increase in the approved cost that falls below the above percentages shall be reported to the department.

202.14(3) Failure to notify and receive permission of the council to change the project as originally approved may result in the imposition of sanctions provided in Iowa Code section 135.73. The council may make a recommendation to the department regarding the imposition of a sanction and the amount of the fine to be imposed.

641—202.15(135) Sanctions. Hearings to determine class I or class II violations pursuant to Iowa Code section 135.73 shall be conducted in accordance with the department's procedural rules for contested cases found at 641—Chapter 173.

641—202.16(135) Reporting requirements. For the purposes of the annual reports and data compilation required in Iowa Code sections 135.75 and 135.78, the department will utilize the AHA Annual Survey of Hospitals with the state survey addendum for hospitals and the cost reports for health care facilities submitted to the Medicaid enterprise of the department of human services.

[**ARC 1748C**, IAB 12/10/14, effective 1/14/15]

These rules are intended to implement Iowa Code sections 135.61 to 135.79 and 135.83.

[Filed emergency 7/26/78—published 8/23/78, effective 7/26/78]
[Filed emergency 7/25/79—published 8/22/79, effective 7/25/79]
[Filed emergency 11/14/79—published 12/12/79, effective 11/14/79]
[Filed emergency 12/6/79 after Notice 8/8/79—published 12/26/79, effective 12/26/79]
[Filed 2/1/80, Notice 8/8/79—published 2/20/80, effective 3/26/80]
[Filed emergency 5/20/80—published 6/11/80, effective 5/20/80]
[Filed 1/15/82, Notice 12/9/81—published 2/3/82, effective 3/10/82]◊
[Filed emergency 9/14/82—published 9/29/82, effective 9/29/82]◊
[Filed emergency 11/17/82 after Notice 9/29/82—published 12/8/82, effective 12/8/82]
[Filed 5/15/86, Notice 4/9/86—published 6/4/86, effective 7/11/86]
[Filed emergency 7/10/87—published 7/29/87, effective 7/10/87]◊◊
[Filed 9/13/91, Notice 8/7/91—published 10/2/91, effective 11/6/91]
[Filed 9/14/92, Notice 8/5/92—published 9/30/92, effective 11/4/92]
[Filed emergency 7/11/97 after Notice 6/4/97—published 7/30/97, effective 7/11/97]
[Filed 11/16/04, Notice 8/4/04—published 12/8/04, effective 1/12/05]
[Filed 1/13/05, Notice 12/8/04—published 2/2/05, effective 3/9/05]
[Filed 3/11/05, Notice 2/2/05—published 3/30/05, effective 5/4/05]

[Filed ARC 1748C (Notice ARC 1655C, IAB 10/1/14), IAB 12/10/14, effective 1/14/15]

◊ Two or more ARCs

CHAPTER 203
STANDARDS FOR CERTIFICATE OF NEED REVIEW

[Prior to 7/29/87, Health Department[470] Ch 203]

641—203.1(135) Acute care bed need.

203.1(1) *Purpose and scope.*

a. The methodology described in this section provides the basis for estimating the anticipated number of patient-days of acute care hospital service that Iowa citizens will need in the future. The methodology embodies predictive indicators of acute care usage, population and demographic adjustments, and "target" usage rates. The "target" rates express the intent to reduce the levels of acute care usage in areas of the state where that usage is excessive, and not otherwise attributable to the presence of high-usage population groups.

b. The number of acute care beds which will be needed by each of the state's hospitals in the future is a function of the number of patient-days of acute care that will be needed by Iowa citizens, with allowance for the needs of specific population groups and for the travel distance to and location of the state's hospitals.

c. Certificate of need project applications are to be evaluated against the projected bed need determination for those hospitals seeking permission to:

1. Construct new acute care beds;
2. Modernize or renovate acute care beds/patient nursing units;
3. Convert acute care beds from one service use to another;
4. Add to the square footage space of the hospital, where it might be architecturally feasible and cost-effective to convert excess bed space.

d. The methodology responds to the following criteria for evaluation of certificate of need applications:

1. The need of the population for the health services;
2. Availability of alternative, less costly or more effective methods of providing the proposed services;
3. Relationships of the proposed service to the existing health care system of the area;
4. Consideration of the capacity to provide services and consideration of alternatives such as sharing or cooperating arrangements;
5. Other existing facilities providing similar services to those proposed are being used in an appropriate and efficient manner.

203.1(2) *Definitions.*

a. *"Estimated patient-day use rate"* means the number of days of hospital care provided per year, per thousand residents of a county (or the state). The rate is calculated by adding together all of the patient-days per year for residents of a county (or state), obtained from the records of hospitals where those residents received services. The total patient-days is then divided by the number of residents in the county (or the state), and the answer is expressed as "X patient-days per 1,000 persons." A patient-day use rate can be calculated for any specific age group by identifying the number of patient-days of use by residents in that age group and dividing by the number of residents in that age group.

b. *"Target use rate"* for a county means the patient-day use rate that establishes a projected need level for the county at a future point in time. A target use rate can be determined for a specific age group, using the method described above. In this methodology, target use rates will be determined for four age groups: 0-14, 15-44, 45-64, and 65 and older. Therefore, each county will have four target use rates. For each county, the target use rate for each age group shall be the lowest of (1) the estimated patient-day use rate for the county during the survey period or (2) the state average estimated patient-day use rate during the survey period. The rates in effect at the time that an application is declared complete by the state are the rates employed in reviewing that application.

c. *"Patient destination patterns"* means the distribution, by hospital, of the total patient-days of each county. The patterns show where patients were referred for hospital service.

d. *"Patient destination proportion"* means the percentage of a given county's patient-days that occurred in any given hospital.

e. *"Target occupancy rate"* means the desired average annual percent of a given hospital's usable beds that will be occupied. An occupancy rate is determined by dividing a hospital's average daily census (ADC) of patients by the facility's number of usable beds. A "target" occupancy establishes desired levels of efficiency.

f. *"Acute care beds"* means short-stay hospital beds including general medical/surgical, pediatric, obstetric, psychiatric and other short-stay specialized beds.

203.1(3) *Data requirements.*

a. Patient destination patterns, patient destination proportions, and the patient-use of acute care services shall be determined from the most recent statewide patient origin and destination study. Such a study shall be conducted at intervals not to exceed three years and shall be the responsibility of the department of public health. The initial study conducted in 1977 produced target utilization rates. Those target rates produced by subsequent studies shall be reviewed as to their continued appropriateness at the time each three-year study is analyzed. If better data is submitted in the interim between studies such shall be considered in readjusting the target use rates. As revised target use rates are determined by study, the Statewide Health Coordinating Council (SHCC) shall review the new target use rates to determine their appropriateness. All Iowa hospitals shall participate in the survey and shall cooperate with the department in providing the most accurate information available. Out-of-state hospitals will also be surveyed in order to obtain information on Iowa residents receiving hospital care out of the state.

b. Population estimates and projections shall be obtained from the most recent Official Iowa Population Projections, published by the department of economic development. The projecting horizon used in this methodology shall be ten years in the future. Using the year of the most recent patient origin and destination study as "year one," projected patient-day use rates will be applied to the projected populations in "year ten" (example: from the information in the 1977 patient origin and destination study, projections will be made for 1987).

c. Data pertaining to bed capacity and annual patient-days shall be obtained from the most recent Annual Report for Hospital and Related Health Facilities submitted by hospitals to the department of public health.

203.1(4) *Methodology.*

a. Annual "estimated patient-day use rate" by county:

(1) Annually adjust the patient-day information obtained from the one month patient origin and destination study by multiplying the patient-days of each hospital by the ratio of annual patient-days (obtained from the Annual Report) to sample month patient-days (obtained from the patient origin and destination study).

(2) To determine estimated annual county patient-days for each of the age groups (0-14, 15-44, 45-64 and 65 and older) for any given county do the following: first, annually adjust all patient-days identified in the one month survey as described in (1) above; second, for each hospital identify the residence of origin of their annually adjusted patient-days by each specific county; third, for each county identify the annually adjusted patient-days for that county's residents from all of those hospitals which served the residents of the county during the patient origin study period. Follow the same procedure for each age group.

(3) To determine the county patient-day use rate for each age group divide the number of patient-days for that age group (identified in (2) above) by the population of the county in that age group. Express the results as "X number of patient-days per 1,000 residents in Y age group."

b. Annual "estimated patient-day use rate" by state. For each age group add together the estimated annual county patient-day for that age group in all counties and divide by the state population in that age group.

c. To determine target use rates—each county will have four target use rates; one for each of the age groups 0-14, 15-44, 45-64, and 65 and older. The target use rate for any age group for a county will be the lowest of:

(1) Estimated annual patient-day use rate for the age group in that county;

(2) Estimated annual patient-day use rate for the age group in the state.

d. To determine projected patient-days for a county—multiply the target rate for each age group by the projected county population in that age group for the year ten years after the most recent patient origin survey (counting the survey year as "year one").

e. To determine facility projected patient-days—for each of the four age groups divide up the projected patient-days for each county among the hospitals that served the county during the patient origin study period. The distribution of any county's projected patient-days (in each age group) will be made in accordance with the percentage distribution of patient-days (in each age group) among the various hospitals in the study period. The percentage distribution number for any given hospital of the patient-days of any given county is called the "patient destination proportion." Add together all of the projected patient-days in each of the four age groups going to each hospital from all of the counties served by that hospital.

f. To determine a facility's projected patient-days for out-of-state residents—first, determine the in-state and out-of-state percentage of patient-days identified for each facility during the patient origin survey period; next divide a given facility's in-state percentage into its number of projected patient-days in the patient origin survey. The projected patient-days for facility A from Iowa counties is 2,000. To expand the patient-days to allow for the anticipated out-of-state patients divide 2,000 by .90 to get 2,222. (Ninety percent of 2,222 would be 2,000 and 222 would allow for the 10 percent out-of-state patients expected to use the hospital in the future projection.)

g. To determine facility projected bed need—divide the projected patient-days for the facility by 365 days to estimate the projected average daily census of patients. The average daily census for the facility will determine the facility's projected bed need when allowance is made for a margin of unoccupied beds. The margin of unoccupied beds provides for the fluctuations in average-to-peak service periods. The smaller hospitals have a greater margin allowed in order to accommodate the necessary emergency and primary care functions that account for the majority of their patients. The following scale incorporates the margin and provides the link between the projected average daily census for a facility and the projected bed need.

If Average Daily Census (ADC) is:		Presumed Occupancy Rate:
1-30	BN = 1.670 × ADC	60%
31-70	BN = 50 + 1.250 × (ADC – 30)	61-70%
71-160	BN = 100 + 1.111 × (ADC – 70)	71-80%
161-249	BN = 200 + 1.124 × (ADC – 60)	81-83%
250 or more	BN = 1.205 × ADC	83%

Specific exception—University of Iowa Hospitals and Clinics serve a unique role as a nearly exclusively tertiary facility with many specialized units. Its occupancy rate should allow for greater peak load fluctuation and therefore will have an occupancy rate of 80%.

203.1(5) *Contingencies.*

a. Patient-days for hospitals that close in the interim between revisions of the patient origin and destination study will be divided among other hospitals serving the same counties as the hospital that closed. The projected patient-days will be divided according to the percentage of the county's patient-days going to each of the other hospitals serving that county. (Example: County A has a projected 1,000 patient-days divided among three hospitals—

Facility X = 60% of the patient-days = 600 patient-days

Facility Y = 20% of the patient-days = 200 patient-days

Facility Z = 20% of the patient-days = 200 patient-days

If Facility Z closes, the 200 patient-days would be distributed to Facilities X and Y according to the following ratios:

Facility X = 600/800	600/800 × 200 = 150 patient-days
Facility Y = 200/800	200/800 × 200 = 50 patient-days

Facilities X and Y will then have projected patient-days of 750 and 250 respectively.)

b. Joint planning in multiple-hospital communities is encouraged and any alternative distribution plan for the aggregate community bed need in those communities may be presented by the hospitals affected. So long as the total community bed need does not exceed the sum of the individual facility needs for the community and so long as all of the hospitals in the community agree to the alternative distribution plan, the plan will replace the distribution pattern determined by this methodology.

641—203.2(135) Cardiac catheterization and cardiovascular surgery standards.

203.2(1) *Purpose and scope.*

a. These standards are measures of some of those criteria found in Iowa Code sections 135.64(1)*"a"* to *"q,"* and 135.64(3). Criteria which are measured by a standard are cited in parentheses following each standard.

b. Certificate of need applications which are to be evaluated against these cardiac catheterization and cardiovascular surgery standards include:

(1) Proposals to commence or expand capacity to perform cardiac catheterization.

(2) Proposals to add new or replace cardiovascular surgery services.

(3) Any other applications which relate to cardiac catheterization or cardiovascular surgery.

203.2(2) *Definitions.*

a. Adult cardiac catheterization laboratory—a diagnostic facility exclusively for intracardiac or coronary artery catheterization on adults.

b. Pediatric cardiac catheterization laboratory—the same as adult cardiac catheterization laboratory, except exclusively for children and infants.

c. Cardiac catheterization—

(1) Intracardiac—a diagnostic study of the heart, and pulmonary arteries, or both, in which a small catheter passes through a vein or artery in the neck, leg or arm and advances into the great vessels, the heart or the pulmonary arteries. Through this procedure one can measure pressure within the heart and in adjacent veins and arteries, collect blood samples for blood gas analysis and inject radiopaque material, visualize cardiac and vessel anatomy. The procedure permits detection of congenital and acquired heart abnormalities, the study of ventricular function, the estimation of the orifice size, the placement of pacemakers, etc. Cardiac catheterization is incomplete without cineangiography, intracardiac pressure measurements, blood gas analysis and the ability to diagnose intracardiac shunts.

(2) Coronary artery catheterization—a diagnostic study of the coronary arteries, in which a small catheter passes through an artery in the leg, neck or arm into a coronary artery orifice. Intravascular pressure measurements are taken, and angiography of the coronary arteries is performed. Catheterization and cineangiocardiography of the left ventricle are an integral part of this procedure.

d. Angiography.

The photographic recording of X-ray or radiologic images of blood vessels, in any part of the body—the heart, the head, the great vessels, the kidney, etc. In the procedure blood vessels are injected with a radiopaque chemical. Immediately following injection, X-rays are employed to image the path of the injected chemical. These X-ray images are then photographically recorded.

Angiocardiography.

The recording of moving X-ray images (fluoroscopic images) of the heart and great vessels. After injection of radiopaque chemicals, moving X-rays of the chemical's flow are projected on a screen called a fluoroscope. Moving pictures (cineangiocardiography) or still pictures in sequence (serialography) may be recorded of the X-ray image.

e. Adult cardiovascular surgery—cardiovascular surgery exclusively for adults.

f. Pediatric cardiovascular surgery—cardiovascular surgery exclusively for infants and children.

g. Cardiovascular surgery—the services associated with and surgery performed for congenital or acquired diseases of the heart, great vessels, or pericardium, including the placement of travenous and epicardial pacemakers.

(1) Open heart surgery—cardiovascular surgery in which an incision of sufficient size is made to allow direct vision of the area. Open heart surgery requires temporary use of a heart-lung (cardiopulmonary bypass) machine, as blood flow through the heart is greatly reduced or stopped altogether.

(2) Coronary artery surgery—surgery to correct inadequate blood flow to the heart through using revascularization techniques to bypass significantly obstructed coronary artery lesions.

h. Closed heart surgery—cardiovascular surgery in which a small incision and repairs are made without direct vision of the area.

203.2(3) *Availability of services.*

a. Minimum utilization—cardiovascular surgery (Iowa Code sections 135.64(1)*"c," "g," "h"*).

(1) Adult cardiovascular surgical programs should project an annual minimum rate of over 200, or no approval shall be granted. Higher case loads over 200 per annum, are encouraged.

(2) Pediatric cardiovascular surgical units should project a minimum of 100 pediatric heart operations after the first year, at least 75 of which must be open heart procedures.

(3) Combined adult/pediatric cardiovascular surgery units should project the minimum projected annual rates for both adult and pediatric surgery, or no approval shall be granted.

(4) Applicants should project utilization of cardiovascular surgery, catheterization and cardiac care units based upon service area population demographics, current regional or national utilization rates of the service, disease incidence and prevalence rates, current cardiac care treatment modes, and in consideration those adult cardiovascular surgery units currently operating in Iowa, and bordering states within two hours surface travel time, if the applicant proposes an adult unit; and in consideration of pediatric cardiovascular surgery units currently operating in Iowa and bordering states within three hours surface travel time, if the applicant's proposed unit is pediatric. If a combined unit is proposed both the two- and three-hour considerations for existing adult and pediatric units apply. The assumptions, data and methodology used to arrive at projections shall be provided in each application.

b. Expansions—cardiovascular surgery (sections 135.64(1)*"c," "d," "e," "g," "h"*).

(1) There should be no additional adult cardiovascular surgery units initiated unless each existing unit within two hours surface travel time is operating at a minimum of 350 open heart surgery cases per year.

(2) There should be no additional pediatric cardiovascular surgery units initiated, unless each existing unit within three hours surface travel time is operating at 130 surgeries per year. (If one team serves more than one institution the numbers for those institutions should be combined.)

(3) No additional cardiovascular surgery units should be approved which will reduce the volume of existing services below 350 procedures annually for adults and 130 annually, 75 of which are open heart, for pediatric units. The applicant will demonstrate that an attempt was made to determine with the cooperation of existing providers whether such a reduction would occur. Existing providers of consequence are within two hours surface travel time for adult services and within three for pediatric services.

(4) Adult cardiovascular surgical service units should be granted only to institutions which can demonstrate an unserved population base of 500,000 persons. An unserved area is one which lies outside of an existing unit's service area.

(5) Pediatric cardiovascular surgical services should be granted unto institutions which can demonstrate an unserved population base of 2.5 million with 30,000 live births per year.

c. Minimum utilization—cardiac catheterization (sections 135.64(1)*"c," "d," "g," "h"*).

(1) Adult cardiac catheterization laboratories should be projected to operate at a minimum of 300 catheterizations per annum.

(2) Pediatric catheterization laboratory units should project a minimum of 150 catheterizations annually.

(3) Combined units should meet each of the adult and pediatric standards.

(4) Applicant should project utilization of cardiac catheterization units based upon service area population demographics, current regional or national utilization rates of the service, disease incidence and prevalence rates, current cardiac care treatment modes, and in consideration those adult cardiovascular surgery units currently operating in Iowa, and bordering states within two hours surface travel time if the proposed unit is for adults; and in consideration of pediatric cardiovascular surgery units currently operating in Iowa, and bordering states within three hours surface travel time if the proposed unit is for children. If a combined unit is proposed both time considerations shall apply. The assumptions, data and methodology used to arrive at projections shall be provided in the application.

d. Expansions—cardiac catheterizations (sections 135.64(1)*"c," "d," "e," "g," "h"*).

(1) There should be no additional adult cardiac catheterization unit opened unless the number of studies per year in each existing unit within two hours surface travel time is greater than 500. No additional pediatric unit should be opened unless the number of studies per year in each existing unit within three hours surface travel time is greater than 250.

(2) There should be no additional cardiac catheterization units initiated which would reduce the volume of existing units below 500 adult catheterizations, 200 of which are intracardiac or coronary artery catheterizations, or 150 pediatric catheterizations, or both for combined units. The applicant must attempt and demonstrate that an attempt was made to determine with the cooperation of existing providers whether such a reduction would occur. Existing providers of consequence are those within two hours surface travel time for adults or three hours for pediatrics.

e. There should be no new cardiac catheterization unit open in any facility not performing open heart surgery (sections 135.64(1)*"e," "g," "h," "k"*).

203.2(4) *Costs.*

a. *Financial feasibility.* (Sections 135.64(1)*"f," "i," "p"*) Cardiovascular surgery and catheterization equipment, and associated remodeling or construction should be depreciated over a period consistent with American Hospital Association schedules as limited by existing reimbursement payors.

b. *Cost-effectiveness.* Proposed new or replacement cardiac catheterization laboratories cost per catheterization and cardiovascular surgery services estimated costs per surgery should when compared to their peers demonstrate cost-effectiveness.

203.2(5) *Accessibility.* (Sections 135.64(1)*"c," "d"*)

a. Cardiovascular surgery units and cardiac catheterization labs should be available 24 hours a day, seven days a week for emergency coverage.

b. Facilities with cardiovascular surgery/cardiac catheterization should have available 24-hour, seven days a week ambulance and emergency room service.

c. Travel distance should be within two hours surface travel time or less for 80 percent of the projected service area for pediatric services.

d. Cardiac catheterization and cardiovascular surgery service should be provided regardless of ability to pay, in consideration of those programs available in the state which serve the medically indigent.

203.2(6) *Quality.* (Sections 135.64(1)*"i," "k"*)

a. Each surgery unit and cardiac catheterization lab shall demonstrate a reasonable set of criteria that are used in selecting appropriate candidates for surgery and catheterization.

b. Staffing minimums.

(1) The open heart surgery team should minimally consist of:

1. At least two certified or board eligible cardiovascular surgeons for the first 75 to 130 pediatric open heart surgeries. If pediatric surgery is performed, one surgeon must have special training and experience in surgery for congenital cardiac defects.

2. A board certified or board eligible adult or pediatric cardiologist(s). The latter only if pediatric surgery is performed, the former only if adult surgery is performed.

3. Board certified or board eligible anesthesiologist with special training in the management of cardiovascular cases' respiratory care.

4. Radiologist trained in the cardiovascular field.

5. Pathologist familiar with cardiac problems.

6. Specially trained in heart disease surgical nursing staff.
7. Cardiopulmonary bypass pump technicians.
8. Other ancillary staff as needed.

(2) Each applicant shall document that the proposed surgery unit can be so staffed when completed and operational.

c. Equipment and facilities. The applicant seeking to provide cardiovascular surgery should demonstrate that the following support services will be available:

(1) General X-ray diagnostic facilities and facilities for emergency X-rays on a 24-hour basis.

(2) A cardiac catheterization laboratory or angiography lab available on a 24-hour basis.

(3) A cardiographics laboratory, with facilities for recording the following tests: EKG, vector cardiogram, phonocardiogram, echocardiogram, and exercise stress testing.

(4) A supporting blood bank and hematology laboratory.

(5) A microbiology laboratory.

d. Cardiac catheterization labs serving infants and children should have biplane angiographic equipment, either cineangiocardiographic or cut film. Pediatric cardiac catheterization labs should be supervised by board certified or board eligible pediatric cardiologists; adult cardiac catheterization labs should be supervised by a board certified or board eligible adult cardiologist.

203.2(7) *Continuity.* (Sections 135.64(1)*"g," "h," "i," "k"*)

a. The applicant should demonstrate that an attempt was made to solicit letters and to establish referral agreements from area hospitals and physicians to indicate a willingness to participate in a cooperative endeavor to refer to the proposed service.

b. The applicant should provide documentation that emergency medical transport services will be available.

c. Institutions providing cardiovascular surgery services should include mechanisms for comprehensive medical followup including adequate medical records exchange.

203.2(8) *Acceptability.* (Section 135.64(1)*"c"*) Facilities with cardiovascular surgery and cardiac catheterization indicate a willingness to observe and respect the rights of patients as stated in the Patients Bill of Rights adopted by the American Hospital Association February 6, 1973, and reprinted in 1975.

641—203.3(135) Radiation therapy or radiotherapy standards.

203.3(1) *Purpose and scope.*

a. These standards are measures of some of those criteria 1 (a to q) and 3 found in Iowa Code section 135.64. Criteria which are measured by a standard are cited in parentheses following each standard.

b. Certificate of need applications which are to be evaluated against these radiation therapy standards include:

(1) Proposals to commence or expand the kind or capacity of megavoltage radiation therapy services.

(2) Proposals to replace a radiation therapy unit.

(3) Any other applications which relate to radiation therapy.

203.3(2) *Definitions.*

a. *Radiation modality.* The method of applying ionizing radiation in the treatment of patients with malignant disease. Externally applied modes.

Superficial X-ray therapy. The use of a conventional X-ray machine, which generates X-rays of up to 150 kilovolts (150 kv), to treat superficial lesions, such as skin cancer.

Orthovoltage X-ray therapy. The use of a conventional X-ray machine which generates X-rays between 150 kv up to and including 800 kvs. (These X-rays are of insufficient energy to avoid preferential bone absorption or to be "skin sparing".)

Megavoltage therapy. The use of ionizing radiation in excess of one million electron volts. Energies above one million electron volts cause considerably less skin damage, increase depth dose markedly, and result in much less scatter from the therapeutic beam. Megavoltage machines are classified as follows:

1. Particle accelerators. These machines use a supply of electrons, which are accelerated into high energy beams. These beams are either caused to strike a target resulting in high energy X-ray production, or are used themselves as the treatment beam. Particle accelerators generate from 4 million up to as many as 45 million electron volts. Most common particle accelerators are the linear accelerator and the betatron.

2. Isotope sources (gamma ray teletherapy units).

Cobalt 60 units—emit gamma rays of approximately 1.2 million electron volts.

Cesium teletherapy units—utilize gamma rays of approximately 650 kv.

b. Megavoltage therapy unit. A piece of megavoltage therapeutic radiologic equipment.

c. Radiation therapy facility. A piece of megavoltage therapeutic radiologic equipment, the accompanying support equipment, and the physical space which houses the equipment.

d. Treatment (procedure). All those radiation fields applied in a single patient visit. Interstitial/intracavitary treatment counts as one visit.

e. Dosimetrist. A technologist who calculates, verifies, and develops maps for the dose distribution of radiation within the patient. The technologist is an essential member of the treatment planning team.

f. Radiation therapist (radiation oncologist). A physician who is board certified or board eligible in therapeutic radiology or in general radiology and who devotes full time to the practice of radiation therapy.

g. Radiation therapy technologist. An individual registered or eligible for registration by the American Board of Radiologic Technologists, or its equivalent, in radiation therapy.

h. Transverse tomograms. A special diagnostic X-ray procedure to determine the depth of the tumors inside the body.

i. Conjoint radiation oncology center (cancer center). A multi-institution, multidisciplinary network to provide radiation therapy for cancer patients. Each institution has an equal voice in decision making and direction of the work of the center. Integration of patient care management, common utilization of personnel and equipment, and a single system of records between center institutions assures optimal care regardless of entry portal. A common cancer registry of all patients treated by center hospitals is maintained.

j. Simulator. Used to reproduce the geometry of the external beam treatment technique, and consists of an isocentrically mounted X-ray source with X-rays passing per a collimation system to reproduce the therapy beam.

k. New patient. A patient receiving treatment for the first time at a given radiation therapy facility.

203.3(3) *Availability.*

a. Minimum utilization. (Sections 135.64(1)*"c," "g," "h*")

(1) A megavoltage radiation therapy unit which is of relatively low energy, including small linear accelerators (4-10 MEVs), cobalt units and cesium teletherapy units, should serve a population of at least 200,000 persons, and treat at least 300 new patients annually within three years after initiation of the service.

(2) A megavoltage radiation therapy unit which is of medium energy, including linear accelerators of 12-20 MEVs should only be placed in facilities which are currently treating with megavoltage radiation therapy a minimum of 500 new patients annually.

(3) A megavoltage radiation therapy unit which is of high energy, including those linear accelerators of greater than 20 MEVs, should only be placed in facilities which are currently treating at least 750 new patients annually with megavoltage radiation therapy.

(4) To determine the number of new patients needing megavoltage radiation therapy annually in a service area, the following formula shall be applied:

Multiply the service area population times .00304 (3.04/1,000 population was the mean cancer incidence rate in 1976 in Iowa as filed by the Surveillance, Epidemiology, and End Results Program—SEER). A service area population is determined by each facility's catchment area as reported in the most recent patient origin study of the Iowa department of public health.

Multiply this product times .5 (50 percent of all new cancer patients require radiation therapy).

(5) Institutions which form a conjoint oncology center should have at least 500 new patients annually who are amenable to megavoltage therapy.

b. *Expansions.* (Sections 135.64(1)*"c," "d," "e," "g," "h"*)

(1) There should be no additional megavoltage units of comparable size approved unless each existing megavoltage unit of that size within 90 minutes travel time of the proposed unit is performing at least 6,000 treatments per annum.

(2) Proposed new small megavoltage units within 90 minutes travel time of other small units must identify an unserved population base of 200,000 apart from that 200,000 currently served by institutions in the service area.

(3) Megavoltage treatments per annum should be projected by multiplying the number of projected new patients needing megavoltage therapy times 20.

(4) There should be no additional megavoltage radiation therapy units of comparable size within 90 minutes surface travel time of existing units which would reduce the projected volume of treatments per annum in existing units of comparable size to less than 6,000 treatments per annum and which would result in less than 300 projected new patients per annum for that existing unit. The applicant will attempt and demonstrate that an attempt was made to determine with the cooperation of existing providers whether such a reduction would occur.

(5) New conjoint centers should be justified if more than 3,000 new patients are currently being treated by radiation therapy in an existing center.

c. A simulator which can accurately reproduce the geometry of each external beam technique should be available for every two megavoltage units in a radiation oncology department.

203.3(4) *Costs.*

a. *Financial feasibility.* (Sections 135.64(1)*"f," "i," "p"*)

(1) Megavoltage radiation therapy units should be depreciated over a period no shorter than that indicated by "Estimated Useful Lives of Depreciable Hospital Assets" published by the American Hospital Association. Associated remodeling should be depreciated according to generally accepted accounting principles and over a period no shorter than indicated in the above-named publication.

(2) Recognizing anticipated volume rate structure, and third party reimbursement, the applicant should present a breakeven analysis for the service. If the analysis shows breakeven will fail to occur after three years of the service's initiation, the applicant should demonstrate why operating a service with the revenues below costs appears desirable.

(3) Charges will be based on actual or projected yearly treatments, but not less than 6,000 treatments.

b. *Cost-effectiveness.* (Section 135.64(1)*"e"*) Costs per unit of service should not exceed 10 percent of the state average unit cost for the service. If costs exceed 10 percent of that average the applicant shall demonstrate how the proposal represents the most cost-effective way to deliver the service and explain why the project was chosen instead of alternative ways of meeting the need for the service.

203.3(5) *Accessibility.* (Sections 135.64(1)*"c," "d"*)

a. Travel distance shall be within 90 minutes auto travel time for the projected service area population.

b. Radiation therapy services should be provided regardless of ability to pay, in consideration of those programs available in the state which serve the medically indigent.

203.3(6) *Quality.* (Sections 135.64(1)*"i," "k"*)

a. Minimum staffing requirements for radiation therapy facilities:

(1) Each facility shall have the services of radiation therapists which should be staffed at a level of one therapist per 400 new cancer patients needing treatment.

(2) Each facility shall have the services of radiation physicists which should be staffed at a level of one physicist per 800 new patients.

(3) Each facility shall have the services of radiation therapy technologists which should be staffed at a level of two technologists per megavoltage unit.

(4) Each facility should have the services of nurses.

(5) Each facility should have the services of dosimetrists which should be staffed at a level of one dosimetrist per 500 new patients.

b. Reserved.

c. Each conjoint center shall have at least two cancer biologists available.

d. Each conjoint center shall have one radiation technologist available for each simulator.

e. Replacement or development of orthovoltage treatment should not occur.

f. The long-range plans for radiation therapy services shall be submitted to the Iowa department of public health.

g. Multidisciplinary tumor boards should be established in all institutions housing megavoltage or orthovoltage machines.

h. A source of continuing education should exist within each conjoint center to reach participating community referral hospitals and physicians.

i. Each conjoint center should have a unified training program in radiation therapy for radiation therapists.

j. Each radiation therapy facility should offer psychosocial counseling services and nutritional counseling.

203.3(7) *Continuity.* (Sections 135.64(1)*"g," "h," "i," "k"*)

a. The applicant should demonstrate that an attempt was made to solicit letters and establish referral agreements from area hospitals and physicians to indicate their willingness to participate in a cooperative endeavor to refer to the proposed service.

b. A minimum of 75 percent of all radiation therapy procedures should be projected to be done on an outpatient basis. If the applicant believes that 75 percent is inappropriate for its facility, then documentation which shows how its facility is different and why it sufficiently justifies not meeting this 75 percent outpatient rate, shall be provided.

203.3(8) *Acceptability.* (Section 135.64(1)*"c"*) Facilities with radiation therapy services shall document a willingness to observe and respect the rights of patients as stated in the "Patients Bill of Rights" adopted by the American Hospital Association February 6, 1973, and reprinted in 1975. Provisions for counseling services shall be available.

641—203.4(135) Computerized tomography standards.

203.4(1) *Purpose and scope.*

a. These standards are measures of some of those criteria in Iowa Code sections 135.64(1)*"a"* to *"l."* Criteria which are measured by a standard are cited in parentheses following each standard.

b. Certificate of need applications which are to be evaluated against these computerized tomography standards include:

(1) Proposals to commence or expand the capacity of computerized tomography services.

(2) Any other applications which relate to computerized tomography services.

203.4(2) *Definitions.*

a. Computerized tomographic (CT) scanner—a diagnostic tool which rotates about and which sends X-ray beams through cross-sectional layers of the body or brain. The X-ray beams which emerge from the body or brain are absorbed by a detector. Differences in the amount of X-rays absorbed by the detector indicate differences in tissue density. As the scanner rotates it takes many images of a cross-section. The images on the detector are transmitted to a computer which displays on a TV a reconstructed cross-sectional picture or slice. Contrast media is then usually injected to alter absorption of the detector, and the scan repeated; this is called enhancement.

(1) Whole body scanner—one capable of imaging the entire body.

(2) Head scanner—one capable of imaging only the brain and structures adjacent to the head.

b. Enhanced scan—a scan performed on a patient who has been treated with a contrast medium so that specific organs or areas of the body will be displayed more distinctly on the scan image.

c. Arteriography—imaging of blood vessels supplying the area of interest following injection of contrast media.

d. Pneumoencephalogram—the X-ray imaging of the skull and its content after introducing air or gas into the fluid-filled spaces within and around the brain and spinal cord.

e. Radioisotope brain scan—nuclear imaging of the concentration of radioactive isotopes which have been injected by biochemical or physiological actions into the brain, referred to later as nuclear brain scan.

f. H.E.C.T. (head equivalent C.T. unit)—a unit by which to measure the capacity of a CT scanner, and being defined as the average number of minutes necessary to perform a single unenhanced CT head study on a body scanner (including the room and equipment preparation time).

By comparing the average times for performing various types of scan procedures to the time necessary to perform an unenhanced head scan, the following table of equivalencies was determined:

On a head scanner—

One unenhanced head scan = 1.05 HECTs
One enhanced head scan = 1.26 HECTs
A procedure involving both types of scans = 1.85 HECTs

On a body scanner—

One unenhanced head scan = 1.00 HECTs
One enhanced head scan = 1.16 HECTs
A procedure involving both types of scans = 1.74 HECTs
One unenhanced body scan = 1.48 HECTs
One enhanced body scan = 2.00 HECTs
A procedure involving both types of scans = 2.75 HECTs

g. Operational capacity for a CT scanner—the operational capacity of a scanner is 3000 HECTs per year, plus or minus 10 percent.

h. Minimum shared-market area for a scanner (hereafter referred to as "area")—the smallest geographic area within which any scanner installation is judged to affect the utilization rate of any other scanner is the community (as defined by the U.S. Bureau of the Census) or a Standard Metropolitan Statistical Area (where an area is so designated).

i. Emergency medical service (EMS) level II trauma service—the level of various services and staffing that qualify a facility to be designated by the emergency medical service division of the Iowa department of public health, using the facilities categorization criteria of such services that is in effect on the date of the enactment of this standard.

j. Shared service agreements—a multi-institutional arrangement for coordination or consolidation of services or sharing of support services. Among the various types of arrangements are referred services, purchased or joint contract services, multisponsored services and regional services.

k. CT consortia—a cooperative venture in which two or more institutions form a separate entity which is created for the purpose of owning, leasing, planning for, and maintaining the use of the scanner. Each facility in the consortium maintains its autonomy for all other services.

l. Applicant—an applicant may be a facility or a consortium of facilities within an area, or a physician or group of physicians.

m. General imaging procedures—a radiological diagnostic procedure performed on an X-ray machine or similar radiological diagnostic instrument.

n. Active oncology service—full, multidisciplinary cancer care, provided by a medical team that would include: surgery, gynecology, medical oncology, radiation oncology, pathology, diagnostic radiology and nuclear medicine. The surgery specialties that might be available would include: thoracic, abdominal, genitourinary and gynecological. The active oncology staff would include those specialists with training in oncology, hematology, and pathology and who spend at least half of their time at the institution.

o. Radiotherapy service—the therapeutic application of megavoltage radiation, using a linear accelerator or cobalt unit. The availability of such service at a hospital would necessitate personnel trained in the therapeutic application of radiology.

p. Chemotherapy service—the treatment of cancer by chemical agents.

203.4(3) *Determination of need.*

a. Applicants who do not now have a scanner, or who have a scanner and seek a certificate for one or more additional scanners.

(1) Applicants in areas with no other scanners.

i. Applicants must have performed at least 30,000 general imaging procedures during the past calendar year or 12 months, or

ii. Demonstrate that during the past calendar year or 12 months, the applicant performed diagnostic procedures equivalent to 1500 HECTs, using the following scale:

50% of the number of radioisotopic brain scans × 1.75

25% of the number of cerebral angiograms/arteriograms × 1.75

100% of the number of pneumoencephelograms × 1.75

100% of the number of echoencephelograms × 1.17

10% of the number of skull X-rays × 1.75

100% of the number of patients referred to other facilities for CT diagnosis × 1.75 (in the case of head scans) and 2.75 (in the case of body scans)

(2) Applicants in areas with one or more scanners.

i. An applicant must meet the requirement of need, described in 203.4(3)*"a"*(1), and

ii. The average level of utilization for scanners within the area was at least 3000 HECTs (plus or minus 10 percent) for the past calendar year or 12 months. The average level of utilization will be determined by adding the number of HECTs performed during the period at all area facilities divided by the number of facilities.

iii. The University of Iowa Hospitals and Clinics is specifically exempted from consideration under ii., directly above, because it has a service area that encompasses the entire state and adjoining states. The utilization statistics for the University Hospital will therefore neither affect nor be affected by Mercy Hospital, Iowa City. Additionally, the utilization statistics for scanners at the University of Nebraska Hospitals and Clinics and St. Joseph's Hospital (both in Omaha) will not affect the need for scanners at hospitals in Council Bluffs.

b. Replacement scanners—applicants who currently have a scanner.

(1) All applicants seeking to replace a scanner with another scanner, head or body.

i. The applicant must demonstrate that the applicant's use of the applicant's current scanner was at least at the operating capacity level during the last calendar year or 12 months, or

ii. Below the operating capacity level, but above 1500 HECT level, and the applicant must demonstrate reasons for permanently utilizing their scanner below operating capacity level and demonstrate that discontinuation of their scanner service would impair the applicant's ability to respond to the emergency needs of the area. Reasons for utilizing the scanner below the capacity should include a unique patient or procedure mix which would define the capacity level differently for this applicant.

(2) Applicants seeking to replace a head scanner with a body scanner.

i. The applicant must meet the requirements listed in 203.4(3)*"a,"* and

ii. The applicant must meet the requirements for applicants seeking body scanners in 203.4(6), "Quality."

203.4(4) *Costs—whole body and head scanners.*

a. *Financial feasibility.* (Sections 135.64(1)*"f," "i," "p"*) CT scanners should be depreciated over a period of not less than seven years. Remodeling shall be depreciated as appropriate by generally accepted accounting principles.

b. *Cost-effectiveness.*

(1) Applicants should demonstrate for themselves and the health care system that the most cost-effective method of providing CT services has been chosen. If a CT scanner which requires less than 20 seconds to produce one section is chosen, the applicant should demonstrate the scanner's cost-effectiveness over scanners requiring greater than 20 seconds to produce one section. If a CT scanner which requires 20 seconds to 2 minutes to produce one scan is chosen, the applicant should demonstrate the scanner's cost-effectiveness over scanners requiring greater than 2 minutes to produce one section.

(2) Proposed new and replacement CT scanner's cost per CT scan should, when compared to their peers, demonstrate cost-effectiveness.

203.4(5) *Accessibility.* (Sections 135.64(1)*"c," "d"*)

a. All scanners must be available for emergency use 24 hours a day, less any down time. (Section 135.64(1)*"d."*)

b. Services should be provided to all patients regardless of the patient's ability to pay, taking into consideration the availability of those programs available in the state which serve the medically indigent.

c. Applicants will demonstrate a willingness to accept referrals for CT services from all area physicians.

d. All applicants must demonstrate through documented correspondence that an attempt has been made to form shared CT service agreements with all facilities within the area.

203.4(6) *Quality.* (Sections 135.64(1)*"i," "k"*)

a. Data on use and costs of the CT scanners should be submitted to the Iowa department of public health as a condition of approval. (Sections 135.64(1)*"a," "h"*)

b. All scanners.

(1) All applicants must demonstrate that they have on their staff or will acquire on their staff a full-time diagnostic radiologist, trained in the use of the CT scanner, or other physicians with comparable training and expertise.

(2) All applicants must document that they have on their medical staff individuals who are qualified to operate a scanner and interpret and act upon the diagnostic results. Such documentation may include reference to board certification, apprenticeship, academic credentials or such other qualifications that would prompt a medical staff to accept the responsibility for offering this new service. Applicants who intend to acquire staff with the desired expertise should provide signed letters of intent from the incoming medical personnel. Applicants who intend to upgrade the specialty skills of their staff should document a plan for training their current staff in the use of CT scanners.

(3) All applicants should have a complement of other diagnostic modalities available. Applicants seeking body scanners should also have available ultrasound, radionuclide scanning and conventional X-ray services.

(4) All applicants should have the facilities for treating the conditions diagnosed by imaging with the scanner or should demonstrate referral agreements with treatment facilities, in the event that the scanner will be used as a screening device.

(5) All applicants should have on their staff or available on a consultative basis the services of a biomedical engineer or radiation physicist, with special training in CT applications. These functions may also be provided by contract with the scanner manufacturer.

c. Head scanner only.

(1) Applicants for a head scanner should be a facility which qualifies for EMS Level II Trauma Service.

(2) If an applicant does not qualify for Level II Trauma Services, it must demonstrate that it has or will acquire a specialty practice in the field of diagnosing neurologic disorders, exclusive of neuropsychiatric disorders.

d. Body scanner only.

(1) Applicants for a body scanner must meet the criteria for EMS Level II Trauma Service.

(2) Applicants for a body scanner must be a hospital with 200 or more acute care beds. An applicant who does not meet the 200-bed rule may qualify for a body scanner if the applicant directly provides active oncology services with radiotherapy or chemotherapy treatment services, or both.

203.4(7) *Continuity.* (Sections 135.64(1)*"g," "h," "i," "k"*)

a. The applicant should demonstrate that an attempt was made to solicit letters and to establish referral agreements from area hospitals and physicians to indicate a willingness to participate in a cooperative endeavor to refer to the proposed service.

b. The applicant should provide documentation that emergency medical transport services will be available.

c. The applicant should demonstrate an emphasis on the availability of outpatient CT procedures, and that an appropriate percentage of all CT procedures on head and whole body units will be done on an outpatient basis.

203.4(8) *Acceptability.* (Section 135.64(1)*"k"*) Providers of CT services should indicate a willingness to observe the rights of patients.

203.4(9) Rescinded effective 1/28/81.

641—203.5(135) Long-term care.

203.5(1) *Purpose and scope.*

a. These standards are measures of criteria found in Iowa Code sections 135.64(1)*"a"* to *"g."* Criteria which are measured by a standard are cited in parentheses following each standard.

b. Certificate of need applications which are to be evaluated against these standards include applications to:

(1) Construct, develop, offer new, modernize, replace, renovate, or relocate intermediate care or skilled nursing care beds in nursing homes or hospitals.

(2) Expand bed capacity in intermediate care or skilled nursing care facilities or designated units in hospitals.

203.5(2) *Definitions.*

"Intermediate care facility" (ICF) means any institution, place, building, or agency providing for a period exceeding 24 consecutive hours accommodation, board, and nursing services, the need for which is certified by a physician, to three or more individuals, not related to the administrator or owner thereof within the third degree of consanguinity, who by reason of illness, disease, or physical or mental infirmity require nursing services which can be provided only under the direction of a registered nurse or a licensed practical nurse.

"Rural counties" means all counties not designated by the U.S. Census as SMA (Standard Metropolitan Area) counties.

"Skilled nursing facility" (SNF) means any institution, place, building, or agency providing for a period exceeding 24 consecutive hours accommodation, board, and nursing services, the need for which is certified by a physician, to three or more individuals not related to the administrator or owner thereof within the third degree of consanguinity who by reason of illness, disease, or physical or mental infirmity require continuous nursing care services and related medical services, but do not require hospital care. The nursing care services provided must be under the direction of a registered nurse on a 24-hour-per-day basis.

"Urban counties" means those counties designated by the U.S. Census as SMA (Standard Metropolitan Area) counties.

203.5(3) *Availability and need.* (Iowa Code sections 135.64(1)*"c," "d," "e," "g," "h"*)

a. The following formula shall be used as a means of projecting the approximate number of intermediate and skilled nursing care beds needed to serve the projected population five years into the future:

(1) Rural counties:

[.09(65 + population) + .0015 (64 – population)] × 110% equals total long-term care bed need
Combined SNF and ICF bed need equals 2/3 (total long-term care bed need)
Assumed RCF bed need equals 1/3 (total long-term care bed need).

(2) Urban counties:

[.07(65 + population) + .0015 (64 – population)] × 110% equals total long-term care bed need
Combined SNF and ICF bed need equals 2/3 (total long-term care bed need)
Assumed RCF bed need equals 1/3 (total long-term care bed need).

(3) Department of economic development population projections are adopted for use in the determination of long-term care bed need.

(4) The department of public health will calculate long-term care bed need figures annually, using population projections five years into the future.

b. For purposes of comparing "need" to "existing" beds in a given county, the following shall be considered in the calculation of "existing" beds:

(1) ICF and SNF beds licensed at freestanding facilities in the county.

(2) Additional ICF and SNF beds previously approved through certificate of need but not yet licensed.

(3) ICF and SNF beds in designated units in hospitals in the county.

c. The statistical calculation of bed need shall serve as a guideline for the health facilities council in reviewing need for the proposed long-term care beds. Other factors which may be considered by the council include, but are not limited to:

(1) The availability and utilization of other ICF and SNF services in the county, or within the applicant's service area.

(2) The availability and utilization of other long-term care services in nearby hospitals, such as skilled care available through the swing bed program.

(3) The availability of supportive living arrangements which may or may not be licensed as residential care facilities (RCF).

(4) The availability of home health and other in-home services.

(5) The availability of other services to the elderly.

(6) The availability of ICF and SNF services in neighboring counties.

(7) Utilization by out-of-state residents of facilities in counties bordering other states, where the applicant provides evidence that in-migration of long-term care patients exceeds out-migration to the bordering state.

(8) Programs and services directed at special populations whose needs cannot otherwise be met, or whose needs cannot be met cost-effectively at other facilities.

d. In documenting need for a project, the applicant shall identify the service area and target population, including a description of the methodology used by the applicant in determining need for the requested beds and the expected sources of referrals. The applicant shall document that the number of beds requested is appropriate to address the identified need. The applicant shall also identify how the target population is currently being cared for, and what hardship is being experienced by the absence of the proposed beds.

203.5(4) *Quality.* (Iowa Code sections 135.64(1)*"i," "k"*) The applicant shall document that the applicant has contacted the health facilities division of the department of inspections and appeals to conform with physical standards, staffing requirements, and other licensing requirements to assess the potential for provision of quality care at the facility. When necessary, the applicant shall attempt to arrange an on-site visit to the facility to determine compliance with physical requirements, and shall provide documentation of this site visit or attempts to arrange such a site visit.

203.5(5) *Continuity.* (Iowa Code sections 135.64(1)*"g," "h," "k"*)

a. The applicant shall document the relationship of the facility's proposed services to other health and long-term care services in the community such as physician and hospital services, habilitation, rehabilitation, transportation or other services. The facility should be capable of providing or arranging for the provision of a continuum of long-term care services.

b. The facility should be capable of providing or arranging for the provision of a comprehensive program of coordinated patient services. The applicant shall provide evidence of contracts for services, appropriate staffing patterns and ratios, and licensure of personnel as necessary.

203.5(6) *Accessibility and acceptability.* (Iowa Code sections 135.64(1)*"c," "d"*)

a. Population subgroups which have traditionally been underserved, such as adolescents, the elderly, women, racial minorities, mentally ill, mentally retarded, and developmentally disabled should be considered when planning for or reviewing long-term care facilities.

b. The applicant shall document to what extent Medicaid patients will be served by the proposed beds, using past Medicaid utilization as an indicator or, in the case of a new facility, projecting anticipated Medicaid utilization.

203.5(7) *Costs and financial feasibility.* (Iowa Code sections 135.64(1)*"e," "f," "i," "p"*)

a. The applicant shall identify capital and operating costs associated with the project, identify sources of funding to cover those costs, and demonstrate that the project is financially feasible.

b. Construction costs shall be in line with construction costs of other similar projects.

c. The applicant shall provide budgets for the first three years of operation, including documentation of all assumptions used. The budget shall include anticipated sources of revenue, including the percentage of revenue from private pay, Medicaid, Medicare and other patient revenues.

d. Proposed charges per patient day should be justifiable when compared to current charges of other similarly licensed facilities in the applicant's service area, or other similar facilities elsewhere in the state. If charges are significantly higher or lower, the applicant shall provide a description of proposed programs or services which explain the difference in charges.

641—203.6(135) Bed need formula for mentally retarded.

203.6(1) *Age—ten years to sixty-five years.* It was determined that services for mentally retarded under age 10 would in most cases be met in the home and that in many cases not identified until approximately that age. For age 65 and older, the services needed would in most cases be similar to those of geriatric needs.

203.6(2) *Levels of retardation in population.*

a. Mildly retarded	2.6%
b. Moderately retarded	.3%
c. Severely and profoundly retarded	.1%
% of mentally retarded in total population	3%

90% of *"c"* need services outside of home
50% of *"b"* need services outside of home
0% of *"a"* need services outside of home

203.6(3) *Formula.*

.1% (90%) = .09
.3% (50%) = .15
.24 ÷ .03 = 8%

(8% of mentally retarded population need services outside of home)
8% of mentally retarded population = number of ICF/RCF beds
20% of all beds = ICF/MR beds at state-operated institution
30% of all beds = ICF/MR community-based facilities
50% of all beds = residential type services for all types of facilities.

641—203.7(135) End-stage renal disease standards.

203.7(1) *Purpose and scope.*

a. These standards are measures of some of those criteria found in Iowa Code sections 135.64(1)*"a"* to *"g."* Criteria which are measured by a standard are cited in parentheses following each standard.

b. Certificate of need applications which are to be evaluated against end-stage renal disease standards include:

(1) Proposals to expand the number of renal dialysis stations or renal transplant services.

(2) Proposals to add new transplant or dialysis services.

(3) Any other applications which relate to end-stage renal disease services.

203.7(2) *Definitions.*

a. *Dialysis.* A process by which dissolved substances are removed from a patient's body by diffusion from one fluid compartment to another across a semipermeable membrane. The two types of dialysis which are currently in common clinical practice are hemodialysis and peritoneal dialysis. In these rules a dialysis is used to mean one treatment.

b. Dialysis station. Any permanent or portable dialysis machine to a health care facility which is set up to service mainly ESRD patients. Back-up dialysis machines which are used for isolation and acute cases are excluded from the definition of dialysis station except where specifically mentioned in particular standards.

c. End-state renal disease (ESRD). That stage of renal impairment which is virtually always irreversible and permanent, and requires dialysis or kidney transplantation to ameliorate uremic symptoms and maintain life.

d. ESRD facility. A facility which is approved to furnish at least one specific ESRD service (see June 3, 1976 Federal Register 405.2102(f)). Such facilities are:

(1) Renal transplantation center. A hospital unit which is approved to furnish directly transplantation and other medical and surgical specialty services required for the care of the ESRD transplant patients, including inpatient dialysis furnished directly or under arrangement. A renal transplantation center may also be a renal dialysis center.

(2) Renal dialysis center. A hospital unit which is approved to furnish the full spectrum of diagnostic, therapeutic (including inpatient dialysis furnished directly or under arrangement), and rehabilitative services, except renal transplantation required for the care of ESRD dialysis patients.

(3) Renal dialysis facility. A unit which is approved to furnish dialysis services to ESRD patients. Renal dialysis facilities may be hospital or nonhospital based.

e. ESRD service. The type of care or services furnished to an ESRD patient. Such types of care are:

(1) Transplantation services. A process by which a kidney is excised from a live or cadaveric donor. Such kidney is implanted in an ESRD patient and supportive care is furnished to the living donor and to the recipient following implantation.

(2) Dialysis service.

1. Outpatient dialysis. Self-dialysis, which is performed with little or no professional assistance by a patient with appropriate training; and staff-assisted dialysis which is performed by the staff of the center or facility.

2. Inpatient dialysis. Dialysis which, because of medical necessity, is furnished to an ESRD patient on a temporary basis in a hospital.

3. Home dialysis. Dialysis performed at home by an appropriately trained ESRD patient.

f. Network, ESRD. An approved organized group of ESRD facilities in a designated geographic area which by their type and location, and because of local referral patterns, collectively furnish the necessary care for ESRD patients in the population served.

g. Organ procurement agency. An organization which performs, or coordinates the performance of, all the following services:

(1) Harvesting of donated kidneys;

(2) Preservation of donated kidneys;

(3) Transportation of donated kidneys;

(4) Maintenance of a system to locate prospective recipients for harvested organs.

203.7(3) *Availability of services.*

a. Renal dialysis centers and renal dialysis facilities. (Sections 135.64(1)*"c," "d," "e," "g," "h"*)

(1) Renal dialysis centers and renal dialysis facilities located within a standard metropolitan statistical area (SMSA) of 500,000 population or greater, which perform greater than 20 percent of dialyses on ESRD outpatients should have a minimum of six stations performing a minimum of 4.5 dialyses per station per week within three years of beginning operation or expanding.

(2) Renal dialysis centers and renal dialysis facilities, located within a SMSA or other service area of less than 500,000 population, which perform greater than 20 percent of dialyses on outpatients, should have a minimum of three stations performing a minimum of 4.0 dialyses per station per week within three years of beginning operation or expanding.

(3) Self-dialysis training stations which are used to successfully train at least six self-care or home dialysis ESRD patients per calendar year, and the dialyses performed on these stations, may be excluded from the calculation of utilization rates in standards (1) and (2).

(4) There should be no renal dialysis centers or renal dialysis facilities performing less than 20 percent outpatient dialyses.

(5) Each renal dialysis center and renal dialysis facility may have a reasonable number of back-up dialysis stations for isolation and acute cases.

b. Renal transplantation centers should perform 25 or more transplants annually and have a service area population of at least 2 million people.

c. Expansions. (Sections 135.64(1)*"c," "d," "e," "g," "h"*)

(1) There should be no additional renal dialysis centers or renal dialysis facilities, unless all stations within 90 minutes travel time are performing at a rate of at least 7 dialyses per station per week.

(2) There should be no expansions of an existing renal dialysis center or facility, unless that facility is performing at least 7 dialyses per station per week and the applicant's projected cost studies demonstrate that an expansion of service capacity is more cost-effective (when operating capital costs are weighed) than offering the service at current capacity for two shifts per day.

(3) Self-dialysis training stations which are used to successfully train at least six self or home dialysis ESRD patients per calendar year, and the dialyses performed on these stations are to be excluded from the calculation of the previous standards (1) and (2).

(4) There should be no increase in the number of dialysis stations or centers if less than 35 percent of ESRD patients in the catchment area of that center or facility are on home or self-care dialysis, unless 100 percent of the ESRD dialysis patients at that center or facility have been evaluated by personnel or an appropriate training center for and where feasible entered into a program of home or self-dialysis training.

(5) New renal dialysis facilities or centers should be initiated only if the applicant can demonstrate a reasonably large unserved population within 90 minutes travel time of the proposed site.

(6) Each transplant center in the ESRD Network should perform a minimum of 50 transplants annually before additional transplant centers are open. (For the purpose of this document, the Veteran's Administration Hospital at Iowa City and the University of Iowa Hospitals and Clinics are considered to be one transplant center.)

203.7(4) *Cost.* (Sections 135.64(1)*"f," "i," "p"*) Proposed new or expanded renal dialysis facility's or renal dialysis center's estimated cost per dialysis treatment should when compared to their peers, demonstrate cost-effectiveness.

203.7(5) *Accessibility.* (Sections 135.64(1)*"c," "d"*) The service area for renal dialysis facilities and centers should be that area within 90 minutes travel time by auto of that facility or center.

203.7(6) *Quality.* (Sections 135.64(1)*"i," "k"*) ESRD services shall meet all applicable federal quality control standards, as published in the June 3, 1976 Federal Register, "Renal Disease: Implementation of Coverage of Suppliers of End-Stage Services," and "Federal Health Insurance for the Aged and Disabled: Requirements for Self-Dialysis Units and Self-Dialysis Services," sections 405.2134, 405.2135, 405.2136, 405.2137, 405.2139, 405.2140, 405.2160, 405.2161, 405.2162, 405.2163, 405.2171.

203.7(7) *Continuity.* (Sections 135.64(1)*"g," "h," "i," "k"*) Proposed new ESRD facilities and those ESRD facilities proposing expansions should have membership in an ESRD network.

203.7(8) *Acceptability.* (Section 135.64(1)*"k"*) Patients' rights and responsibilities should be assured in accordance with the June 3, 1976 Federal Register, "Renal Disease: Implementation of Coverage of Suppliers of End-Stage Services," section 405.2138.

These rules are intended to implement Iowa Code section 135.72.

641—203.8(135) Financial and economic feasibility.

203.8(1) *Purpose and scope.*

a. These standards are measures of some of those criteria 1^1(a to q) found in Iowa Code section 135.64. Criteria 1^1(a to q) which are measured by a standard are cited below:

Financial feasibility subrule 203.8(3), paragraph *"b,"* criteria 1^1*"b," "c," "p"*; subrule 203.8(3), paragraph *"c,"* criteria 1^1*"f," "p"*; subrule 203.8(3), paragraph *"d,"* criteria 1^1*"c," "f," "p," "q."*

Economic feasibility subrule 203.8(4), paragraph *"a,"* criteria 1^1*"e," "f," "g," "i," "p," "q."*

b. Certificate of need applications which are to be evaluated against these financial and economic feasibility standards include institutional health facilities, as defined in Iowa Code section 135.61.

203.8(2) *Definitions.*

a. *Project.* The remodeling, replacing or equipping of existing buildings, as well as the building or equipping of new structures.

b. *Financial feasibility.* The applicant's demonstration that it has the money, or that it can reasonably expect to obtain moneys equal to the estimated project costs, to any debt associated with the project, and to the annual expenses of providing the service, as well as the demonstration of overall institutional financial strength.

c. *Financial ratio analysis.* Evaluation of the financial position of an organization through creating indexes of income, revenue, assets, liabilities, etc. Financial ratios can be classified into liquidity, capital structure, activity and profitability ratios. Financial ratios measure financial feasibility.

(1) Net margin. The net income (after taxes if the applicant is not tax-exempt) minus nonoperating revenue divided by gross revenue.

(2) Net operating margin. Net income (after taxes if the applicant is not tax-exempt) minus nonoperating revenue divided by total operating revenue.

(3) Current asset ratio (current ratio). Current assets divided by current liabilities.

(4) Debt ratio. Total long-term debts divided by total fixed assets.

(5) Debt service coverage. The total of net income, interest expense, amortization of financing costs, and depreciation plus amortization and interest divided by the annual debt service.

(6) Days revenue in accounts receivable. Gross accounts receivable divided by gross patient revenue divided by 365.

d. *Debt financing.* Any portion of the cost of projects to be financed through borrowing either at the time the project is undertaken or at anytime subsequent thereto.

e. *(Gross) revenue.* Total of operating and nonoperating revenues.

f. *Nonoperating revenues.* Revenues not related to patient care or normal day-to-day operations, including unrestricted gifts, unrestricted endowments, income from the sale of a fixed asset, unrestricted income from a restricted or unrestricted fund, rental of facilities not used in operation, etc. (restricted funds are specifically excluded, unless expended during the accounting period, in which case they are accounted for either as operating or nonoperating revenues).

g. *Operating revenues.* Net patient service revenues (patient revenues minus deduction for charity, contractual and bad debt allowances) and other operating revenues.

h. *Excess (or deficiency) of gross revenues over (or under) expenses.* Net income.

i. *Excess (or deficiency) of operating revenues over (or under) expenses.* Net operating income.

j. *Economic feasibility.* The applicant's demonstration that its project will provide for the allocation of scarce resources within a community in a manner that is of maximum benefit to that community, in other words demonstration that the project will be cost-effective and will contain health care costs to the greatest extent possible.

k. *Expense.* An expired cost (cost = price paid for operations and assets, including leased assets vis-a-vis cash outlay, indebtedness incurred, or cash equivalent) incurred directly or indirectly in earning revenue. Expenditures may be expended over many years.

l. *Asset.* Economic potentials from which future benefits are expected to result, include leased capital equipment.

m. *Liabilities.* Debts or obligations.

n. *Gross patient revenues.* Patient service revenues before allowances for bad debt and charity and contracts.

o. *Debt service.* The payment of matured interest and principal; the outlay needed, supplied, or accrued for meeting such payments during any given accounting period; a budget or operating statement heading such items.

p. *Current assets.* Liquid assets which can be expected to directly or indirectly be converted into cash within one year or the operating cycle, whichever is longer (includes leased assets).

203.8(3) *Financial feasibility analysis.*

a. The applicant will provide financial feasibility analysis of the project's (facility's) past and projected costs, as requested by the Iowa department of public health.

b. The applicant shall show evidence of sound financial planning.

(1) If the sponsor has a long-range institutional plan, the project should be consistent with it. If the sponsor has no long-range institutional plan, the applicant shall demonstrate that the proposal helps meet the long-range needs of the community.

(2) The project should be consistent with the sponsor's three-year capital expenditure plan which all hospital and skilled nursing facilities must have.

c. The applicant shall demonstrate the financial feasibility of the services (institution) at completion and, shall show evidence of sound historical, financial, and operational management.

(1) The net operating margin should be positive. If a net loss is projected following completion of the project, an explanation of source funds should be given. Institutions funded by tax levy or endowment shall demonstrate that money from those sources has been historically applied to cover operating expenses if those institutions have a negative net operating margin.

(2) The net margin should be positive. If net loss is projected an explanation of source funds should be given.

(3) The past and projected current ratio should be at least 2:1.

(4) Past and projected debt service coverage ratio should be at least 2:1.

(5) The debt financing of a project should not increase the debt ratio above .8 unless debt service payments will derive from sources other than operating revenues.

(6) Days revenues in accounts receivable should not have been more than 65 days.

(7) If third party payment can be expected for the project, then some documentation indicating that the type of project which is proposed is generally third party reimbursable should be provided.

d. Sponsors shall show evidence of past efficient utilization. Standards (1) and (2) below apply to hospital project applications for:

—Construction of new acute care beds;

—Modernization or renovation of acute care beds/patient nursing units;

—Conversion of acute care beds from one service use to another;

—Addition to the square footage space of the hospital, where it might be architecturally feasible and cost-effective to convert excess bed space.

(1) Hospitals should have been no lower than 5 percent below the implicit target occupancy rate according to the bed need formula for the last year. Additionally hospitals with lower than target occupancy rates should show a trend during the last three years of increasing occupancy rates. This 5 percent refers to deviation on a scale of 1-100 percent and not to 5 percent of the target occupancy rate itself. Long-term care facilities should have had a 90 percent average occupancy for the last three years.

(2) Hospitals should have an average length of stay by service no greater than 10 percent above the average of their size category for the last three years.

Standards (1) and (2) above do not amend rule 641—203.1(135) acute bed care need methodology. But are additional measures of financial viability which supplement rule 641—203.1(135).

(3) Prior to the project's initiation, the full-time equivalent employees per adjusted patient day as reported in the most recent American Hospital Association Hospital Statistics should be no greater than 110 percent of the state average for hospitals of similar size. Categories of hospitals of similar size are:

Beds
6-24
25-49
50-99
100-199
200-299
300-399
400-499
500+

Adjusted patient day as used here is defined in Hospital Statistics, AHA, 1978.

Nursing homes shall meet regulations for licensure personnel requirements.

(4) Prior to initiation of a project, the cost per patient day of a hospital should be within 10 percent of the state average for hospitals within that size category. (See standard 203.8(3)*"d"*(3) for size categories.) An applicant's costs, which are incurred as a result of shared service contracts with other entities, and which are not charged to patients within the applicant's facility should not be included in the estimation of costs per patient day.

203.8(4) *Economic feasibility.*

a. The project as proposed shall be cost-effective.

(1) The applicant should demonstrate that the project represents the most cost-effective alternative. Such alternatives include, among others, new construction versus renovation and new service versus shared or contracted services.

(2) The applicant should demonstrate that of the financing methods available, the financing method chosen is the least costly alternative.

(3) Applicants shall demonstrate that construction or renovation costs are reasonable when compared to similar projects of the most recent year.

(4) The net operating margin should not exceed a percentage sufficient to provide for the organization's financial requirements, as defined in "Financial Requirements of Health Care Institutions and Services" (American Hospital Association, S031, February 1979), and limited by existing reimbursement payors.

(5) Facilities should show evidence that they have considered alternate energy sources within their institutions; and energy efficiency in project construction design.

b. Reserved.

This rule is intended to implement Iowa Code section 135.74.

[1] Iowa Code section 135.64(1).

641—203.9(135) Obstetrical services and neonatal intensive care unit standards.

203.9(1) *Purpose and scope.*

a. These standards are measures of some of those criteria 1(a to q) and 3 found in Iowa Code section 135.64. Criteria which are measured by a standard are cited in parentheses following each standard.

b. Certificate of need applications for new institutional, or changed institutional health services, which are to be evaluated by the standards in this section, are those applications to:

(1) Offer new, discontinue, or change the level of perinatal services;

(2) Construct, develop, offer new, modernize, replace, renovate or relocate neonatal intensive care services;

(3) Expand bed capacity in neonatal intensive care units.

203.9(2) *Definitions.*

a. "*Perinatal services"* means the facilities, equipment and personnel which provide fetal, neonatal, and maternal care from the first indication of pregnancy up through and including birth and to the time when mother and infant are in stable health. Perinatal services in acute care facilities are classified by the Iowa department of public health into three levels of centers. For detailed descriptions of what constitutes levels of obstetrical and neonatal services, reference Standards for Perinatal Centers (most recent edition), Iowa department of public health.

(1) Level I perinatal centers are hospitals whose function it is to provide neonatal nursery and obstetrical services for uncomplicated newborn and maternity patients. Certain level I centers with large numbers of births may offer some of those neonatal and obstetrical services associated with regional level II perinatal centers.

(2) Regional level II perinatal centers are designated hospitals whose responsibility is to provide care for the majority of complicated/high-risk fetal, neonatal and maternal patients in their areas. Regional level II referral area facilities have:

1. A defined referral area;
2. An educational outreach program; and
3. Staffing for maternal and neonatal emergency transport in the referral area.

Regional level II perinatal centers also provide level I neonatal and obstetrical services.

(3) Level III perinatal centers are designated hospitals whose priority responsibility is to provide tertiary care for all types of fetal neonatal and maternal illnesses and abnormalities. Tertiary responsibilities are to provide:

1. Consultation to level I and level II centers;
2. Transportation from level I and level II centers;
3. Continuing education and training for level I and level II centers.

Level III centers also provide level I and level II perinatal services.

b. "*Obstetrical unit"* means the labor, delivery, post partum, auxiliary facilities and primary care nursery unit in any perinatal center. The intensity of obstetrical services differs between the three levels of perinatal centers. Intensity means the kinds of personnel and equipment, and to a lesser extent physical facilities available, and is related to the number of births occurring at a facility. Auxiliary facilities include, but are not limited to, scrub facilities, equipment rooms, formularies, sterilization facilities, and drug distribution stations.

c. "*Neonatal intensive care unit"* means a nursery unit for neonates who are critically ill or of extremely high risk.

203.9(3) *Availability.*

a. Relationship of perinatal centers to Iowa department of public health's perinatal standards committee.

(1) Each hospital submitting an application shall identify in writing the level of care at which the state health plan classifies that hospital's perinatal services, as identified by the Iowa department of public health's perinatal standards committee.

(2) In addition to meeting the standards which follow, each applicant which seeks to change the level of care at which the state health plan classifies its perinatal services should submit to the department, during the letter of intent period, additional information in which the applicant describes the degree of conformance with the perinatal standards for the level of care that it seeks to deliver.

(3) Upon receipt of the additional information, the staff to the health facilities council shall seek a recommendation of the perinatal standards committee as to the applicant's conformance to the standards.

b. Minimum utilization—neonatal intensive care units. Each regional perinatal center service area should have no more than four neonatal intensive care beds per 1,000 live births.

c. Expansions. Applications for expanding or starting new neonatal intensive care units should not receive approval unless they have received the endorsement of the Iowa department of public health's perinatal standards committee. Such endorsement should be accompanied by an analysis of the impact the new beds will have on the occupancy rates of other neonatal intensive care units in the same referral area.

203.9(4) *Costs.* See financial and economic feasibility standards, 641—203.8(135).

203.9(5) *Accessibility.*

a. Travel time to a level I obstetrical unit should not exceed 30 minutes for 80 percent of the population served by that unit.

b. Services should be provided regardless of ability to pay, in consideration of those programs available in the state which serve the medically indigent.

203.9(6) *Quality.* Facilities should meet those Standards for Perinatal Centers (most recent edition), Iowa department of public health, for the levels of care which they provide.

203.9(7) *Continuity.* Facilities should meet those Standards for Perinatal Centers (most recent edition), Iowa department of public health, for the levels of care which they provide.

203.9(8) *Acceptability.* Facilities with neonatal and obstetrical services shall document a willingness to observe and respect the rights of patients. Provisions for counseling services shall be available.

This rule is intended to implement Iowa Code section 135.64.

641—203.10(135) Designated pediatric units standards.

203.10(1) *Purpose and scope.*

a. These standards are measures of some of those criteria 1^1(a to q) found in Iowa Code section 135.64. Criteria 1^1(a to q) which are measured by a standard are cited in parentheses, following each standard.

b. Certificate of need applications for new institutional or changed institutional health services, which are to be evaluated by the standards in this rule, are those applications to:

(1) Construct, develop, offer new, modernize, replace, renovate or relocate designated pediatric units, services and equipment;

(2) Expand bed capacity in designated pediatric units.

203.10(2) *Definitions.*

a. *Designated pediatric units.* A designated set of hospital facilities with equipment and personnel planned for the care of infants (other than newborn) and children (usually less than 16 years of age). According to 641—Chapter 51 of the Iowa Administrative Code, pediatric units constructed after 1976 have in addition to patient rooms, nurseries, nursery workrooms, examination and treatment room for nurseries; multipurpose rooms for dining, education and play; space for preparation and storage of infant formula; patient toilet room(s) convenient to multipurpose room equipment; and storage space for replacement of youth and adult beds to provide for swing capacity. Nurse staffing for pediatric units should have special training in pediatrics. While usable bed capacity in a section of a facility may be a designated pediatric unit, beds in that unit may be swung when peak patient census demands such.

b. *Swing bed.* Acute care beds which may serve adult medical/surgical patients, and pediatric patients, depending upon the patient census.

203.10(3) *Availability.*

a. *Minimum utilization.* (Sections 135.64(1)*"c," "g," "h"*)

(1) All designated pediatric units should operate at least at the following minimum occupancy rates:

Beds	% Occupancy	Beds	% Occupancy
< 10	60%	32-35	68%
11-13	61%	36-39	69%
14-15	62%	40-47	70%
16-17	63%	48-55	71%
18-19	64%	56-63	72%
20-23	65%	64-71	73%
24-27	66%	72-79	74%
28-31	67%	80+	75%

Facilities which cannot justify a designated pediatrics unit based on the above minimum occupancy rates are encouraged to care for pediatric patients in medical surgical beds.

b. *Expansions.* (Sections 135.64(1)*"c," "d," "e," "g," "h"*)

(1) Designated pediatric units in a multihospital community should be operating at least at the minimum occupancy levels of 203.10(3)*"a"*(1) before additional beds are approved. Expansion of designated pediatric units in a multihospital community which has units running at less than the minimum occupancy rates of 203.10(3)*"a"*(1) and expansion of designated pediatric units which would likely cause other units in the community to operate at less than the minimum occupancy rates should be approved only if such expansions reflect the outcome of a community planning effort which includes recommendations to adopt the least long run cost method of providing designated pediatric services in the community.

203.10(4) *Costs.* See financial and economic feasibility standards, 641—203.8(135).

203.10(5) *Accessibility.* (Sections 135.64(1)*"c," "d"*)

a. Surface travel time to a designated pediatric unit in a service area should not exceed 60 minutes for 80 percent of Iowa's population.

b. Services should be provided regardless of ability to pay, in consideration of those programs available in the state which serve the medically indigent.

203.10(6) *Quality.* (Sections 135.64(1)*"i," "k"*) The proposal should meet all applicable licensure regulations.

203.10(7) *Continuity.* (Sections 135.64(1)*"g," "h," "i," "k"*)

a. The applicant should provide documentation that physician's services are available 24 hours a day, and that registered nursing services are available on-site 24 hours a day.

b. Facilities with designated pediatric units should include mechanisms for comprehensive medical follow-up, including medical records exchange.

203.10(8) *Acceptability.* (Section 135.64(1)*"c"*) Facilities with pediatric services shall document a willingness to observe and respect the rights of patients as stated in the "Patients Bill of Rights" adopted by the American Hospital Association, February 6, 1973, and reprinted in 1975.

This rule is intended to implement Iowa Code sections 135.61 to 135.83.

[1] Iowa Code section 135.64(1).

641—203.11(135) Designated inpatient substance abuse treatment unit standards.

203.11(1) *Purpose and scope.*

a. These standards are measures of some of those criteria found in Iowa Code section 135.64(1)*"a"* to *"g."* Criteria which are measured by a standard are cited in parentheses following each standard.

b. Certificate of need applications which are to be evaluated against these standards include applications to:

(1) Construct, develop, offer new, modernize, replace, renovate, or relocate designated inpatient substance abuse treatment units and services.

(2) Expand bed capacity in designated inpatient substance abuse treatment units.

203.11(2) *Definition.* Designated inpatient substance abuse treatment unit is a designated set of hospital facilities with patient beds, equipment and personnel designed for the treatment and rehabilitation of patients for whom the primary diagnosis is alcohol abuse or dependence or other drug abuse or dependence. Units designated strictly for detoxification are not considered a treatment unit as defined in this standard.

203.11(3) *Availability and need.* (Iowa Code sections 135.64(1)*"c," "d," "e," "g," "h"*)

a. The following formula shall be used as a means of projecting current utilization of inpatient substance abuse treatment services into the future and shall serve as an approximation of the number of beds needed to serve the projected population.

$$\text{Bed Need} = \frac{\text{Population by Thousand}}{\text{80\% Occupancy}} \times \frac{\text{Patient Days per Thousand Population}}{365}$$

The formula shall be calculated separately for community hospitals and state mental health institutes. The methodology for applying the formula shall be as follows.

(1) Bed need shall be calculated annually for a period five years into the future.

(a) "Population by thousand" refers to department of economic development population projection for five years into the future.

(b) For calculating community hospital bed need, "patient days per thousand population" is calculated by dividing the total patient days in all community hospital-based substance abuse treatment units during the past year (as reported on the annual hospital survey by the department of health) by the state population for that year as projected by the department of economic development.

(c) Applying the figures from (1)(a) and (1)(b) in the formula will project a statewide total of likely bed need for community hospital substance abuse treatment units, based on current utilization.

(d) For calculating mental health institute bed need, "patient days per thousand population" is calculated by dividing the total patient days in the four mental health institute substance abuse treatment units (as reported to the department of human services) by the state population for that year as projected by the department of economic development.

(e) Applying the figures from (1)(a) and (1)(d) in the formula will project a statewide total of likely bed need for mental health institute substance abuse treatment units based on current utilization.

(2) For purposes of comparing "need" to "existing" beds in community hospitals, the state shall be divided into eight planning districts, as used by the department of human services.

(a) The total number of beds derived in (1)(c) above for likely bed need for community hospital units shall be divided by the projected state population in thousands to derive beds needed per thousand population.

(b) For each district, the factor in (2)(a) above shall be multiplied by the projected population by thousand in that district for a district bed need.

(c) To determine number of existing beds in a given district, the number of substance abuse treatment beds at all community hospitals in that district shall be added together. The number of beds at each facility shall be the number of licensed or registered beds in the substance abuse treatment unit, as reported on the annual hospital survey to the Iowa department of public health.

(3) For purposes of comparing "need" to "existing" beds in mental health institutes, the total number of beds derived in (1)(e) above for likely bed need for MHI units will be compared to the total of the existing substance abuse treatment beds at the four MHIs in the state as reported on the Iowa department of public health annual survey.

b. In documenting need for a project, the applicant shall identify the service area and target population, including a description of the methodology used by the applicant in determining need for the requested beds, the expected sources of referrals, and expected average length of stay. The applicant shall document that the number of beds requested is appropriate to the modality of treatment being proposed. The applicant shall also identify where the target population has received services in the past.

c. The availability and utilization of other services in the area (e.g., inpatient, outpatient, and residential services) shall be considered in the determination of need. The applicant shall describe the relationship of the proposed service to existing services and describe what impact the proposed service will have on similar or alternate services in the district.

d. Existing hospital-based substance abuse treatment programs in the district should be running at least 85 percent occupancy in units of less than 20 beds and at least 90 percent occupancy in units of 20 beds or more before any additional inpatient substance abuse treatment beds are approved.

e. A hospital seeking expansion of a substance abuse treatment unit must demonstrate that its occupancy has been greater than 90 percent for the past two years.

f. Applicants must be able to project an annual 70 percent occupancy rate in the unit for the second year of operation and must be able to project an 80 percent occupancy rate in the unit by the third year of operation.

203.11(4) *Quality.* (Iowa Code sections 135.64(1)*"i," "k"*)

a. Staffing for an inpatient substance abuse treatment unit should minimally consist of:

(1) Medical director. The applicant shall document that the physician has specific knowledge and special interest in the area of substance abuse and several years of experience and training in the treatment of substance abusers. Physician backup must be available on a 24-hour basis.

(2) Administrative director. The applicant shall document that the director, if other than the medical director, has experience in hospital administration or substance abuse treatment and rehabilitation.

(3) Nursing personnel must staff the unit on a 24-hour basis. The applicant shall document that the RNs and LPNs have had or will be provided with specific training in the area of substance abuse treatment.

(4) Counselors. The applicant shall document the availability of chemical dependency counselors who are certified or have equivalent qualifications in training, education, and experience.

(5) Psychiatrist or psychologist should be available on staff or on a contract basis. The applicant shall document that the psychiatrist or psychologist has shown a continued interest in the area of substance abuse treatment and has experience in dealing with chemically dependent patients.

(6) Family therapist(s): The program shall employ or contract with a family therapist(s) that has completed a chemical dependency counselor training program with emphasis on family involvement; or has a master's level in family social work, family counseling or other appropriate fields; or has the equivalent in training or experience.

(7) Other ancillary personnel. The program should have access to other personnel such as social workers, dieticians, recreational therapists, occupational therapists, physical therapists, and other ancillary services as needed.

b. All inpatient programs shall develop and utilize specific written admission criteria. A good example of such criteria is that developed by the Iowa Foundation for Medical Care.

c. The program shall have a written evaluation system and be capable of providing treatment process and outcome data to evaluate the quality and effectiveness of the program at least once annually.

203.11(5) *Continuity.* (Iowa Code sections 135.64(1)*"g," "h," "k"*)

a. The applicant shall have formal referral arrangements with existing diagnosis and referral services, and detoxification services.

b. If outpatient services are available, the applicant shall provide a description of the circumstances under which a client would be accepted for inpatient treatment rather than entered into the outpatient program. The applicant shall also describe the circumstances under which a patient would be referred from inpatient to outpatient care and should have referral arrangements for outpatient services.

c. The applicant shall document that aftercare or continuing care services will be provided by the facility on a long-term basis or that such services will be provided through referral arrangements.

For patients leaving the vicinity of the hospital to return to their home communities, the applicant shall indicate what arrangements will be made to provide for aftercare.

203.11(6) *Accessibility and acceptability.* (Iowa Code sections 135.64(1)*"c," "d"*) Population subgroups which have traditionally been underserved, such as adolescents, the elderly, women, and racial minorities, should be considered when planning for or reviewing inpatient treatment programs.

203.11(7) *Costs and financial feasibility.* (Iowa Code sections 135.64(1)*"e," "f," "i," "p"*)

a. The applicant shall document that for the target population, hospital-based inpatient care is warranted. The applicant shall demonstrate that alternatives were considered and that there is no less costly acceptable mode of treatment.

b. Charges per patient day should be justifiable when compared to current charges of other inpatient substance abuse treatment programs in the state.

c. The applicant should outline the anticipated sources of reimbursement in preparing the program's projected budget, indicating the percentage of patient days allocated to indigent clients, Medicare clients, private pay clients, privately insured clients or others.

d. Conversion projects will be considered preferable to new construction unless documentation of cost-savings is presented, or other factors to be specified by the applicant prohibit such conversion.

This rule is intended to implement Iowa Code section 135.64.

641—203.12(135) Magnetic resonance imaging services standards.

203.12(1) *Purpose and scope.*

a. These standards are measures of some of those criteria in Iowa Code sections 135.64(1)*"a"* to *"q."* Criteria which are measured by a standard are cited in parentheses following each standard.

b. Certificate of need applications which are to be evaluated against these standards include:

(1) Proposals to commence or expand the capacity of magnetic resonance imaging services.

(2) Proposals to replace a magnetic resonance imaging unit.

(3) Any other applications which relate to magnetic resonance imaging.

203.12(2) *Definitions.*

"Area" means the community or a metropolitan statistical area (as defined by the U.S. Office of Management and Budget and used by the U.S. Census Bureau).

"CT (computed tomography) procedure" means a CT study of a single site of anatomic interest during an individual patient visit.

"Magnetic resonance imaging (MRI)" means a diagnostic modality which employs a combination of magnetic and radio frequency fields and computers to produce images of body organs and tissues.

"MRI procedure" means each discrete MRI study of one patient.

"MRI unit" means the essential equipment and facility necessary to operate one MRI system.

203.12(3) *Availability and need.* (Iowa Code sections 135.64(1)*"c," "d," "e," "g," "h"*)

a. Applicants in areas with no other MRI units. Applicant must document a CT procedure volume of at least 4,500 CT procedures during the most recent calendar or fiscal year period. For purposes of calculating the volumes required, the applicant may use the combined total of more than one facility if the application involves joint ownership of the equipment, or the applicant provides evidence of referral arrangements for the proposed MRI service from the facilities whose procedure or patient volumes are included in the calculations.

b. Applicants in areas with one or more MRI units currently in operation or approved by certificate of need for operation.

(1) Applicant must meet the requirement of need described in 203.12(3)*"a"* and

(2) The other MRI unit(s) within the area must have been operating at a minimum of 3,000 MRI procedures annually (or 750 in three months), or proportionately more if the MRI unit runs more than one ten-hour shift.

(3) If the annual utilization of the other MRI unit(s) within the area has been below 3,000 procedures, future utilization above that current level must be reasonably projected or reasons for permanently utilizing the equipment below the 3,000 procedure level must be demonstrated.

c. Applicants seeking to replace an MRI unit.

(1) The applicant must demonstrate that the existing MRI unit has been operating at the level of at least 3,000 procedures during the most recent annual period.

(2) If the applicant's annual utilization has been below 3,000 procedures, the applicant must reasonably project future utilization above that level or demonstrate reasons for permanently utilizing the equipment below that level.

d. Applicants seeking to add an additional MRI unit.

(1) The applicant must demonstrate that the existing MRI unit(s) has been operating at the level of at least 3,500 procedures during the most recent annual period.

(2) The applicant must demonstrate that the demand significantly exceeds the 3,500 procedures annually.

e. The provisions of subrule 203.12(3) shall be effective until June 30, 1995. Prior to that time the Iowa department of public health shall reconvene a task force to recommend continuing use of the need methodology outlined or develop a new or revised methodology to use in projecting future MRI needs. The department shall promulgate a new subrule 203.12(3) accordingly.

203.12(4) *Quality and continuity.* (Iowa Code sections 135.64(1)*"g," "h," "i," "k"*)

a. The proposed MRI unit must function as a component of a comprehensive inpatient or outpatient diagnostic service. The proposed MRI unit must have the following modalities on-site or through referral arrangements:

(1) Ultrasound

(2) Computed tomography — whole body unit

(3) Angiography

(4) Nuclear medicine

(5) Conventional radiography

b. The proposed MRI unit must be located in a facility which has, either in-house or through referral arrangement, the resources necessary to treat most of the conditions diagnosed or confirmed by MRI. The following medical specialties must be available during MRI service hours on-site or by referral arrangements: neurology or neurosurgery, oncology and cardiology.

c. A proposal to provide new or expanded MRI must include satisfactory assurances that the services will be offered in a physical environment that conforms to federal standards, manufacturer's specifications, and licensing agencies' requirements.

d. The applicant must provide evidence that the proposed MRI equipment has been certified for clinical use by the U.S. Food and Drug Administration or will be operated under an institutional review board whose membership is consistent with U.S. Department of Health and Human Services regulations.

e. Applicants for MRI shall document that the necessary qualified staff are available to operate the proposed unit. The following minimum staff shall be available to the MRI unit:

1. A full-time board eligible or board certified radiologist or nuclear medicine imaging physician or any other board eligible or board certified licensed physician whose exclusive responsibility for at least a two-year period prior to submission of a certificate of need request has been in the acquisition and interpretation of clinical images. This individual shall have a knowledge of MRI through training, experience, or documented postgraduate education. The individual shall also have training with a functional MRI facility.

2. Qualified engineering personnel, available to the institution during MRI service hours, with training and experience in the operation and maintenance of the MRI equipment.

3. Diagnostic radiologic technologists or other certified technologists with expertise in computed tomography or other cross-sectional imaging methods, at a staffing level consistent with the hospital's expected MRI service volume.

4. Other appropriate physicians shall be available during MRI service hours in clinical specialties such as neurology or neurosurgery, oncology and cardiology.

f. The applicant shall demonstrate how emergencies within the MRI unit will be managed in conformity with accepted medical practice.

203.12(5) *Accessibility and acceptability.* (Iowa Code sections 135.64(1)*"c," "d"*)

a. MRI facilities should have adequate scheduled hours to avoid an excessive backlog of cases and MRI shall be available 24 hours a day, seven days a week on an emergency (on-call) basis.

b. Selection of patients for clinical MRI studies must guarantee equal access to all persons regardless of insurance coverage or ability to pay.

c. In addition to accepting patients from participating institutions, facilities performing clinical MRI procedures shall accept appropriate referrals from other local providers. These patients shall be accommodated to the extent possible by extending the hours of service and by prioritizing patients according to standards of need and appropriateness rather than source of referral.

203.12(6) *Costs and financial feasibility.* (Iowa Code sections 135.64(1*)"e," "f," "i," "p"*)

a. The applicant shall identify capital and operating costs associated with the proposed MRI unit, identify sources of funding to cover those costs, and demonstrate that the project is financially feasible.

b. The applicant shall provide budgets for the first three years of operation, including documentation and justification of all assumptions used.

c. The applicant must document its projected average cost per procedure and charge per procedure for the first three years. Charges for MRI should be reasonably related to service cost, and comparable to MRI charges at other facilities in the state.

d. The applicant shall demonstrate that alternatives were considered and the proposed application is the most cost-effective and will accomplish the goals of the project.

e. To provide a data base for evaluation of subsequent MRI applications by the health facilities council, applicants granted a certificate of need shall provide to the certificate of need office the following data upon request of the Iowa department of public health. The department will request the following data on an annual basis.

1. Total number of procedures performed;
2. Total number of inpatient procedures;
3. Total number of outpatient procedures;
4. Average charge per procedure;
5. Hours of operation of the MRI unit;
6. Total revenues and expenses for the MRI unit for the year.

This rule is intended to implement Iowa Code section 135.64.

641—203.13(135) Positron emission tomography services standards.

203.13(1) *Purpose and scope.*

a. These standards are measures of some of those criteria in Iowa Code sections 135.64(1)*"a"* to *"q."* Criteria which are measured by a standard are cited in parentheses following each standard.

b. Certificate of need applications which are to be evaluated against these standards include:

(1) Proposals to commence or expand the capacity of positron emission tomography services.

(2) Proposals to replace a positron emission tomography unit.

(3) Any other applications which relate to positron emission tomography.

203.13(2) *Definitions.*

"Area" means the community or a metropolitan statistical area (as defined by the U.S. Office of Management and Budget and used by the U.S. Census Bureau).

"CT (computed tomography)" means an imaging method in which a cross-sectional image of the structures in a body plane is reconstructed by a computer program from the X-ray absorption of beams projected through the body in the image plane.

"Cyclotron" means an apparatus for accelerating protons or neutrons to high energies by means of a constant magnet and an oscillating electric field.

"MRI (magnetic resonance imaging)" means a diagnostic modality which employs a combination of magnetic and radio frequency fields and computers to produce images of body organs and tissues.

"Radiopharmaceutical" means a radioactive pharmaceutical used for diagnostic or therapeutic purposes.

"PET procedure" means an image-scanning sequence derived from a single administration of PET, equated with a single injection of the tracer.

"Positron emission tomography (PET)" means an imaging method in which positron-emitting radionuclides, which are produced either by a cyclotron or generator, and a nuclear camera are used to create pictures of organ function rather than structure. PET installations generally take one of two forms: a PET scanner using only generator-produced tracers (basic PET unit), or a PET scanner with a cyclotron (enhanced PET unit).

"SPECT (single photon emission computed tomography)" means a camera-based imaging system using the radionuclides in the routine practice of nuclear medicine.

203.13(3) *Availability and need.* (Iowa Code sections 135.64(1)*"c," "d," "e," "g," "h"*)

a. Applicants in areas with no other basic or enhanced PET units.

(1) Applicants should demonstrate a reasonable potential utilization of a PET unit based on diversified inpatient and outpatient case mix thresholds including:

1. Intracranial cases

- Primary brain tumors 50/year
- Metastasis 100/year
- Cerebral vascular disease 200/year
- Organic brain disease and dementia/psychiatric diagnoses (including epilepsy-seizure disorders) 500/year
- Spinal 100/year

2. Cardiovascular cases

- Ischemic heart disease (including acute and chronic infarction) 1200/year

3. Neoplasms (head, neck, thorax (excluding heart), abdomen, pelvic and musculoskeletal 1300/year

4. If the application is for a basic unit, the above case mix and numbers should be adjusted according to the proposed use of the unit.

(2) Applicants should have other diagnostic capabilities, on-site or through referral arrangements, with appropriate volumes including:

	Proposed Threshold
Nuclear medicine imaging services	7,000
Single photon emission computed tomography (including brain, bone, liver, Gallium and Thallium stress)	2,000
CT	10,000
MRI	3,000
Cardiac angiography	1,500
Cardiac ultrasound	7,000

(3) Applicants must demonstrate secondary and tertiary service capability, on-site or through referral arrangements, including cardiac surgery, cardiology, internal medicine, general surgery, hematology/oncology, neurology, pathology, thoracic surgery and psychiatry.

b. Applicants in areas with one or more basic or enhanced PET units currently in operation or approved by the certificate of need program for operation.

(1) Applicant should have access to cyclotron-produced radiopharmaceuticals.

(2) Existing PET units within the area (whether basic or enhanced) must have been operating at a minimum of 1000 PET procedures during the most recent annual period as reported to the certificate of need program according to 203.13(6)*"e."*

c. The provisions of subrule 203.13(3) shall be effective until June 30, 1995. Prior to that time the Iowa department of public health shall reconvene a task force to recommend continuing use of the need methodology outlined or develop a new or revised methodology to use in projecting future PET needs. The department shall promulgate a new subrule 203.13(3) accordingly.

203.13(4) *Quality and continuity.* (Iowa Code sections 135.64(1)*"g," "h," "i," "k"*)

a. The proposed PET unit must function as a component of a comprehensive inpatient or outpatient diagnostic service. The proposed PET unit must have the following modalities (and capabilities) on-site or through referral arrangements:

(1) Computed tomography — (whole body)

(2) Magnetic resonance imaging — (brain and whole body)

(3) Nuclear medicine — (cardiac, SPECT)

(4) Conventional radiography

b. The proposed PET unit must be located in a facility which has, either in-house or through referral arrangement, the resources necessary to treat most of the conditions diagnosed or confirmed by PET. The following medical specialties must be available during PET service hours on-site or by referral arrangements: cardiology, neurology, neurosurgery, oncology, and psychiatry.

c. A proposal to provide new or expanded PET must include satisfactory assurances that services will be offered in a physical environment that conforms to federal standards, manufacturer's specifications, and licensing agencies' requirements. The following areas are to be addressed:

(1) Quality control and assurance of radiopharmaceutical production of generator or cyclotron-produced agents;

(2) Quality control and assurance of PET tomograph and associated instrumentation;

(3) Radiation protection and shielding;

(4) Radioactive emissions to the environment.

d. The applicant must provide evidence that the proposed PET equipment has been certified for clinical use by the U.S. Food and Drug Administration or will be operated under an institutional review board whose membership is consistent with U.S. Department of Health and Human Services regulations.

e. Applicants for PET shall document that the necessary qualified staff are available to operate the proposed unit. The applicants shall document the PET training and experience of the staff. The following minimum staff shall be available to the PET unit:

(1) One or more nuclear medicine imaging physician(s) available on a full-time basis to the PET unit who have been licensed by the state for the handling of medical radionuclides and whose primary responsibility for at least a one-year period prior to submission of the certificate of need application has been in acquisition and interpretation of tomographic images. This individual shall have knowledge of PET through training, experience, or documented postgraduate education. The individual shall also have training with a functional PET facility.

(2) Qualified PET radiochemist or radiopharmacist personnel, available to the facility during PET service hours, with at least one year of training and experience in the synthesis of short-lived positron-emitting radiopharmaceuticals. The individual(s) shall have experience in the testing of chemical, radiochemical, and radionuclidic purity of PET radiopharmaceutical syntheses.

(3) Qualified engineering and physics personnel, available to the facility during PET service hours, with training and experience in the operation and maintenance of the PET equipment.

(4) Qualified radiation safety personnel, available to the facility at all times, with training and experience in the handling of short-lived positron-emitting nuclides.

(5) Certified nuclear medicine technologists with expertise in computed tomographic nuclear medicine imaging procedures, at a staffing level consistent with the proposed center's expected PET service volume.

(6) Other appropriate physicians shall be available during PET service hours which may include certified nuclear medicine technologists, computer programmers, nurses, and radiochemistry technicians.

f. The applicant shall demonstrate how emergencies within the PET unit will be managed in conformity with accepted medical practice.

203.13(5) *Accessibility and acceptability.* (Iowa Code sections 135.64(1)*"c," "d"*)

a. PET facilities should have adequate scheduled hours to avoid an excessive backlog of cases.

b. Selection of patients for clinical PET studies must guarantee equal access to all persons regardless of insurance coverage or ability to pay.

c. In addition to accepting patients from participating institutions, facilities performing clinical PET procedures shall accept appropriate referrals from other local providers. These patients shall be accommodated to the extent possible by extending the hours of service and by prioritizing patients according to standards of need and appropriateness rather than source of referral.

203.13(6) *Costs and financial feasibility.* (Iowa Code sections 135.64(1)*"e," "f," "i," "p"*)

a. The applicant shall identify capital and operating costs associated with the proposed PET unit, identify sources of funding to cover those costs, and demonstrate that the project is financially feasible.

b. The applicant shall provide budgets for the first three years of operation, including documentation and justification of all assumptions used.

c. The applicant must document its projected average cost per procedure and charge per procedure for the first three years. Charges for PET should be reasonably related to service cost and comparable to PET charges at other facilities in the state.

d. The applicant shall verify whether the service is eligible for reimbursement by public and private third-party payers.

e. The applicant shall demonstrate that alternatives were considered and the proposed application is the most cost-effective and will accomplish the goals of the project.

f. To provide a data base for evaluation of subsequent PET applications by the health facilities council, applicants granted a certificate of need shall provide to the certificate of need office the following data upon request of the Iowa department of public health. The department will request the following data on an annual basis.

(1) Total number of procedures performed;
(2) Total number of inpatient procedures (indicate type of procedure);
(3) Total number of outpatient procedures (indicate type of procedure);
(4) Average charge per specific procedure;
(5) Hours of operation of the PET unit;
(6) Total revenues and expenses for the PET unit for the year.

This rule is intended to implement Iowa Code section 135.64.

[Filed emergency 7/26/78—published 8/23/78, effective 7/26/78]
[Filed 2/1/80, Notice 8/8/79—published 2/20/80, effective 3/26/80]
[Filed 6/6/80, Notice 2/6/80—published 6/25/80, effective 7/30/80]
[Filed emergency 9/10/80—published 10/1/80, effective 9/10/80]
[Filed emergency 11/7/80—published 11/26/80, effective 11/7/80]
[Filed 12/5/80, Notice 10/15/80—published 12/24/80, effective 1/28/81]
[Filed emergency 4/9/81—published 4/29/81, effective 4/10/81]
[Filed 6/2/81, Notice 4/15/81—published 6/24/81, effective 8/1/81]
[Filed 3/22/84, Notice 12/7/83—published 4/11/84, effective 5/16/84]
[Filed 11/14/85, Notice 9/25/85—published 12/4/85, effective 1/8/86]
[Filed 3/20/86, Notice 1/29/86—published 4/9/86, effective 5/16/86]
[Filed 5/15/87, Notice 3/11/87—published 6/3/87, effective 7/8/87]
[Filed emergency 7/10/87—published 7/29/87, effective 7/10/87]
[Filed 5/11/90, Notice 3/7/90—published 5/30/90, effective 7/4/90]

[Prior to 7/29/87, Health Department[470]Ch204]

CHAPTER 204
UNIFORM REPORTING REQUIREMENTS

[Prior to 7/29/87, Health Department[470]Ch204]

Rescinded **ARC 1748C**, IAB 12/10/14, effective 1/14/15

CHAPTER 205
Reserved

CHAPTER 206
IOWA HEALTH INFORMATION NETWORK

641—206.1(135) Scope and applicability. This chapter describes how the department will address issues regarding the Iowa health information network, including: the development of policies and procedures for auditing participants' usage of the Iowa health information network and enforcing compliance with applicable standards, requirements, rules and procedures; the process by which individuals can decline to have their health information shared through the Iowa health information network; and the process by which the department will notify individuals if there has been unauthorized access to or disclosure of their protected health information through the Iowa health information network.
[**ARC 1405C**, IAB 4/2/14, effective 5/7/14]

641—206.2(135) Definitions. For the purposes of this chapter, the following definitions shall apply:

"Advisory council" means the electronic health information advisory council established in Iowa Code section 135.156(2)*"a."*

"Board" means the state board of health established in Iowa Code chapter 136.

"Breach" means breach as such term is defined in the HIPAA Privacy Rule.

"Department" means the Iowa department of public health.

"Executive committee" means the executive committee of the electronic health information advisory council established in Iowa Code section 135.156(2)*"b."*

"HIPAA" means the administrative simplification provisions of the Health Insurance Portability and Accountability Act of 1996, as amended by the HITECH Act, and the regulations promulgated thereunder, including the Privacy Rule, the Security Rule and the Omnibus Final Rule.

"Individual" means a patient or client of a participant.

"Iowa health information network" means the health information exchange operated by the department pursuant to Iowa Code section 135.155.

"Opt out" means to decline to have one's health information exchanged through the Iowa health information network.

"Participant" means an authorized organization or individual that has voluntarily agreed to enter into a participation agreement to access or use the Iowa health information network.

"Participation agreement" means the agreement that is entered into between the department and a participant and prescribes the terms and conditions for access and use of the Iowa health information network.

"Privacy policies and security policies" means the department's rules, regulations, policies and procedures for access to and use of the Iowa health information network, as approved and amended by the executive committee and advisory council and the board, that are posted electronically on the Iowa health information network Web site or otherwise furnished to participants.

"Protected health information" means protected health information as defined in HIPAA that is created, transmitted or received by an authorized participant.

"Provider" means a person or organization that is a health care provider under HIPAA and is licensed or otherwise permitted to provide health care items and services under applicable state law.

"Security incident" means the attempted or successful unauthorized access, use, disclosure, modification, or destruction of information available through the Iowa health information network or interference with Iowa health information network operations, including attempted and successful privacy breaches.
[**ARC 1405C**, IAB 4/2/14, effective 5/7/14]

641—206.3(135) Policy development and governance. The department is required to develop and implement the privacy policies and security policies to protect protected health information exchanged through the Iowa health information network. The policies must be reviewed by the executive committee

and advisory council and approved by the board prior to implementation. Any changes to the policies must go through the same review and approval process.
[**ARC 1405C**, IAB 4/2/14, effective 5/7/14]

641—206.4(135) Monitoring and audit. The department shall monitor and audit participant usage of the Iowa health information network in a manner consistent with the privacy policies and security policies.

206.4(1) The department shall enforce the privacy policies and security policies, which shall include audit and monitoring requirements for participants.

206.4(2) Participant monitoring and audit activity requirements shall be included in the participation agreement. Participants unwilling or unable to abide by the requirements and participants that violate the policies or terms of the participation agreement may face sanctions up to and including suspension or termination of the participation agreement.
[**ARC 1405C**, IAB 4/2/14, effective 5/7/14]

641—206.5(135) Consumer participation in the Iowa health information network. Pursuant to Iowa Code section 135.156E(2), consumers have the opportunity to opt out of participation in the Iowa health information network.

206.5(1) The department shall explain the process and provide forms for patients to complete in order to opt out of participation in the Iowa health information network. The information shall be made available in places including, but not limited to, provider offices and on the Iowa health information network Web site.

206.5(2) Patients who decline to have their health information shared through the Iowa health information network may later choose to have their information shared by providing verification of identity.
[**ARC 1405C**, IAB 4/2/14, effective 5/7/14]

641—206.6(135) Security incidents, breaches.

206.6(1) The department and all participants shall promptly investigate, respond to and report privacy breaches related to the Iowa health information network in compliance with applicable federal and state law.

206.6(2) The department shall include in the privacy policies and security policies more detailed requirements regarding security incidents and shall develop a security incident response plan identifying the responsible parties and action steps to be taken in the event of a security incident.
[**ARC 1405C**, IAB 4/2/14, effective 5/7/14]

641—206.7(135) Health information audit. The department shall make available upon request and on the Iowa health information network Web site a form for individuals to request an audit report showing who or what system has accessed their health information through the Iowa health information network.

206.7(1) Individuals may request an audit report by contacting the department by:

Mail: Office of Health IT
Iowa Department of Public Health
Lucas State Office Building
321 E. 12th Street
Des Moines, Iowa 50319

Fax: (515)281-4958

E-mail: ehealth@idph.state.ia.us

The department may require proof of legal authority to view health information records.

206.7(2) The department shall process the health information audit request and provide a response to the individual within 30 days of receipt of the request.
[**ARC 1405C**, IAB 4/2/14, effective 5/7/14]

These rules are intended to implement Iowa Code sections 135.156E(2) and 135.156E(9).

[Filed ARC 1405C (Notice ARC 1315C, IAB 2/5/14), IAB 4/2/14, effective 5/7/14]